System Check_Head_750MHz

DUT: D750V3-1107

Communication System: CW; Frequency: 750 MHz;Duty Cycle: 1:1
Medium: HSL_750_200526 Medium parameters used: f = 750 MHz; σ = 0.899 S/m; ε_r = 41.016; ρ = 1000 kg/m^3
Ambient Temperature：23.2 ℃; Liquid Temperature：22.2 ℃

DASY5 Configuration:
- Probe: EX3DV4 - SN7590;ConvF(11.05, 11.05, 11.05) @ 750 MHz;Calibrated: 2020/4/14
- Sensor-Surface: 1.4mm (Mechanical Surface Detection)
- Electronics: DAE4 Sn913; Calibrated: 2020/5/6
- Phantom: SAM_Left; Type: QD000P40CD; Serial: TP:1801
- Measurement SW: DASY52, Version 52.10 (4);SEMCAD X Version 14.6.14 (7483)

Pin=250mW/Area Scan (61x61x1): Interpolated grid: dx=1.500 mm, dy=1.500 mm
Maximum value of SAR (interpolated) = 2.50 W/kg

Pin=250mW/Zoom Scan (5x5x7)/Cube 0: Measurement grid: dx=8mm, dy=8mm, dz=5mm
Reference Value = 51.30 V/m; Power Drift = 0.01 dB
Peak SAR (extrapolated) = 3.28 W/kg
SAR(1 g) = 2.15 W/kg; SAR(10 g) = 1.44 W/kg
Maximum value of SAR (measured) = 2.50 W/kg

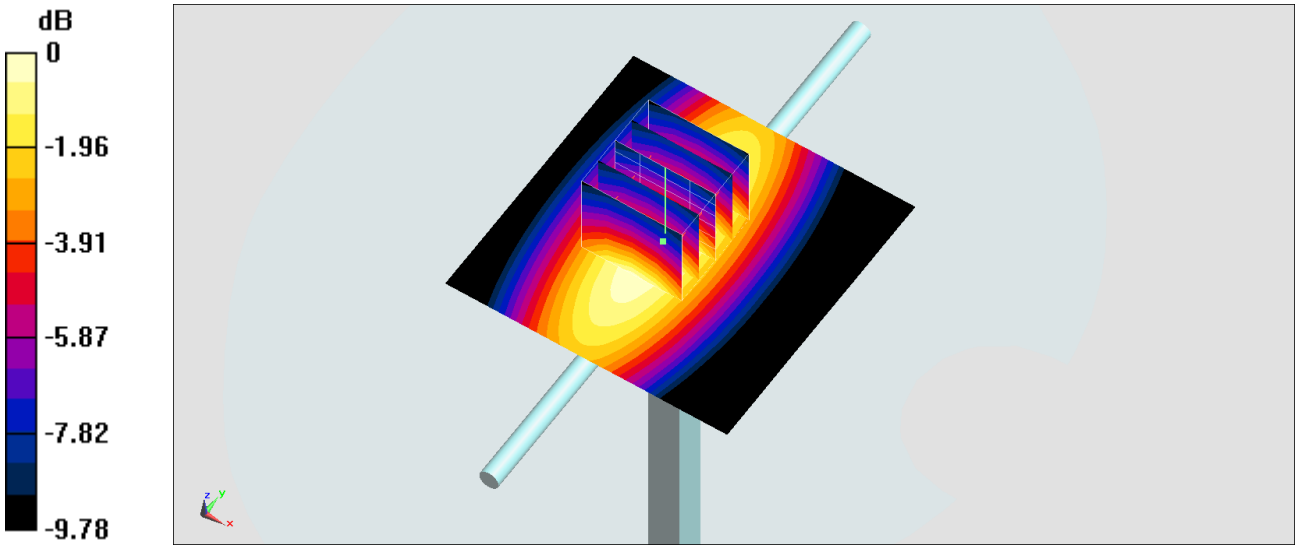

0 dB = 2.50 W/kg = 3.98 dBW/kg

System Check_Head_750MHz

DUT: D750V3-1107

Communication System: CW; Frequency: 750 MHz;Duty Cycle: 1:1
Medium: HSL_750_200527 Medium parameters used: f = 750 MHz; σ = 0.895 S/m; ε_r = 43.476; ρ = 1000 kg/m^3
Ambient Temperature：23.6 ℃; Liquid Temperature：22.6 ℃

DASY5 Configuration:
- Probe: EX3DV4 - SN7590;ConvF(11.05, 11.05, 11.05) @ 750 MHz;Calibrated: 2020/4/14
- Sensor-Surface: 1.4mm (Mechanical Surface Detection)
- Electronics: DAE4 Sn913; Calibrated: 2020/5/6
- Phantom: SAM_Left; Type: QD000P40CD; Serial: TP:1801
- Measurement SW: DASY52, Version 52.10 (4);SEMCAD X Version 14.6.14 (7483)

Pin=250mW/Area Scan (61x61x1): Interpolated grid: dx=1.500 mm, dy=1.500 mm
Maximum value of SAR (interpolated) = 2.82 W/kg

Pin=250mW/Zoom Scan (5x5x7)/Cube 0: Measurement grid: dx=8mm, dy=8mm, dz=5mm
Reference Value = 57.72 V/m; Power Drift = -0.00 dB
Peak SAR (extrapolated) = 3.72 W/kg
SAR(1 g) = 2.13 W/kg; SAR(10 g) = 1.38 W/kg
Maximum value of SAR (measured) = 2.83 W/kg

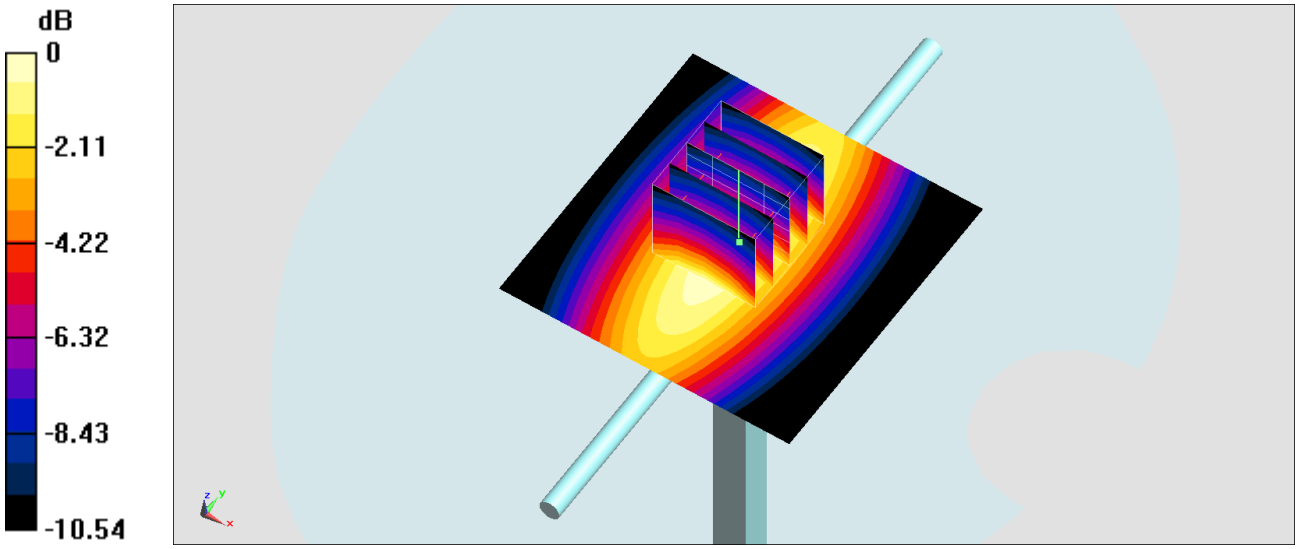

0 dB = 2.83 W/kg = 4.52 dBW/kg

System Check_Head_750MHz

DUT: D750V3-1107

Communication System: CW; Frequency: 750 MHz;Duty Cycle: 1:1
Medium: HSL_750_200608 Medium parameters used: f = 750 MHz; σ = 0.896 S/m; ε_r = 43.596; ρ = 1000 kg/m^3
Ambient Temperature：23.6 ℃; Liquid Temperature：22.6 ℃

DASY5 Configuration:
- Probe: EX3DV4 - SN7590; ConvF(11.05, 11.05, 11.05) @ 750 MHz; Calibrated: 2020/4/14
- Sensor-Surface: 1.4mm (Mechanical Surface Detection)
- Electronics: DAE4 Sn913; Calibrated: 2020/5/6
- Phantom: SAM_Left; Type: QD000P40CD; Serial: TP:1815
- Measurement SW: DASY52, Version 52.10 (4);SEMCAD X Version 14.6.14 (7483)

Pin=50mW/Area Scan (61x61x1): Interpolated grid: dx=1.500 mm, dy=1.500 mm
Maximum value of SAR (interpolated) = 0.490 W/kg

Pin=50mW/Zoom Scan (5x5x7)/Cube 0: Measurement grid: dx=8mm, dy=8mm, dz=5mm
Reference Value = 24.74 V/m; Power Drift = 0.03 dB
Peak SAR (extrapolated) = 0.561 W/kg
SAR(1 g) = 0.407 W/kg; SAR(10 g) = 0.269 W/kg
Maximum value of SAR (measured) = 0.499 W/kg

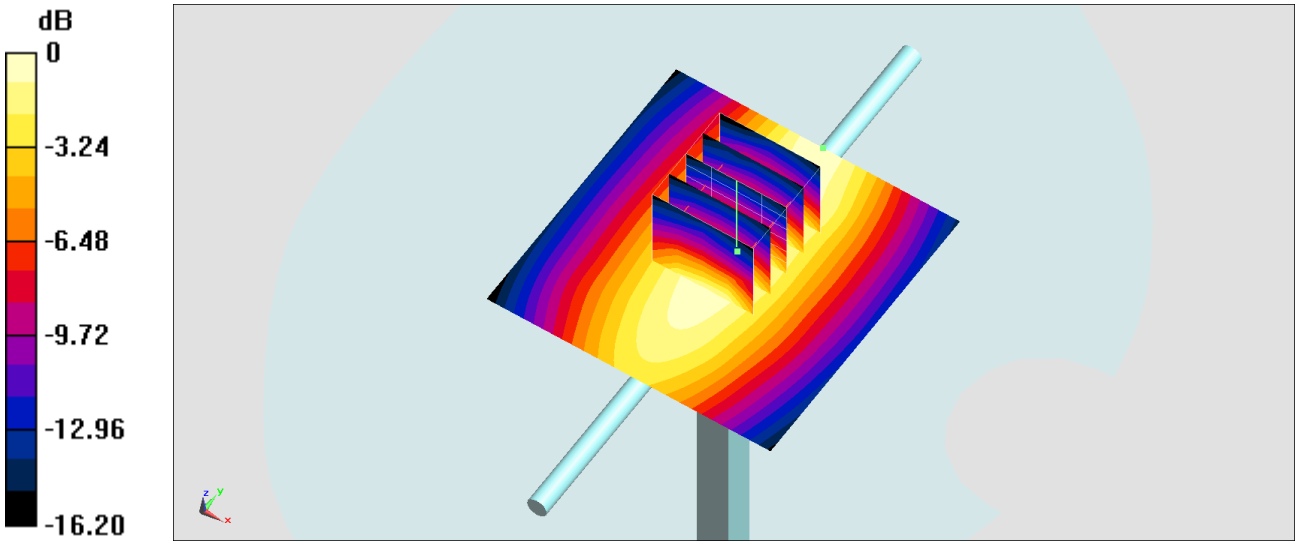

0 dB = 0.490 W/kg = -3.10 dBW/kg

System Check_Head_750MHz

DUT: D750V3-1107

Communication System: CW; Frequency: 750 MHz;Duty Cycle: 1:1
Medium: HSL_750_200610 Medium parameters used: f = 750 MHz; σ = 0.925 S/m; ε_r = 43.261; ρ = 1000 kg/m^3
Ambient Temperature：23.3 ℃; Liquid Temperature：22.3 ℃

DASY5 Configuration:
- Probe: EX3DV4 - SN7590; ConvF(11.05, 11.05, 11.05) @ 750 MHz; Calibrated: 2020/4/14
- Sensor-Surface: 1.4mm (Mechanical Surface Detection)
- Electronics: DAE4 Sn913; Calibrated: 2020/5/6
- Phantom: SAM_Left; Type: QD000P40CD; Serial: TP:1815
- Measurement SW: DASY52, Version 52.10 (4);SEMCAD X Version 14.6.14 (7483)

Pin=50mW/Area Scan (61x61x1): Interpolated grid: dx=1.500 mm, dy=1.500 mm
Maximum value of SAR (interpolated) = 0.506 W/kg

Pin=50mW/Zoom Scan (5x5x7)/Cube 0: Measurement grid: dx=8mm, dy=8mm, dz=5mm
Reference Value = 24.74 V/m; Power Drift = 0.03 dB
Peak SAR (extrapolated) = 0.579 W/kg
SAR(1 g) = 0.389 W/kg; SAR(10 g) = 0.258 W/kg
Maximum value of SAR (measured) = 0.515 W/kg

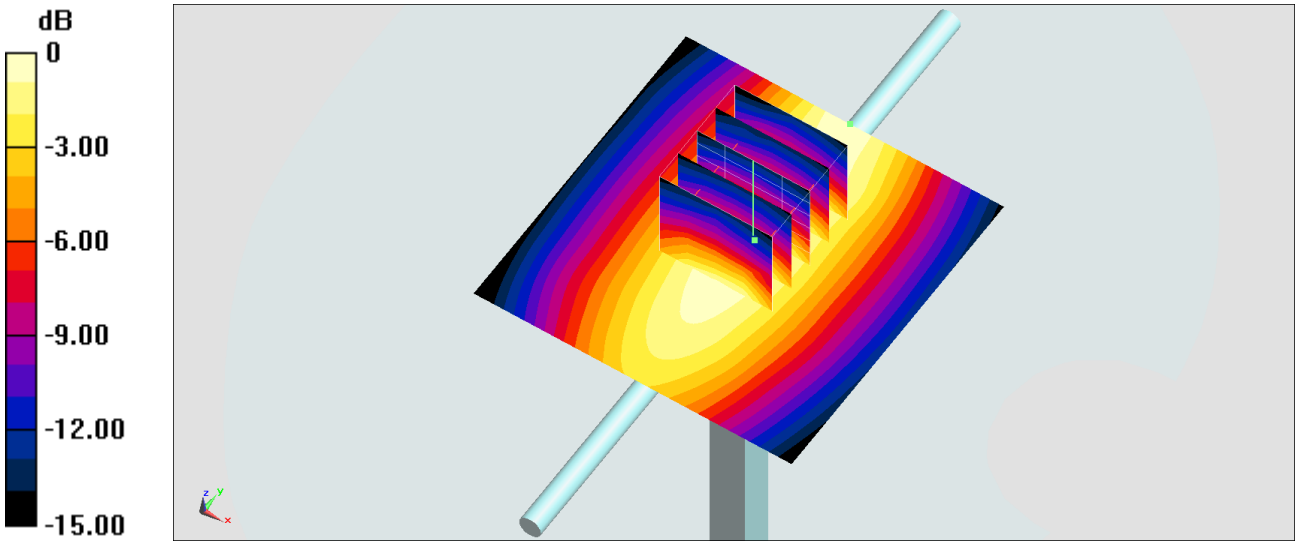

0 dB = 0.506 W/kg = -2.96 dBW/kg

System Check_Head_750MHz

DUT: D750V3-1107

Communication System: CW; Frequency: 750 MHz;Duty Cycle: 1:1
Medium: HSL_750_200618 Medium parameters used: f = 750 MHz; σ = 0.886 S/m; ε_r = 42.774; ρ = 1000 kg/m^3
Ambient Temperature：23.3 ℃; Liquid Temperature：22.3 ℃

DASY5 Configuration:
- Probe: EX3DV4 - SN7590; ConvF(11.05, 11.05, 11.05) @ 750 MHz; Calibrated: 2020/4/14
- Sensor-Surface: 1.4mm (Mechanical Surface Detection)
- Electronics: DAE4 Sn913; Calibrated: 2020/5/6
- Phantom: SAM_Left; Type: QD000P40CD; Serial: TP:1815
- Measurement SW: DASY52, Version 52.10 (4);SEMCAD X Version 14.6.14 (7483)

Pin=50mW/Area Scan (61x61x1): Interpolated grid: dx=1.500 mm, dy=1.500 mm
Maximum value of SAR (interpolated) = 0.489 W/kg

Pin=50mW/Zoom Scan (5x5x7)/Cube 0: Measurement grid: dx=8mm, dy=8mm, dz=5mm
Reference Value = 24.78 V/m; Power Drift = -0.07 dB
Peak SAR (extrapolated) = 0.603 W/kg
SAR(1 g) = 0.394 W/kg; SAR(10 g) = 0.254 W/kg
Maximum value of SAR (measured) = 0.535 W/kg

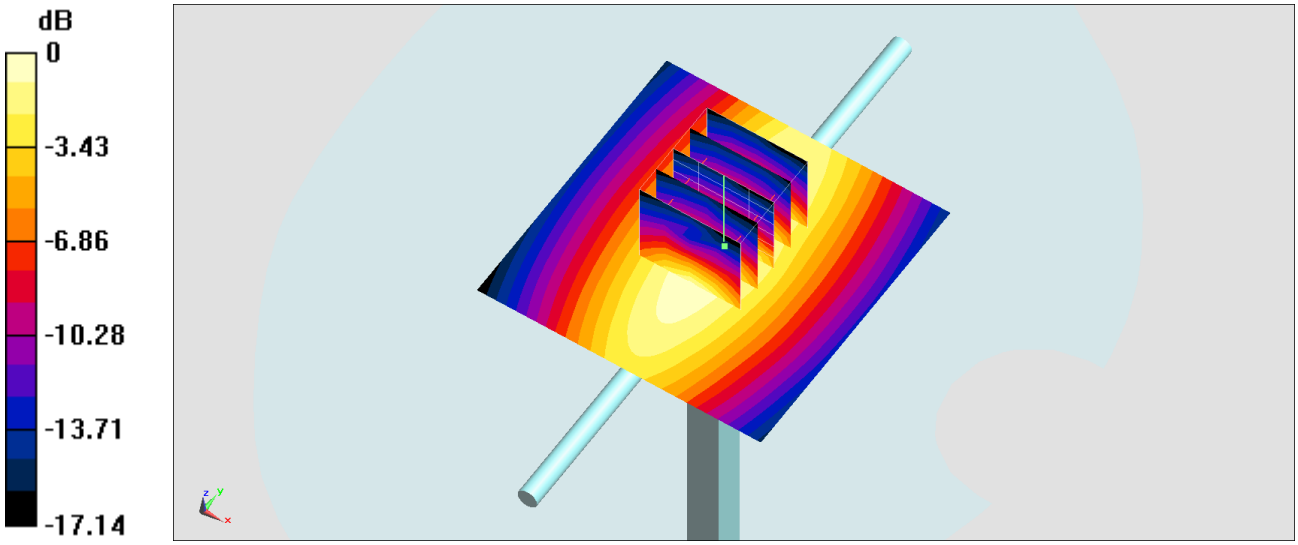

0 dB = 0.489 W/kg = -3.11 dBW/kg

System Check_Head_750MHz

DUT: D750V3-1107

Communication System: CW; Frequency: 750 MHz;Duty Cycle: 1:1
Medium: HSL_750_200620 Medium parameters used: f = 750 MHz; σ = 0.900 S/m; ε_r = 43.706; ρ = 1000 kg/m^3
Ambient Temperature：23.7 ℃; Liquid Temperature：22.7 ℃

DASY5 Configuration:
- Probe: EX3DV4 - SN7590; ConvF(11.05, 11.05, 11.05) @ 750 MHz; Calibrated: 2020/4/14
- Sensor-Surface: 1.4mm (Mechanical Surface Detection)
- Electronics: DAE4 Sn913; Calibrated: 2020/5/6
- Phantom: SAM_Left; Type: QD000P40CD; Serial: TP:1815
- Measurement SW: DASY52, Version 52.10 (4);SEMCAD X Version 14.6.14 (7483)

Pin=250mW/Area Scan (61x61x1): Interpolated grid: dx=1.500 mm, dy=1.500 mm
Maximum value of SAR (interpolated) = 2.84 W/kg

Pin=250mW/Zoom Scan (5x5x7)/Cube 0: Measurement grid: dx=8mm, dy=8mm, dz=5mm
Reference Value = 57.72 V/m; Power Drift = -0.00 dB
Peak SAR (extrapolated) = 3.74 W/kg
SAR(1 g) = 2.14 W/kg; SAR(10 g) = 1.39 W/kg
Maximum value of SAR (measured) = 2.84 W/kg

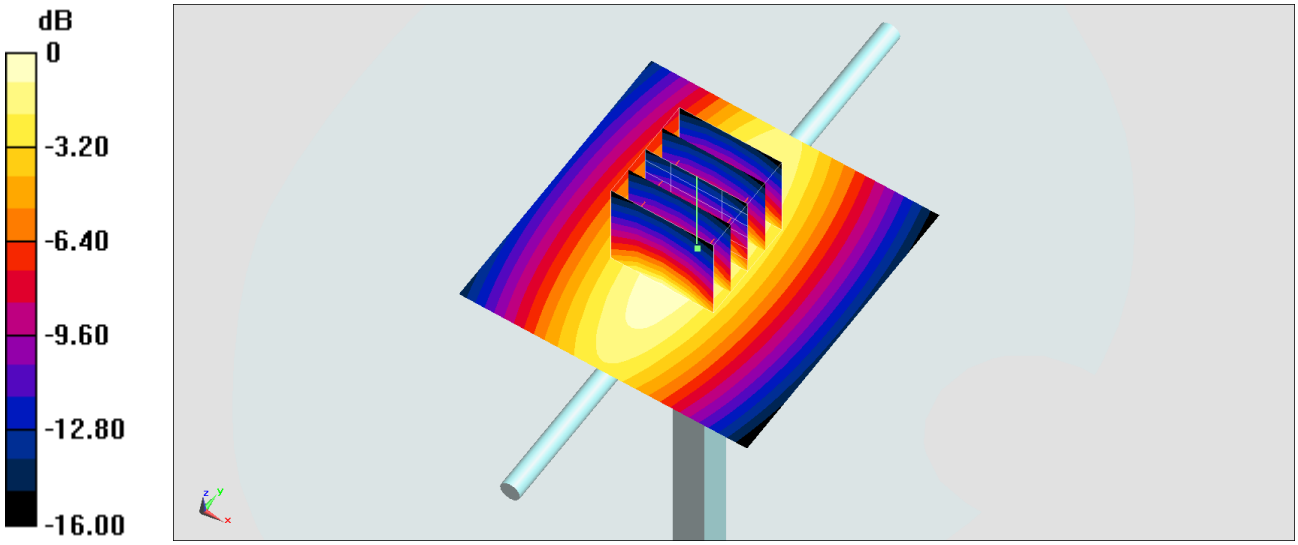

0 dB = 2.84 W/kg = 4.53 dBW/kg

System Check_Head_750MHz

DUT: D750V3-1107

Communication System: CW; Frequency: 750 MHz;Duty Cycle: 1:1
Medium: HSL_750_200630 Medium parameters used: f = 750 MHz; σ = 0.912 S/m; ε_r = 43.875; ρ = 1000 kg/m^3
Ambient Temperature：23.6 ℃; Liquid Temperature：22.6 ℃

DASY5 Configuration:
- Probe: EX3DV4 - SN7590; ConvF(11.05, 11.05, 11.05) @ 750 MHz; Calibrated: 2020/4/14
- Sensor-Surface: 1.4mm (Mechanical Surface Detection)
- Electronics: DAE3 Sn495; Calibrated: 2020/6/4
- Phantom: SAM_Left; Type: QD000P40CD; Serial: TP:1815
- Measurement SW: DASY52, Version 52.10 (4);SEMCAD X Version 14.6.14 (7483)

Pin=50mW/Area Scan (61x61x1): Interpolated grid: dx=1.500 mm, dy=1.500 mm
Maximum value of SAR (interpolated) = 0.507 W/kg

Pin=50mW/Zoom Scan (5x5x7)/Cube 0: Measurement grid: dx=8mm, dy=8mm, dz=5mm
Reference Value = 24.61 V/m; Power Drift = 0.03 dB
Peak SAR (extrapolated) = 0.565 W/kg
SAR(1 g) = 0.39 W/kg; SAR(10 g) = 0.258 W/kg
Maximum value of SAR (measured) = 0.517 W/kg

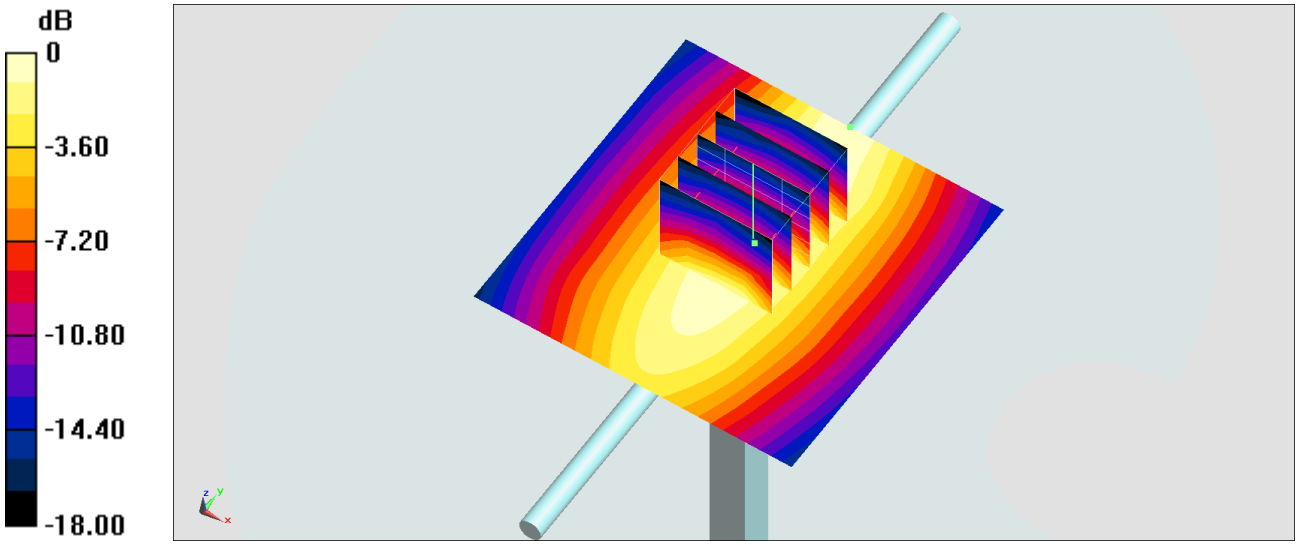

0 dB = 0.502 W/kg = -2.87 dBW/kg

System Check_Head_835MHz

DUT: D835V2-4d167

Communication System: CW; Frequency: 835 MHz;Duty Cycle: 1:1
Medium: HSL_850_200525 Medium parameters used: f = 835 MHz; σ = 0.901 S/m; ε_r = 42.449; ρ = 1000 kg/m^3
Ambient Temperature：23.2 ℃; Liquid Temperature：22.2 ℃

DASY5 Configuration:
- Probe: EX3DV4 - SN7590;ConvF(10.63, 10.63, 10.63) @ 835 MHz;Calibrated: 2020/4/14
- Sensor-Surface: 1.4mm (Mechanical Surface Detection)
- Electronics: DAE4 Sn913; Calibrated: 2020/5/6
- Phantom: SAM_Left; Type: QD000P40CD; Serial: TP:1801
- Measurement SW: DASY52, Version 52.10 (4);SEMCAD X Version 14.6.14 (7483)

Pin=250mW/Area Scan (61x61x1): Interpolated grid: dx=1.500 mm, dy=1.500 mm
Maximum value of SAR (interpolated) = 2.88 W/kg

Pin=250mW/Zoom Scan (5x5x7)/Cube 0: Measurement grid: dx=8mm, dy=8mm, dz=5mm
Reference Value = 56.88 V/m; Power Drift = 0.01 dB
Peak SAR (extrapolated) = 3.84 W/kg
SAR(1 g) = 2.44 W/kg; SAR(10 g) = 1.6 W/kg
Maximum value of SAR (measured) = 2.85 W/kg

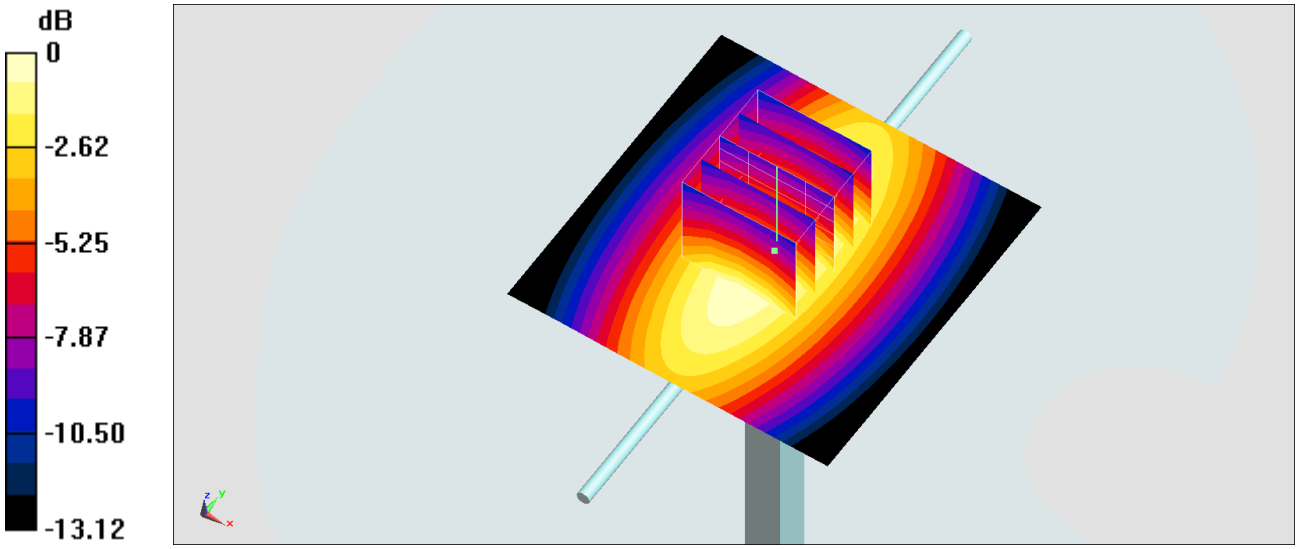

0 dB = 2.85 W/kg = 4.55 dBW/kg

System Check_Head_835MHz

DUT: D835V2-4d167

Communication System: CW; Frequency: 835 MHz;Duty Cycle: 1:1
Medium: HSL_850_200527 Medium parameters used: f = 835 MHz; σ = 0.884 S/m; ε_r = 41.766; ρ = 1000 kg/m^3
Ambient Temperature：23.6 ℃; Liquid Temperature：22.6 ℃

DASY5 Configuration:
- Probe: EX3DV4 - SN7590;ConvF(10.63, 10.63, 10.63) @ 835 MHz;Calibrated: 2020/4/14
- Sensor-Surface: 1.4mm (Mechanical Surface Detection)
- Electronics: DAE4 Sn913; Calibrated: 2020/5/6
- Phantom: SAM_Left; Type: QD000P40CD; Serial: TP:1801
- Measurement SW: DASY52, Version 52.10 (4);SEMCAD X Version 14.6.14 (7483)

Pin=250mW/Area Scan (61x61x1): Interpolated grid: dx=1.500 mm, dy=1.500 mm
Maximum value of SAR (interpolated) = 2.83 W/kg

Pin=250mW/Zoom Scan (5x5x7)/Cube 0: Measurement grid: dx=8mm, dy=8mm, dz=5mm
Reference Value = 56.88 V/m; Power Drift = 0.01 dB
Peak SAR (extrapolated) = 3.77 W/kg
SAR(1 g) = 2.39 W/kg; SAR(10 g) = 1.56 W/kg
Maximum value of SAR (measured) = 2.80 W/kg

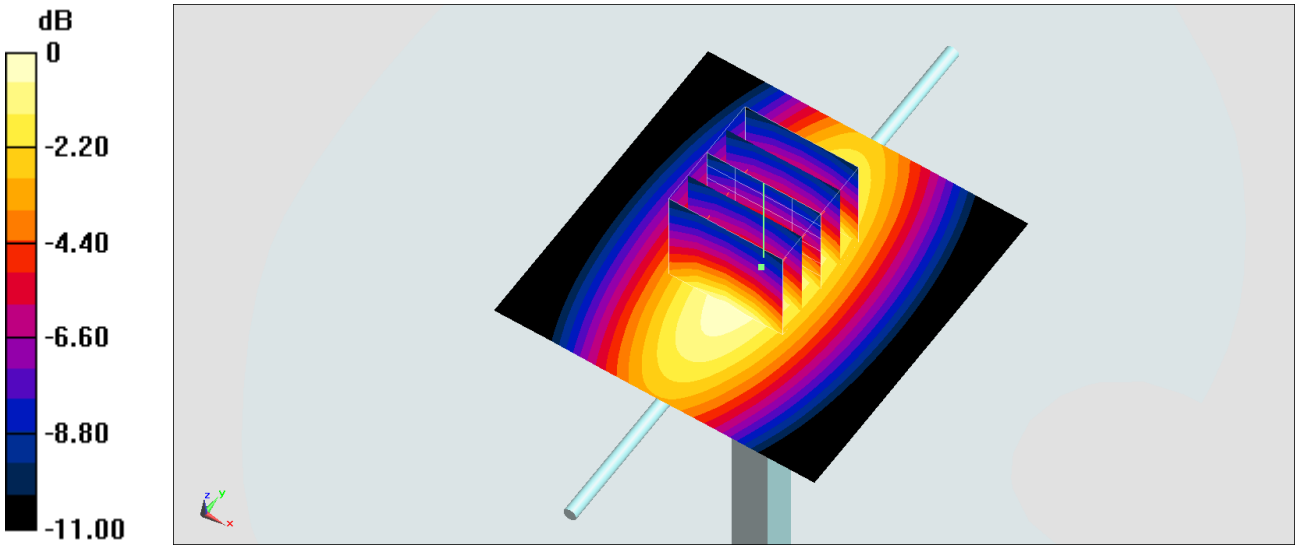

0 dB = 2.80 W/kg = 4.47 dBW/kg

System Check_Head_835MHz

DUT: D835V2-4d167

Communication System: CW; Frequency: 835 MHz;Duty Cycle: 1:1
Medium: HSL_850_200608 Medium parameters used: f = 835 MHz; σ = 0.931 S/m; ε_r = 43.3; ρ = 1000 kg/m^3
Ambient Temperature：23.6 ℃; Liquid Temperature：22.6 ℃

DASY5 Configuration:
- Probe: EX3DV4 - SN7590; ConvF(10.63, 10.63, 10.63) @ 835 MHz; Calibrated: 2020/4/14
- Sensor-Surface: 1.4mm (Mechanical Surface Detection)
- Electronics: DAE4 Sn913; Calibrated: 2020/5/6
- Phantom: SAM_Left; Type: QD000P40CD; Serial: TP:1815
- Measurement SW: DASY52, Version 52.10 (4);SEMCAD X Version 14.6.14 (7483)

Pin=250mW/Area Scan (61x61x1): Interpolated grid: dx=1.500 mm, dy=1.500 mm
Maximum value of SAR (interpolated) = 2.98 W/kg

Pin=250mW/Zoom Scan (5x5x7)/Cube 0: Measurement grid: dx=8mm, dy=8mm, dz=5mm
Reference Value = 56.88 V/m; Power Drift = 0.03 dB
Peak SAR (extrapolated) = 3.97 W/kg
SAR(1 g) = 2.52 W/kg; SAR(10 g) = 1.65 W/kg
Maximum value of SAR (measured) = 2.95 W/kg

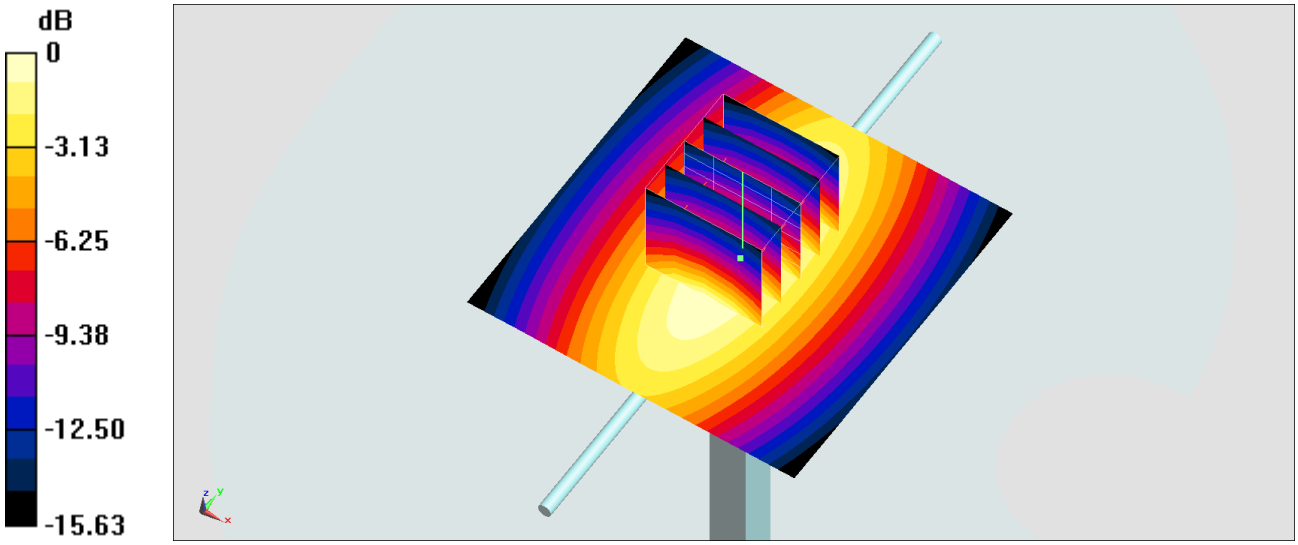

0 dB = 2.98 W/kg = 4.74 dBW/kg

System Check_Head_835MHz

DUT: D835V2-4d167

Communication System: CW; Frequency: 835 MHz;Duty Cycle: 1:1
Medium: HSL_835_200621 Medium parameters used: f = 835 MHz; σ = 0.926 S/m; ε_r = 42.88; ρ = 1000 kg/m^3
Ambient Temperature：23.5 ℃; Liquid Temperature：22.5 ℃

DASY5 Configuration:
- Probe: EX3DV4 - SN7590; ConvF(10.63, 10.63, 10.63) @ 835 MHz; Calibrated: 2020/4/14
- Sensor-Surface: 1.4mm (Mechanical Surface Detection)
- Electronics: DAE4 Sn913; Calibrated: 2020/5/6
- Phantom: SAM_Left; Type: QD000P40CD; Serial: TP:1815
- Measurement SW: DASY52, Version 52.10 (4);SEMCAD X Version 14.6.14 (7483)

Pin=250mW/Area Scan (61x61x1): Interpolated grid: dx=1.500 mm, dy=1.500 mm
Maximum value of SAR (interpolated) = 2.96 W/kg

Pin=250mW/Zoom Scan (5x5x7)/Cube 0: Measurement grid: dx=8mm, dy=8mm, dz=5mm
Reference Value = 56.88 V/m; Power Drift = 0.01 dB
Peak SAR (extrapolated) = 3.95 W/kg
SAR(1 g) = 2.51 W/kg; SAR(10 g) = 1.64 W/kg
Maximum value of SAR (measured) = 2.93 W/kg

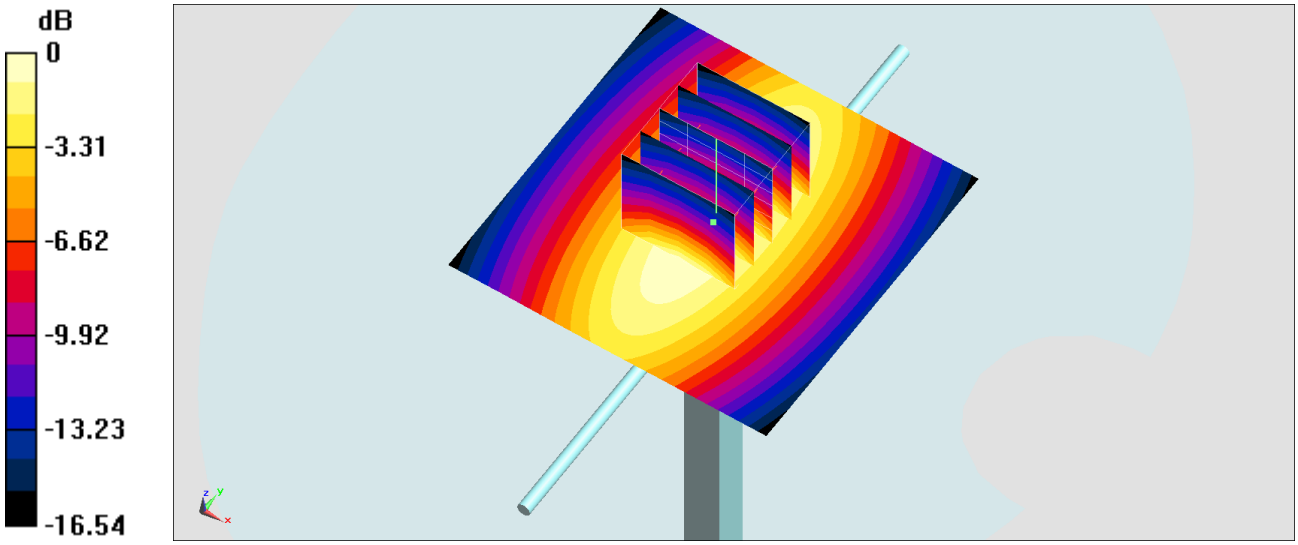

0 dB = 2.96 W/kg = 4.71 dBW/kg

System Check_Head_835MHz

DUT: D835V2-4d167

Communication System: CW; Frequency: 835 MHz;Duty Cycle: 1:1
Medium: HSL_850_200622 Medium parameters used: f = 835 MHz; σ = 0.926 S/m; ε_r = 42.88; ρ = 1000 kg/m^3
Ambient Temperature：23.6 ℃; Liquid Temperature：22.6 ℃

DASY5 Configuration:
- Probe: ES3DV3 - SN3169;ConvF(6.31, 6.31, 6.31) @ 835 MHz;Calibrated: 2020/5/27
- Sensor-Surface: 3mm (Mechanical Surface Detection)
- Electronics: DAE4 Sn854; Calibrated: 2020/5/26
- Phantom: SAM_Right; Type: QD000P40CD; Serial: 1884
- Measurement SW: DASY52, Version 52.10 (4);SEMCAD X Version 14.6.14 (7483)

Pin=250mW/Area Scan (61x61x1): Interpolated grid: dx=1.500 mm, dy=1.500 mm
Maximum value of SAR (interpolated) = 2.93 W/kg

Pin=250mW/Zoom Scan (5x5x7)/Cube 0: Measurement grid: dx=8mm, dy=8mm, dz=5mm
Reference Value = 58.88 V/m; Power Drift = -0.01 dB
Peak SAR (extrapolated) = 3.65 W/kg
SAR(1 g) = 2.49 W/kg; SAR(10 g) = 1.64 W/kg
Maximum value of SAR (measured) = 2.92 W/kg

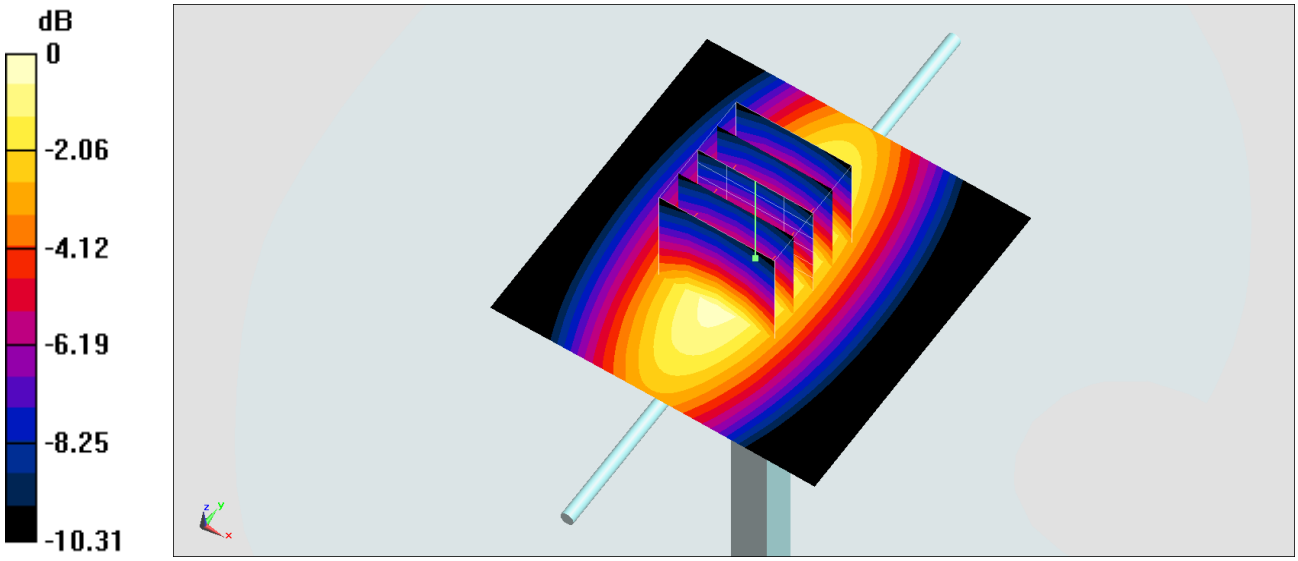

0 dB = 2.92 W/kg = 4.65 dBW/kg

System Check_Head_835MHz

DUT: D835V2-4d167

Communication System: CW; Frequency: 835 MHz;Duty Cycle: 1:1
Medium: HSL_850_200627 Medium parameters used: f = 835 MHz; σ = 0.925 S/m; ε_r = 42.82; ρ = 1000 kg/m^3
Ambient Temperature：23.6 ℃; Liquid Temperature：22.6 ℃

DASY5 Configuration:
- Probe: EX3DV4 - SN7590; ConvF(10.63, 10.63, 10.63) @ 835 MHz; Calibrated: 2020/4/14
- Sensor-Surface: 1.4mm (Mechanical Surface Detection)
- Electronics: DAE3 Sn495; Calibrated: 2020/6/4
- Phantom: SAM_Left; Type: QD000P40CD; Serial: TP:1815
- Measurement SW: DASY52, Version 52.10 (4);SEMCAD X Version 14.6.14 (7483)

Pin=250mW/Area Scan (61x61x1): Interpolated grid: dx=1.500 mm, dy=1.500 mm
Maximum value of SAR (interpolated) = 2.96 W/kg

Pin=250mW/Zoom Scan (5x5x7)/Cube 0: Measurement grid: dx=8mm, dy=8mm, dz=5mm
Reference Value = 56.92 V/m; Power Drift = 0.08 dB
Peak SAR (extrapolated) = 3.95 W/kg
SAR(1 g) = 2.51 W/kg; SAR(10 g) = 1.64 W/kg
Maximum value of SAR (measured) = 2.93 W/kg

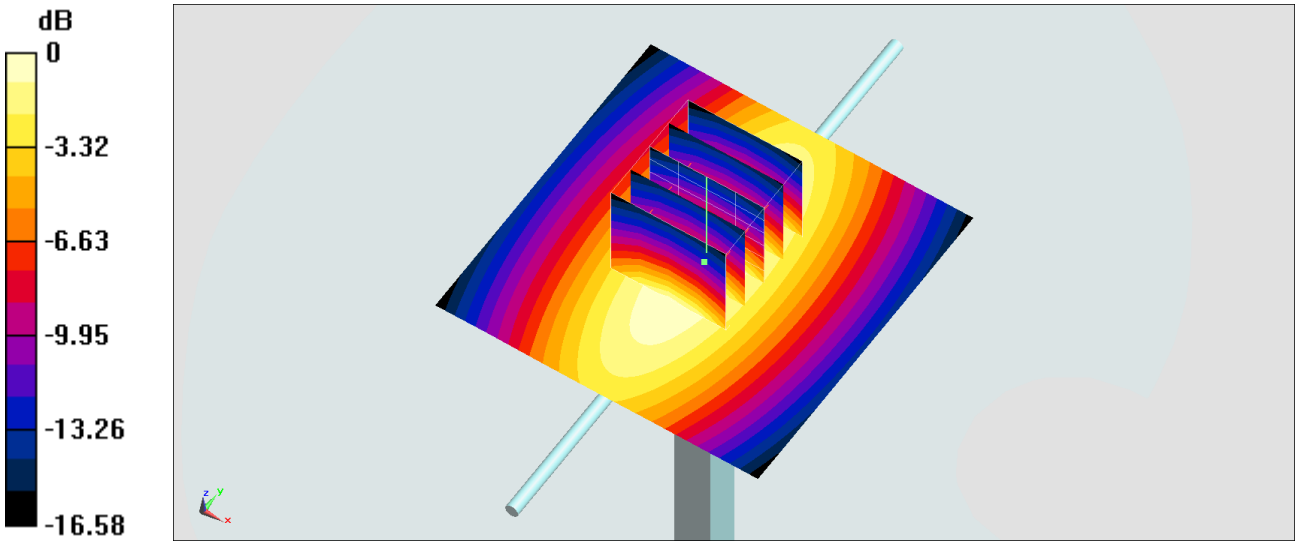

0 dB = 2.96 W/kg = 4.71 dBW/kg

System Check_Head_1750MHz

DUT: D1750V2-1112

Communication System: CW; Frequency: 1750 MHz;Duty Cycle: 1:1
Medium: HSL_1750_200607 Medium parameters used: f = 1750 MHz; σ = 1.349 S/m; ε_r = 40.468; ρ = 1000 kg/m^3
Ambient Temperature：23.6 ℃; Liquid Temperature：22.6 ℃

DASY5 Configuration:
- Probe: EX3DV4 - SN7590; ConvF(8.94, 8.94, 8.94) @ 1750 MHz; Calibrated: 2020/4/14
- Sensor-Surface: 1.4mm (Mechanical Surface Detection)
- Electronics: DAE4 Sn913; Calibrated: 2020/5/6
- Phantom: SAM_Left; Type: QD000P40CD; Serial: TP:1815
- Measurement SW: DASY52, Version 52.10 (4);SEMCAD X Version 14.6.14 (7483)

Pin=250mW/Area Scan (61x61x1): Interpolated grid: dx=1.500 mm, dy=1.500 mm
Maximum value of SAR (interpolated) = 12.2 W/kg

Pin=250mW/Zoom Scan (5x5x7)/Cube 0: Measurement grid: dx=8mm, dy=8mm, dz=5mm
Reference Value = 91.97 V/m; Power Drift = 0.12 dB
Peak SAR (extrapolated) = 18.4 W/kg
SAR(1 g) = 9.66 W/kg; SAR(10 g) = 5.11 W/kg
Maximum value of SAR (measured) = 12.1 W/kg

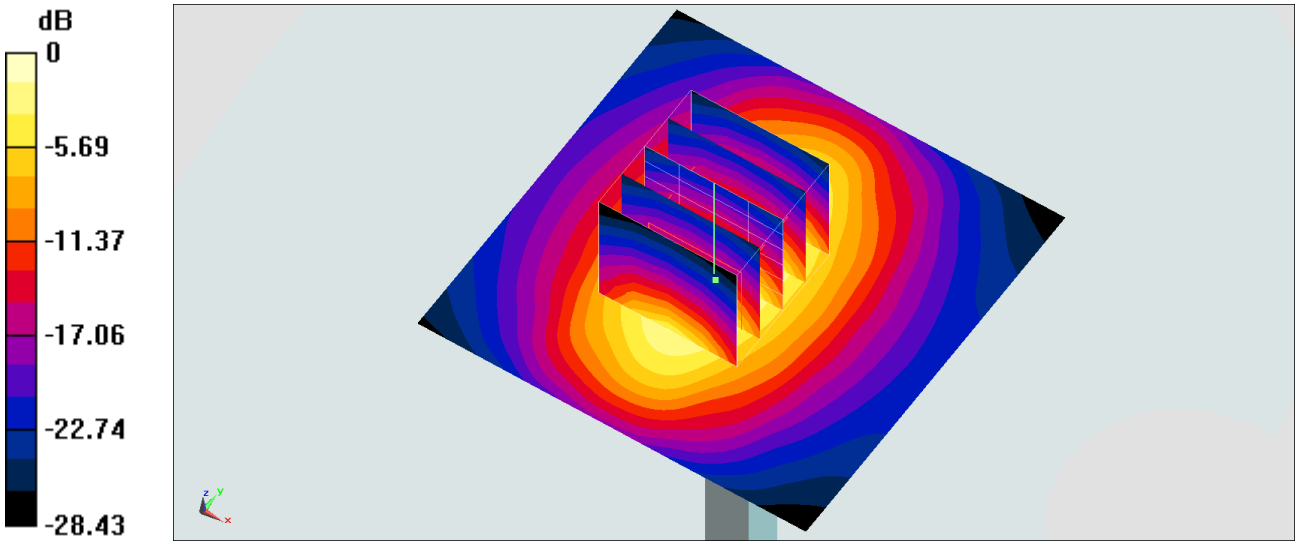

0 dB = 12.2 W/kg = 10.86 dBW/kg

System Check_Head_1750MHz

DUT: D1750V2-1112

Communication System: CW; Frequency: 1750 MHz;Duty Cycle: 1:1
Medium: HSL_1750_200609 Medium parameters used: f = 1750 MHz; σ = 1.369 S/m; ε_r = 40.623; ρ = 1000 kg/m^3
Ambient Temperature：23.2 ℃; Liquid Temperature：22.2 ℃

DASY5 Configuration:
- Probe: EX3DV4 - SN7590; ConvF(8.94, 8.94, 8.94) @ 1750 MHz; Calibrated: 2020/4/14
- Sensor-Surface: 1.4mm (Mechanical Surface Detection)
- Electronics: DAE4 Sn913; Calibrated: 2020/5/6
- Phantom: SAM_Left; Type: QD000P40CD; Serial: TP:1815
- Measurement SW: DASY52, Version 52.10 (4);SEMCAD X Version 14.6.14 (7483)

Pin=250mW/Area Scan (61x61x1): Interpolated grid: dx=1.500 mm, dy=1.500 mm
Maximum value of SAR (interpolated) = 12.4 W/kg

Pin=250mW/Zoom Scan (5x5x7)/Cube 0: Measurement grid: dx=8mm, dy=8mm, dz=5mm
Reference Value = 91.97 V/m; Power Drift = 0.17 dB
Peak SAR (extrapolated) = 18.7 W/kg
SAR(1 g) = 9.81 W/kg; SAR(10 g) = 5.19 W/kg
Maximum value of SAR (measured) = 12.3 W/kg

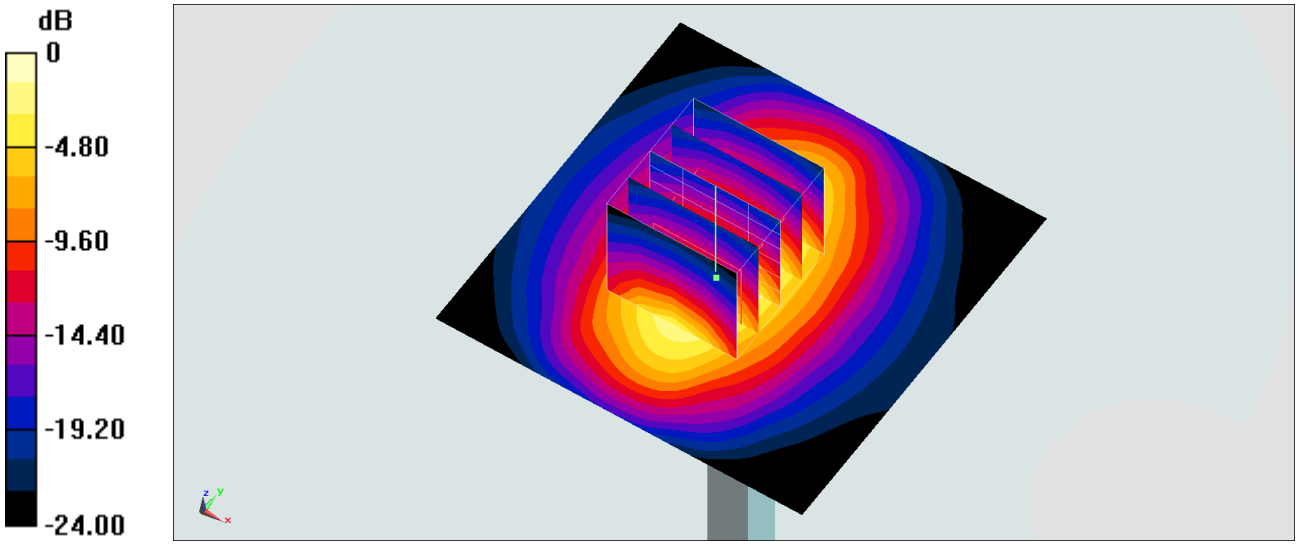

0 dB = 12.4 W/kg = 10.93 dBW/kg

System Check_Head_1750MHz

DUT: D1750V2-1112

Communication System: CW; Frequency: 1750 MHz;Duty Cycle: 1:1
Medium: HSL_1750_200624 Medium parameters used: f = 1750 MHz; σ = 1.365 S/m; ε_r = 39.943; ρ = 1000 kg/m^3
Ambient Temperature：23.7 ℃; Liquid Temperature：22.7 ℃

DASY5 Configuration
- Probe: EX3DV4 - SN7590;ConvF(8.94, 8.94, 8.94) @ 1750 MHz;Calibrated: 2020/4/14
- Sensor-Surface: 1.4mm (Mechanical Surface Detection)
- Electronics: DAE3 Sn495; Calibrated: 2020/6/4
- Phantom: SAM_Left; Type: QD000P40CD; Serial: TP:1815
- Measurement SW: DASY52, Version 52.10 (4); SEMCAD X Version 14.6.14 (7483)

Pin=50mW/Area Scan (61x61x1): Interpolated grid: dx=1.500 mm, dy=1.500 mm
Maximum value of SAR (interpolated) = 2.90 W/kg

Pin=50mW/Zoom Scan (5x5x7)/Cube 0: Measurement grid: dx=8mm, dy=8mm, dz=5mm
Reference Value = 46.92 V/m; Power Drift = -0.07 dB
Peak SAR (extrapolated) = 3.41 W/kg
SAR(1 g) = 1.81 W/kg; SAR(10 g) = 0.957 W/kg
Maximum value of SAR (measured) = 2.80 W/kg

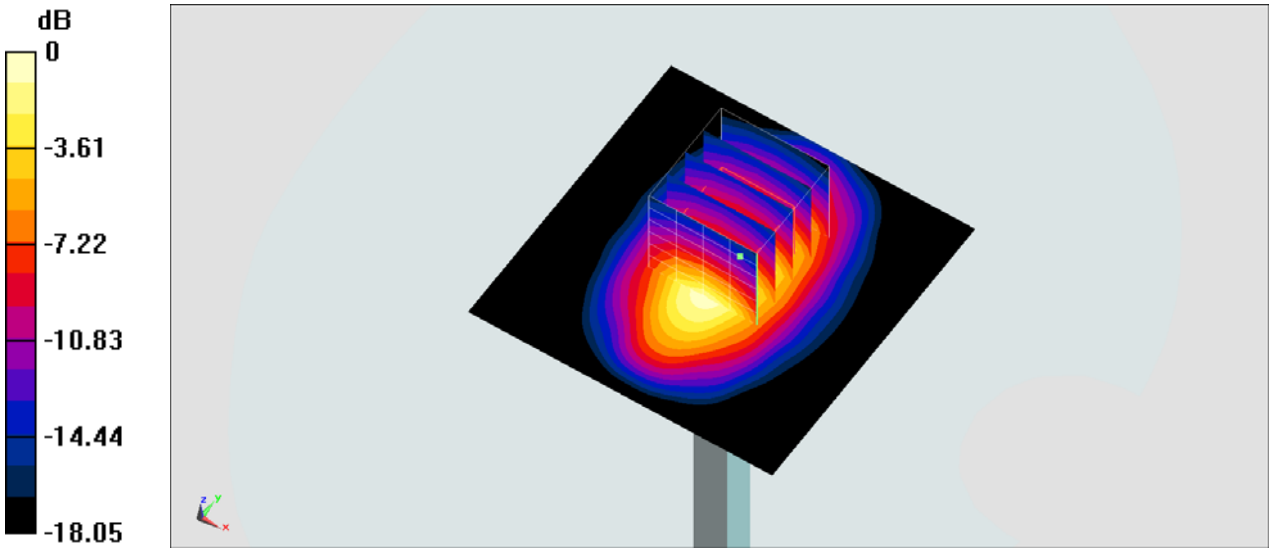

0 dB = 2.80 W/kg = 4.47 dBW/kg

System Check_Head_1750MHz

DUT: D1750V2-1112

Communication System: CW; Frequency: 1750 MHz;Duty Cycle: 1:1
Medium: HSL_1750_200625 Medium parameters used: f = 1750 MHz; σ = 1.389 S/m; ε_r = 40.81; ρ = 1000 kg/m^3
Ambient Temperature：23.3 ℃; Liquid Temperature：22.3 ℃

DASY5 Configuration:
- Probe: EX3DV4 - SN7590; ConvF(8.94, 8.94, 8.94) @ 1750 MHz; Calibrated: 2020/4/14
- Sensor-Surface: 1.4mm (Mechanical Surface Detection)
- Electronics: DAE3 Sn495; Calibrated: 2020/6/4
- Phantom: SAM_Left; Type: QD000P40CD; Serial: TP:1815
- Measurement SW: DASY52, Version 52.10 (4);SEMCAD X Version 14.6.14 (7483)

Pin=50mW/Area Scan (61x61x1): Interpolated grid: dx=1.500 mm, dy=1.500 mm
Maximum value of SAR (interpolated) = 2.95 W/kg

Pin=50mW/Zoom Scan (5x5x7)/Cube 0: Measurement grid: dx=8mm, dy=8mm, dz=5mm
Reference Value = 46.92 V/m; Power Drift = -0.07 dB
Peak SAR (extrapolated) = 3.47 W/kg
SAR(1 g) = 1.84 W/kg; SAR(10 g) = 0.974 W/kg
Maximum value of SAR (measured) = 2.84 W/kg

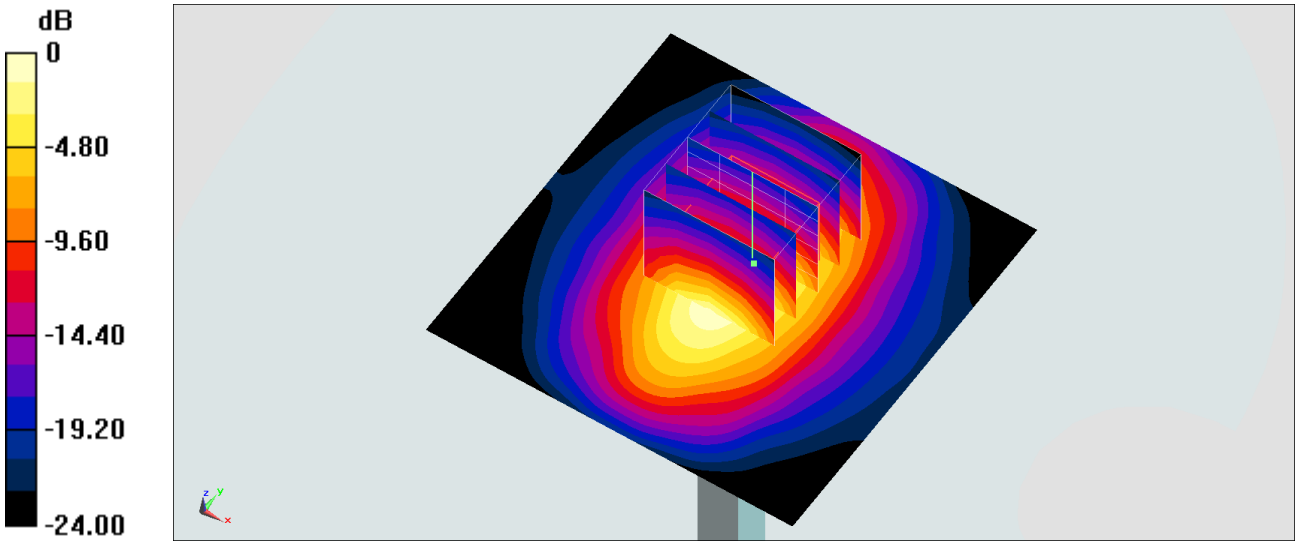

0 dB = 2.95 W/kg = 4.70 dBW/kg

System Check_Head_1750MHz

DUT: D1750V2-1112

Communication System: CW; Frequency: 1750 MHz;Duty Cycle: 1:1
Medium: HSL_1750_200626 Medium parameters used: f = 1750 MHz; σ = 1.379 S/m; ε_r = 40.579; ρ = 1000 kg/m^3
Ambient Temperature：23.2 ℃; Liquid Temperature：22.2 ℃

DASY5 Configuration:
- Probe: EX3DV4 - SN7590; ConvF(8.94, 8.94, 8.94) @ 1750 MHz; Calibrated: 2020/4/14
- Sensor-Surface: 1.4mm (Mechanical Surface Detection)
- Electronics: DAE3 Sn495; Calibrated: 2020/6/4
- Phantom: SAM_Left; Type: QD000P40CD; Serial: TP:1815
- Measurement SW: DASY52, Version 52.10 (4);SEMCAD X Version 14.6.14 (7483)

Pin=50mW/Area Scan (61x61x1): Interpolated grid: dx=1.500 mm, dy=1.500 mm
Maximum value of SAR (interpolated) = 2.93 W/kg

Pin=50mW/Zoom Scan (5x5x7)/Cube 0: Measurement grid: dx=8mm, dy=8mm, dz=5mm
Reference Value = 46.92 V/m; Power Drift = -0.15 dB
Peak SAR (extrapolated) = 3.44 W/kg
SAR(1 g) = 1.83 W/kg; SAR(10 g) = 0.967 W/kg
Maximum value of SAR (measured) = 2.82 W/kg

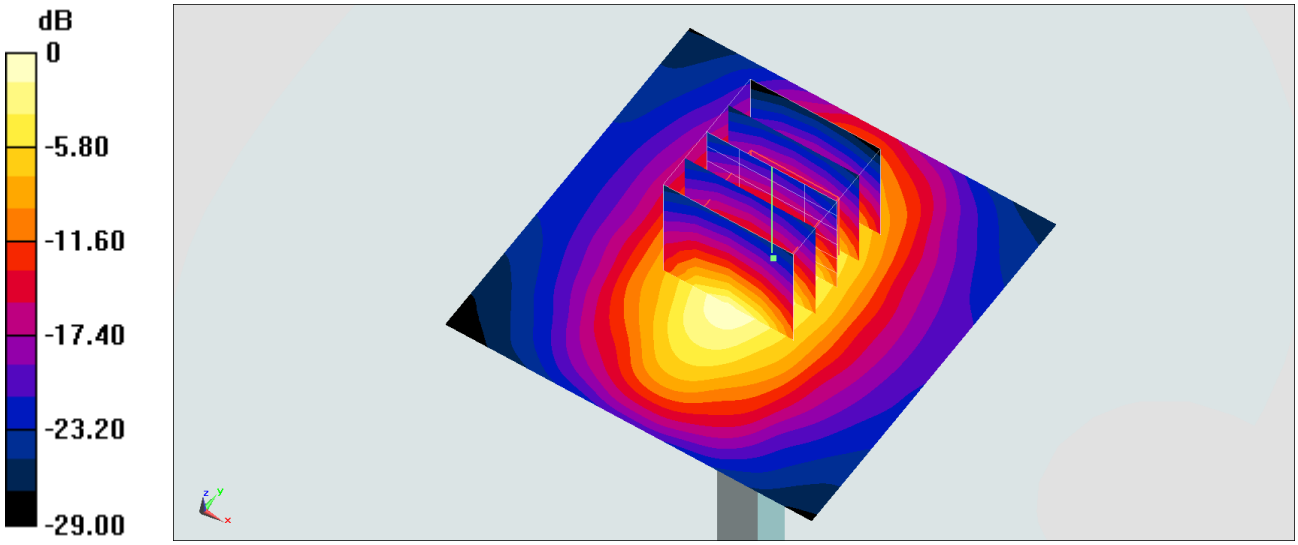

0 dB = 2.93 W/kg = 4.67 dBW/kg

System Check_Head_1750MHz

DUT: D1750V2-1112

Communication System: CW; Frequency: 1750 MHz;Duty Cycle: 1:1
Medium: HSL_1750_200627 Medium parameters used: f = 1750 MHz; σ = 1.371 S/m; ε_r = 40.685; ρ = 1000 kg/m^3
Ambient Temperature：23.6 ℃; Liquid Temperature：22.6 ℃

DASY5 Configuration:
- Probe: EX3DV4 - SN7590; ConvF(8.94, 8.94, 8.94) @ 1750 MHz; Calibrated: 2020/4/14
- Sensor-Surface: 1.4mm (Mechanical Surface Detection)
- Electronics: DAE3 Sn495; Calibrated: 2020/6/4
- Phantom: SAM_Left; Type: QD000P40CD; Serial: TP:1815
- Measurement SW: DASY52, Version 52.10 (4);SEMCAD X Version 14.6.14 (7483)

Pin=50mW/Area Scan (61x61x1): Interpolated grid: dx=1.500 mm, dy=1.500 mm
Maximum value of SAR (interpolated) = 2.91 W/kg

Pin=50mW/Zoom Scan (5x5x7)/Cube 0: Measurement grid: dx=8mm, dy=8mm, dz=5mm
Reference Value = 46.92 V/m; Power Drift = -0.07 dB
Peak SAR (extrapolated) = 3.42 W/kg
SAR(1 g) = 1.82 W/kg; SAR(10 g) = 0.961 W/kg
Maximum value of SAR (measured) = 2.81 W/kg

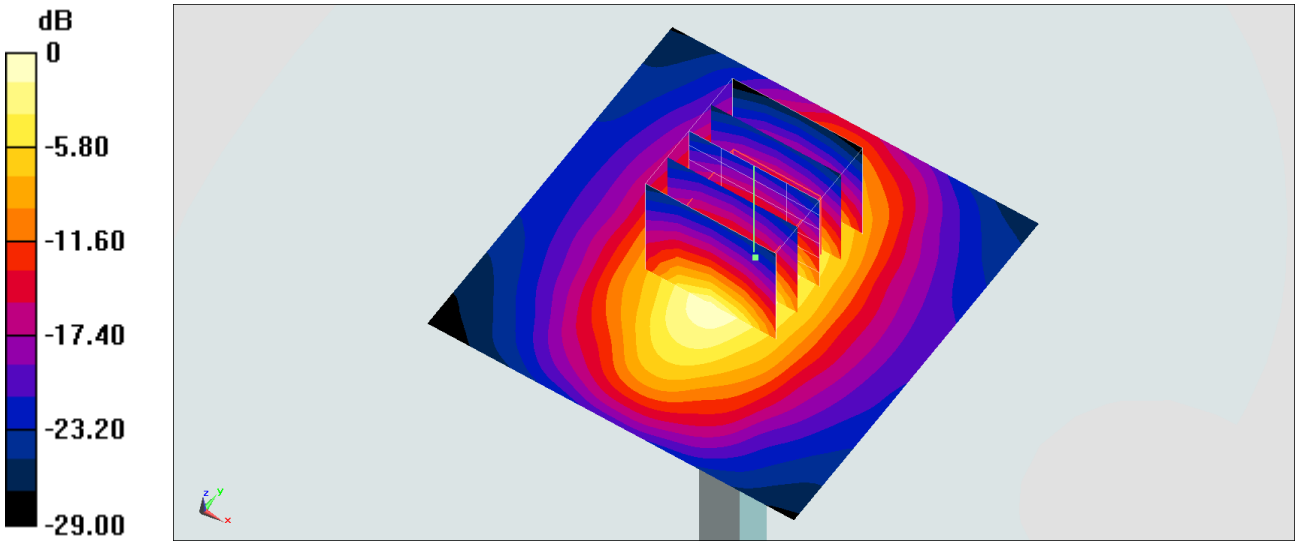

0 dB = 2.91 W/kg = 4.64 dBW/kg

System Check_Head_1900MHz

DUT: D1900V2-5d185

Communication System: CW ; Frequency: 1900 MHz;Duty Cycle: 1:1
Medium: HSL_1900_200607 Medium parameters used: f = 1900 MHz; σ = 1.395 S/m; ε_r = 38.626; ρ = 1000 kg/m^3
Ambient Temperature：23.6 ℃; Liquid Temperature：22.6 ℃

DASY5 Configuration:
- Probe: EX3DV4 - SN7590; ConvF(8.53, 8.53, 8.53) @ 1900 MHz; Calibrated: 2020/4/14
- Sensor-Surface: 1.4mm (Mechanical Surface Detection)
- Electronics: DAE4 Sn913; Calibrated: 2020/5/6
- Phantom: SAM_Left; Type: QD000P40CD; Serial: TP:1815
- Measurement SW: DASY52, Version 52.10 (4);SEMCAD X Version 14.6.14 (7483)

Pin=50mW/Area Scan (61x61x1): Interpolated grid: dx=1.500 mm, dy=1.500 mm
Maximum value of SAR (interpolated) = 2.95 W/kg

Pin=50mW/Zoom Scan (5x5x7)/Cube 0: Measurement grid: dx=8mm, dy=8mm, dz=5mm
Reference Value = 47.87 V/m; Power Drift = -0.07 dB
Peak SAR (extrapolated) = 3.49 W/kg
SAR(1 g) = 1.89 W/kg; SAR(10 g) = 0.987 W/kg
Maximum value of SAR (measured) = 2.95 W/kg

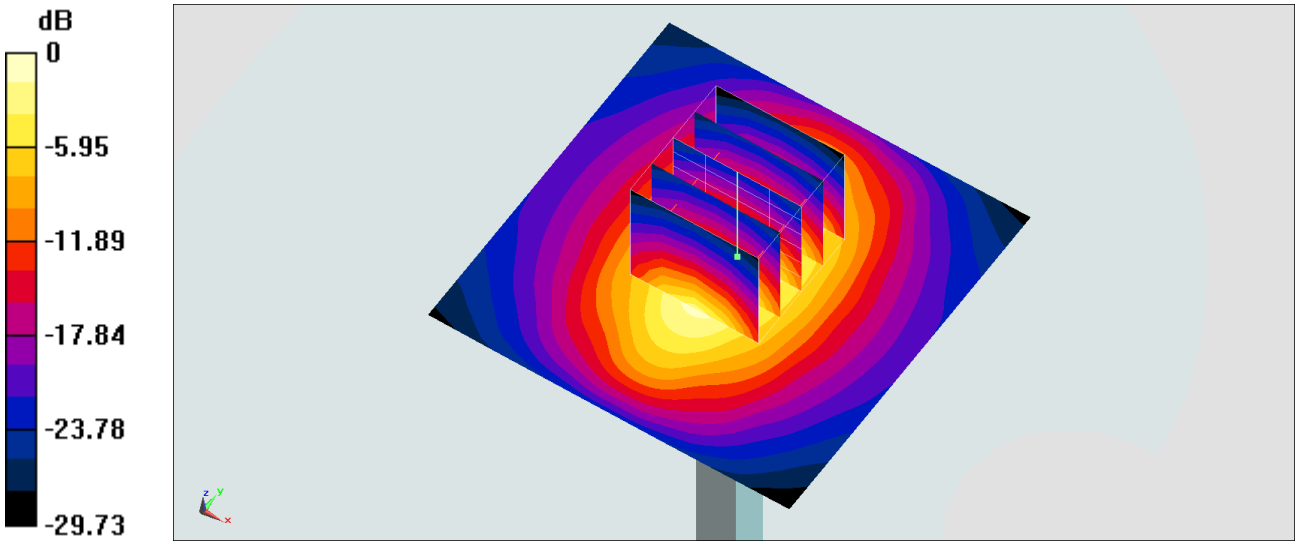

0 dB = 2.95 W/kg = 4.70 dBW/kg

System Check_Head_1900MHz

DUT: D1900V2-5d185

Communication System: CW; Frequency: 1900 MHz;Duty Cycle: 1:1
Medium: HSL_1900_200609 Medium parameters used: f = 1900 MHz; σ = 1.455 S/m; ε_r = 39.146; ρ = 1000 kg/m^3
Ambient Temperature：23.2 ℃; Liquid Temperature：22.2 ℃

DASY5 Configuration:
- Probe: EX3DV4 - SN7590; ConvF(8.53, 8.53, 8.53) @ 1900 MHz; Calibrated: 2020/4/14
- Sensor-Surface: 1.4mm (Mechanical Surface Detection)
- Electronics: DAE4 Sn913; Calibrated: 2020/5/6
- Phantom: SAM_Left; Type: QD000P40CD; Serial: TP:1815
- Measurement SW: DASY52, Version 52.10 (4);SEMCAD X Version 14.6.14 (7483)

Pin=50mW/Area Scan (61x61x1): Interpolated grid: dx=1.500 mm, dy=1.500 mm
Maximum value of SAR (interpolated) = 3.27 W/kg

Pin=50mW/Zoom Scan (5x5x7)/Cube 0: Measurement grid: dx=8mm, dy=8mm, dz=5mm
Reference Value = 48.07 V/m; Power Drift = -0.07 dB
Peak SAR (extrapolated) = 3.83 W/kg
SAR(1 g) = 2.03 W/kg; SAR(10 g) = 1.06 W/kg
Maximum value of SAR (measured) = 3.16 W/kg

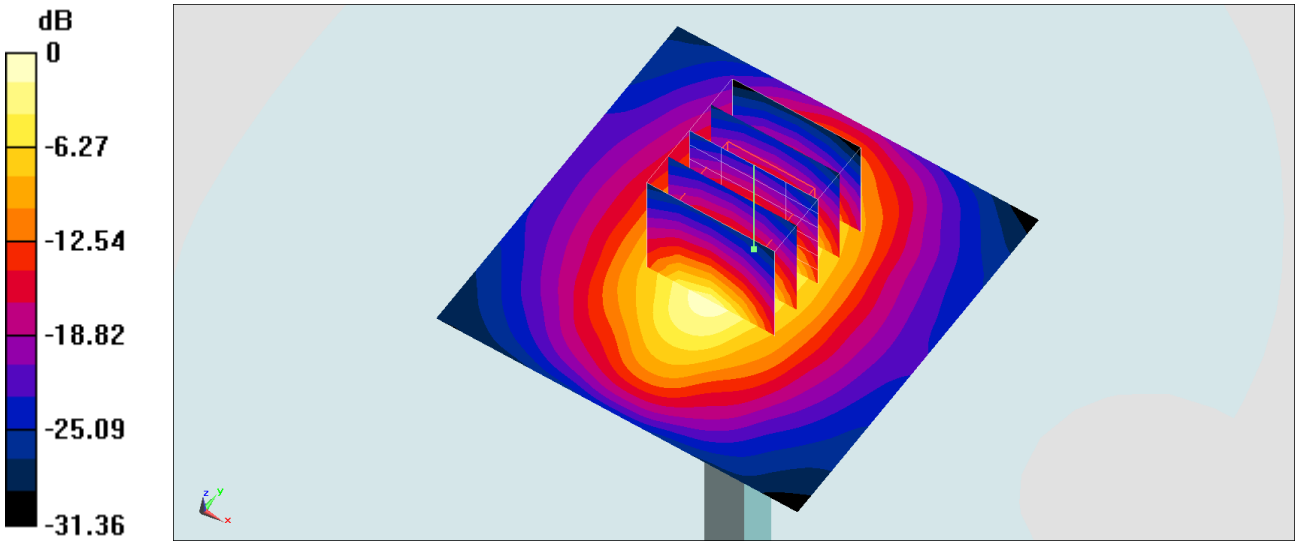

0 dB = 3.27 W/kg = 5.15 dBW/kg

System Check_Head_1900MHz

DUT: D1900V2-5d185

Communication System: CW ; Frequency: 1900 MHz;Duty Cycle: 1:1
Medium: HSL_1900_200617 Medium parameters used: f = 1900 MHz; σ = 1.457 S/m; ε_r = 40.811; ρ = 1000 kg/m^3
Ambient Temperature：23.6 ℃; Liquid Temperature：22.6 ℃

DASY5 Configuration:
- Probe: EX3DV4 - SN7590; ConvF(8.53, 8.53, 8.53) @ 1900 MHz; Calibrated: 2020/4/14
- Sensor-Surface: 1.4mm (Mechanical Surface Detection)
- Electronics: DAE4 Sn913; Calibrated: 2020/5/6
- Phantom: SAM_Left; Type: QD000P40CD; Serial: TP:1815
- Measurement SW: DASY52, Version 52.10 (4);SEMCAD X Version 14.6.14 (7483)

Pin=50mW/Area Scan (61x61x1): Interpolated grid: dx=1.500 mm, dy=1.500 mm
Maximum value of SAR (interpolated) = 3.27 W/kg

Pin=50mW/Zoom Scan (5x5x7)/Cube 0: Measurement grid: dx=8mm, dy=8mm, dz=5mm
Reference Value = 48.07 V/m; Power Drift = -0.07 dB
Peak SAR (extrapolated) = 3.83 W/kg
SAR(1 g) = 2.04 W/kg; SAR(10 g) = 1.06 W/kg
Maximum value of SAR (measured) = 3.16 W/kg

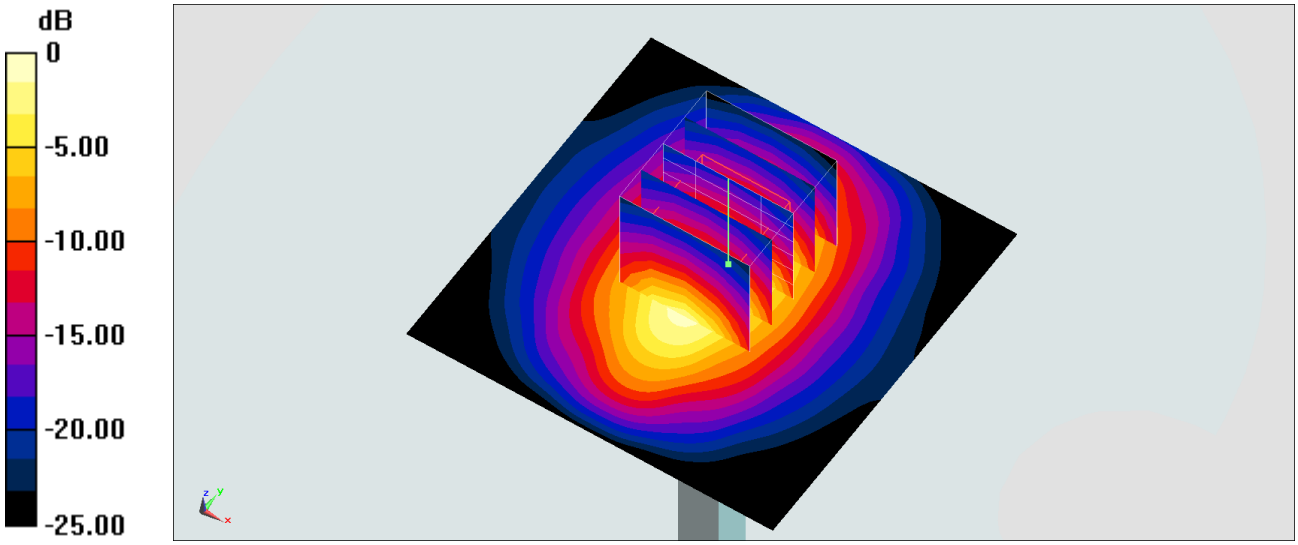

0 dB = 3.27 W/kg = 5.15 dBW/kg

System Check_Head_1900MHz

DUT: D1900V2-5d185

Communication System: CW ; Frequency: 1900 MHz;Duty Cycle: 1:1
Medium: HSL_1900_200619 Medium parameters used: f = 1900 MHz; σ = 1.39 S/m; ε_r = 38.71; ρ = 1000 kg/m^3
Ambient Temperature：23.7 ℃; Liquid Temperature：22.7 ℃

DASY5 Configuration:
- Probe: EX3DV4 - SN7590; ConvF(8.53, 8.53, 8.53) @ 1900 MHz; Calibrated: 2020/4/14
- Sensor-Surface: 1.4mm (Mechanical Surface Detection)
- Electronics: DAE4 Sn913; Calibrated: 2020/5/6
- Phantom: SAM_Left; Type: QD000P40CD; Serial: TP:1815
- Measurement SW: DASY52, Version 52.10 (4);SEMCAD X Version 14.6.14 (7483)

Pin=50mW/Area Scan (61x61x1): Interpolated grid: dx=1.500 mm, dy=1.500 mm
Maximum value of SAR (interpolated) = 3.21 W/kg

Pin=50mW/Zoom Scan (5x5x7)/Cube 0: Measurement grid: dx=8mm, dy=8mm, dz=5mm
Reference Value = 48.46 V/m; Power Drift = -0.08 dB
Peak SAR (extrapolated) = 3.71 W/kg
SAR(1 g) = 1.98 W/kg; SAR(10 g) = 1.03 W/kg
Maximum value of SAR (measured) = 3.05 W/kg

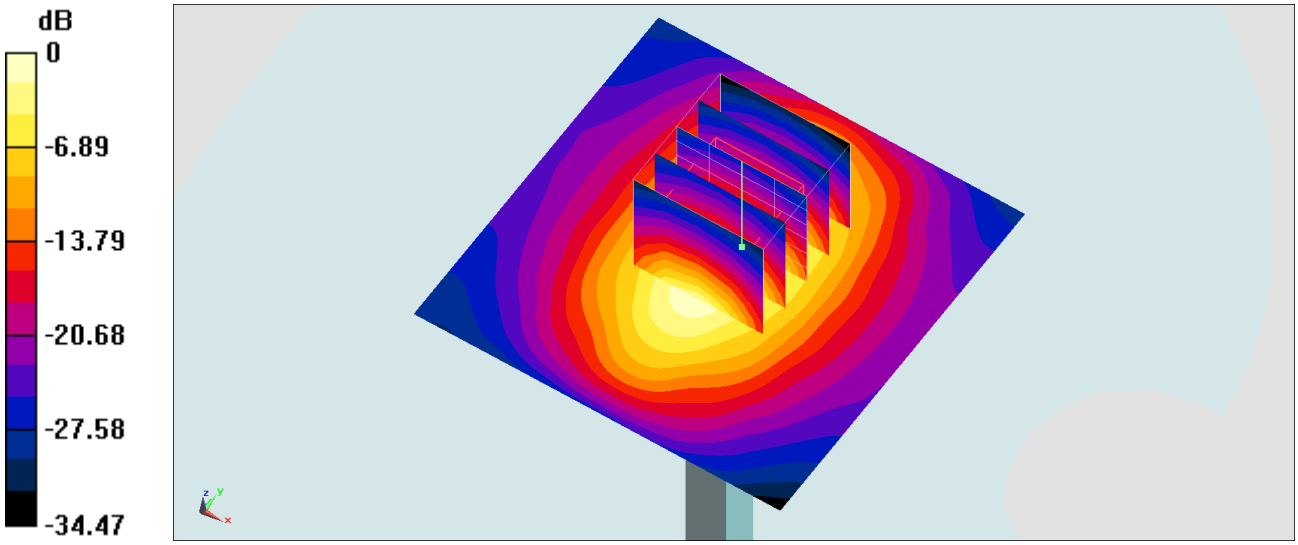

0 dB = 3.21 W/kg = 5.07 dBW/kg

System Check_Head_1900MHz

DUT: D1900V2-5d185

Communication System: CW; Frequency: 1900 MHz;Duty Cycle: 1:1
Medium: HSL_1900_200623 Medium parameters used: f = 1900 MHz; σ = 1.422 S/m; ε_r = 39.531; ρ = 1000 kg/m^3
Ambient Temperature：23.5 ℃; Liquid Temperature：22.5 ℃

DASY5 Configuration:
- Probe: EX3DV4 - SN7590; ConvF(8.53, 8.53, 8.53) @ 1900 MHz; Calibrated: 2020/4/14
- Sensor-Surface: 1.4mm (Mechanical Surface Detection)
- Electronics: DAE4 Sn913; Calibrated: 2020/5/6
- Phantom: SAM_Left; Type: QD000P40CD; Serial: TP:1815
- Measurement SW: DASY52, Version 52.10 (4);SEMCAD X Version 14.6.14 (7483)

Pin=50mW/Area Scan (61x61x1): Interpolated grid: dx=1.500 mm, dy=1.500 mm
Maximum value of SAR (interpolated) = 3.08 W/kg

Pin=50mW/Zoom Scan (5x5x7)/Cube 0: Measurement grid: dx=8mm, dy=8mm, dz=5mm
Reference Value = 47.15 V/m; Power Drift = -0.13 dB
Peak SAR (extrapolated) = 3.64 W/kg
SAR(1 g) = 1.99 W/kg; SAR(10 g) = 1.04 W/kg
Maximum value of SAR (measured) = 3.07 W/kg

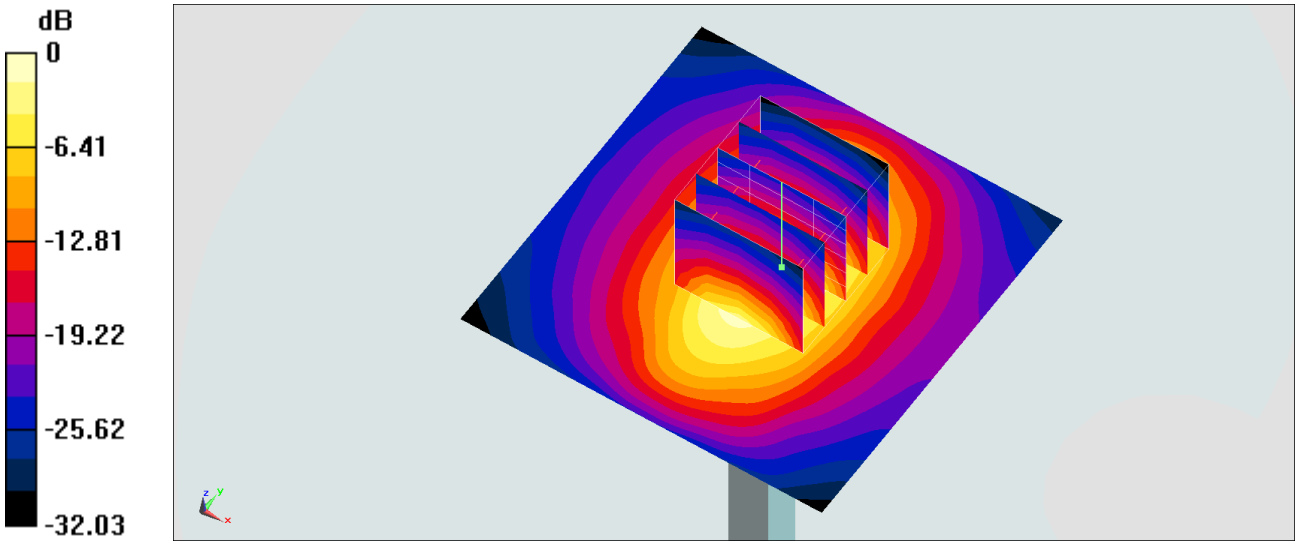

0 dB = 3.08 W/kg = 4.89 dBW/kg

System Check_Head_1900MHz

DUT: D1900V2-5d185

Communication System: CW; Frequency: 1900 MHz;Duty Cycle: 1:1
Medium: HSL_1900_200624 Medium parameters used: f = 1900 MHz; σ = 1.447 S/m; ε_r = 40.783; ρ = 1000 kg/m^3
Ambient Temperature：23.7 ℃; Liquid Temperature：22.7 ℃

DASY5 Configuration:
- Probe: EX3DV4 - SN7590; ConvF(8.53, 8.53, 8.53) @ 1900 MHz; Calibrated: 2020/4/14
- Sensor-Surface: 1.4mm (Mechanical Surface Detection)
- Electronics: DAE3 Sn495; Calibrated: 2020/6/4
- Phantom: SAM_Left; Type: QD000P40CD; Serial: TP:1815
- Measurement SW: DASY52, Version 52.10 (4);SEMCAD X Version 14.6.14 (7483)

Pin=50mW/Area Scan (61x61x1): Interpolated grid: dx=1.500 mm, dy=1.500 mm
Maximum value of SAR (interpolated) = 3.13 W/kg

Pin=50mW/Zoom Scan (5x5x7)/Cube 0: Measurement grid: dx=8mm, dy=8mm, dz=5mm
Reference Value = 47.19 V/m; Power Drift = -0.13 dB
Peak SAR (extrapolated) = 3.72 W/kg
SAR(1 g) = 2.03 W/kg; SAR(10 g) = 1.06 W/kg
Maximum value of SAR (measured) = 3.13 W/kg

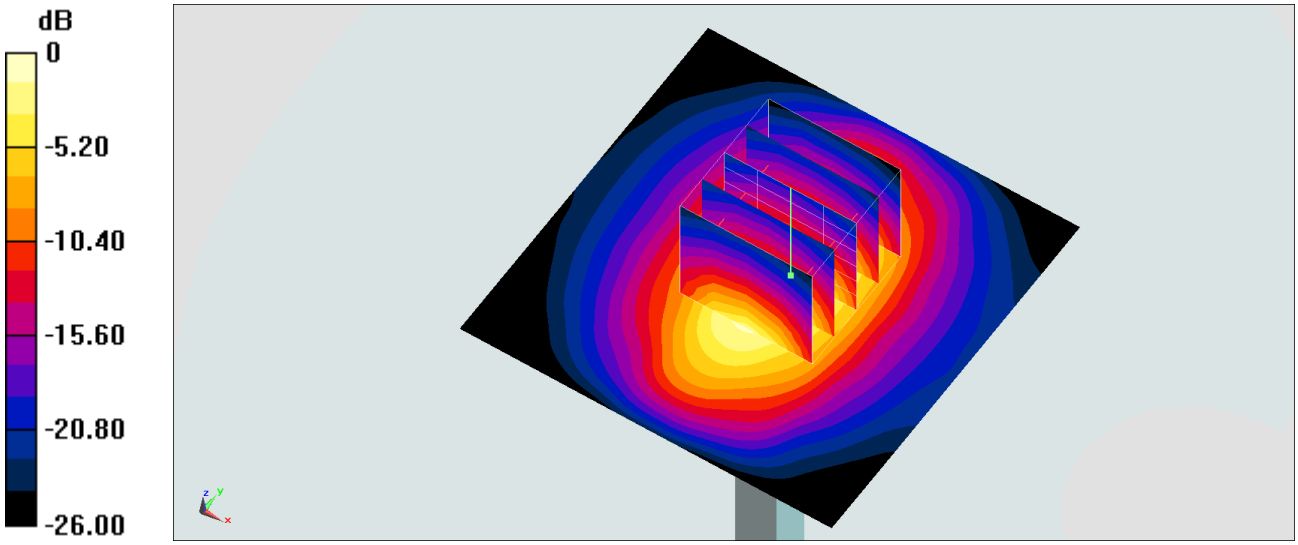

0 dB = 3.13 W/kg = 4.96 dBW/kg

System Check_Head_1900MHz

DUT: D1900V2-5d185

Communication System: CW; Frequency: 1900 MHz;Duty Cycle: 1:1
Medium: HSL_1900_200625 Medium parameters used: f = 1900 MHz; σ = 1.446 S/m; ε_r = 40.903; ρ = 1000 kg/m^3
Ambient Temperature：23.3 ℃; Liquid Temperature：22.3 ℃

DASY5 Configuration:
- Probe: EX3DV4 - SN7590; ConvF(8.53, 8.53, 8.53) @ 1900 MHz; Calibrated: 2020/4/14
- Sensor-Surface: 1.4mm (Mechanical Surface Detection)
- Electronics: DAE3 Sn495; Calibrated: 2020/6/4
- Phantom: SAM_Left; Type: QD000P40CD; Serial: TP:1815
- Measurement SW: DASY52, Version 52.10 (4);SEMCAD X Version 14.6.14 (7483)

Pin=50mW/Area Scan (61x61x1): Interpolated grid: dx=1.500 mm, dy=1.500 mm
Maximum value of SAR (interpolated) = 3.13 W/kg

Pin=50mW/Zoom Scan (5x5x7)/Cube 0: Measurement grid: dx=8mm, dy=8mm, dz=5mm
Reference Value = 47.19 V/m; Power Drift = -0.13 dB
Peak SAR (extrapolated) = 3.72 W/kg
SAR(1 g) = 2.03 W/kg; SAR(10 g) = 1.05 W/kg
Maximum value of SAR (measured) = 3.12 W/kg

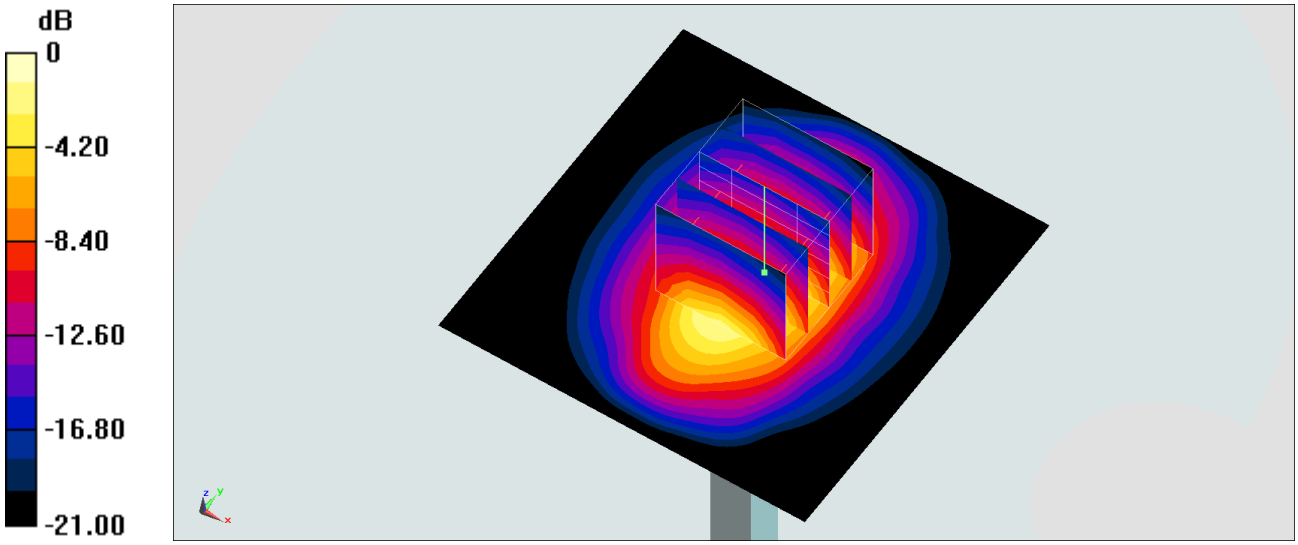

0 dB = 3.13 W/kg = 4.96 dBW/kg

System Check_Head_1900MHz

DUT: D1900V2-5d185

Communication System: CW; Frequency: 1900 MHz;Duty Cycle: 1:1
Medium: HSL_1900_200627 Medium parameters used: f = 1900 MHz; σ = 1.388 S/m; ε_r = 38.629; ρ = 1000 kg/m^3
Ambient Temperature：23.6 ℃; Liquid Temperature：22.6 ℃

DASY5 Configuration:
- Probe: EX3DV4 - SN7590; ConvF(8.53, 8.53, 8.53) @ 1900 MHz; Calibrated: 2020/4/14
- Sensor-Surface: 1.4mm (Mechanical Surface Detection)
- Electronics: DAE3 Sn495; Calibrated: 2020/6/4
- Phantom: SAM_Left; Type: QD000P40CD; Serial: TP:1815
- Measurement SW: DASY52, Version 52.10 (4);SEMCAD X Version 14.6.14 (7483)

Pin=50mW/Area Scan (61x61x1): Interpolated grid: dx=1.500 mm, dy=1.500 mm
Maximum value of SAR (interpolated) = 3.01 W/kg

Pin=50mW/Zoom Scan (5x5x7)/Cube 0: Measurement grid: dx=8mm, dy=8mm, dz=5mm
Reference Value = 47.19 V/m; Power Drift = -0.13 dB
Peak SAR (extrapolated) = 3.57 W/kg
SAR(1 g) = 1.95 W/kg; SAR(10 g) = 1.01 W/kg
Maximum value of SAR (measured) = 3.00 W/kg

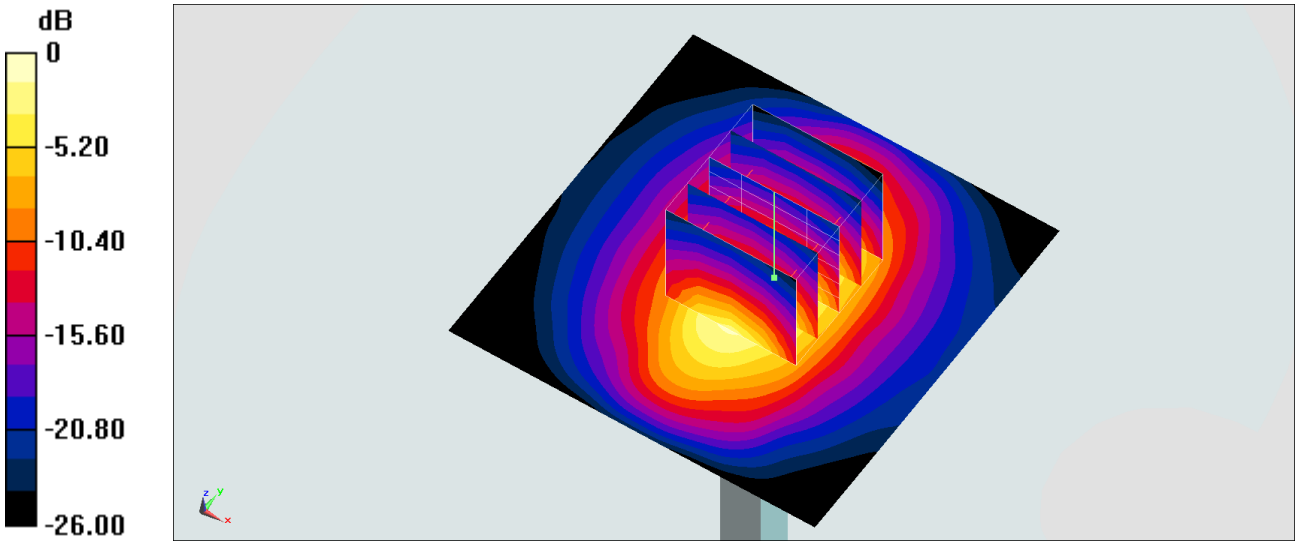

0 dB = 3.01 W/kg = 4.79 dBW/kg

System Check_Head_1900MHz

DUT: D1900V2-5d185

Communication System: CW; Frequency: 1900 MHz;Duty Cycle: 1:1
Medium: HSL_1900_200629 Medium parameters used: f = 1900 MHz; σ = 1.419 S/m; ε_r = 40.831; ρ = 1000 kg/m^3
Ambient Temperature：23.6 ℃; Liquid Temperature：22.6 ℃

DASY5 Configuration:
- Probe: EX3DV4 - SN7590; ConvF(8.53, 8.53, 8.53) @ 1900 MHz; Calibrated: 2020/4/14
- Sensor-Surface: 1.4mm (Mechanical Surface Detection)
- Electronics: DAE3 Sn495; Calibrated: 2020/6/4
- Phantom: SAM_Left; Type: QD000P40CD; Serial: TP:1815
- Measurement SW: DASY52, Version 52.10 (4);SEMCAD X Version 14.6.14 (7483)

Pin=50mW/Area Scan (61x61x1): Interpolated grid: dx=1.500 mm, dy=1.500 mm
Maximum value of SAR (interpolated) = 3.07 W/kg

Pin=50mW/Zoom Scan (5x5x7)/Cube 0: Measurement grid: dx=8mm, dy=8mm, dz=5mm
Reference Value = 47.19 V/m; Power Drift = -0.13 dB
Peak SAR (extrapolated) = 3.65 W/kg
SAR(1 g) = 1.99 W/kg; SAR(10 g) = 1.03 W/kg
Maximum value of SAR (measured) = 3.07 W/kg

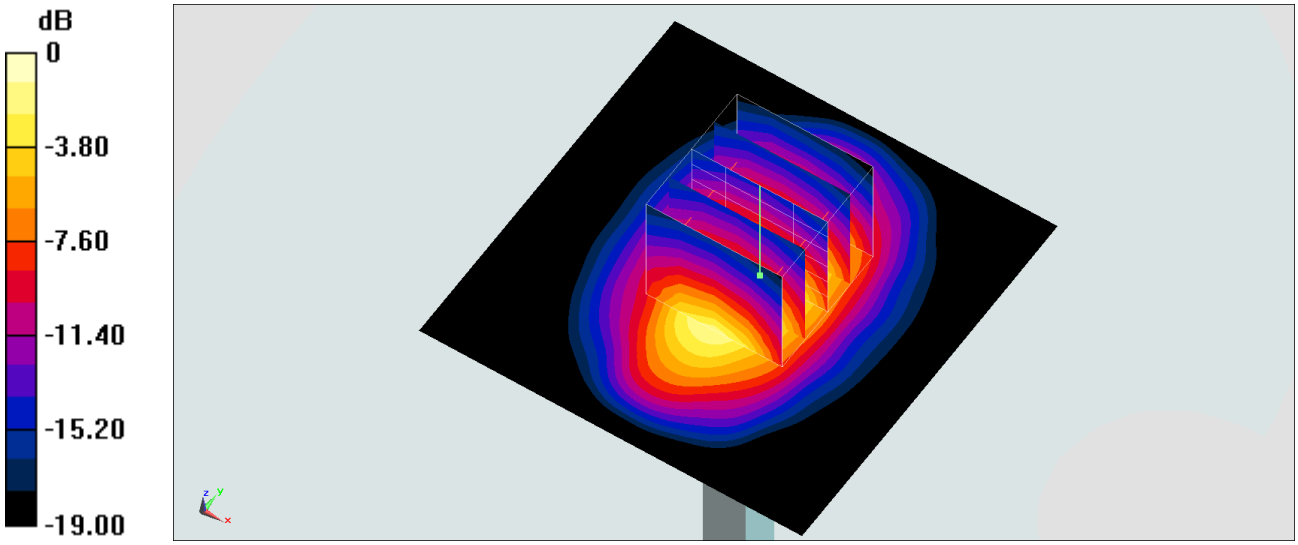

0 dB = 3.07 W/kg = 4.87 dBW/kg

System Check_Head_2300MHz

DUT: D2300V2-1006

Communication System: CW; Frequency: 2300 MHz;Duty Cycle: 1:1
Medium: HSL_2300_200528 Medium parameters used: f = 2300 MHz; σ = 1.637 S/m; ε_r = 39.069; ρ = 1000 kg/m^3
Ambient Temperature：23.6 ℃; Liquid Temperature：22.6 ℃

DASY5 Configuration:
- Probe: EX3DV4 - SN7590; ConvF(8.16, 8.16, 8.16) @ 2300 MHz; Calibrated: 2020/4/14
- Sensor-Surface: 1.4mm (Mechanical Surface Detection)
- Electronics: DAE4 Sn913; Calibrated: 2020/5/6
- Phantom: SAM_Left; Type: QD000P40CD; Serial: TP:1801
- Measurement SW: DASY52, Version 52.10 (4);SEMCAD X Version 14.6.14 (7483)

Pin=250mW/Area Scan (81x81x1): Interpolated grid: dx=1.200 mm, dy=1.200 mm
Maximum value of SAR (interpolated) = 16.6 W/kg

Pin=250mW/Zoom Scan (7x7x7)/Cube 0: Measurement grid: dx=5mm, dy=5mm, dz=5mm
Reference Value = 96.12 V/m; Power Drift = -0.19 dB
Peak SAR (extrapolated) = 25.8 W/kg
SAR(1 g) = 12.3 W/kg; SAR(10 g) = 5.88 W/kg
Maximum value of SAR (measured) = 16.1 W/kg

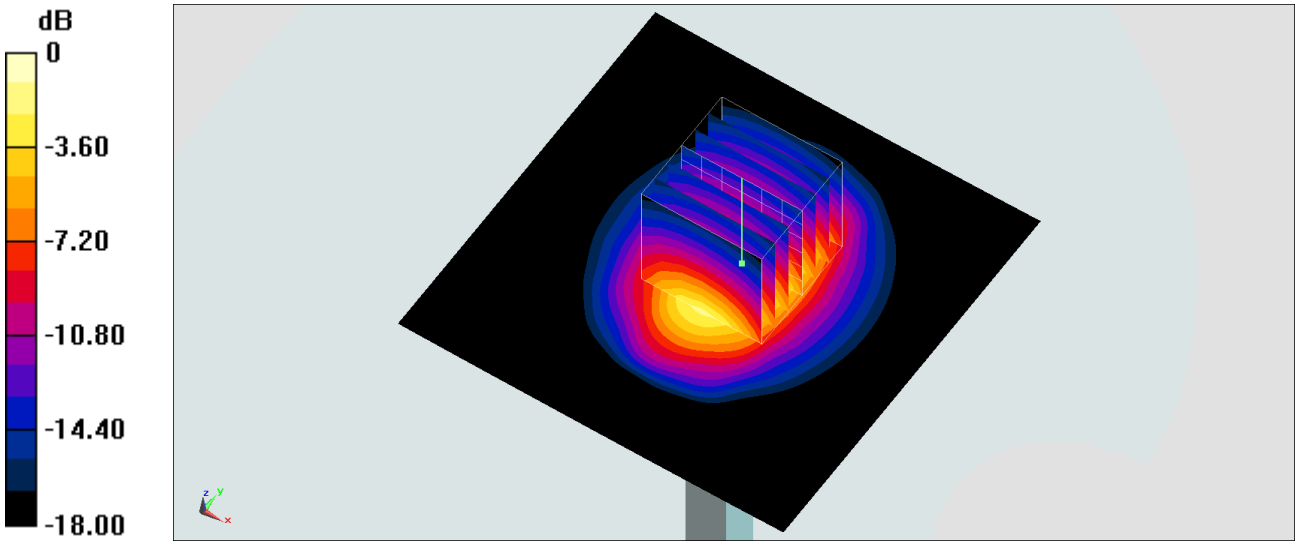

0 dB = 16.6 W/kg = 12.20 dBW/kg

System Check_Head_2300MHz

DUT: D2300V2-1006

Communication System: CW; Frequency: 2300 MHz;Duty Cycle: 1:1
Medium: HSL_2300_200619 Medium parameters used: f = 2300 MHz; σ = 1.594 S/m; ε_r = 39.226; ρ = 1000 kg/m^3
Ambient Temperature：23.6 ℃; Liquid Temperature：22.6 ℃

DASY5 Configuration:
- Probe: EX3DV4 - SN7590; ConvF(8.16, 8.16, 8.16) @ 2300 MHz; Calibrated: 2020/4/14
- Sensor-Surface: 1.4mm (Mechanical Surface Detection)
- Electronics: DAE4 Sn913; Calibrated: 2020/5/6
- Phantom: SAM_Left; Type: QD000P40CD; Serial: TP:1815
- Measurement SW: DASY52, Version 52.10 (4);SEMCAD X Version 14.6.14 (7483)

Pin=50mW/Area Scan (81x81x1): Interpolated grid: dx=1.200 mm, dy=1.200 mm
Maximum value of SAR (interpolated) = 3.67 W/kg

Pin=50mW/Zoom Scan (7x7x7)/Cube 0: Measurement grid: dx=5mm, dy=5mm, dz=5mm
Reference Value = 48.13 V/m; Power Drift = -0.08 dB
Peak SAR (extrapolated) = 4.34 W/kg
SAR(1 g) = 2.28 W/kg; SAR(10 g) = 1.11 W/kg
Maximum value of SAR (measured) = 3.63 W/kg

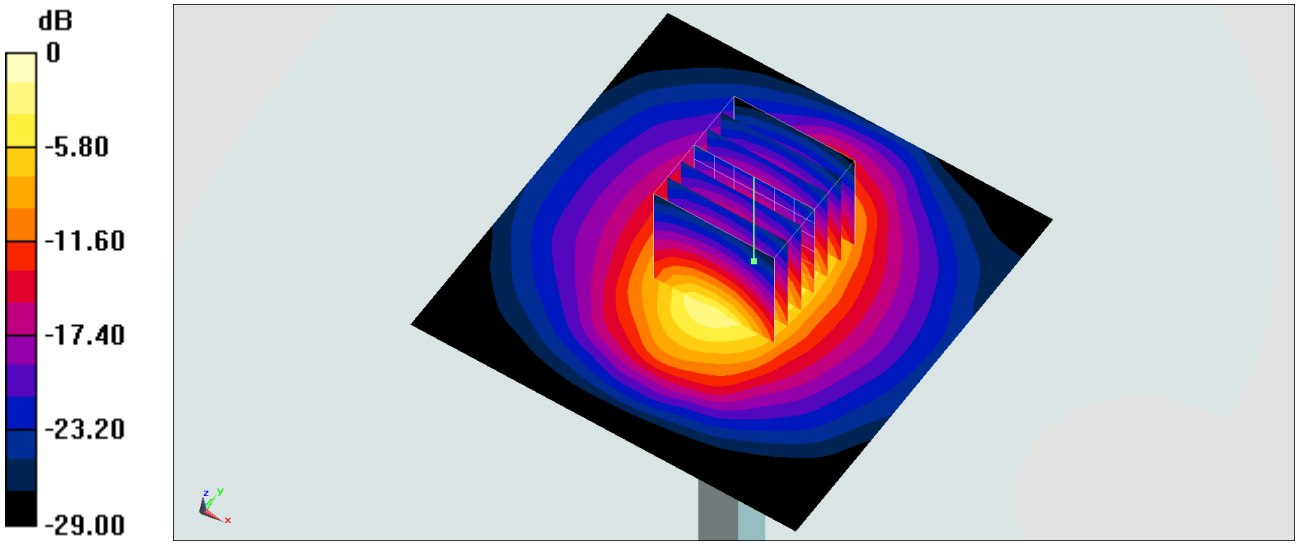

0 dB = 3.67 W/kg = 5.65 dBW/kg

System Check_Head_2300MHz

DUT: D2300V2-1006

Communication System: CW; Frequency: 2300 MHz;Duty Cycle: 1:1
Medium: HSL_2300_200626 Medium parameters used: f = 2300 MHz; σ = 1.64 S/m; ε_r = 39.822; ρ = 1000 kg/m^3
Ambient Temperature：23.2 ℃; Liquid Temperature：22.2 ℃

DASY5 Configuration:
- Probe: EX3DV4 - SN7590; ConvF(8.16, 8.16, 8.16) @ 2300 MHz; Calibrated: 2020/4/14
- Sensor-Surface: 1.4mm (Mechanical Surface Detection)
- Electronics: DAE3 Sn495; Calibrated: 2020/6/4
- Phantom: SAM_Left; Type: QD000P40CD; Serial: TP:1815
- Measurement SW: DASY52, Version 52.10 (4);SEMCAD X Version 14.6.14 (7483)

Pin=50mW/Area Scan (81x81x1): Interpolated grid: dx=1.200 mm, dy=1.200 mm
Maximum value of SAR (interpolated) = 3.83 W/kg

Pin=50mW/Zoom Scan (7x7x7)/Cube 0: Measurement grid: dx=5mm, dy=5mm, dz=5mm
Reference Value = 48.51 V/m; Power Drift = -0.15 dB
Peak SAR (extrapolated) = 4.50 W/kg
SAR(1 g) = 2.36 W/kg; SAR(10 g) = 1.14 W/kg
Maximum value of SAR (measured) = 3.77 W/kg

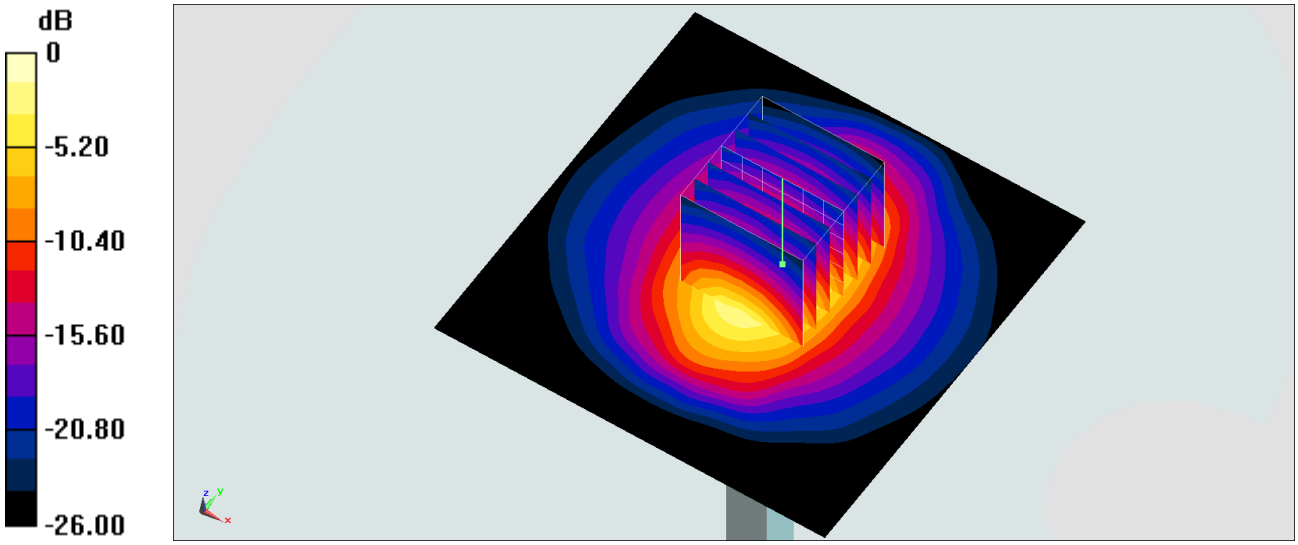

0 dB = 3.83 W/kg = 5.83 dBW/kg

System Check_Head_2300MHz

DUT: D2300V2-1006

Communication System: CW; Frequency: 2300 MHz;Duty Cycle: 1:1
Medium: HSL_2300_200628 Medium parameters used: f = 2300 MHz; σ = 1.66 S/m; ε_r = 39.202; ρ = 1000 kg/m^3
Ambient Temperature：23.5 ℃; Liquid Temperature：22.5 ℃

DASY5 Configuration:
- Probe: EX3DV4 - SN7590; ConvF(8.16, 8.16, 8.16) @ 2300 MHz; Calibrated: 2020/4/14
- Sensor-Surface: 1.4mm (Mechanical Surface Detection)
- Electronics: DAE3 Sn495; Calibrated: 2020/6/4
- Phantom: SAM_Left; Type: QD000P40CD; Serial: TP:1815
- Measurement SW: DASY52, Version 52.10 (4);SEMCAD X Version 14.6.14 (7483)

Pin=50mW/Area Scan (81x81x1): Interpolated grid: dx=1.200 mm, dy=1.200 mm
Maximum value of SAR (interpolated) = 3.88 W/kg

Pin=50mW/Zoom Scan (7x7x7)/Cube 0: Measurement grid: dx=5mm, dy=5mm, dz=5mm
Reference Value = 48.51 V/m; Power Drift = -0.15 dB
Peak SAR (extrapolated) = 4.55 W/kg
SAR(1 g) = 2.39 W/kg; SAR(10 g) = 1.15 W/kg
Maximum value of SAR (measured) = 3.82 W/kg

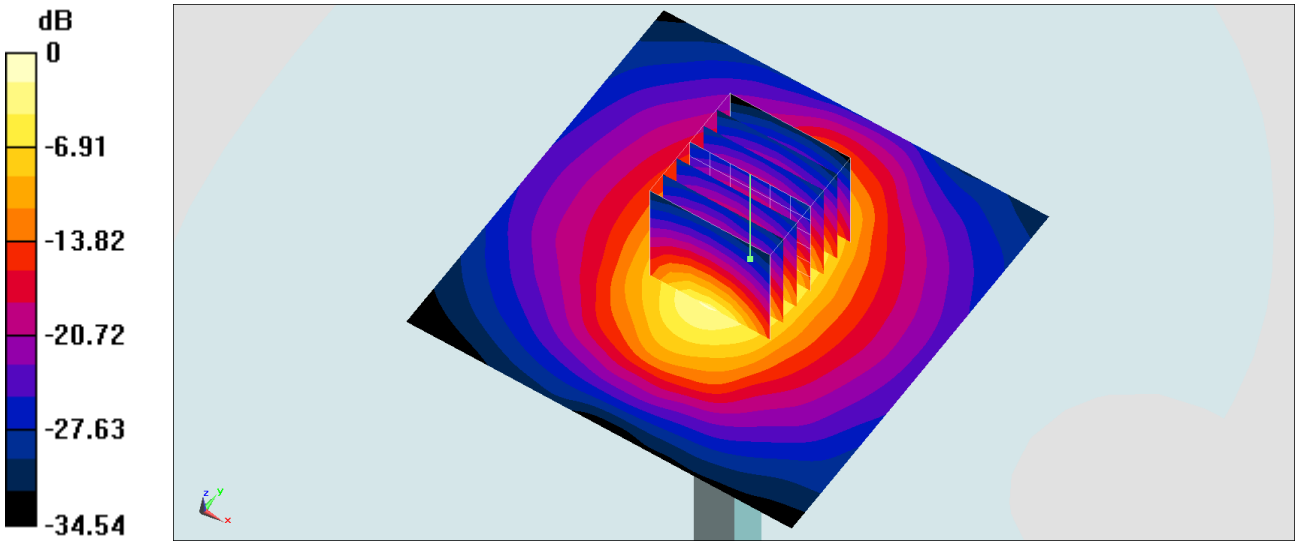

0 dB = 3.88 W/kg = 5.89 dBW/kg

System Check_Head_2450MHz

DUT: D2450V2-929

Communication System: CW; Frequency: 2450 MHz;Duty Cycle: 1:1
Medium: HSL_2450_200626 Medium parameters used : f = 2450 MHz; σ = 1.803 S/m; ε_r = 39.564; ρ = 1000 kg/m^3
Ambient Temperature：23.2 ℃; Liquid Temperature：22.2 ℃

DASY5 Configuration:
- Probe: EX3DV4 - SN3931; ConvF(7.61, 7.61, 7.61) @ 2450 MHz; Calibrated: 2019/9/26
- Sensor-Surface: 1.4mm (Mechanical Surface Detection)
- Electronics: DAE4 Sn1424; Calibrated: 2020/1/24
- Phantom: SAM_Right; Type: SAM; Serial: TP:1446
- Measurement SW: DASY52, Version 52.10 (4);SEMCAD X Version 14.6.14 (7483)

Pin=250mW/Area Scan (71x71x1): Interpolated grid: dx=1.200 mm, dy=1.200 mm
Maximum value of SAR (interpolated) = 23.3 W/kg

Pin=250mW/Zoom Scan (7x7x7)/Cube 0: Measurement grid: dx=5mm, dy=5mm, dz=5mm
Reference Value = 117.5 V/m; Power Drift = -0.05 dB
Peak SAR (extrapolated) = 28.3 W/kg
SAR(1 g) = 13.6 W/kg; SAR(10 g) = 6.21 W/kg
Maximum value of SAR (measured) = 22.9 W/kg

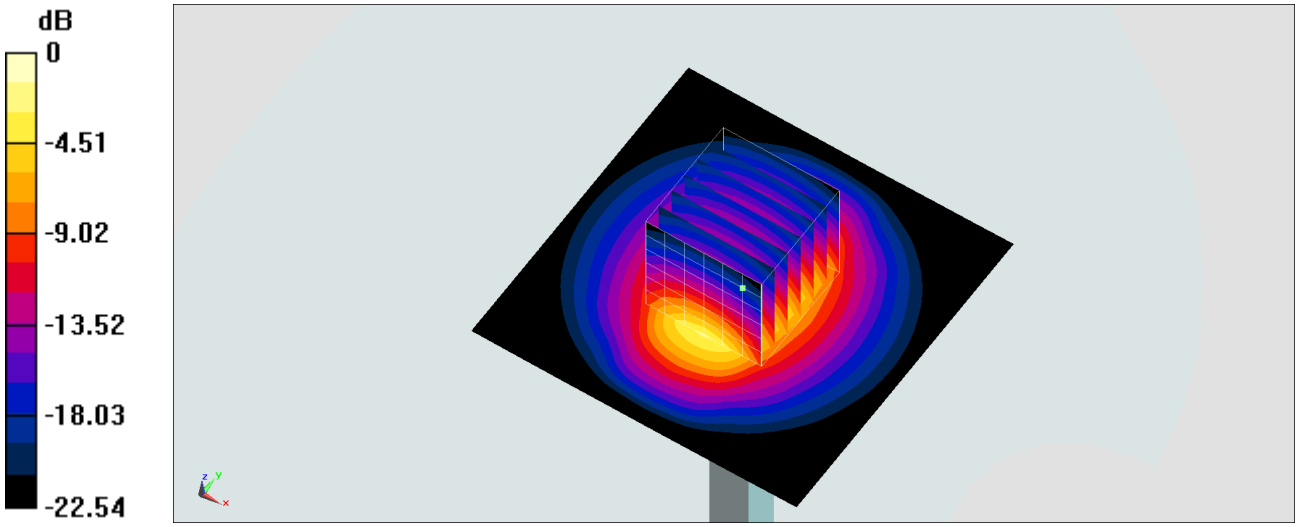

0 dB = 22.9 W/kg = 13.60 dBW/kg

System Check_Head_2600MHz

DUT: D2600V2-1008

Communication System: CW; Frequency: 2600 MHz;Duty Cycle: 1:1
Medium: HSL_2600_200528 Medium parameters used: f = 2600 MHz; σ = 1.956 S/m; ε_r = 38.001; ρ = 1000 kg/m^3
Ambient Temperature：23.6 ℃; Liquid Temperature：22.6 ℃

DASY5 Configuration:
- Probe: EX3DV4 - SN7590;ConvF(7.61, 7.61, 7.61) @ 2600 MHz;Calibrated: 2020/4/14
- Sensor-Surface: 1.4mm (Mechanical Surface Detection)
- Electronics: DAE4 Sn913; Calibrated: 2020/5/6
- Phantom: SAM_Left; Type: QD000P40CD; Serial: TP:1801
- Measurement SW: DASY52, Version 52.10 (4);SEMCAD X Version 14.6.14 (7483)

Pin=250mW/Area Scan (81x81x1): Interpolated grid: dx=1.200 mm, dy=1.200 mm
Maximum value of SAR (interpolated) = 24.1 W/kg

Pin=250mW/Zoom Scan (7x7x7)/Cube 0: Measurement grid: dx=5mm, dy=5mm, dz=5mm
Reference Value = 112.6 V/m; Power Drift = 0.15 dB
Peak SAR (extrapolated) = 36.9 W/kg
SAR(1 g) = 15 W/kg; SAR(10 g) = 6.56 W/kg
Maximum value of SAR (measured) = 24.2 W/kg

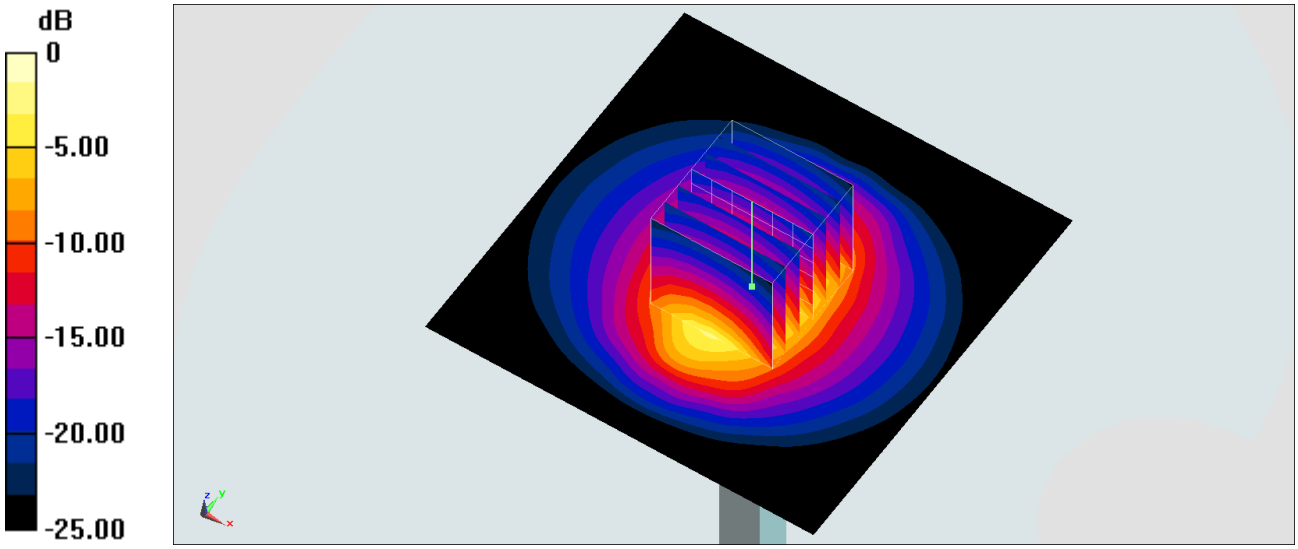

0 dB = 24.2 W/kg = 13.84 dBW/kg

System Check_Head_2600MHz

DUT: D2600V2-1008

Communication System: CW; Frequency: 2600 MHz;Duty Cycle: 1:1
Medium: HSL_2600_200608 Medium parameters used: f = 2600 MHz; σ = 1.933 S/m; ε_r = 38.982; ρ = 1000 kg/m^3
Ambient Temperature：23.6 ℃; Liquid Temperature：22.6 ℃

DASY5 Configuration:
- Probe: EX3DV4 - SN7590; ConvF(7.61, 7.61, 7.61) @ 2600 MHz; Calibrated: 2020/4/14
- Sensor-Surface: 1.4mm (Mechanical Surface Detection)
- Electronics: DAE4 Sn913; Calibrated: 2020/5/6
- Phantom: SAM_Left; Type: QD000P40CD; Serial: TP:1815
- Measurement SW: DASY52, Version 52.10 (4);SEMCAD X Version 14.6.14 (7483)

Pin=50mW/Area Scan (81x81x1): Interpolated grid: dx=1.200 mm, dy=1.200 mm
Maximum value of SAR (interpolated) = 4.59 W/kg

Pin=50mW/Zoom Scan (7x7x7)/Cube 0: Measurement grid: dx=5mm, dy=5mm, dz=5mm
Reference Value = 49.28 V/m; Power Drift = -0.17 dB
Peak SAR (extrapolated) = 5.56 W/kg
SAR(1 g) = 2.76 W/kg; SAR(10 g) = 1.26 W/kg
Maximum value of SAR (measured) = 4.58 W/kg

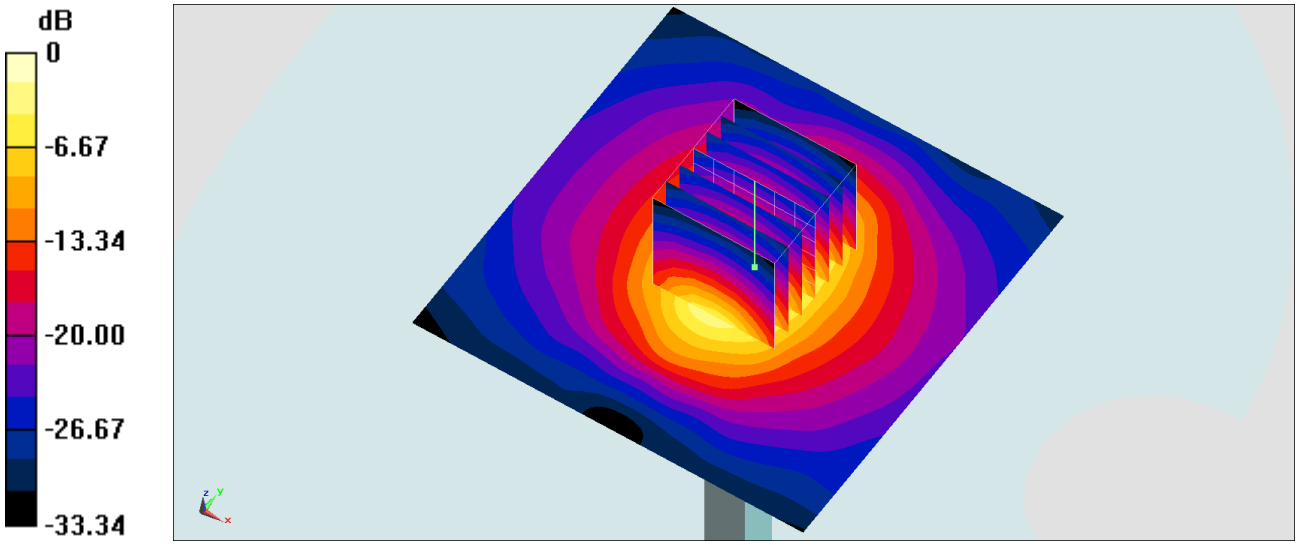

0 dB = 4.59 W/kg = 6.62 dBW/kg

System Check_Head_2600MHz

DUT: D2600V2-1008

Communication System: CW; Frequency: 2600 MHz;Duty Cycle: 1:1
Medium: HSL_2600_200613 Medium parameters used: f = 2600 MHz; σ = 1.944 S/m; ε_r = 38.151; ρ = 1000 kg/m^3
Ambient Temperature：23.5 ℃; Liquid Temperature：22.5 ℃

DASY5 Configuration:
- Probe: EX3DV4 - SN3925;ConvF(7.5, 7.5, 7.5) @ 2600 MHz;Calibrated: 2019/9/20
- Sensor-Surface: 1.4mm (Mechanical Surface Detection)
- Electronics: DAE4 Sn1311; Calibrated: 2019/8/27
- Phantom: SAM_Right; Type: QD000P40CD; Serial: 1884
- Measurement SW: DASY52, Version 52.10 (4);SEMCAD X Version 14.6.14 (7483)

Pin=250mW/Area Scan (71x71x1): Interpolated grid: dx=1.200 mm, dy=1.200 mm
Maximum value of SAR (interpolated) = 25.5 W/kg

Pin=250mW/Zoom Scan (7x7x7)/Cube 0: Measurement grid: dx=5mm, dy=5mm, dz=5mm
Reference Value = 115.7 V/m; Power Drift = 0.09 dB
Peak SAR (extrapolated) = 31.5 W/kg
SAR(1 g) = 14.6 W/kg; SAR(10 g) = 6.5 W/kg
Maximum value of SAR (measured) = 25.1 W/kg

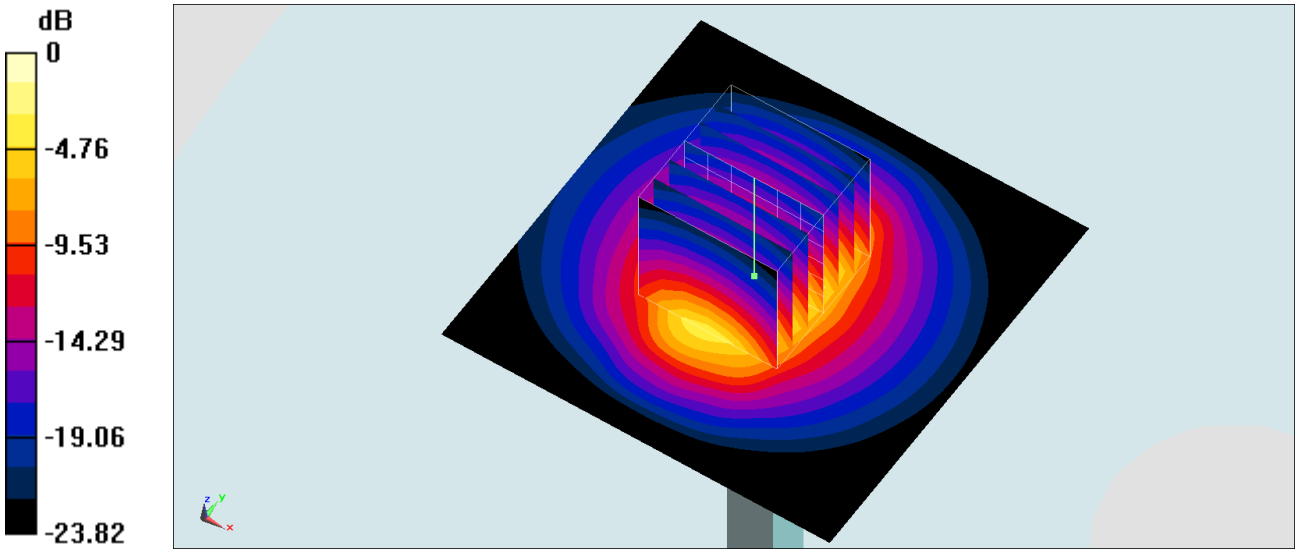

0 dB = 25.1 W/kg = 14.00 dBW/kg

System Check_Head_2600MHz

DUT: D2600V2-1008

Communication System: CW; Frequency: 2600 MHz;Duty Cycle: 1:1
Medium: HSL_2600_200626 Medium parameters used: f = 2600 MHz; σ = 1.953 S/m; ε_r = 38.758; ρ = 1000 kg/m^3
Ambient Temperature：23.2 ℃; Liquid Temperature：22.2 ℃

DASY5 Configuration:
- Probe: EX3DV4 - SN7590; ConvF(7.61, 7.61, 7.61) @ 2600 MHz; Calibrated: 2020/4/14
- Sensor-Surface: 1.4mm (Mechanical Surface Detection)
- Electronics: DAE3 Sn495; Calibrated: 2020/6/4
- Phantom: SAM_Left; Type: QD000P40CD; Serial: TP:1815
- Measurement SW: DASY52, Version 52.10 (4);SEMCAD X Version 14.6.14 (7483)

Pin=50mW/Area Scan (81x81x1): Interpolated grid: dx=1.200 mm, dy=1.200 mm
Maximum value of SAR (interpolated) = 4.74 W/kg

Pin=50mW/Zoom Scan (7x7x7)/Cube 0: Measurement grid: dx=5mm, dy=5mm, dz=5mm
Reference Value = 50.78 V/m; Power Drift = 0.04 dB
Peak SAR (extrapolated) = 5.92 W/kg
SAR(1 g) = 2.8 W/kg; SAR(10 g) = 1.29 W/kg
Maximum value of SAR (measured) = 4.82 W/kg

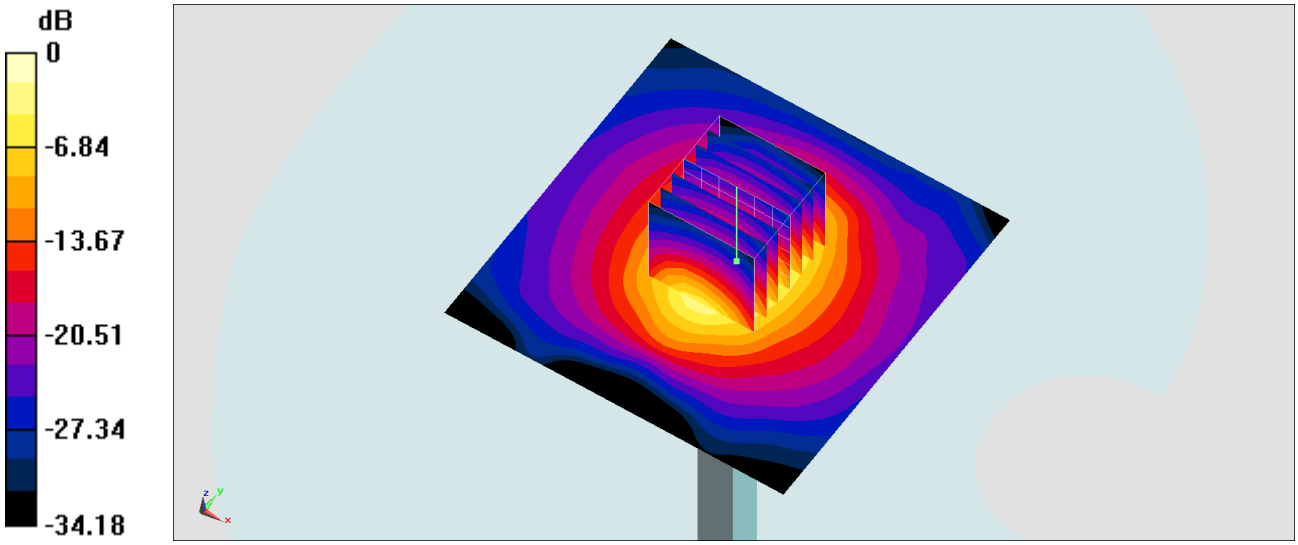

0 dB = 4.74 W/kg = 6.76 dBW/kg

System Check_Head_2600MHz

DUT: D2600V2-1008

Communication System: CW; Frequency: 2600 MHz;Duty Cycle: 1:1
Medium: HSL_2600_200627 Medium parameters used: f = 2600 MHz; σ = 1.957 S/m; ε_r = 38.474; ρ = 1000 kg/m^3
Ambient Temperature：23.6 ℃; Liquid Temperature：22.6 ℃

DASY5 Configuration:
- Probe: EX3DV4 - SN7590; ConvF(7.61, 7.61, 7.61) @ 2600 MHz; Calibrated: 2020/4/14
- Sensor-Surface: 1.4mm (Mechanical Surface Detection)
- Electronics: DAE3 Sn495; Calibrated: 2020/6/4
- Phantom: SAM_Left; Type: QD000P40CD; Serial: TP:1815
- Measurement SW: DASY52, Version 52.10 (4);SEMCAD X Version 14.6.14 (7483)

Pin=50mW/Area Scan (81x81x1): Interpolated grid: dx=1.200 mm, dy=1.200 mm
Maximum value of SAR (interpolated) = 4.75 W/kg

Pin=50mW/Zoom Scan (7x7x7)/Cube 0: Measurement grid: dx=5mm, dy=5mm, dz=5mm
Reference Value = 50.78 V/m; Power Drift = 0.04 dB
Peak SAR (extrapolated) = 5.94 W/kg
SAR(1 g) = 2.8 W/kg; SAR(10 g) = 1.3 W/kg
Maximum value of SAR (measured) = 4.83 W/kg

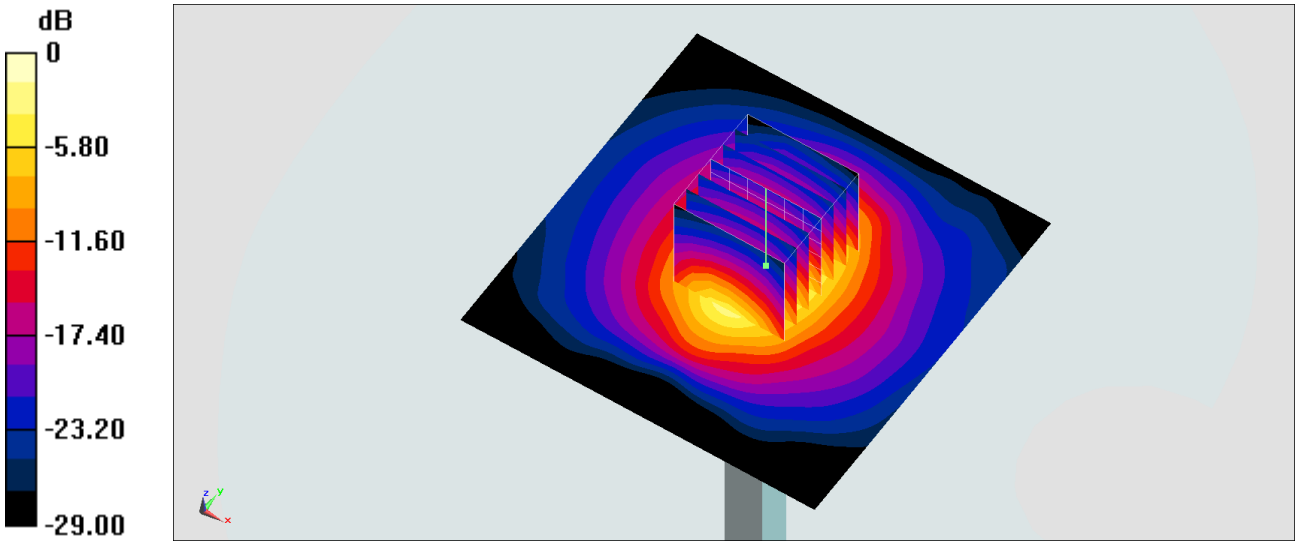

0 dB = 4.75 W/kg = 6.77 dBW/kg

System Check_Head_2600MHz

DUT: D2600V2-1008

Communication System: CW; Frequency: 2600 MHz;Duty Cycle: 1:1
Medium: HSL_2600_200628 Medium parameters used: f = 2600 MHz; σ = 1.976 S/m; ε_r = 38.076; ρ = 1000 kg/m^3
Ambient Temperature：23.5 ℃; Liquid Temperature：22.5 ℃

DASY5 Configuration:
- Probe: EX3DV4 - SN7590; ConvF(7.61, 7.61, 7.61) @ 2600 MHz; Calibrated: 2020/4/14
- Sensor-Surface: 1.4mm (Mechanical Surface Detection)
- Electronics: DAE3 Sn495; Calibrated: 2020/6/4
- Phantom: SAM_Left; Type: QD000P40CD; Serial: TP:1815
- Measurement SW: DASY52, Version 52.10 (4);SEMCAD X Version 14.6.14 (7483)

Pin=50mW/Area Scan (81x81x1): Interpolated grid: dx=1.200 mm, dy=1.200 mm
Maximum value of SAR (interpolated) = 4.80 W/kg

Pin=50mW/Zoom Scan (7x7x7)/Cube 0: Measurement grid: dx=5mm, dy=5mm, dz=5mm
Reference Value = 50.78 V/m; Power Drift = 0.04 dB
Peak SAR (extrapolated) = 5.99 W/kg
SAR(1 g) = 2.83 W/kg; SAR(10 g) = 1.31 W/kg
Maximum value of SAR (measured) = 4.88 W/kg

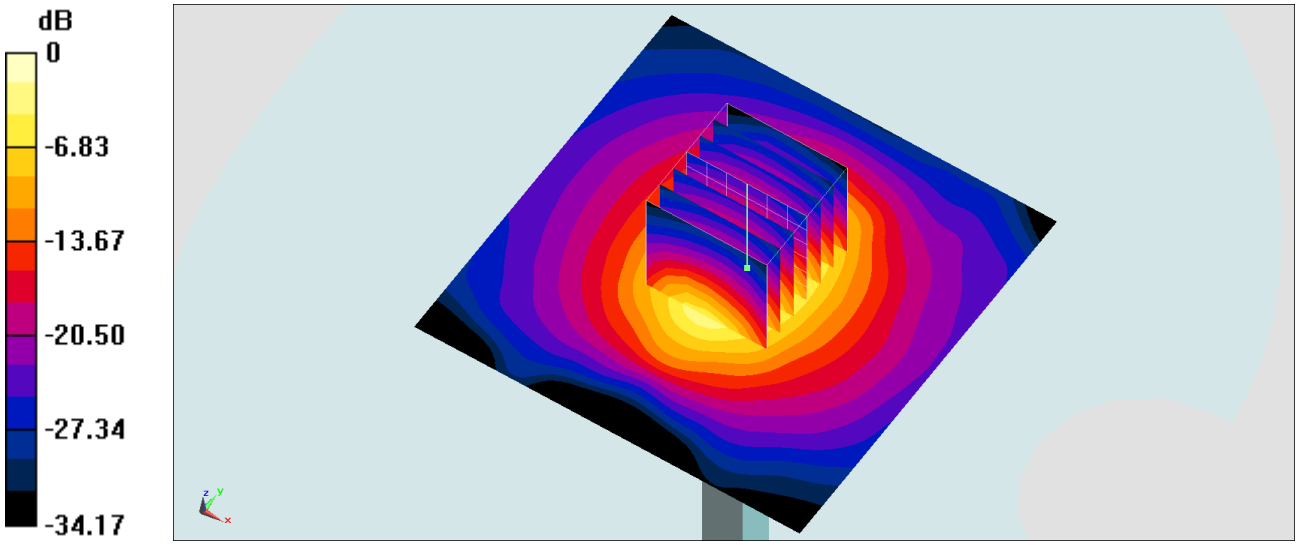

0 dB = 4.80 W/kg = 6.81 dBW/kg

System Check_Head_2600MHz

DUT: D2600V2-1008

Communication System: CW; Frequency: 2600 MHz;Duty Cycle: 1:1
Medium: HSL_2600_200629 Medium parameters used: f = 2600 MHz; σ = 1.981 S/m; ε_r = 37.646; ρ = 1000 kg/m^3
Ambient Temperature：23.5 ℃; Liquid Temperature：22.5 ℃

DASY5 Configuration:
- Probe: EX3DV4 - SN7590; ConvF(7.61, 7.61, 7.61) @ 2600 MHz; Calibrated: 2020/4/14
- Sensor-Surface: 1.4mm (Mechanical Surface Detection)
- Electronics: DAE3 Sn495; Calibrated: 2020/6/4
- Phantom: SAM_Left; Type: QD000P40CD; Serial: TP:1815
- Measurement SW: DASY52, Version 52.10 (4);SEMCAD X Version 14.6.14 (7483)

Pin=50mW/Area Scan (81x81x1): Interpolated grid: dx=1.200 mm, dy=1.200 mm
Maximum value of SAR (interpolated) = 4.81 W/kg

Pin=50mW/Zoom Scan (7x7x7)/Cube 0: Measurement grid: dx=5mm, dy=5mm, dz=5mm
Reference Value = 50.78 V/m; Power Drift = 0.04 dB
Peak SAR (extrapolated) = 6.01 W/kg
SAR(1 g) = 2.84 W/kg; SAR(10 g) = 1.31 W/kg
Maximum value of SAR (measured) = 4.89 W/kg

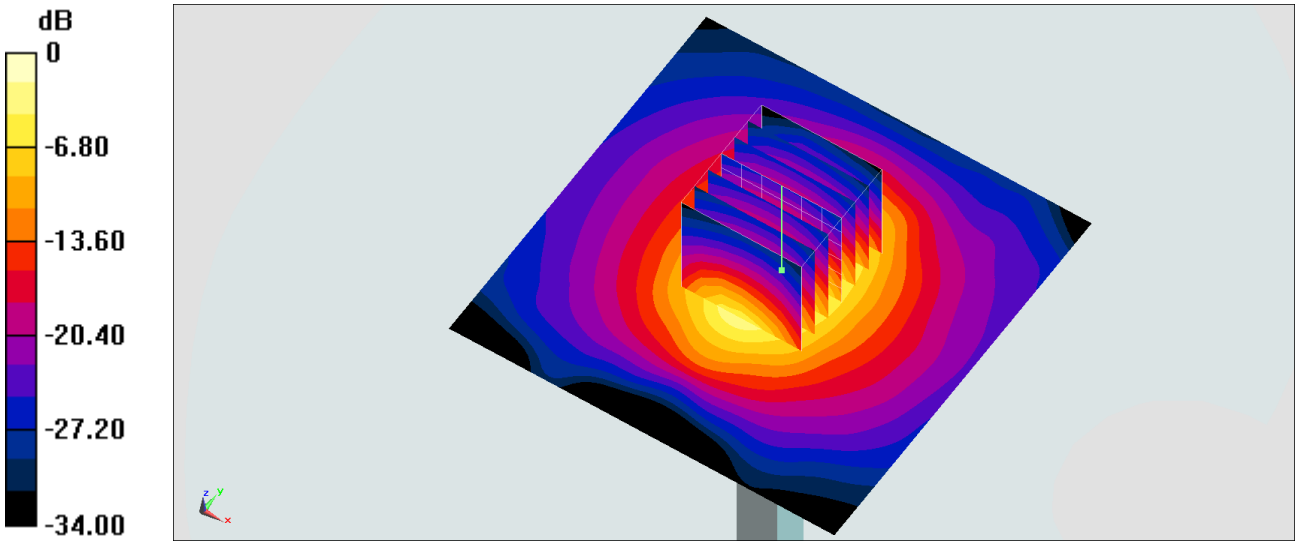

0 dB = 4.81 W/kg = 6.82 dBW/kg

System Check_Head_3500MHz

DUT: D3500V2-1014

Communication System: CW; Frequency: 3500 MHz;Duty Cycle: 1:1
Medium: HSL_3500_200628 Medium parameters used: f = 3500 MHz; σ = 3.047 S/m; ε_r = 38.225; ρ = 1000 kg/m^3
Ambient Temperature：23.5 ℃; Liquid Temperature：22.5 ℃

DASY5 Configuration:
- Probe: EX3DV4 - SN3931;ConvF(7.05, 7.05, 7.05) @ 3500 MHz;Calibrated: 2019/9/26
- Sensor-Surface: 1.4mm (Mechanical Surface Detection)
- Electronics: DAE4 Sn1424; Calibrated: 2020/1/24
- Phantom: SAM_Mid; Type: QD000P40CD; Serial: TP:1801
- Measurement SW: DASY52, Version 52.10 (4);SEMCAD X Version 14.6.14 (7483)

Pin=100mW/Area Scan (61x61x1): Interpolated grid: dx=1.200 mm, dy=1.200 mm
Maximum value of SAR (interpolated) = 13.9 W/kg

Pin=100mW/Zoom Scan (7x7x7)/Cube 0: Measurement grid: dx=5mm, dy=5mm, dz=1.4mm
Reference Value = 70.19 V/m; Power Drift = 0.09 dB
Peak SAR (extrapolated) = 18.6 W/kg
SAR(1 g) = 6.93 W/kg; SAR(10 g) = 2.57 W/kg
Maximum value of SAR (measured) = 13.6 W/kg

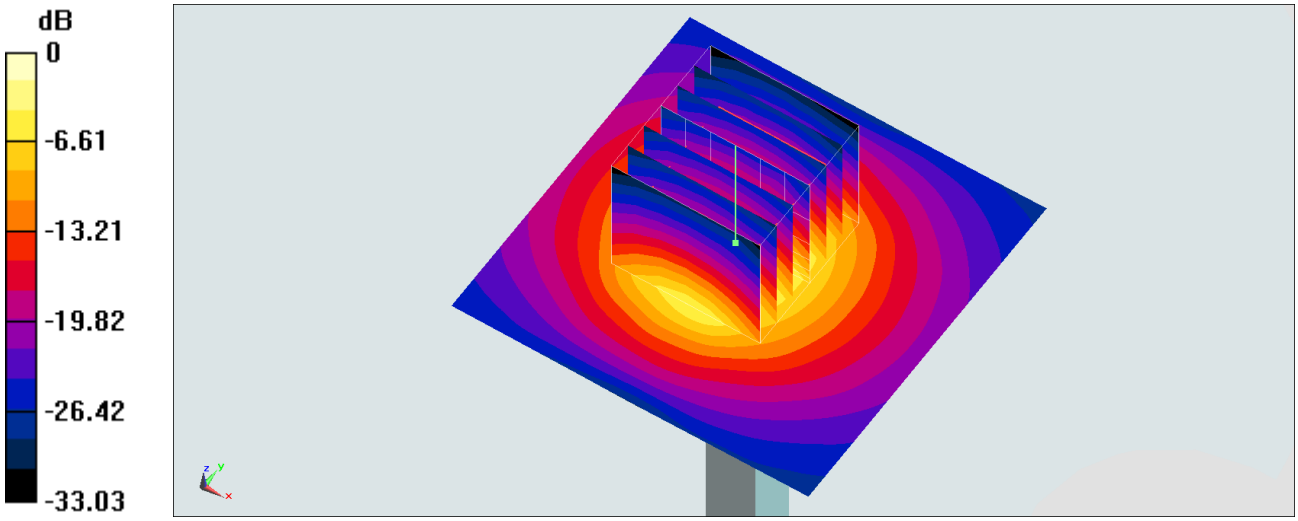

0 dB = 13.6 W/kg = 11.34 dBW/kg

System Check_Head_3700MHz

DUT: D3700V2-1006

Communication System: CW; Frequency: 3700 MHz;Duty Cycle: 1:1
Medium: HSL_3700_200628 Medium parameters used: f = 3700 MHz; σ = 3.2 S/m; ε_r = 37.948; ρ = 1000 kg/m^3
Ambient Temperature：23.5 ℃; Liquid Temperature：22.5 ℃

DASY5 Configuration:
- Probe: EX3DV4 - SN3931;ConvF(6.97, 6.97, 6.97) @ 3700 MHz;Calibrated: 2019/9/26
- Sensor-Surface: 1.4mm (Mechanical Surface Detection)
- Electronics: DAE4 Sn1424; Calibrated: 2020/1/24
- Phantom: SAM_Mid; Type: QD000P40CD; Serial: TP:1801
- Measurement SW: DASY52, Version 52.10 (4);SEMCAD X Version 14.6.14 (7483)

Pin=100mW/Area Scan (61x61x1): Interpolated grid: dx=1.200 mm, dy=1.200 mm
Maximum value of SAR (interpolated) = 13.8 W/kg

Pin=100mW/Zoom Scan (7x7x7)/Cube 0: Measurement grid: dx=5mm, dy=5mm, dz=1.4mm
Reference Value = 64.90 V/m; Power Drift = -0.05 dB
Peak SAR (extrapolated) = 19.2 W/kg
SAR(1 g) = 6.48 W/kg; SAR(10 g) = 2.31 W/kg
Maximum value of SAR (measured) = 13.3 W/kg

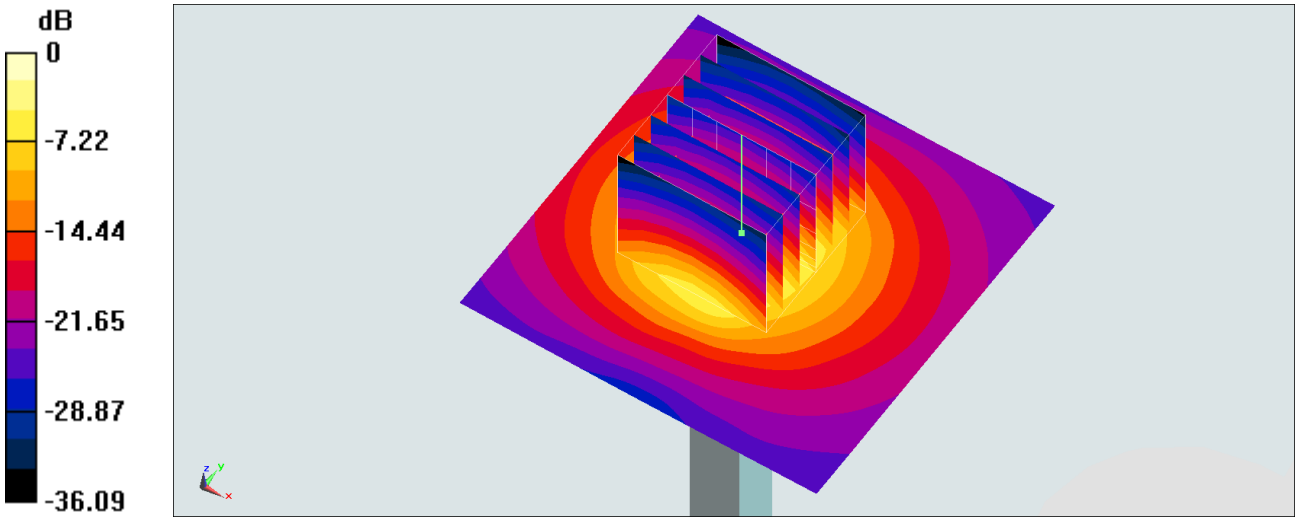

0 dB = 13.3 W/kg = 11.24 dBW/kg

System Check_Head_5250MHz

DUT: D5GHzV2-1128

Communication System: CW; Frequency: 5250 MHz;Duty Cycle: 1:1
Medium: HSL_5G_200626 Medium parameters used : f = 5250 MHz; σ = 4.774 S/m; ε_r = 36.84; ρ = 1000 kg/m^3
Ambient Temperature：23.2 ℃; Liquid Temperature：22.2 ℃

DASY5 Configuration:
- Probe: EX3DV4 - SN3931; ConvF(5.08, 5.08, 5.08) @ 5250 MHz; Calibrated: 2019/9/26
- Sensor-Surface: 1.4mm (Mechanical Surface Detection)
- Electronics: DAE4 Sn1424; Calibrated: 2020/1/24
- Phantom: SAM_Left; Type: QD000P40CD; Serial: 1719
- Measurement SW: DASY52, Version 52.10 (4);SEMCAD X Version 14.6.14 (7483)

Pin=100mW/Area Scan (71x71x1): Interpolated grid: dx=1.000 mm, dy=1.000 mm
Maximum value of SAR (interpolated) = 20.0 W/kg

Pin=100mW/Zoom Scan (7x7x7)/Cube 0: Measurement grid: dx=4mm, dy=4mm, dz=1.4mm
Reference Value = 70.78 V/m; Power Drift = 0.05 dB
Peak SAR (extrapolated) = 33.5 W/kg
SAR(1 g) = 8.33 W/kg; SAR(10 g) = 2.38 W/kg
Maximum value of SAR (measured) = 21.0 W/kg

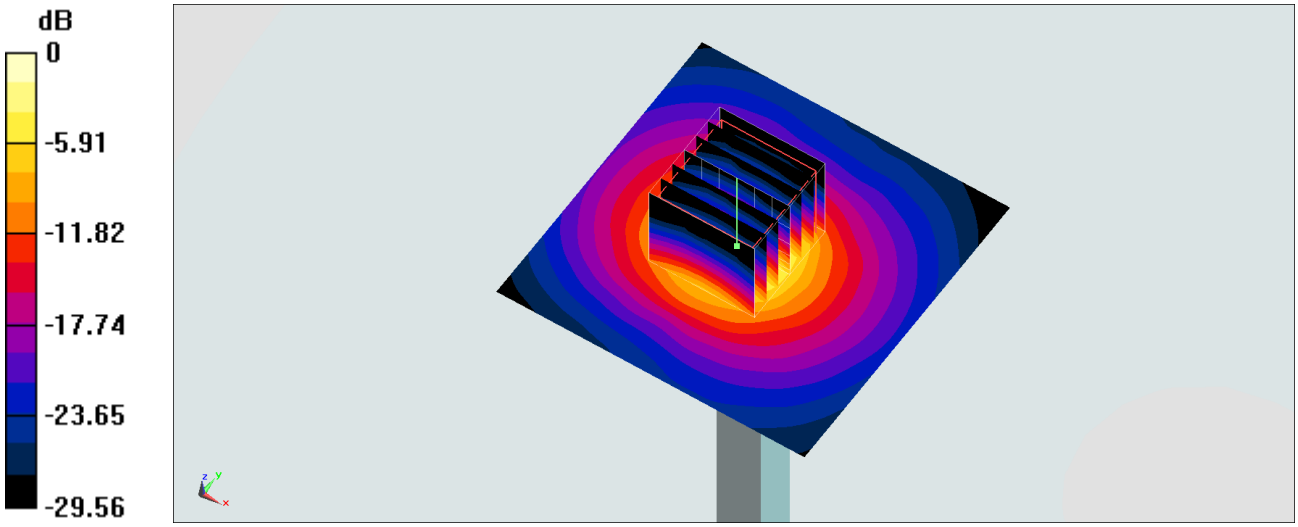

0 dB = 21.0 W/kg = 13.22 dBW/kg

System Check_Head_5250MHz

DUT: D5GHzV2-1128

Communication System: CW; Frequency: 5250 MHz;Duty Cycle: 1:1
Medium: HSL_5G_200627 Medium parameters used : f = 5250 MHz; σ = 4.639 S/m; ε_r = 35.875; ρ = 1000 kg/m^3
Ambient Temperature：23.2 ℃; Liquid Temperature：22.2 ℃

DASY5 Configuration:
- Probe: EX3DV4 - SN3931; ConvF(5.08, 5.08, 5.08) @ 5250 MHz; Calibrated: 2019/9/26
- Sensor-Surface: 1.4mm (Mechanical Surface Detection)
- Electronics: DAE4 Sn1424; Calibrated: 2020/1/24
- Phantom: SAM_Left; Type: QD000P40CD; Serial: 1719
- Measurement SW: DASY52, Version 52.10 (4);SEMCAD X Version 14.6.14 (7483)

Pin=100mW/Area Scan (71x71x1): Interpolated grid: dx=1.000 mm, dy=1.000 mm
Maximum value of SAR (interpolated) = 18.7 W/kg

Pin=100mW/Zoom Scan (7x7x7)/Cube 0: Measurement grid: dx=4mm, dy=4mm, dz=1.4mm
Reference Value = 71.70 V/m; Power Drift = -0.02 dB
Peak SAR (extrapolated) = 31.5 W/kg
SAR(1 g) = 7.76 W/kg; SAR(10 g) = 2.24 W/kg
Maximum value of SAR (measured) = 19.6 W/kg

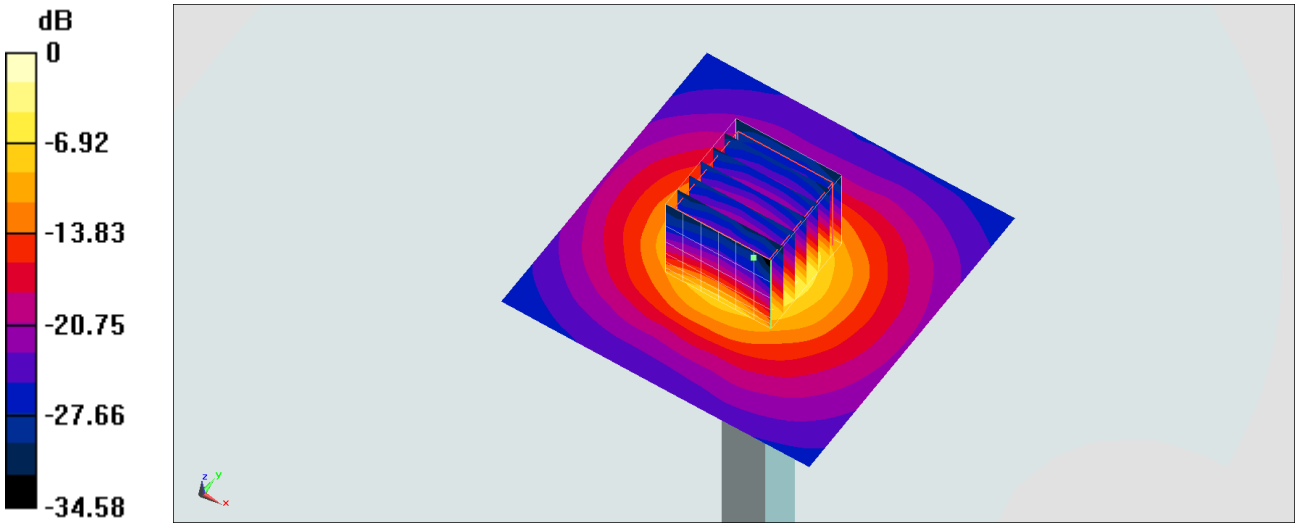

0 dB = 19.6 W/kg = 12.92 dBW/kg

System Check_Head_5250MHz

DUT: D5GHzV2-1128

Communication System: CW; Frequency: 5250 MHz;Duty Cycle: 1:1
Medium: HSL_5G_200630 Medium parameters used : f = 5250 MHz; σ = 4.66 S/m; ε_r = 36.379; ρ = 1000 kg/m^3
Ambient Temperature：23.2 ℃; Liquid Temperature：22.2 ℃

DASY5 Configuration:
- Probe: EX3DV4 - SN3931; ConvF(5.08, 5.08, 5.08) @ 5250 MHz; Calibrated: 2019/9/26
- Sensor-Surface: 1.4mm (Mechanical Surface Detection)
- Electronics: DAE4 Sn1424; Calibrated: 2020/1/24
- Phantom: SAM_Left; Type: QD000P40CD; Serial: 1719
- Measurement SW: DASY52, Version 52.10 (4);SEMCAD X Version 14.6.14 (7483)

Pin=100mW/Area Scan (71x71x1): Interpolated grid: dx=1.000 mm, dy=1.000 mm
Maximum value of SAR (interpolated) = 18.8 W/kg

Pin=100mW/Zoom Scan (7x7x7)/Cube 0: Measurement grid: dx=4mm, dy=4mm, dz=1.4mm
Reference Value = 71.70 V/m; Power Drift = -0.02 dB
Peak SAR (extrapolated) = 31.7 W/kg
SAR(1 g) = 7.79 W/kg; SAR(10 g) = 2.25 W/kg
Maximum value of SAR (measured) = 19.7 W/kg

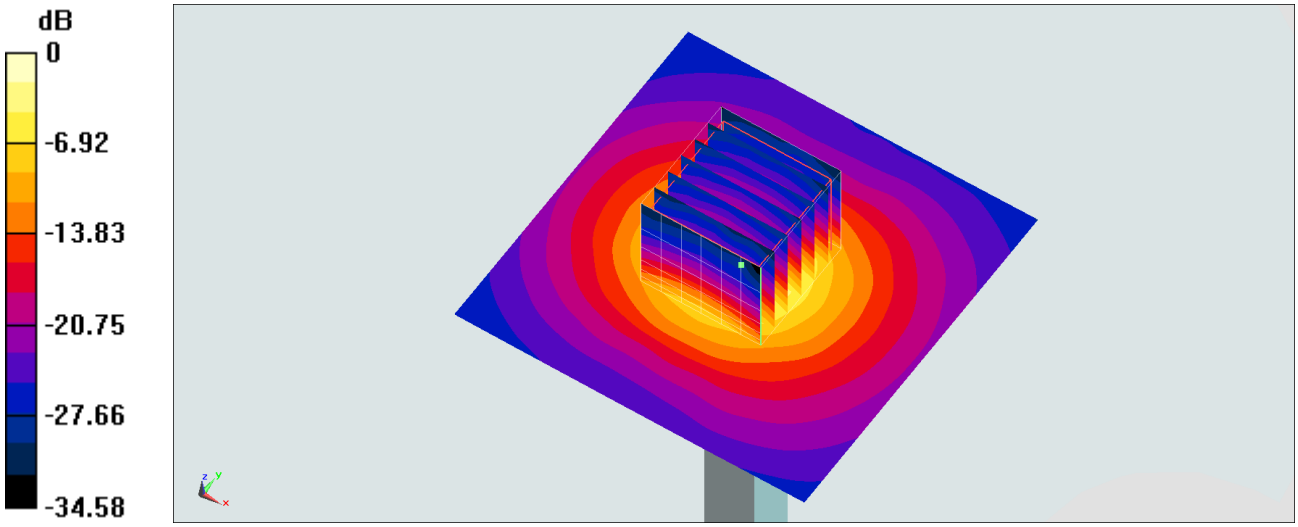

0 dB = 19.7 W/kg = 12.94 dBW/kg

System Check_Head_5600MHz

DUT: D5GHzV2-1128

Communication System: CW; Frequency: 5600 MHz;Duty Cycle: 1:1
Medium: HSL_5G_200626 Medium parameters used: f = 5600 MHz; σ = 5.113 S/m; ε_r = 36.354; ρ = 1000 kg/m^3
Ambient Temperature：23.2 ℃; Liquid Temperature：22.2 ℃

DASY5 Configuration:
- Probe: EX3DV4 - SN3931; ConvF(4.49, 4.49, 4.49) @ 5600 MHz; Calibrated: 2019/9/26
- Sensor-Surface: 1.4mm (Mechanical Surface Detection)
- Electronics: DAE4 Sn1424; Calibrated: 2020/1/24
- Phantom: SAM_Left; Type: QD000P40CD; Serial: 1719
- Measurement SW: DASY52, Version 52.10 (4);SEMCAD X Version 14.6.14 (7483)

Pin=100mW/Area Scan (71x71x1): Interpolated grid: dx=1.000 mm, dy=1.000 mm
Maximum value of SAR (interpolated) = 23.1 W/kg

Pin=100mW/Zoom Scan (7x7x7)/Cube 0: Measurement grid: dx=4mm, dy=4mm, dz=1.4mm
Reference Value = 72.19 V/m; Power Drift = -0.01 dB
Peak SAR (extrapolated) = 38.0 W/kg
SAR(1 g) = 8.53 W/kg; SAR(10 g) = 2.42 W/kg
Maximum value of SAR (measured) = 22.3 W/kg

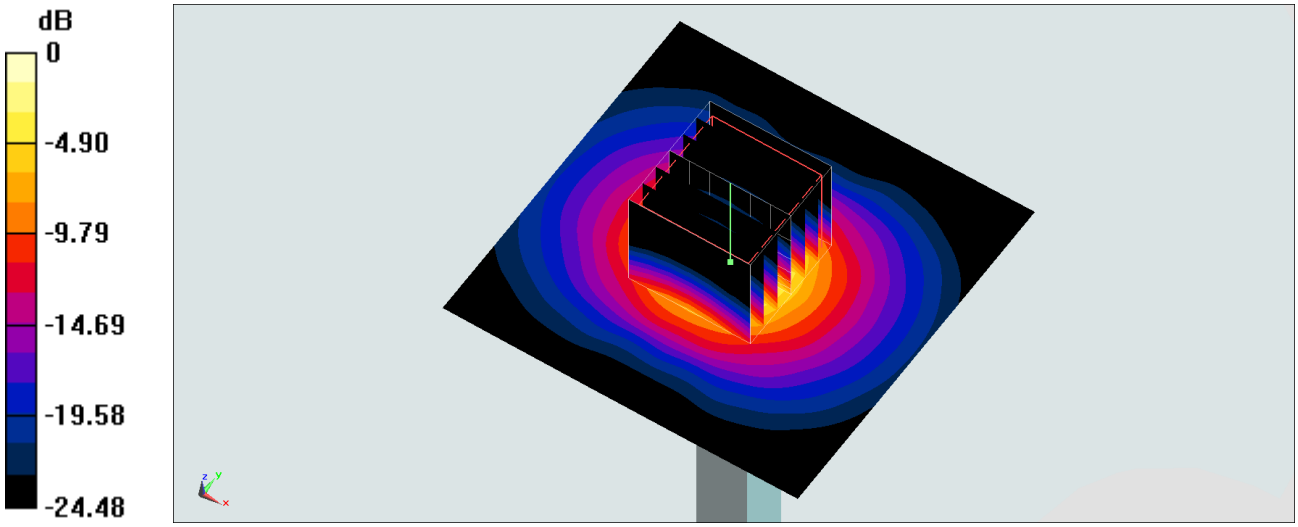

0 dB = 22.3 W/kg = 13.48 dBW/kg

System Check_Head_5600MHz

DUT: D5GHzV2-1128

Communication System: CW; Frequency: 5600 MHz;Duty Cycle: 1:1
Medium: HSL_5G_200701 Medium parameters used: f = 5600 MHz; σ = 4.848 S/m; ε_r = 35.261; ρ = 1000 kg/m^3
Ambient Temperature：23.2 ℃; Liquid Temperature：22.2 ℃

DASY5 Configuration:
- Probe: EX3DV4 - SN3931; ConvF(4.49, 4.49, 4.49) @ 5600 MHz; Calibrated: 2019/9/26
- Sensor-Surface: 1.4mm (Mechanical Surface Detection)
- Electronics: DAE4 Sn1424; Calibrated: 2020/1/24
- Phantom: SAM_Left; Type: QD000P40CD; Serial: 1719
- Measurement SW: DASY52, Version 52.10 (4);SEMCAD X Version 14.6.14 (7483)

Pin=100mW/Area Scan (71x71x1): Interpolated grid: dx=1.000 mm, dy=1.000 mm
Maximum value of SAR (interpolated) = 21.1 W/kg

Pin=100mW/Zoom Scan (7x7x7)/Cube 0: Measurement grid: dx=4mm, dy=4mm, dz=1.4mm
Reference Value = 71.87 V/m; Power Drift = -0.03 dB
Peak SAR (extrapolated) = 36.9 W/kg
SAR(1 g) = 8.39 W/kg; SAR(10 g) = 2.35 W/kg
Maximum value of SAR (measured) = 22.0 W/kg

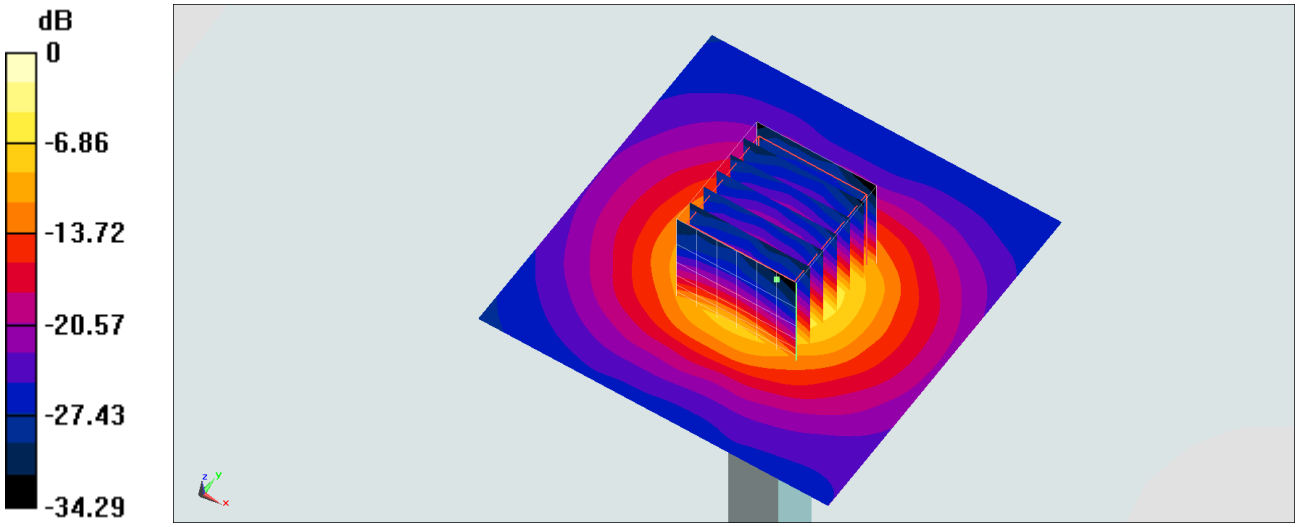

0 dB = 22.0 W/kg = 13.42 dBW/kg

System Check_Head_5750MHz

DUT: D5GHzV2-1128

Communication System: CW; Frequency: 5750 MHz;Duty Cycle: 1:1
Medium: HSL_5G_200626 Medium parameters used: f = 5750 MHz; σ = 5.263 S/m; ε_r = 36.139; ρ = 1000 kg/m^3
Ambient Temperature：23.2 ℃; Liquid Temperature：22.2 ℃

DASY5 Configuration:
- Probe: EX3DV4 - SN3931; ConvF(4.75, 4.75, 4.75) @ 5750 MHz; Calibrated: 2019/9/26
- Sensor-Surface: 1.4mm (Mechanical Surface Detection)
- Electronics: DAE4 Sn1424; Calibrated: 2020/1/24
- Phantom: SAM_Left; Type: QD000P40CD; Serial: 1719
- Measurement SW: DASY52, Version 52.10 (4);SEMCAD X Version 14.6.14 (7483)

Pin=100mW/Area Scan (71x71x1): Interpolated grid: dx=1.000 mm, dy=1.000 mm
Maximum value of SAR (interpolated) = 19.5 W/kg

Pin=100mW/Zoom Scan (7x7x7)/Cube 0: Measurement grid: dx=4mm, dy=4mm, dz=1.4mm
Reference Value = 67.27 V/m; Power Drift = -0.06 dB
Peak SAR (extrapolated) = 36.2 W/kg
SAR(1 g) = 7.82 W/kg; SAR(10 g) = 2.2 W/kg
Maximum value of SAR (measured) = 21.0 W/kg

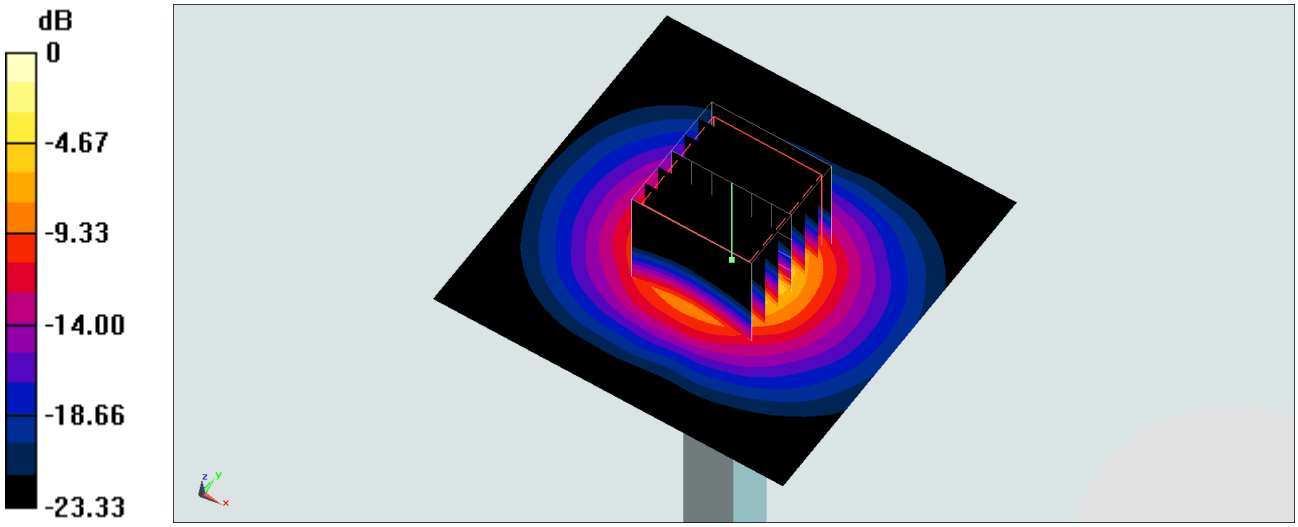

0 dB = 21.0 W/kg = 13.22 dBW/kg

System Check_Head_5750MHz

DUT: D5GHzV2-1128

Communication System: CW; Frequency: 5750 MHz;Duty Cycle: 1:1
Medium: HSL_5G_200702 Medium parameters used: f = 5750 MHz; σ = 5.442 S/m; ε_r = 36.882; ρ = 1000 kg/m^3
Ambient Temperature：23.2 ℃; Liquid Temperature：22.2 ℃

DASY5 Configuration:
- Probe: EX3DV4 - SN3931; ConvF(4.75, 4.75, 4.75) @ 5750 MHz; Calibrated: 2019/9/26
- Sensor-Surface: 1.4mm (Mechanical Surface Detection)
- Electronics: DAE4 Sn1424; Calibrated: 2020/1/24
- Phantom: SAM_Left; Type: QD000P40CD; Serial: 1719
- Measurement SW: DASY52, Version 52.10 (4);SEMCAD X Version 14.6.14 (7483)

Pin=100mW/Area Scan (71x71x1): Interpolated grid: dx=1.000 mm, dy=1.000 mm
Maximum value of SAR (interpolated) = 20.2 W/kg

Pin=100mW/Zoom Scan (7x7x7)/Cube 0: Measurement grid: dx=4mm, dy=4mm, dz=1.4mm
Reference Value = 67.27 V/m; Power Drift = -0.03 dB
Peak SAR (extrapolated) = 37.4 W/kg
SAR(1 g) = 8.09 W/kg; SAR(10 g) = 2.27 W/kg
Maximum value of SAR (measured) = 21.7 W/kg

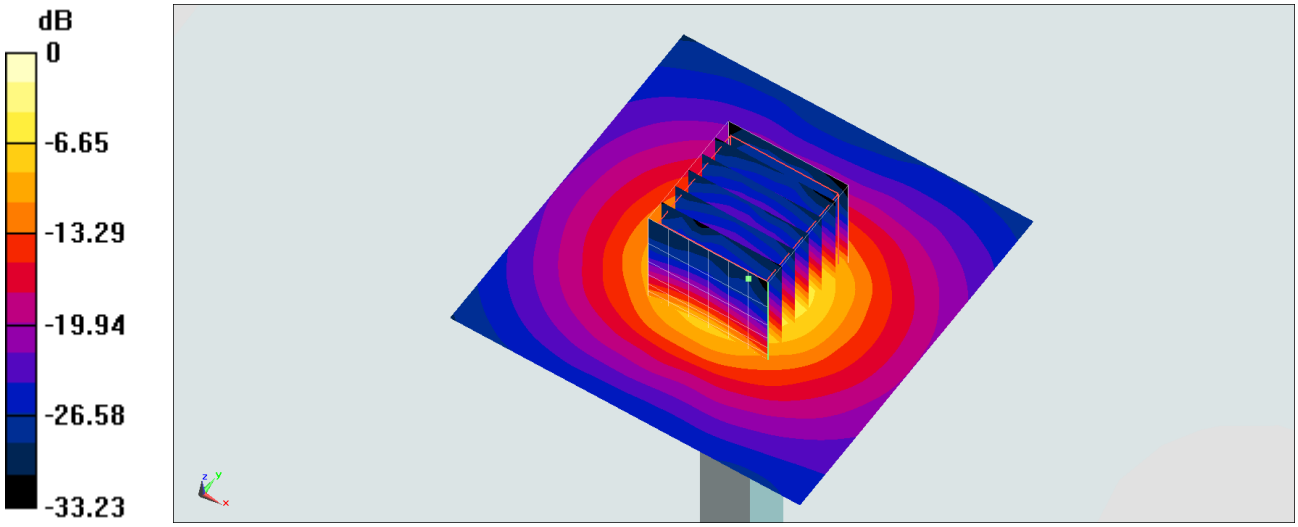

0 dB = 21.7 W/kg = 13.36 dBW/kg