System Check_Head_750MHz

DUT: D750V3-1012

Communication System: CW; Frequency: 750 MHz;Duty Cycle: 1:1
Medium: HSL_750_220412 Medium parameters used: f = 750 MHz; σ = 0.888 S/m; ε_r = 42.3; ρ = 1000 kg/m^3
Ambient Temperature：23.6 ℃; Liquid Temperature：22.6 ℃

DASY5 Configuration:
- Probe: EX3DV4 - SN3931; ConvF(10.36, 10.36, 10.36) @ 750 MHz; Calibrated: 2021/10/21
- Sensor-Surface: 1.4mm (Mechanical Surface Detection)
- Electronics: DAE4 Sn1399; Calibrated: 2022/2/28
- Phantom: SAM-Middle; Type: SAM; Serial: TP-1503
- Measurement SW: DASY52, Version 52.10 (4);SEMCAD X Version 14.6.14 (7483)

Pin=50mW/Area Scan (61x61x1): Interpolated grid: dx=1.500 mm, dy=1.500 mm
Maximum value of SAR (interpolated) = 0.529 W/kg

Pin=50mW/Zoom Scan (5x5x7)/Cube 0: Measurement grid: dx=8mm, dy=8mm, dz=5mm
Reference Value = 25.11 V/m; Power Drift = -0.02 dB
Peak SAR (extrapolated) = 0.585 W/kg
SAR(1 g) = 0.399 W/kg; SAR(10 g) = 0.265 W/kg
Maximum value of SAR (measured) = 0.524 W/kg

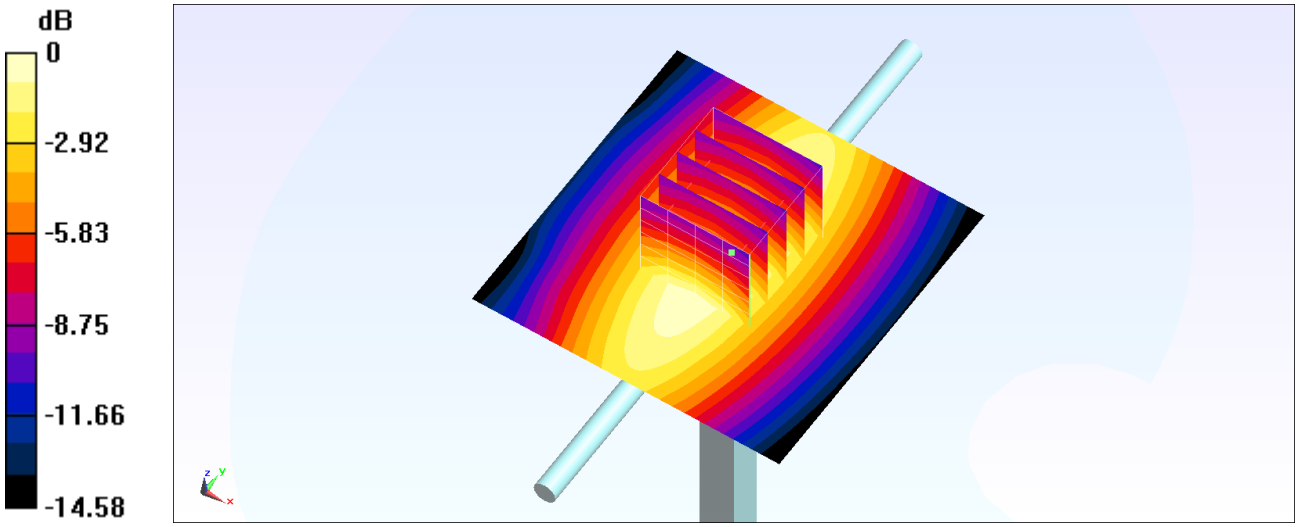

0 dB = 0.524 W/kg = -2.81 dBW/kg

System Check_Head_750MHz

DUT: D750V3-1012

Communication System: CW; Frequency: 750 MHz;Duty Cycle: 1:1
Medium: HSL_750_220416 Medium parameters used: f = 750 MHz; σ = 0.89 S/m; ε_r = 42.135; ρ = 1000 kg/m^3
Ambient Temperature：23.6 ℃; Liquid Temperature：22.6 ℃

DASY5 Configuration:
- Probe: EX3DV4 - SN3931; ConvF(10.36, 10.36, 10.36) @ 750 MHz; Calibrated: 2021/10/21
- Sensor-Surface: 1.4mm (Mechanical Surface Detection)
- Electronics: DAE4 Sn1399; Calibrated: 2022/2/28
- Phantom: SAM-Middle; Type: SAM; Serial: TP-1503
- Measurement SW: DASY52, Version 52.10 (4);SEMCAD X Version 14.6.14 (7483)

Pin=50mW/Area Scan (61x61x1): Interpolated grid: dx=1.500 mm, dy=1.500 mm
Maximum value of SAR (interpolated) = 0.529 W/kg
Pin=50mW/Zoom Scan (5x5x7)/Cube 0: Measurement grid: dx=8mm, dy=8mm, dz=5mm
Reference Value = 25.62 V/m; Power Drift = -0.11 dB
Peak SAR (extrapolated) = 0.592 W/kg
SAR(1 g) = 0.400 W/kg; SAR(10 g) = 0.265 W/kg
Maximum value of SAR (measured) = 0.529 W/kg

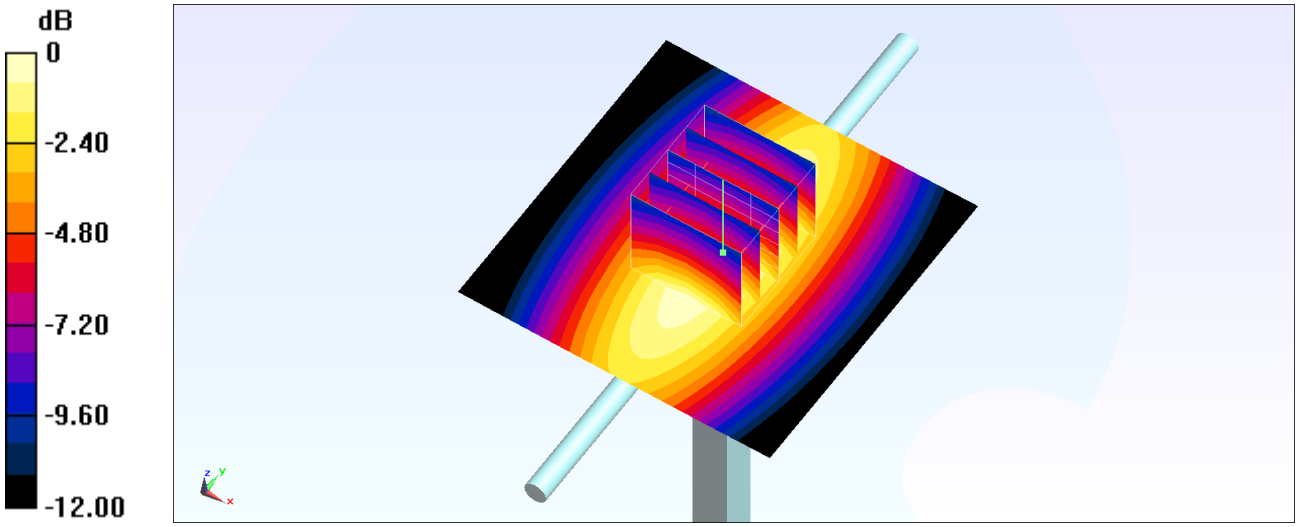

0 dB = 0.529 W/kg = -2.77 dBW/kg

System Check_Head_750MHz

DUT: D750V3-1012

Communication System: CW; Frequency: 750 MHz;Duty Cycle: 1:1
Medium: HSL_750_220502 Medium parameters used: f = 750 MHz; σ = 0.89 S/m; ε_r = 43.009; ρ = 1000 kg/m^3
Ambient Temperature：23.5 ℃; Liquid Temperature：22.5 ℃

DASY5 Configuration:
- Probe: EX3DV4 - SN3931; ConvF(10.36, 10.36, 10.36) @ 750 MHz; Calibrated: 2021/10/21
- Sensor-Surface: 1.4mm (Mechanical Surface Detection)
- Electronics: DAE4 Sn1399; Calibrated: 2022/2/28
- Phantom: SAM-Middle; Type: SAM; Serial: TP-1503
- Measurement SW: DASY52, Version 52.10 (4);SEMCAD X Version 14.6.14 (7483)

Pin=50mW/Area Scan (61x61x1): Interpolated grid: dx=1.500 mm, dy=1.500 mm
Maximum value of SAR (interpolated) = 0.471 W/kg

Pin=50mW/Zoom Scan (5x5x7)/Cube 0: Measurement grid: dx=8mm, dy=8mm, dz=5mm
Reference Value = 23.47 V/m; Power Drift = 0.15 dB
Peak SAR (extrapolated) = 0.511 W/kg
SAR(1 g) = 0.397 W/kg; SAR(10 g) = 0.260 W/kg
Maximum value of SAR (measured) = 0.466 W/kg

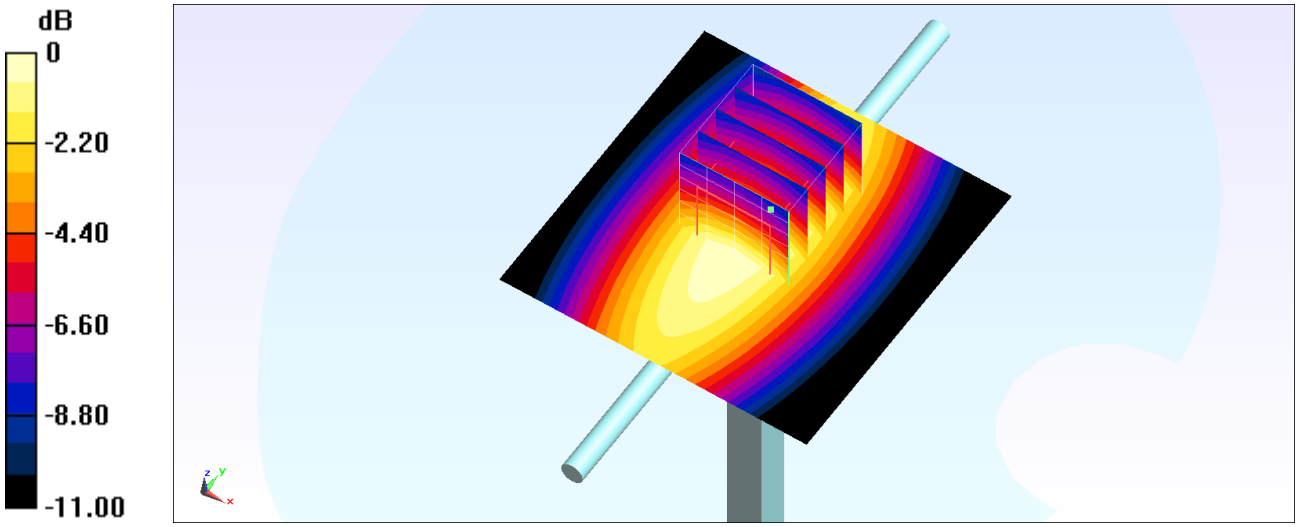

0 dB = 0.466 W/kg = -3.32 dBW/kg

System Check_Head_750MHz

DUT: D750V3-1012

Communication System: CW; Frequency: 750 MHz;Duty Cycle: 1:1
Medium: HSL_750_220503 Medium parameters used: f = 750 MHz; σ = 0.882 S/m; ε_r = 42.167; ρ = 1000 kg/m^3
Ambient Temperature：23.6 ℃; Liquid Temperature：22.6 ℃

DASY5 Configuration:
- Probe: EX3DV4 - SN3931; ConvF(10.36, 10.36, 10.36) @ 750 MHz; Calibrated: 2021/10/21
- Sensor-Surface: 1.4mm (Mechanical Surface Detection)
- Electronics: DAE4 Sn1399; Calibrated: 2022/2/28
- Phantom: SAM-Middle; Type: SAM; Serial: TP-1503
- Measurement SW: DASY52, Version 52.10 (4);SEMCAD X Version 14.6.14 (7483)

Pin=50mW/Area Scan (61x61x1): Interpolated grid: dx=1.500 mm, dy=1.500 mm
Maximum value of SAR (interpolated) = 0.540 W/kg
Pin=50mW/Zoom Scan (5x5x7)/Cube 0: Measurement grid: dx=8mm, dy=8mm, dz=5mm
Reference Value = 22.49 V/m; Power Drift = 0.16 dB
Peak SAR (extrapolated) = 0.682 W/kg
SAR(1 g) = 0.420 W/kg; SAR(10 g) = 0.276 W/kg
Maximum value of SAR (measured) = 0.553 W/kg

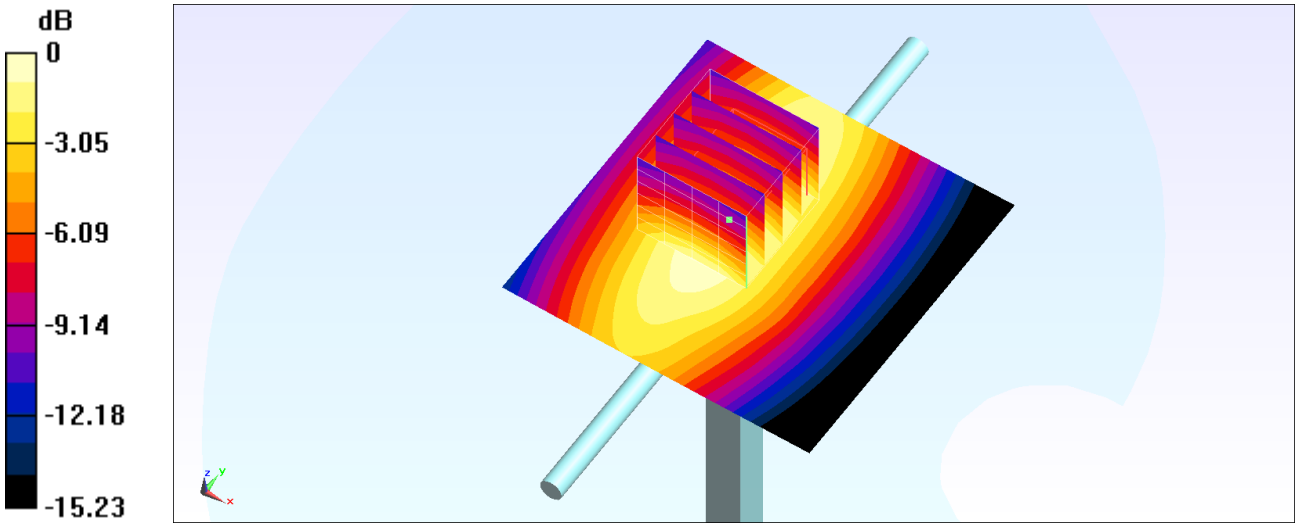

0 dB = 0.553 W/kg = -2.57 dBW/kg

System Check_Head_750MHz

DUT: D750V3-1012

Communication System: CW; Frequency: 750 MHz;Duty Cycle: 1:1
Medium: HSL_750_220505 Medium parameters used: f = 750 MHz; σ = 0.885 S/m; ε_r = 42.34; ρ = 1000 kg/m^3
Ambient Temperature：23.7 ℃; Liquid Temperature：22.7 ℃

DASY5 Configuration:
- Probe: EX3DV4 - SN3931; ConvF(10.36, 10.36, 10.36) @ 750 MHz; Calibrated: 2021/10/21
- Sensor-Surface: 1.4mm (Mechanical Surface Detection)
- Electronics: DAE4 Sn1399; Calibrated: 2022/2/28
- Phantom: SAM-Middle; Type: SAM; Serial: TP-1503
- Measurement SW: DASY52, Version 52.10 (4);SEMCAD X Version 14.6.14 (7483)

Pin=250mW/Area Scan (61x61x1): Interpolated grid: dx=1.500 mm, dy=1.500 mm
Maximum value of SAR (interpolated) = 2.37 W/kg
Pin=250mW/Zoom Scan (5x5x7)/Cube 0: Measurement grid: dx=8mm, dy=8mm, dz=5mm
Reference Value = 52.56 V/m; Power Drift = -0.15 dB
Peak SAR (extrapolated) = 2.80 W/kg
SAR(1 g) = 1.93 W/kg; SAR(10 g) = 1.3 W/kg
Maximum value of SAR (measured) = 2.40 W/kg

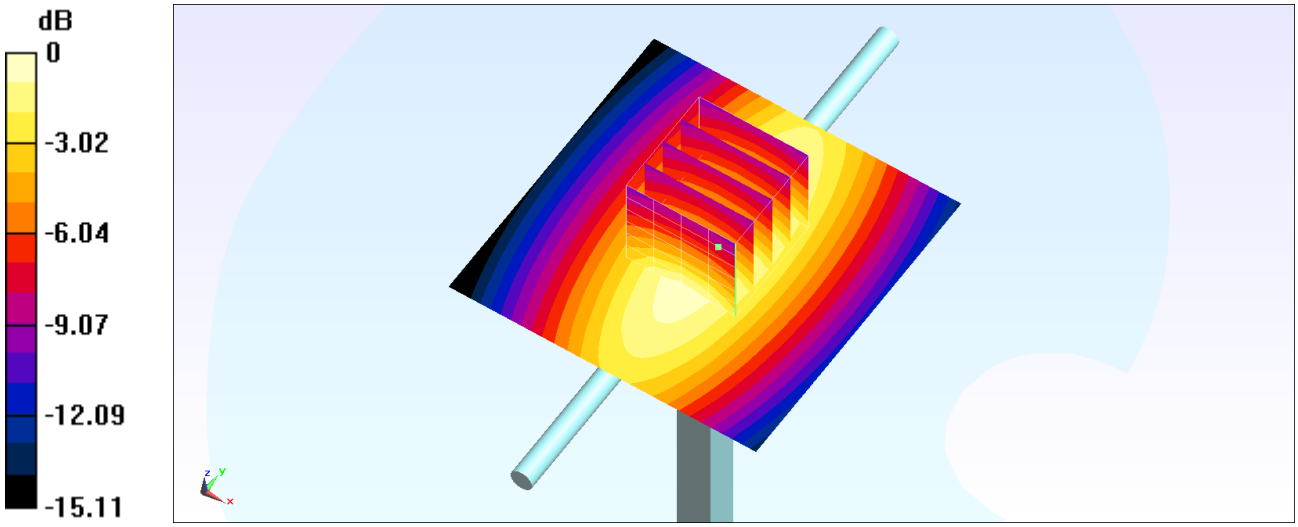

0 dB = 2.40 W/kg = 3.80 dBW/kg

System Check_Head_750MHz

DUT: D750V3-1012

Communication System: CW ; Frequency: 750 MHz;Duty Cycle: 1:1
Medium: HSL_750_220525 Medium parameters used: f = 750 MHz; σ = 0.875 S/m; ε_r = 41.464; ρ = 1000 kg/m^3
Ambient Temperature：23.6 ℃; Liquid Temperature：22.6 ℃

DASY5 Configuration:
- Probe: ES3DV3 - SN3115; ConvF(6.3, 6.3, 6.3) @ 750 MHz; Calibrated: 2021/11/23
- Sensor-Surface: 3mm (Mechanical Surface Detection)
- Electronics: DAE4 Sn656; Calibrated: 2022/1/19
- Phantom: SAM-Middle; Type: SAM; Serial: TP-1503
- Measurement SW: DASY52, Version 52.10 (4);SEMCAD X Version 14.6.14 (7483)

Pin=250mW/Area Scan (61x61x1): Interpolated grid: dx=1.500 mm, dy=1.500 mm
Maximum value of SAR (interpolated) = 2.47 W/kg

Pin=250mW/Zoom Scan (5x5x7)/Cube 0: Measurement grid: dx=8mm, dy=8mm, dz=5mm
Reference Value = 54.66 V/m; Power Drift = -0.03 dB
Peak SAR (extrapolated) = 2.89 W/kg
SAR(1 g) = 2.13 W/kg; SAR(10 g) = 1.47 W/kg
Maximum value of SAR (measured) = 2.44 W/kg

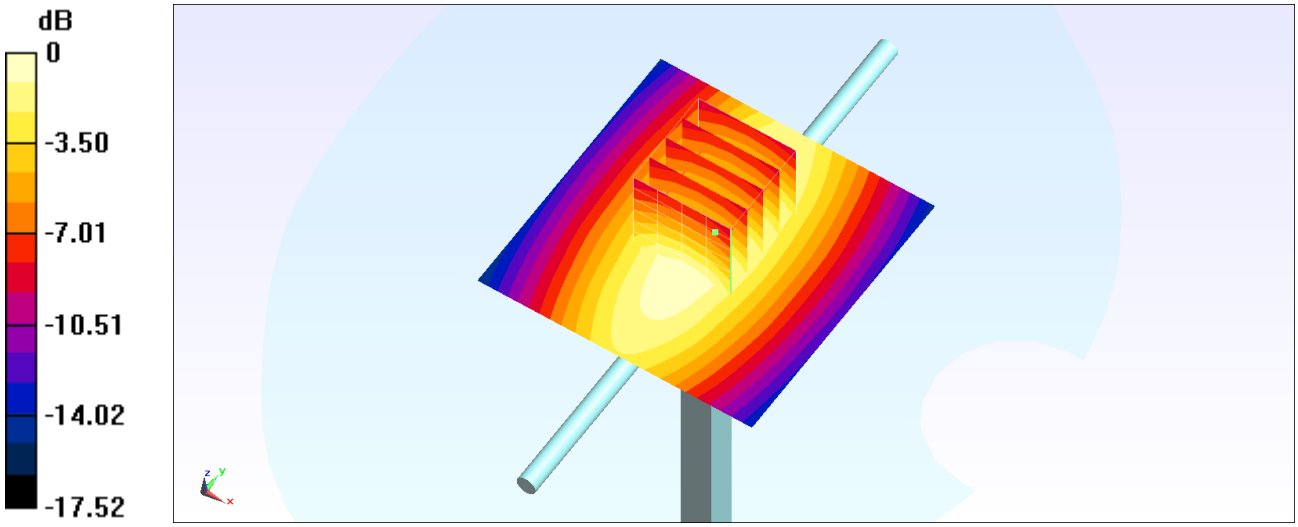

0 dB = 2.44 W/kg = 3.87 dBW/kg

System Check_Head_835MHz

DUT: D835V2-499

Communication System: CW; Frequency: 835 MHz;Duty Cycle: 1:1
Medium: HSL_850_220411 Medium parameters used: f = 835 MHz; σ = 0.881 S/m; ε_r = 42.343; ρ = 1000 kg/m^3
Ambient Temperature：23.6 ℃; Liquid Temperature：22.6 ℃

DASY5 Configuration:
- Probe: EX3DV4 - SN3931; ConvF(9.8, 9.8, 9.8) @ 835 MHz; Calibrated: 2021/10/21
- Sensor-Surface: 1.4mm (Mechanical Surface Detection)
- Electronics: DAE4 Sn1399; Calibrated: 2022/2/28
- Phantom: SAM-Middle; Type: SAM; Serial: TP-1503
- Measurement SW: DASY52, Version 52.10 (4);SEMCAD X Version 14.6.14 (7483)

Pin=50mW/Area Scan (61x61x1): Interpolated grid: dx=1.500 mm, dy=1.500 mm
Maximum value of SAR (interpolated) = 0.648 W/kg

Pin=50mW/Zoom Scan (5x5x7)/Cube 0: Measurement grid: dx=8mm, dy=8mm, dz=5mm
Reference Value = 28.38 V/m; Power Drift = -0.06 dB
Peak SAR (extrapolated) = 0.727 W/kg
SAR(1 g) = 0.484 W/kg; SAR(10 g) = 0.315 W/kg
Maximum value of SAR (measured) = 0.646 W/kg

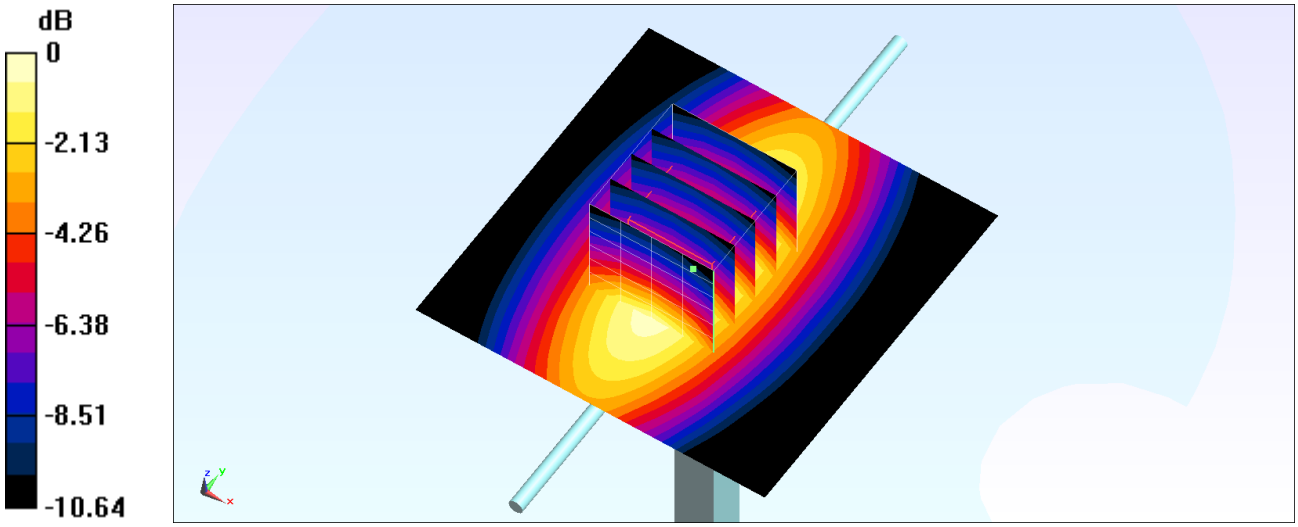

0 dB = 0.646 W/kg = -1.90 dBW/kg

System Check_Head_835MHz

DUT: D835V2-4d167

Communication System: CW; Frequency: 835 MHz;Duty Cycle: 1:1
Medium: HSL_850_220415 Medium parameters used: f = 835 MHz; σ = 0.88 S/m; ε_r = 42.33; ρ = 1000 kg/m^3
Ambient Temperature：23.4 ℃; Liquid Temperature：22.4 ℃

DASY5 Configuration:
- Probe: EX3DV4 - SN3931; ConvF(9.8, 9.8, 9.8) @ 835 MHz; Calibrated: 2021/10/21
- Sensor-Surface: 1.4mm (Mechanical Surface Detection)
- Electronics: DAE4 Sn1399; Calibrated: 2022/2/28
- Phantom: SAM-Middle; Type: SAM; Serial: TP-1503
- Measurement SW: DASY52, Version 52.10 (4);SEMCAD X Version 14.6.14 (7483)

Pin=50mW/Area Scan (61x61x1): Interpolated grid: dx=1.500 mm, dy=1.500 mm
Maximum value of SAR (interpolated) = 0.617 W/kg

Pin=50mW/Zoom Scan (5x5x7)/Cube 0: Measurement grid: dx=8mm, dy=8mm, dz=5mm
Reference Value = 27.79 V/m; Power Drift = -0.05 dB
Peak SAR (extrapolated) = 0.695 W/kg
SAR(1 g) = 0.455 W/kg; SAR(10 g) = 0.297 W/kg
Maximum value of SAR (measured) = 0.615 W/kg

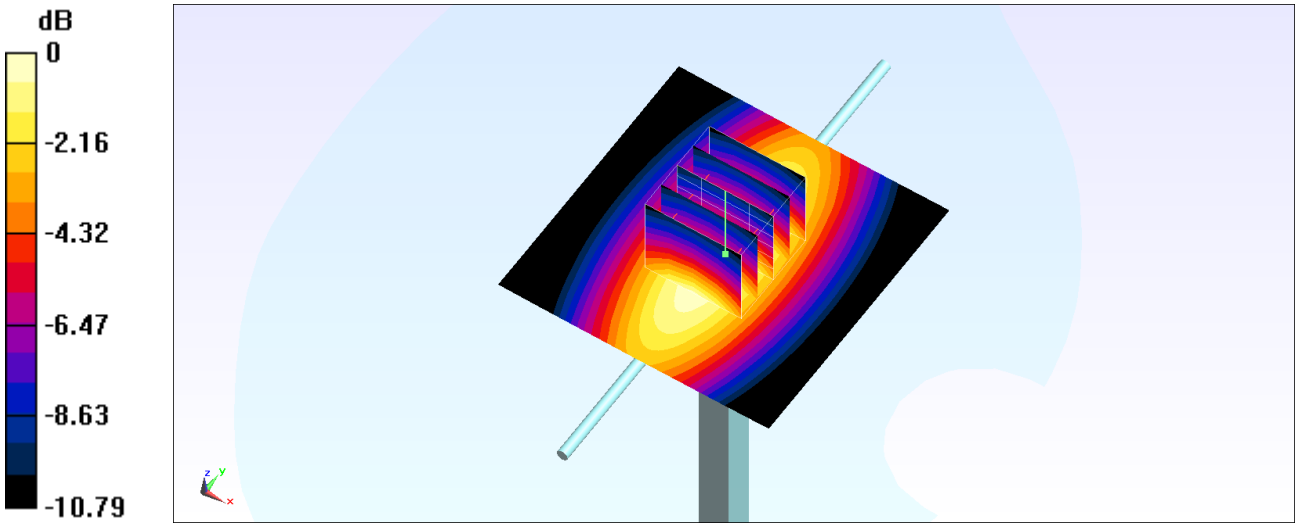

0 dB = 0.615 W/kg = -2.11 dBW/kg

System Check_Head_835MHz

DUT: D835V2-4d167

Communication System: CW; Frequency: 835 MHz;Duty Cycle: 1:1
Medium: HSL_850_220416 Medium parameters used: f = 835 MHz; σ = 0.886 S/m; ε_r = 42.237; ρ = 1000 kg/m^3
Ambient Temperature：23.6 ℃; Liquid Temperature：22.6 ℃

DASY5 Configuration:
- Probe: EX3DV4 - SN3931; ConvF(9.8, 9.8, 9.8) @ 835 MHz; Calibrated: 2021/10/21
- Sensor-Surface: 1.4mm (Mechanical Surface Detection)
- Electronics: DAE4 Sn1399; Calibrated: 2022/2/28
- Phantom: SAM-Middle; Type: SAM; Serial: TP-1503
- Measurement SW: DASY52, Version 52.10 (4);SEMCAD X Version 14.6.14 (7483)

Pin=50mW/Area Scan (61x61x1): Interpolated grid: dx=1.500 mm, dy=1.500 mm
Maximum value of SAR (interpolated) = 0.622 W/kg

Pin=50mW/Zoom Scan (5x5x7)/Cube 0: Measurement grid: dx=8mm, dy=8mm, dz=5mm
Reference Value = 27.79 V/m; Power Drift = -0.05 dB
Peak SAR (extrapolated) = 0.700 W/kg
SAR(1 g) = 0.458 W/kg; SAR(10 g) = 0.299 W/kg
Maximum value of SAR (measured) = 0.619 W/kg

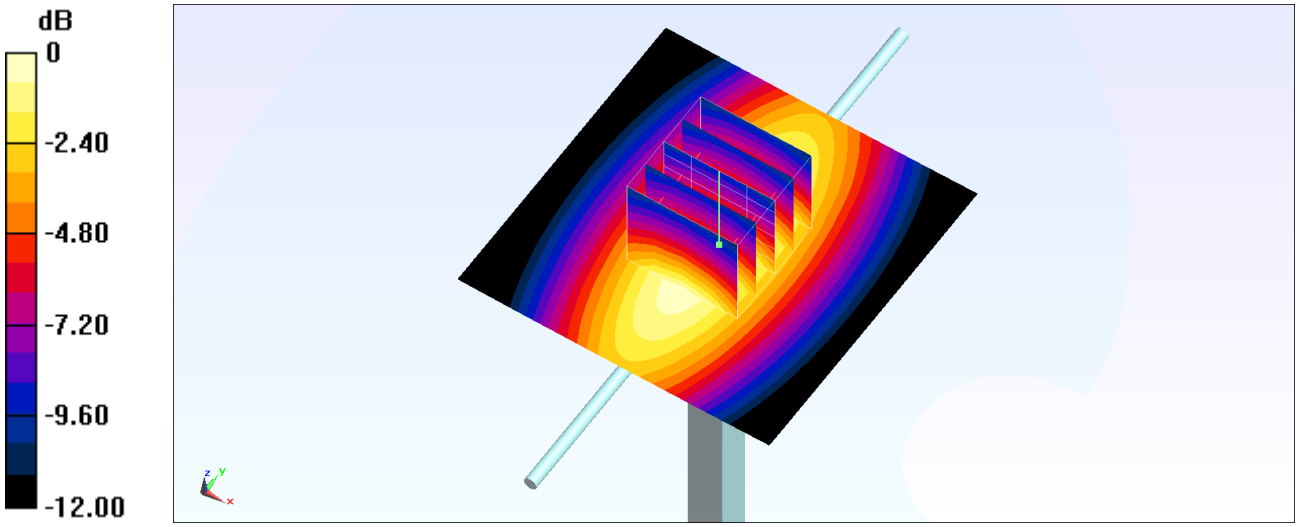

0 dB = 0.619 W/kg = -2.08 dBW/kg

System Check_Head_835MHz

DUT: D835V2-499

Communication System: CW; Frequency: 835 MHz;Duty Cycle: 1:1
Medium: HSL_850_220420 Medium parameters used: f = 835 MHz; σ = 0.897 S/m; ε_r = 41.505; ρ = 1000 kg/m^3
Ambient Temperature：23.3 ℃; Liquid Temperature：22.3 ℃

DASY5 Configuration:
- Probe: EX3DV4 - SN3931; ConvF(9.8, 9.8, 9.8) @ 835 MHz; Calibrated: 2021/10/21
- Sensor-Surface: 1.4mm (Mechanical Surface Detection)
- Electronics: DAE4 Sn1399; Calibrated: 2022/2/28
- Phantom: SAM-Middle; Type: SAM; Serial: TP-1503
- Measurement SW: DASY52, Version 52.10 (4);SEMCAD X Version 14.6.14 (7483)

Pin=50mW/Area Scan (61x61x1): Interpolated grid: dx=1.500 mm, dy=1.500 mm
Maximum value of SAR (interpolated) = 0.678 W/kg

Pin=50mW/Zoom Scan (5x5x7)/Cube 0: Measurement grid: dx=8mm, dy=8mm, dz=5mm
Reference Value = 28.87 V/m; Power Drift = -0.19 dB
Peak SAR (extrapolated) = 0.775 W/kg
SAR(1 g) = 0.494 W/kg; SAR(10 g) = 0.317 W/kg
Maximum value of SAR (measured) = 0.677 W/kg

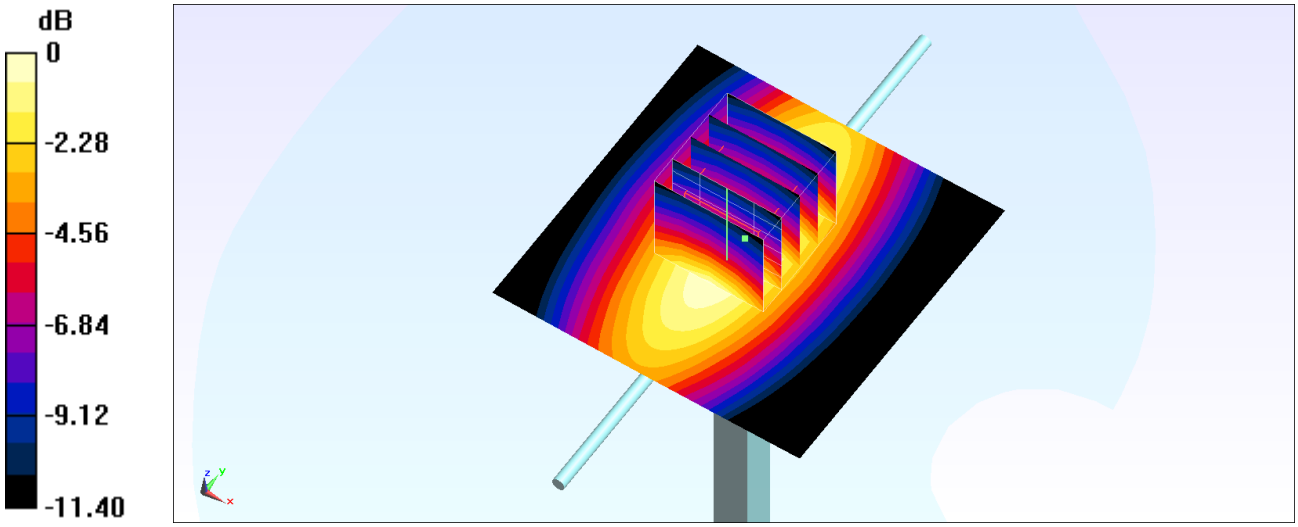

0 dB = 0.677 W/kg = -1.69 dBW/kg

System Check_Head_835MHz

DUT: D835V2-4d167

Communication System: CW; Frequency: 835 MHz;Duty Cycle: 1:1
Medium: HSL_850_220503 Medium parameters used: f = 835 MHz; σ = 0.908 S/m; ε_r = 42.078; ρ = 1000 kg/m^3
Ambient Temperature：23.6 ℃; Liquid Temperature：22.6 ℃

DASY5 Configuration:
- Probe: EX3DV4 - SN3931; ConvF(9.8, 9.8, 9.8) @ 835 MHz; Calibrated: 2021/10/21
- Sensor-Surface: 1.4mm (Mechanical Surface Detection)
- Electronics: DAE4 Sn1399; Calibrated: 2022/2/28
- Phantom: SAM-Middle; Type: SAM; Serial: TP-1503
- Measurement SW: DASY52, Version 52.10 (4);SEMCAD X Version 14.6.14 (7483)

Pin=50mW/Area Scan (61x61x1): Interpolated grid: dx=1.500 mm, dy=1.500 mm
Maximum value of SAR (interpolated) = 0.624 W/kg

Pin=50mW/Zoom Scan (5x5x7)/Cube 0: Measurement grid: dx=8mm, dy=8mm, dz=5mm
Reference Value = 27.12 V/m; Power Drift = -0.01 dB
Peak SAR (extrapolated) = 0.672 W/kg
SAR(1 g) = 0.486 W/kg; SAR(10 g) = 0.329 W/kg
Maximum value of SAR (measured) = 0.620 W/kg

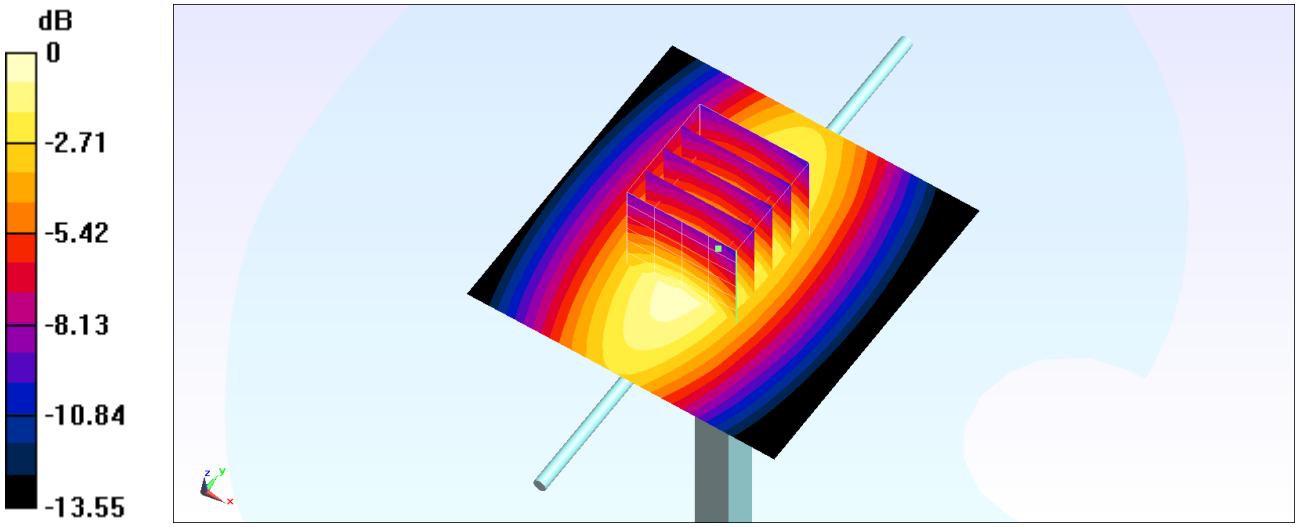

0 dB = 0.620 W/kg = -2.08 dBW/kg

System Check_Head_835MHz

DUT: D835V2-4d167

Communication System: CW; Frequency: 835 MHz;Duty Cycle: 1:1
Medium: HSL_850_220505 Medium parameters used: f = 835 MHz; σ = 0.922 S/m; ε_r = 42.071; ρ = 1000 kg/m^3
Ambient Temperature：23.7 ℃; Liquid Temperature：22.7 ℃

DASY5 Configuration:
- Probe: EX3DV4 - SN3931; ConvF(9.8, 9.8, 9.8) @ 835 MHz; Calibrated: 2021/10/21
- Sensor-Surface: 1.4mm (Mechanical Surface Detection)
- Electronics: DAE4 Sn1399; Calibrated: 2022/2/28
- Phantom: SAM-Middle; Type: SAM; Serial: TP-1503
- Measurement SW: DASY52, Version 52.10 (4);SEMCAD X Version 14.6.14 (7483)

Pin=50mW/Area Scan (61x61x1): Interpolated grid: dx=1.500 mm, dy=1.500 mm
Maximum value of SAR (interpolated) = 0.646 W/kg

Pin=50mW/Zoom Scan (5x5x7)/Cube 0: Measurement grid: dx=8mm, dy=8mm, dz=5mm
Reference Value = 27.79 V/m; Power Drift = -0.02 dB
Peak SAR (extrapolated) = 0.728 W/kg
SAR(1 g) = 0.477 W/kg; SAR(10 g) = 0.311 W/kg
Maximum value of SAR (measured) = 0.644 W/kg

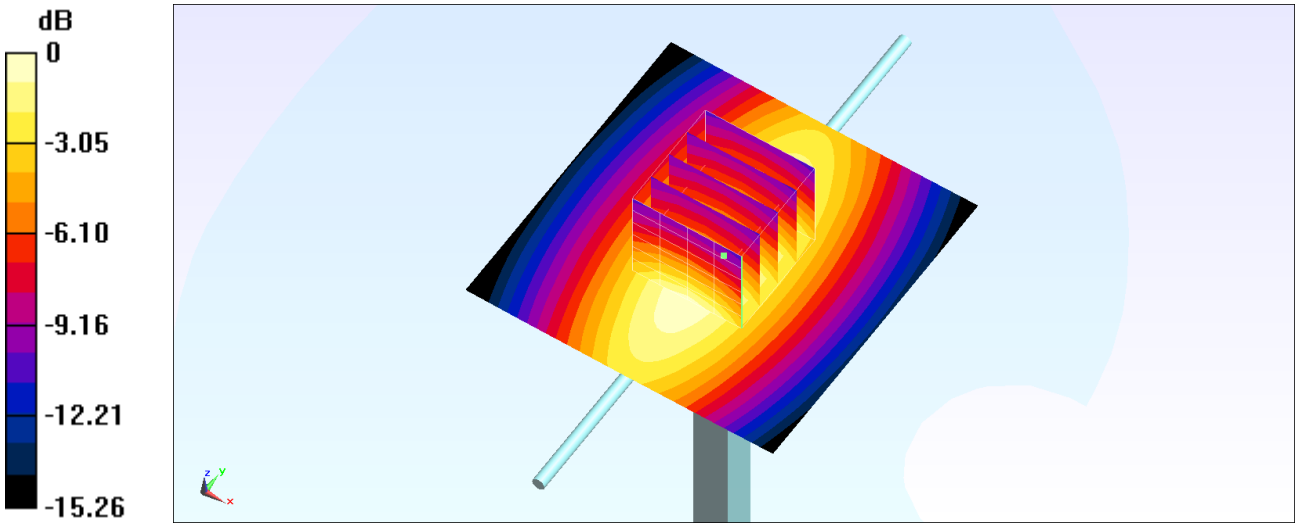

0 dB = 0.644 W/kg = -1.91 dBW/kg

System Check_Head_1750MHz

DUT: D1750V2-1068

Communication System: CW; Frequency: 1750 MHz;Duty Cycle: 1:1
Medium: HSL_1750_220415 Medium parameters used: f = 1750 MHz; σ = 1.36 S/m; ε_r = 40.632; ρ = 1000 kg/m^3
Ambient Temperature：23.6 ℃; Liquid Temperature：22.6 ℃

DASY5 Configuration:
- Probe: EX3DV4 - SN3931; ConvF(8.6, 8.6, 8.6) @ 1750 MHz; Calibrated: 2021/10/21
- Sensor-Surface: 1.4mm (Mechanical Surface Detection)
- Electronics: DAE4 Sn1399; Calibrated: 2022/2/28
- Phantom: SAM-Middle; Type: SAM; Serial: TP-1503
- Measurement SW: DASY52, Version 52.10 (4);SEMCAD X Version 14.6.14 (7483)

Pin=50mW/Area Scan (61x61x1): Interpolated grid: dx=1.500 mm, dy=1.500 mm
Maximum value of SAR (interpolated) = 2.81 W/kg

Pin=50mW/Zoom Scan (5x5x7)/Cube 0: Measurement grid: dx=8mm, dy=8mm, dz=5mm
Reference Value = 46.32 V/m; Power Drift = -0.04 dB
Peak SAR (extrapolated) = 3.28 W/kg
SAR(1 g) = 1.84 W/kg; SAR(10 g) = 0.981 W/kg
Maximum value of SAR (measured) = 2.80 W/kg

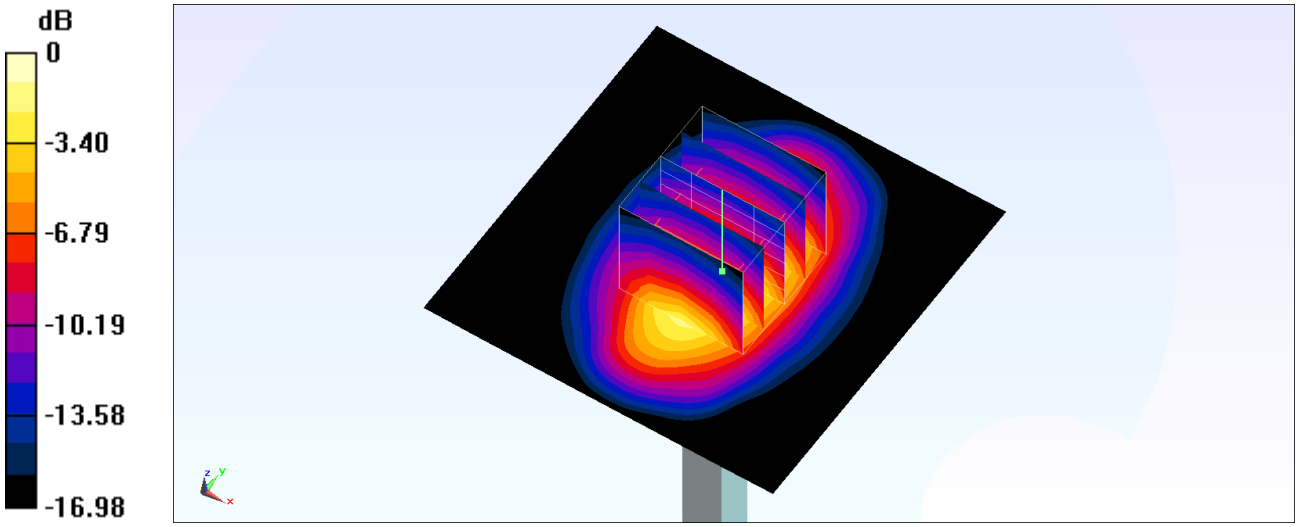

0 dB = 2.80 W/kg = 4.47 dBW/kg

System Check_Head_1750MHz

DUT: D1750V2-1068

Communication System: CW; Frequency: 1750 MHz;Duty Cycle: 1:1
Medium: HSL_1750_220417 Medium parameters used: f = 1750 MHz; σ = 1.351 S/m; ε_r = 40.537; ρ = 1000 kg/m^3
Ambient Temperature：23.4 ℃; Liquid Temperature：22.4 ℃

DASY5 Configuration:
- Probe: EX3DV4 - SN3931; ConvF(8.6, 8.6, 8.6) @ 1750 MHz; Calibrated: 2021/10/21
- Sensor-Surface: 1.4mm (Mechanical Surface Detection)
- Electronics: DAE4 Sn1399; Calibrated: 2022/2/28
- Phantom: SAM-Middle; Type: SAM; Serial: TP-1503
- Measurement SW: DASY52, Version 52.10 (4);SEMCAD X Version 14.6.14 (7483)

Pin=50mW/Area Scan (61x61x1): Interpolated grid: dx=1.500 mm, dy=1.500 mm
Maximum value of SAR (interpolated) = 2.79 W/kg

Pin=50mW/Zoom Scan (5x5x7)/Cube 0: Measurement grid: dx=8mm, dy=8mm, dz=5mm
Reference Value = 46.32 V/m; Power Drift = -0.02 dB
Peak SAR (extrapolated) = 3.26 W/kg
SAR(1 g) = 1.83 W/kg; SAR(10 g) = 0.974 W/kg
Maximum value of SAR (measured) = 2.78 W/kg

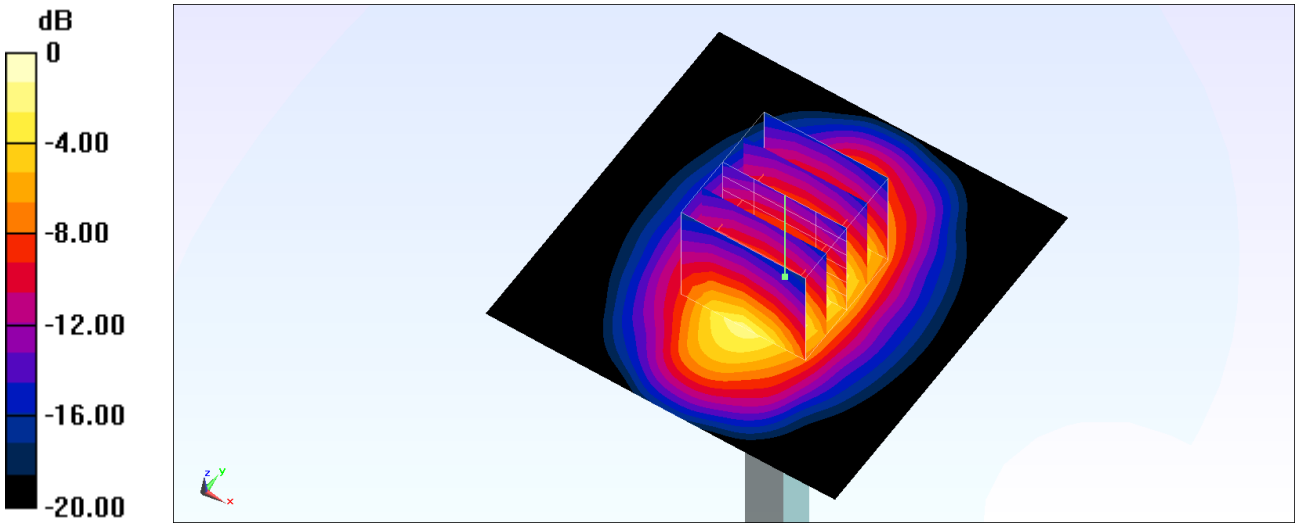

0 dB = 2.78 W/kg = 4.44 dBW/kg

System Check_Head_1750MHz

DUT: D1750V2-1068

Communication System: CW; Frequency: 1750 MHz;Duty Cycle: 1:1
Medium: HSL_1750_220421 Medium parameters used: f = 1750 MHz; σ = 1.376 S/m; ε_r = 41.436; ρ = 1000 kg/m^3
Ambient Temperature：23.5 ℃; Liquid Temperature：22.5 ℃

DASY5 Configuration:
- Probe: EX3DV4 - SN3931; ConvF(8.6, 8.6, 8.6) @ 1750 MHz; Calibrated: 2021/10/21
- Sensor-Surface: 1.4mm (Mechanical Surface Detection)
- Electronics: DAE4 Sn1399; Calibrated: 2022/2/28
- Phantom: SAM-Middle; Type: SAM; Serial: TP-1503
- Measurement SW: DASY52, Version 52.10 (4);SEMCAD X Version 14.6.14 (7483)

Pin=250mW/Area Scan (61x61x1): Interpolated grid: dx=1.500 mm, dy=1.500 mm
Maximum value of SAR (interpolated) = 13.8 W/kg

Pin=250mW/Zoom Scan (5x5x7)/Cube 0: Measurement grid: dx=8mm, dy=8mm, dz=5mm
Reference Value = 102.8 V/m; Power Drift = -0.15 dB
Peak SAR (extrapolated) = 16.5 W/kg
SAR(1 g) = 8.99 W/kg; SAR(10 g) = 4.73 W/kg
Maximum value of SAR (measured) = 14.0 W/kg

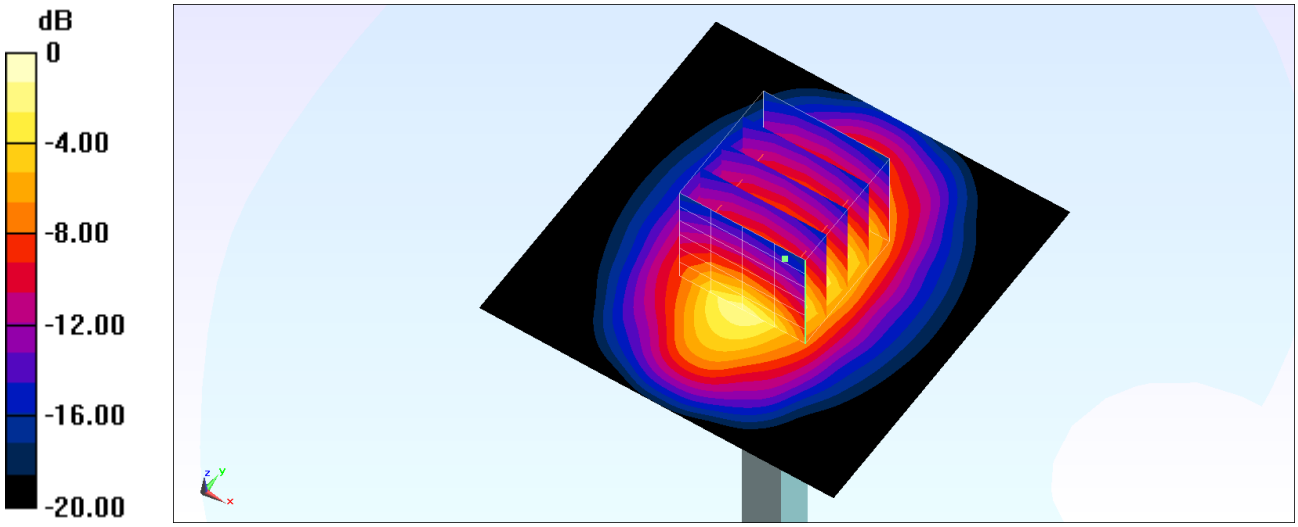

0 dB = 14.0 W/kg = 11.46 dBW/kg

System Check_Head_1750MHz

DUT: D1750V2-1068

Communication System: CW; Frequency: 1750 MHz;Duty Cycle: 1:1
Medium: HSL_1750_220423 Medium parameters used: f = 1750 MHz; σ = 1.353 S/m; ε_r = 39.697; ρ = 1000 kg/m^3
Ambient Temperature：23.5 ℃; Liquid Temperature：22.5 ℃

DASY5 Configuration:
- Probe: EX3DV4 - SN3931; ConvF(8.6, 8.6, 8.6) @ 1750 MHz; Calibrated: 2021/10/21
- Sensor-Surface: 1.4mm (Mechanical Surface Detection)
- Electronics: DAE4 Sn1399; Calibrated: 2022/2/28
- Phantom: SAM-Middle; Type: SAM; Serial: TP-1503
- Measurement SW: DASY52, Version 52.10 (4);SEMCAD X Version 14.6.14 (7483)

Pin=50mW/Area Scan (61x61x1): Interpolated grid: dx=1.500 mm, dy=1.500 mm
Maximum value of SAR (interpolated) = 2.44 W/kg

Pin=50mW/Zoom Scan (5x5x7)/Cube 0: Measurement grid: dx=8mm, dy=8mm, dz=5mm
Reference Value = 43.70 V/m; Power Drift = -0.02 dB
Peak SAR (extrapolated) = 2.76 W/kg
SAR(1 g) = 1.7 W/kg; SAR(10 g) = 0.951 W/kg
Maximum value of SAR (measured) = 2.42 W/kg

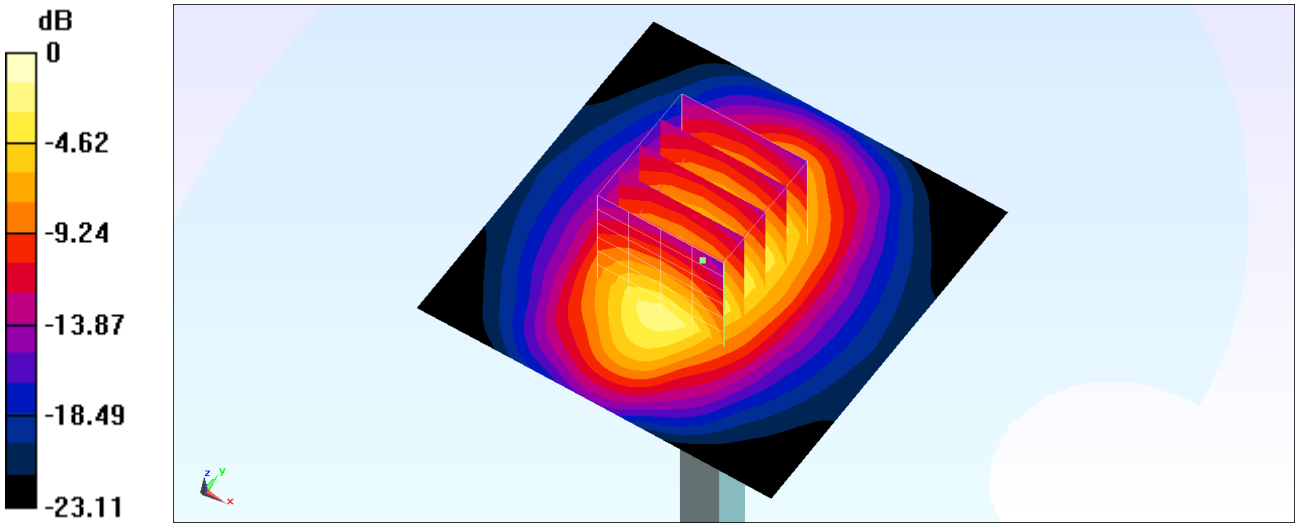

0 dB = 2.42 W/kg = 3.84 dBW/kg

System Check_Head_1750MHz

DUT: D1750V2-1068

Communication System: CW; Frequency: 1750 MHz;Duty Cycle: 1:1
Medium: HSL_1750_220501 Medium parameters used: f = 1750 MHz; σ = 1.338 S/m; ε_r = 39.73; ρ = 1000 kg/m^3
Ambient Temperature：23.5 ℃; Liquid Temperature：22.5 ℃

DASY5 Configuration:
- Probe: EX3DV4 - SN3931; ConvF(8.6, 8.6, 8.6) @ 1750 MHz; Calibrated: 2021/10/21
- Sensor-Surface: 1.4mm (Mechanical Surface Detection)
- Electronics: DAE4 Sn1399; Calibrated: 2022/2/28
- Phantom: SAM-Middle; Type: SAM; Serial: TP-1503
- Measurement SW: DASY52, Version 52.10 (4);SEMCAD X Version 14.6.14 (7483)

Pin=250mW/Area Scan (61x61x1): Interpolated grid: dx=1.500 mm, dy=1.500 mm
Maximum value of SAR (interpolated) = 14.1 W/kg
Pin=250mW/Zoom Scan (5x5x7)/Cube 0: Measurement grid: dx=8mm, dy=8mm, dz=5mm
Reference Value = 106.7 V/m; Power Drift = -0.02 dB
Peak SAR (extrapolated) = 16.6 W/kg
SAR(1 g) = 9.34 W/kg; SAR(10 g) = 5.07 W/kg
Maximum value of SAR (measured) = 13.7 W/kg

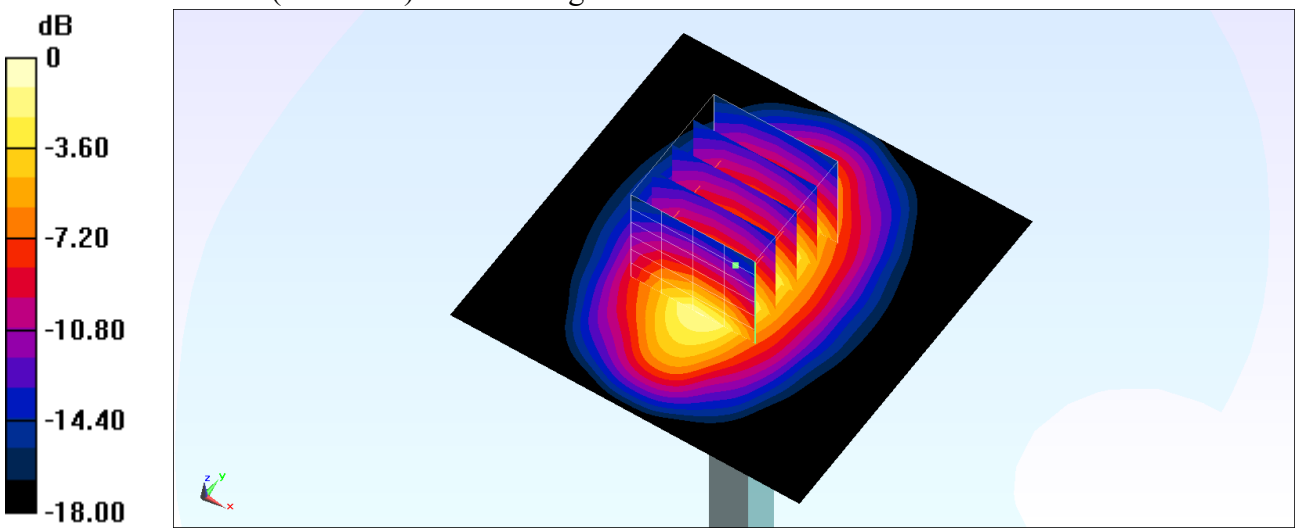

0 dB = 13.7 W/kg = 11.37 dBW/kg

System Check_Head_1750MHz

DUT: D1750V2-1068

Communication System: CW; Frequency: 1750 MHz;Duty Cycle: 1:1
Medium: HSL_1750_220502 Medium parameters used: f = 1750 MHz; σ = 1.376 S/m; ε_r = 40.808; ρ = 1000 kg/m^3
Ambient Temperature：23.5 ℃; Liquid Temperature：22.5 ℃

DASY5 Configuration:
- Probe: EX3DV4 - SN3931; ConvF(8.6, 8.6, 8.6) @ 1750 MHz; Calibrated: 2021/10/21
- Sensor-Surface: 1.4mm (Mechanical Surface Detection)
- Electronics: DAE4 Sn1399; Calibrated: 2022/2/28
- Phantom: SAM-Middle; Type: SAM; Serial: TP-1503
- Measurement SW: DASY52, Version 52.10 (4);SEMCAD X Version 14.6.14 (7483)

Pin=50mW/Area Scan (61x61x1): Interpolated grid: dx=1.500 mm, dy=1.500 mm
Maximum value of SAR (interpolated) = 2.49 W/kg

Pin=50mW/Zoom Scan (5x5x7)/Cube 0: Measurement grid: dx=8mm, dy=8mm, dz=5mm
Reference Value = 43.70 V/m; Power Drift = -0.12 dB
Peak SAR (extrapolated) = 2.81 W/kg
SAR(1 g) = 1.73 W/kg; SAR(10 g) = 0.967 W/kg
Maximum value of SAR (measured) = 2.46 W/kg

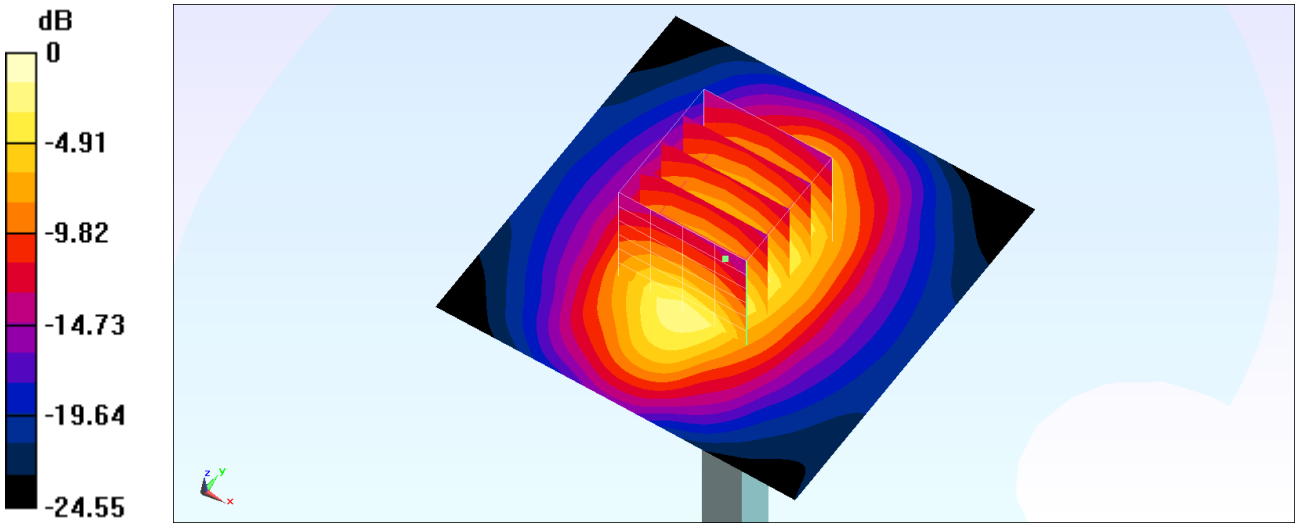

0 dB = 2.46 W/kg = 3.91 dBW/kg

System Check_Head_1750MHz

DUT: D1750V2-1068

Communication System: CW; Frequency: 1750 MHz;Duty Cycle: 1:1
Medium: HSL_1750_220504 Medium parameters used: f = 1750 MHz; σ = 1.385 S/m; ε_r = 39.624; ρ = 1000 kg/m^3
Ambient Temperature：23.2 ℃; Liquid Temperature：22.2 ℃

DASY5 Configuration:
- Probe: EX3DV4 - SN3931; ConvF(8.6, 8.6, 8.6) @ 1750 MHz; Calibrated: 2021/10/21
- Sensor-Surface: 1.4mm (Mechanical Surface Detection)
- Electronics: DAE4 Sn1399; Calibrated: 2022/2/28
- Phantom: SAM-Middle; Type: SAM; Serial: TP-1503
- Measurement SW: DASY52, Version 52.10 (4);SEMCAD X Version 14.6.14 (7483)

Pin=50mW/Area Scan (61x61x1): Interpolated grid: dx=1.500 mm, dy=1.500 mm
Maximum value of SAR (interpolated) = 2.73 W/kg

Pin=50mW/Zoom Scan (5x5x7)/Cube 0: Measurement grid: dx=8mm, dy=8mm, dz=5mm
Reference Value = 45.72 V/m; Power Drift = -0.04 dB
Peak SAR (extrapolated) = 3.22 W/kg
SAR(1 g) = 1.82 W/kg; SAR(10 g) = 0.986 W/kg
Maximum value of SAR (measured) = 2.76 W/kg

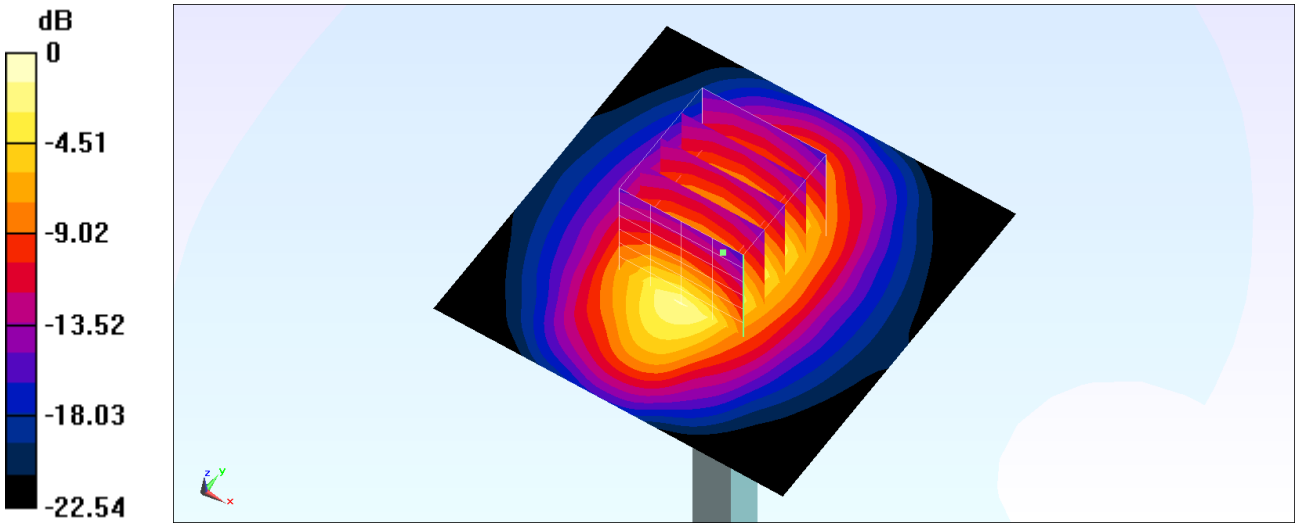

0 dB = 2.76 W/kg = 4.41 dBW/kg

System Check_Head_1750MHz

DUT: D1750V2-1068

Communication System: CW; Frequency: 1750 MHz;Duty Cycle: 1:1
Medium: HSL_1750_220509 Medium parameters used: f = 1750 MHz; σ = 1.37 S/m; ε_r = 40.633; ρ = 1000 kg/m^3
Ambient Temperature：23.6 ℃; Liquid Temperature：22.6 ℃

DASY5 Configuration:
- Probe: EX3DV4 - SN7625; ConvF(8.57, 8.57, 8.57) @ 1750 MHz; Calibrated: 2022/1/27
- Sensor-Surface: 1.4mm (Mechanical Surface Detection)
- Electronics: DAE4 Sn1696; Calibrated: 2021/11/3
- Phantom: SAM_Left; Type: SAM; Serial: TP:1682
- Measurement SW: DASY52, Version 52.10 (4);SEMCAD X Version 14.6.14 (7501)

Pin=250mW/Area Scan (61x61x1): Interpolated grid: dx=1.500 mm, dy=1.500 mm
Maximum value of SAR (interpolated) = 14.2 W/kg

Pin=250mW/Zoom Scan (5x5x7)/Cube 0: Measurement grid: dx=8mm, dy=8mm, dz=5mm
Reference Value = 103.4 V/m; Power Drift = -0.05 dB
Peak SAR (extrapolated) = 16.2 W/kg
SAR(1 g) = 9.06 W/kg; SAR(10 g) = 4.83 W/kg
Maximum value of SAR (measured) = 13.7 W/kg

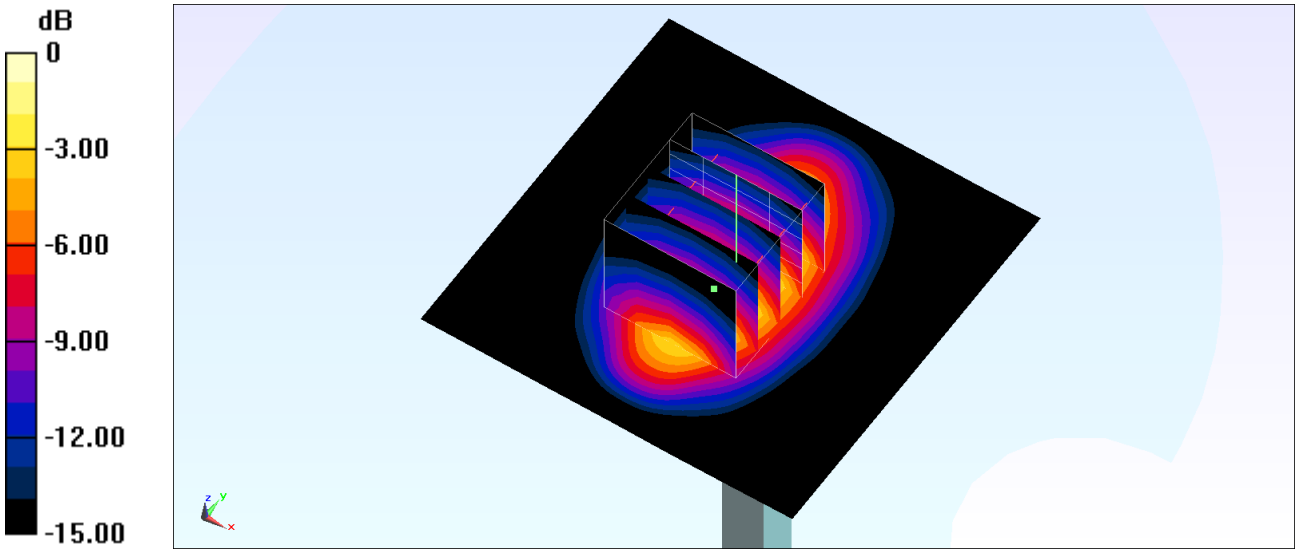

0 dB = 13.7 W/kg = 11.37 dBW/kg

System Check_Head_1750MHz

DUT: D1750V2-1068

Communication System: CW; Frequency: 1750 MHz;Duty Cycle: 1:1
Medium: HSL_1750_220510 Medium parameters used: f = 1750 MHz; σ = 1.373 S/m; ε_r = 40.618; ρ = 1000 kg/m^3
Ambient Temperature：23.4 ℃; Liquid Temperature：22.4 ℃

DASY5 Configuration:
- Probe: ES3DV3 - SN3115; ConvF(5.3, 5.3, 5.3) @ 1750 MHz; Calibrated: 2021/11/23
- Sensor-Surface: 3mm (Mechanical Surface Detection)
- Electronics: DAE4 Sn656; Calibrated: 2022/1/19
- Phantom: SAM_Left; Type: SAM; Serial: 1796
- Measurement SW: DASY52, Version 52.10 (4);SEMCAD X Version 14.6.14 (7501)

Pin=50mW/Area Scan (61x61x1): Interpolated grid: dx=1.500 mm, dy=1.500 mm
Maximum value of SAR (interpolated) = 2.47 W/kg

Pin=50mW/Zoom Scan (5x5x7)/Cube 0: Measurement grid: dx=8mm, dy=8mm, dz=5mm
Reference Value = 43.40 V/m; Power Drift = -0.12 dB
Peak SAR (extrapolated) = 3.31 W/kg
SAR(1 g) = 1.94 W/kg; SAR(10 g) = 1.06 W/kg
Maximum value of SAR (measured) = 2.36 W/kg

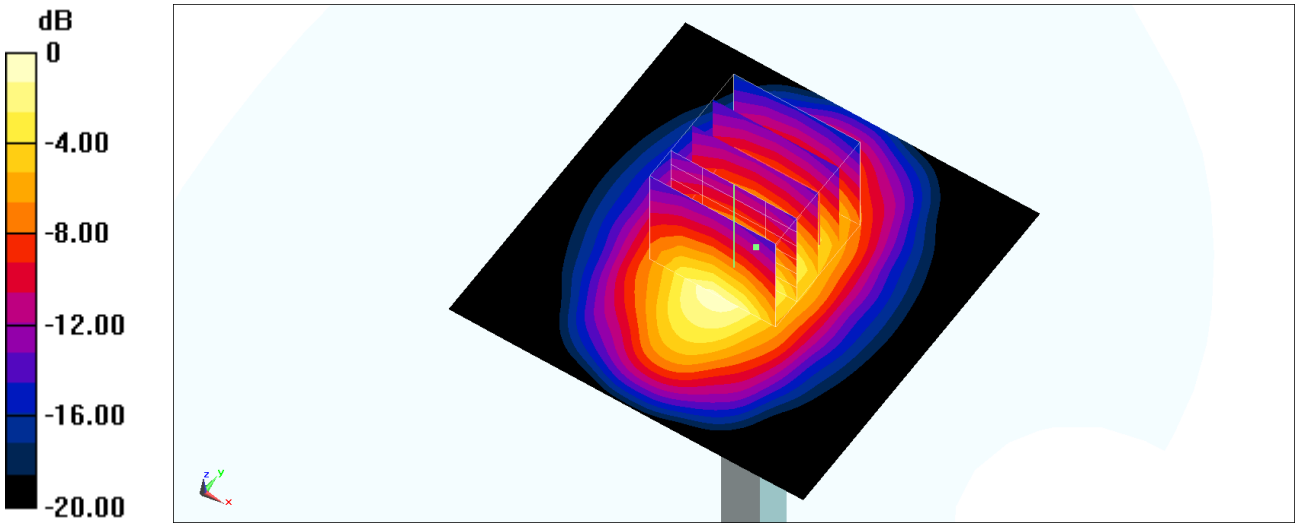

0 dB = 2.36 W/kg = 3.73 dBW/kg

System Check_Head_1750MHz

DUT: D1750V2-1068

Communication System: CW; Frequency: 1750 MHz;Duty Cycle: 1:1
Medium: HSL_1750_220511 Medium parameters used: f = 1750 MHz; σ = 1.373 S/m; ε_r = 41.027; ρ = 1000 kg/m^3
Ambient Temperature：23.6 ℃; Liquid Temperature：22.6 ℃

DASY5 Configuration:
- Probe: ES3DV3 - SN3270; ConvF(5.43, 5.43, 5.43) @ 1750 MHz; Calibrated: 2021/9/21
- Sensor-Surface: 3mm (Mechanical Surface Detection)
- Electronics: DAE4 Sn1512; Calibrated: 2022/3/29
- Phantom: SAM_Left; Type: SAM; Serial: 1796
- Measurement SW: DASY52, Version 52.10 (4);SEMCAD X Version 14.6.14 (7501)

Pin=250mW/Area Scan (61x61x1): Interpolated grid: dx=1.500 mm, dy=1.500 mm
Maximum value of SAR (interpolated) = 12.7 W/kg

Pin=250mW/Zoom Scan (5x5x7)/Cube 0: Measurement grid: dx=8mm, dy=8mm, dz=5mm
Reference Value = 92.78 V/m; Power Drift = -0.11 dB
Peak SAR (extrapolated) = 16.2 W/kg
SAR(1 g) = 9.33 W/kg; SAR(10 g) = 5.04 W/kg
Maximum value of SAR (measured) = 11.5 W/kg

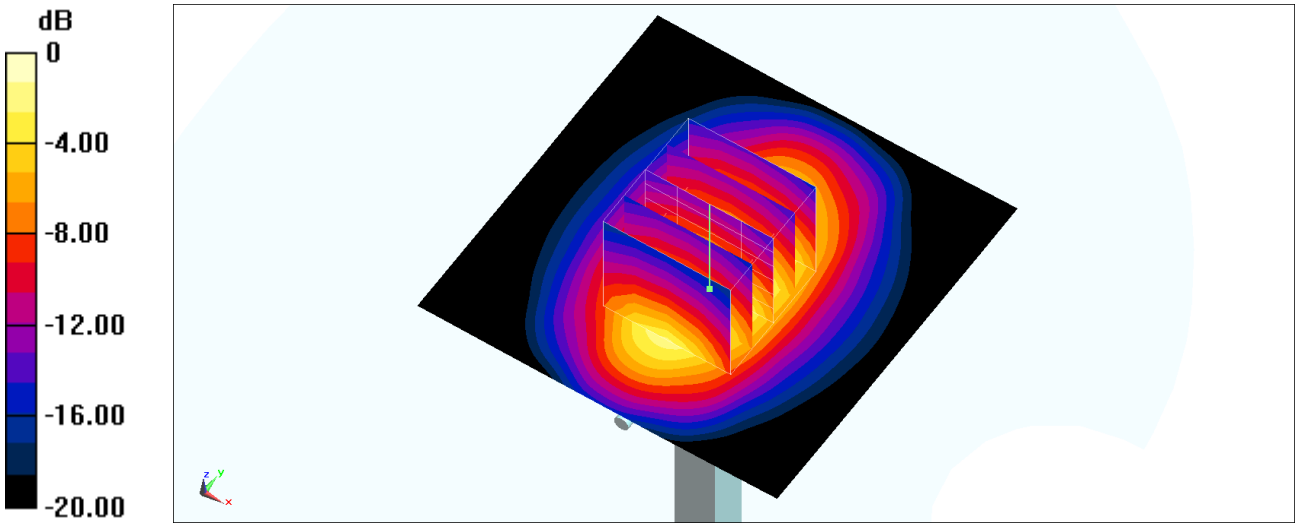

0 dB = 11.5 W/kg = 10.61 dBW/kg

System Check_Head_1750MHz

DUT: D1750V2-1068

Communication System: CW; Frequency: 1750 MHz;Duty Cycle: 1:1
Medium: HSL_1750_220513 Medium parameters used: f = 1750 MHz; σ = 1.372 S/m; ε_r = 41.013; ρ = 1000 kg/m^3
Ambient Temperature：23.3 ℃; Liquid Temperature：22.3 ℃

DASY5 Configuration:
- Probe: EX3DV4 - SN3931; ConvF(8.6, 8.6, 8.6) @ 1750 MHz; Calibrated: 2021/10/21
- Sensor-Surface: 1.4mm (Mechanical Surface Detection)
- Electronics: DAE4 Sn1399; Calibrated: 2022/2/28
- Phantom: SAM_Left; Type: SAM; Serial: 1796
- Measurement SW: DASY52, Version 52.10 (4);SEMCAD X Version 14.6.14 (7501)

Pin=50mW/Area Scan (61x61x1): Interpolated grid: dx=1.500 mm, dy=1.500 mm
Maximum value of SAR (interpolated) = 2.83 W/kg

Pin=50mW/Zoom Scan (5x5x7)/Cube 0: Measurement grid: dx=8mm, dy=8mm, dz=5mm
Reference Value = 46.32 V/m; Power Drift = -0.04 dB
Peak SAR (extrapolated) = 3.31 W/kg
SAR(1 g) = 1.85 W/kg; SAR(10 g) = 0.989 W/kg
Maximum value of SAR (measured) = 2.82 W/kg

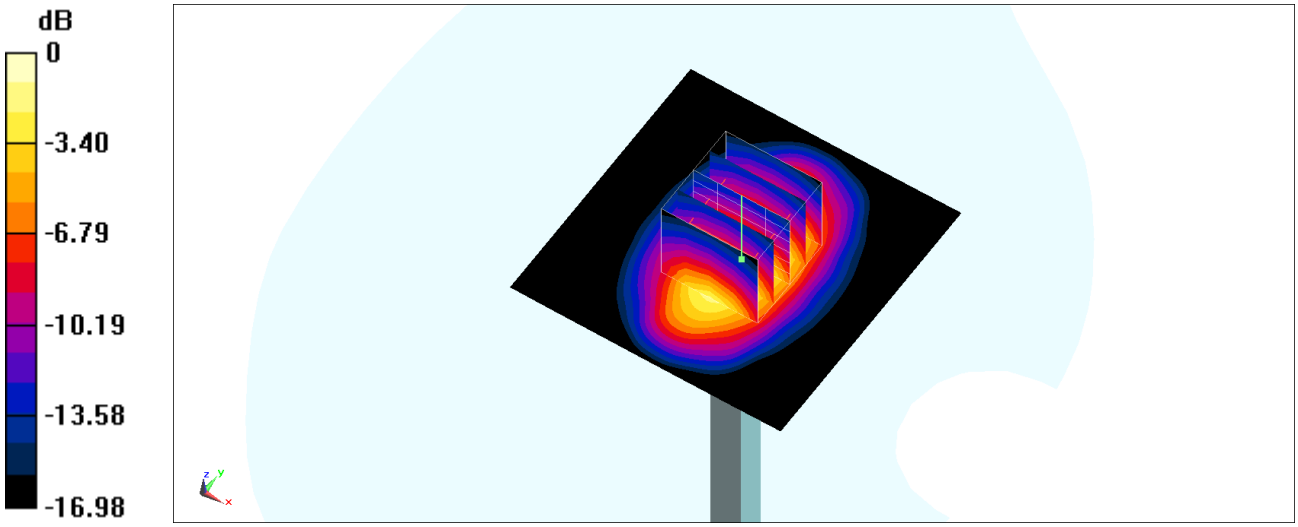

0 dB = 2.82 W/kg = 4.50 dBW/kg

System Check_Head_1750MHz

DUT: D1750V2-1068

Communication System: CW; Frequency: 1750 MHz;Duty Cycle: 1:1
Medium: HSL_1750_220516 Medium parameters used: f = 1750 MHz; σ = 1.372 S/m; ε_r = 40.613; ρ = 1000 kg/m^3
Ambient Temperature：23.3 ℃; Liquid Temperature：22.3 ℃

DASY5 Configuration:
- Probe: EX3DV4 - SN7694; ConvF(8.7, 8.7, 8.7) @ 1750 MHz; Calibrated: 2022/1/24
- Sensor-Surface: 1.4mm (Mechanical Surface Detection)
- Electronics: DAE4 Sn1424; Calibrated: 2022/1/20
- Phantom: SAM-Middle; Type: SAM; Serial: TP-1503
- Measurement SW: DASY52, Version 52.10 (4);SEMCAD X Version 14.6.14 (7483)

Pin=50mW/Area Scan (61x61x1): Interpolated grid: dx=1.500 mm, dy=1.500 mm
Maximum value of SAR (interpolated) = 2.68 W/kg

Pin=50mW/Zoom Scan (5x5x7)/Cube 0: Measurement grid: dx=8mm, dy=8mm, dz=5mm
Reference Value = 43.23 V/m; Power Drift = 0.04 dB
Peak SAR (extrapolated) = 3.28 W/kg
SAR(1 g) = 1.74 W/kg; SAR(10 g) = 0.921 W/kg
Maximum value of SAR (measured) = 2.72 W/kg

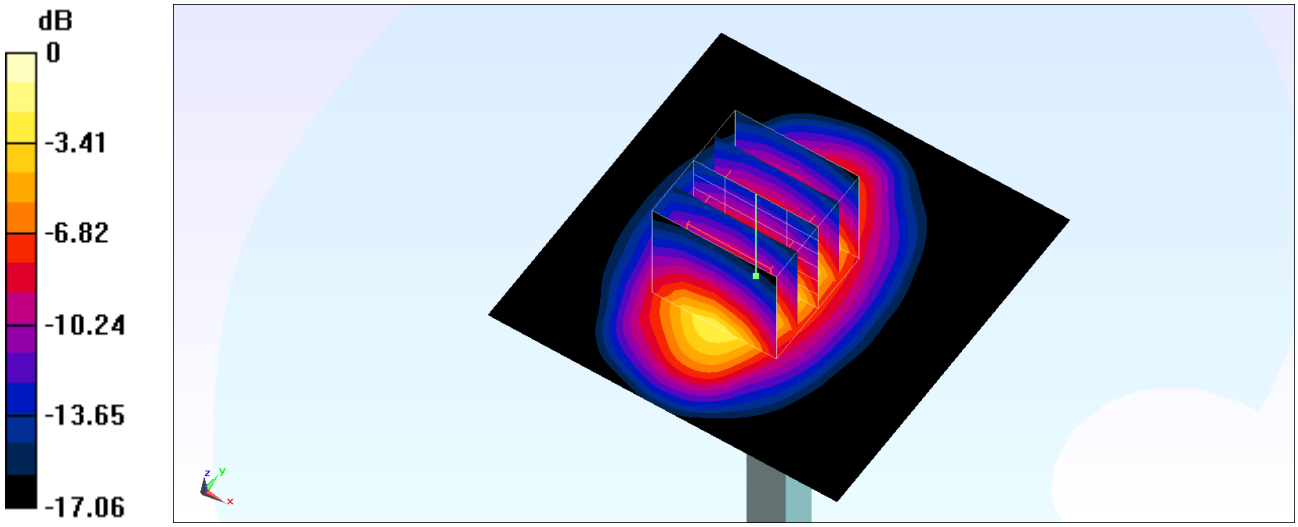

0 dB = 2.72 W/kg = 4.35 dBW/kg

System Check_Head_1900MHz

DUT: D1900V2-5d041

Communication System: CW; Frequency: 1900 MHz;Duty Cycle: 1:1
Medium: HSL_1900_220413 Medium parameters used: f = 1900 MHz; σ = 1.446 S/m; ε_r = 41.149; ρ = 1000 kg/m^3
Ambient Temperature：23.5 ℃; Liquid Temperature：22.5 ℃

DASY5 Configuration:
- Probe: EX3DV4 - SN3931; ConvF(8.25, 8.25, 8.25) @ 1900 MHz; Calibrated: 2021/10/21
- Sensor-Surface: 1.4mm (Mechanical Surface Detection)
- Electronics: DAE4 Sn1399; Calibrated: 2022/2/28
- Phantom: SAM-Middle; Type: SAM; Serial: TP-1503
- Measurement SW: DASY52, Version 52.10 (4);SEMCAD X Version 14.6.14 (7483)

Pin=50mW/Area Scan (61x61x1): Interpolated grid: dx=1.500 mm, dy=1.500 mm
Maximum value of SAR (interpolated) = 3.09 W/kg

Pin=50mW/Zoom Scan (5x5x7)/Cube 0: Measurement grid: dx=8mm, dy=8mm, dz=5mm
Reference Value = 47.79 V/m; Power Drift = -0.06 dB
Peak SAR (extrapolated) = 3.64 W/kg
SAR(1 g) = 1.99 W/kg; SAR(10 g) = 1.04 W/kg
Maximum value of SAR (measured) = 3.08 W/kg

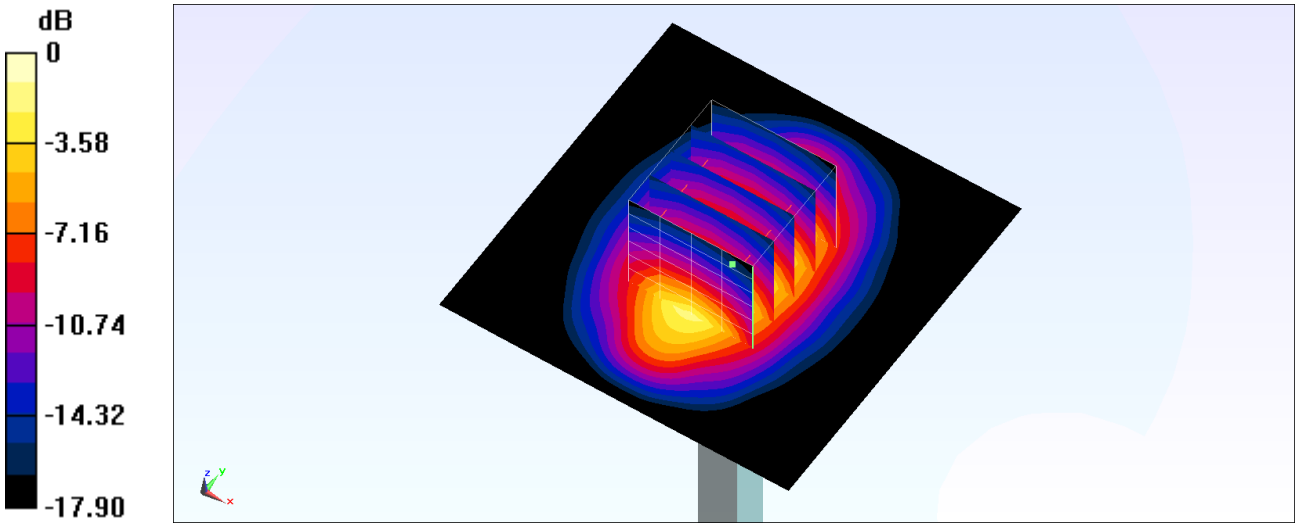

0 dB = 3.08 W/kg = 4.89 dBW/kg

System Check_Head_1900MHz

DUT: D1900V2-5d041

Communication System: CW; Frequency: 1900 MHz;Duty Cycle: 1:1
Medium: HSL_1900_220419 Medium parameters used: f = 1900 MHz; σ = 1.435 S/m; ε_r = 41.003; ρ = 1000 kg/m^3
Ambient Temperature：23.3 ℃; Liquid Temperature：22.3 ℃

DASY5 Configuration:
- Probe: EX3DV4 - SN3931; ConvF(8.25, 8.25, 8.25) @ 1900 MHz; Calibrated: 2021/10/21
- Sensor-Surface: 1.4mm (Mechanical Surface Detection)
- Electronics: DAE4 Sn1399; Calibrated: 2022/2/28
- Phantom: SAM-Middle; Type: SAM; Serial: TP-1503
- Measurement SW: DASY52, Version 52.10 (4);SEMCAD X Version 14.6.14 (7483)

Pin=50mW/Area Scan (61x61x1): Interpolated grid: dx=1.500 mm, dy=1.500 mm
Maximum value of SAR (interpolated) = 2.86 W/kg

Pin=50mW/Zoom Scan (5x5x7)/Cube 0: Measurement grid: dx=8mm, dy=8mm, dz=5mm
Reference Value = 44.98 V/m; Power Drift = -0.01 dB
Peak SAR (extrapolated) = 3.25 W/kg
SAR(1 g) = 1.96 W/kg; SAR(10 g) = 1.07 W/kg
Maximum value of SAR (measured) = 2.86 W/kg

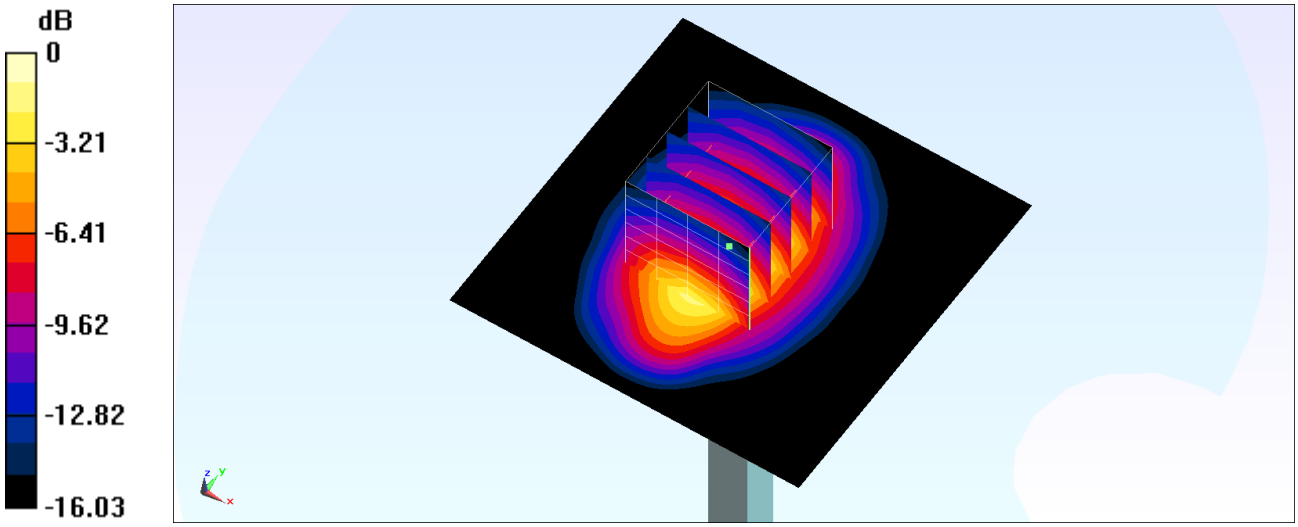

0 dB = 2.86 W/kg = 4.56 dBW/kg

System Check_Head_1900MHz

DUT: D1900V2-5d041

Communication System: CW; Frequency: 1900 MHz;Duty Cycle: 1:1
Medium: HSL_1900_220421 Medium parameters used: f = 1900 MHz; σ = 1.41 S/m; ε_r = 40.505; ρ = 1000 kg/m^3
Ambient Temperature：23.5 ℃; Liquid Temperature：22.5 ℃

DASY5 Configuration:
- Probe: EX3DV4 - SN3931; ConvF(8.25, 8.25, 8.25) @ 1900 MHz; Calibrated: 2021/10/21
- Sensor-Surface: 1.4mm (Mechanical Surface Detection)
- Electronics: DAE4 Sn1399; Calibrated: 2022/2/28
- Phantom: SAM-Middle; Type: SAM; Serial: TP-1503
- Measurement SW: DASY52, Version 52.10 (4);SEMCAD X Version 14.6.14 (7483)

Pin=50mW/Area Scan (61x61x1): Interpolated grid: dx=1.500 mm, dy=1.500 mm
Maximum value of SAR (interpolated) = 2.81 W/kg

Pin=50mW/Zoom Scan (5x5x7)/Cube 0: Measurement grid: dx=8mm, dy=8mm, dz=5mm
Reference Value = 44.98 V/m; Power Drift = -0.12 dB
Peak SAR (extrapolated) = 3.20 W/kg
SAR(1 g) = 1.93 W/kg; SAR(10 g) = 1.06 W/kg
Maximum value of SAR (measured) = 2.81 W/kg

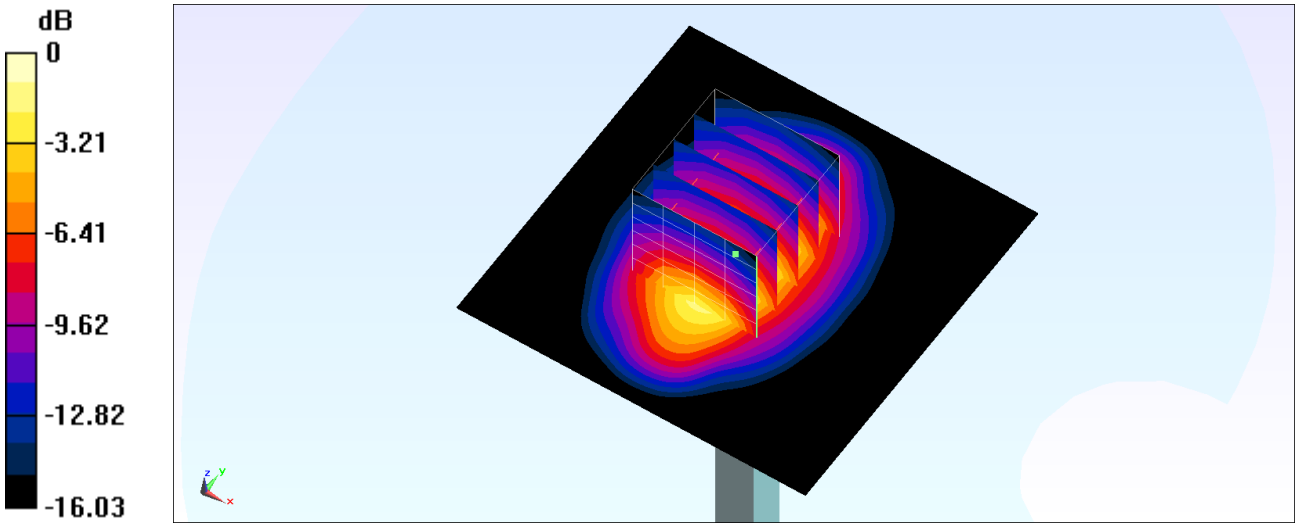

0 dB = 2.81 W/kg = 4.49 dBW/kg

System Check_Head_1900MHz

DUT: D1900V2-5d041

Communication System: CW; Frequency: 1900 MHz;Duty Cycle: 1:1
Medium: HSL_1900_220422 Medium parameters used: f = 1900 MHz; σ = 1.449 S/m; ε_r = 39.269; ρ = 1000 kg/m^3
Ambient Temperature：23.4 ℃; Liquid Temperature：22.4 ℃

DASY5 Configuration:
- Probe: EX3DV4 - SN3931; ConvF(8.25, 8.25, 8.25) @ 1900 MHz; Calibrated: 2021/10/21
- Sensor-Surface: 1.4mm (Mechanical Surface Detection)
- Electronics: DAE4 Sn1399; Calibrated: 2022/2/28
- Phantom: SAM-Middle; Type: SAM; Serial: TP-1503
- Measurement SW: DASY52, Version 52.10 (4);SEMCAD X Version 14.6.14 (7483)

Pin=50mW/Area Scan (61x61x1): Interpolated grid: dx=1.500 mm, dy=1.500 mm
Maximum value of SAR (interpolated) = 3.17 W/kg

Pin=50mW/Zoom Scan (5x5x7)/Cube 0: Measurement grid: dx=8mm, dy=8mm, dz=5mm
Reference Value = 48.43 V/m; Power Drift = -0.16 dB
Peak SAR (extrapolated) = 3.73 W/kg
SAR(1 g) = 2.02 W/kg; SAR(10 g) = 1.05 W/kg
Maximum value of SAR (measured) = 3.14 W/kg

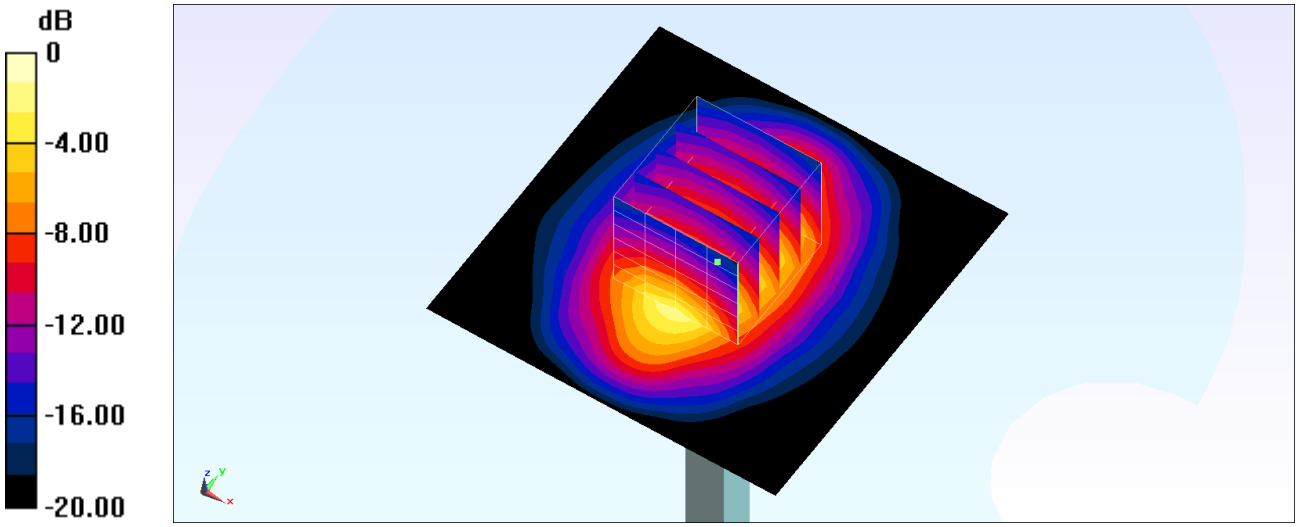

0 dB = 3.14 W/kg = 4.97 dBW/kg

System Check_Head_1900MHz

DUT: D1900V2-5d041

Communication System: CW; Frequency: 1900 MHz;Duty Cycle: 1:1
Medium: HSL_1900_220425 Medium parameters used: f = 1900 MHz; σ = 1.424 S/m; ε_r = 39.533; ρ = 1000 kg/m^3
Ambient Temperature：23.7 ℃; Liquid Temperature：22.7 ℃

DASY5 Configuration:
- Probe: EX3DV4 - SN3931; ConvF(8.25, 8.25, 8.25) @ 1900 MHz; Calibrated: 2021/10/21
- Sensor-Surface: 1.4mm (Mechanical Surface Detection)
- Electronics: DAE4 Sn1399; Calibrated: 2022/2/28
- Phantom: SAM-Middle; Type: SAM; Serial: TP-1503
- Measurement SW: DASY52, Version 52.10 (4);SEMCAD X Version 14.6.14 (7483)

Pin=50mW/Area Scan (61x61x1): Interpolated grid: dx=1.500 mm, dy=1.500 mm
Maximum value of SAR (interpolated) = 3.32 W/kg

Pin=50mW/Zoom Scan (5x5x7)/Cube 0: Measurement grid: dx=8mm, dy=8mm, dz=5mm
Reference Value = 48.84 V/m; Power Drift = -0.09 dB
Peak SAR (extrapolated) = 4.11 W/kg
SAR(1 g) = 2.1 W/kg; SAR(10 g) = 1.06 W/kg
Maximum value of SAR (measured) = 3.38 W/kg

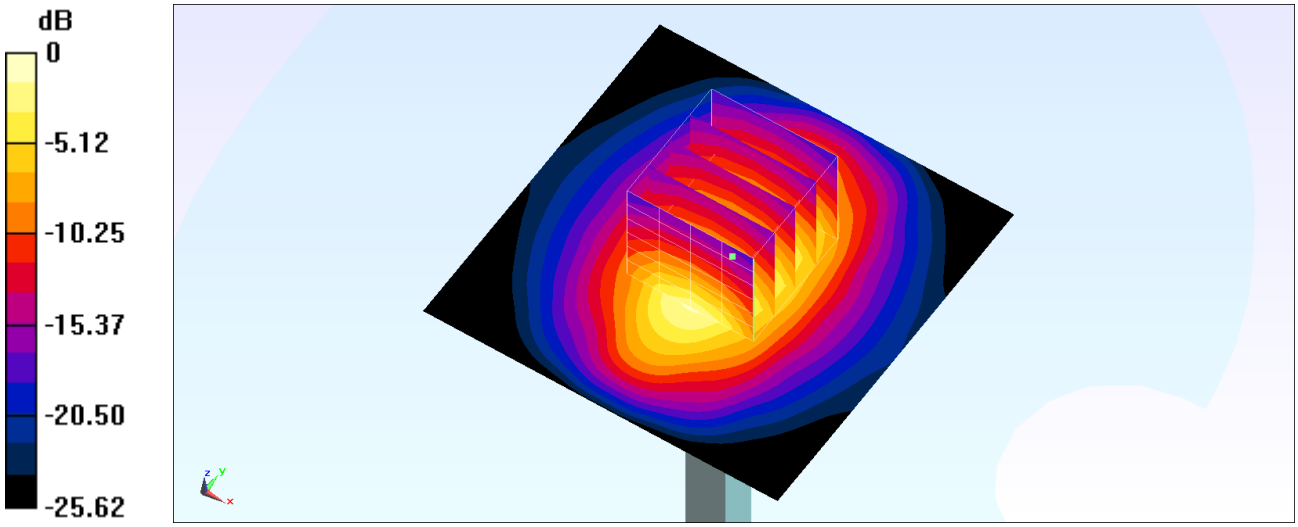

0 dB = 3.38 W/kg = 5.29 dBW/kg

System Check_Head_1900MHz

DUT: D1900V2-5d041

Communication System: CW; Frequency: 1900 MHz;Duty Cycle: 1:1
Medium: HSL_1900_220501 Medium parameters used: f = 1900 MHz; σ = 1.391 S/m; ε_r = 39.136; ρ = 1000 kg/m^3
Ambient Temperature：23.4 ℃; Liquid Temperature：22.4 ℃

DASY5 Configuration:
- Probe: EX3DV4 - SN3931; ConvF(8.25, 8.25, 8.25) @ 1900 MHz; Calibrated: 2021/10/21
- Sensor-Surface: 1.4mm (Mechanical Surface Detection)
- Electronics: DAE4 Sn1399; Calibrated: 2022/2/28
- Phantom: SAM-Middle; Type: SAM; Serial: TP-1503
- Measurement SW: DASY52, Version 52.10 (4);SEMCAD X Version 14.6.14 (7483)

Pin=50mW/Area Scan (61x61x1): Interpolated grid: dx=1.500 mm, dy=1.500 mm
Maximum value of SAR (interpolated) = 2.78 W/kg

Pin=50mW/Zoom Scan (5x5x7)/Cube 0: Measurement grid: dx=8mm, dy=8mm, dz=5mm
Reference Value = 44.98 V/m; Power Drift = -0.01 dB
Peak SAR (extrapolated) = 3.15 W/kg
SAR(1 g) = 1.9 W/kg; SAR(10 g) = 1.04 W/kg
Maximum value of SAR (measured) = 2.77 W/kg

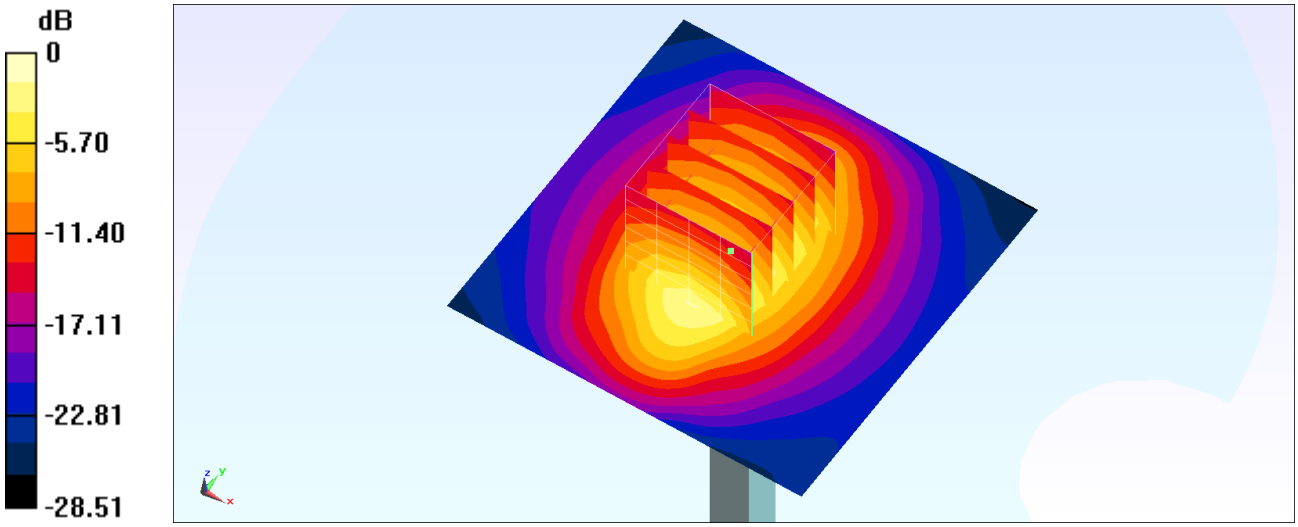

0 dB = 2.77 W/kg = 4.42 dBW/kg

System Check_Head_1900MHz

DUT: D1900V2-5d041

Communication System: CW; Frequency: 1900 MHz;Duty Cycle: 1:1
Medium: HSL_1900_220504 Medium parameters used: f = 1900 MHz; σ = 1.398 S/m; ε_r = 39.26; ρ = 1000 kg/m^3
Ambient Temperature：23.2 ℃; Liquid Temperature：22.2 ℃

DASY5 Configuration:
- Probe: EX3DV4 - SN3931; ConvF(8.25, 8.25, 8.25) @ 1900 MHz; Calibrated: 2021/10/21
- Sensor-Surface: 1.4mm (Mechanical Surface Detection)
- Electronics: DAE4 Sn1399; Calibrated: 2022/2/28
- Phantom: SAM-Middle; Type: SAM; Serial: TP-1503
- Measurement SW: DASY52, Version 52.10 (4);SEMCAD X Version 14.6.14 (7483)

Pin=50mW/Area Scan (61x61x1): Interpolated grid: dx=1.500 mm, dy=1.500 mm
Maximum value of SAR (interpolated) = 3.06 W/kg

Pin=50mW/Zoom Scan (5x5x7)/Cube 0: Measurement grid: dx=8mm, dy=8mm, dz=5mm
Reference Value = 48.43 V/m; Power Drift = -0.12 dB
Peak SAR (extrapolated) = 3.60 W/kg
SAR(1 g) = 1.95 W/kg; SAR(10 g) = 1.02 W/kg
Maximum value of SAR (measured) = 3.03 W/kg

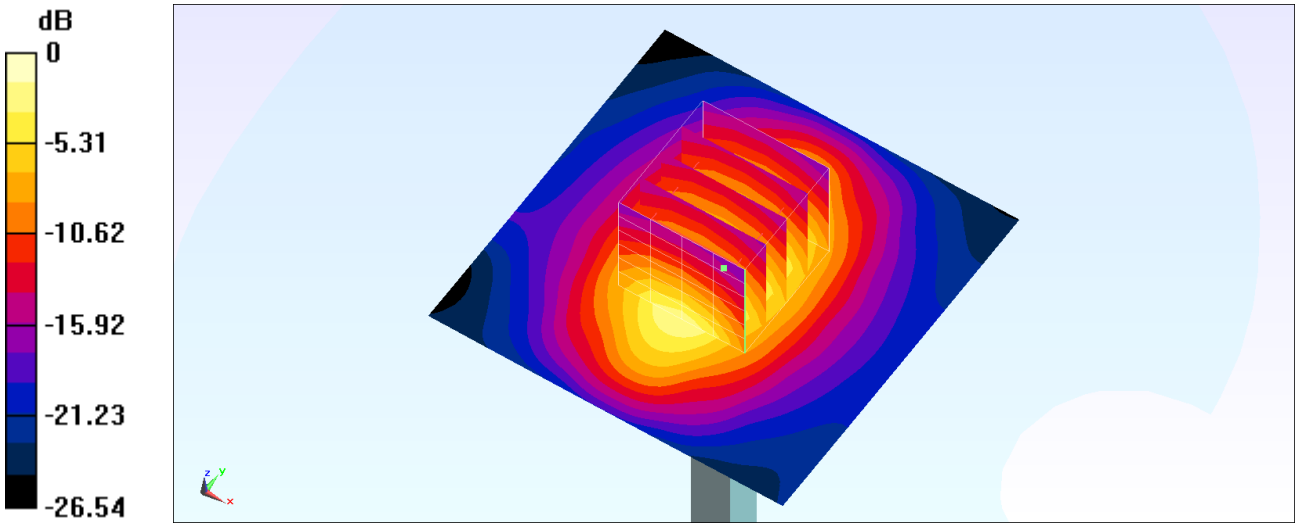

0 dB = 3.03 W/kg = 4.81 dBW/kg

System Check_Head_1900MHz

DUT: D1900V2-5d041

Communication System: CW; Frequency: 1900 MHz;Duty Cycle: 1:1
Medium: HSL_1900_220510 Medium parameters used: f = 1900 MHz; σ = 1.374 S/m; ε_r = 40.28; ρ = 1000 kg/m^3
Ambient Temperature：23.5 ℃; Liquid Temperature：22.5 ℃

DASY5 Configuration:
- Probe: EX3DV4 - SN7625; ConvF(8.19, 8.19, 8.19) @ 1900 MHz; Calibrated: 2022/1/27
- Sensor-Surface: 1.4mm (Mechanical Surface Detection)
- Electronics: DAE4 Sn1696; Calibrated: 2021/11/3
- Phantom: SAM_Left; Type: SAM; Serial: TP:1682
- Measurement SW: DASY52, Version 52.10 (4);SEMCAD X Version 14.6.14 (7501)

Pin=250mW/Area Scan (61x61x1): Interpolated grid: dx=1.500 mm, dy=1.500 mm
Maximum value of SAR (interpolated) = 14.7 W/kg
Pin=250mW/Zoom Scan (5x5x7)/Cube 0: Measurement grid: dx=8mm, dy=8mm, dz=5mm
Reference Value = 104.0 V/m; Power Drift = 0.16 dB
Peak SAR (extrapolated) = 18.2 W/kg
SAR(1 g) = 9.57 W/kg; SAR(10 g) = 4.94 W/kg
Maximum value of SAR (measured) = 15.2 W/kg

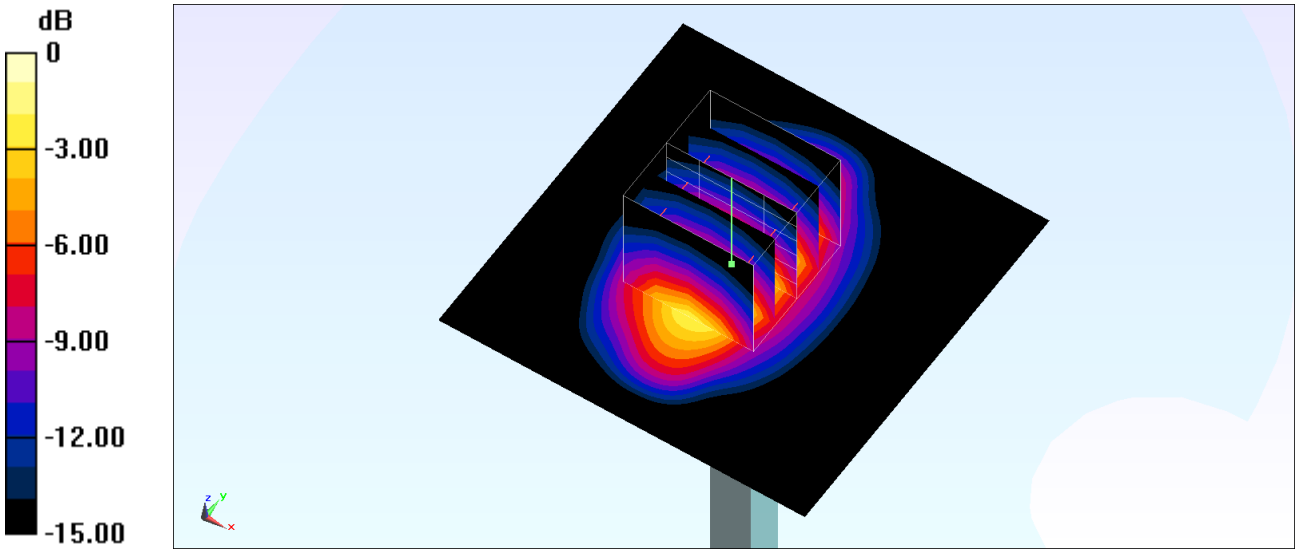

0 dB = 15.2 W/kg = 11.82 dBW/kg

System Check_Head_1900MHz

DUT: D1900V2-5d041

Communication System: CW ; Frequency: 1900 MHz;Duty Cycle: 1:1
Medium: HSL_1900_220510 Medium parameters used: f = 1900 MHz; σ = 1.388 S/m; ε_r = 40.366; ρ = 1000 kg/m^3
Ambient Temperature：23.4 ℃; Liquid Temperature：22.4 ℃

DASY5 Configuration:
- Probe: ES3DV3 - SN3115; ConvF(5.06, 5.06, 5.06) @ 1900 MHz; Calibrated: 2021/11/23
- Sensor-Surface: 3mm (Mechanical Surface Detection)
- Electronics: DAE4 Sn656; Calibrated: 2022/1/19
- Phantom: SAM_Left; Type: SAM; Serial: 1796
- Measurement SW: DASY52, Version 52.10 (4);SEMCAD X Version 14.6.14 (7501)

Pin=250mW/Area Scan (61x61x1): Interpolated grid: dx=1.500 mm, dy=1.500 mm
Maximum value of SAR (interpolated) = 12.9 W/kg

Pin=250mW/Zoom Scan (5x5x7)/Cube 0: Measurement grid: dx=8mm, dy=8mm, dz=5mm
Reference Value = 94.44 V/m; Power Drift = 0.14 dB
Peak SAR (extrapolated) = 18.4 W/kg
SAR(1 g) = 10 W/kg; SAR(10 g) = 5.22 W/kg
Maximum value of SAR (measured) = 12.6 W/kg

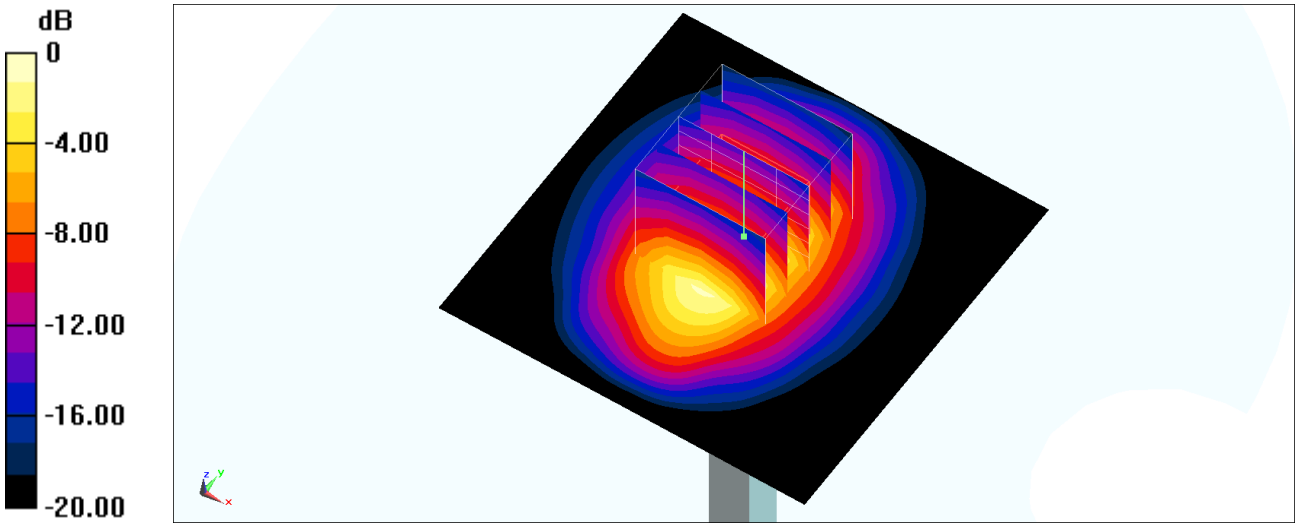

0 dB = 12.6 W/kg = 11.00 dBW/kg

System Check_Head_1900MHz

DUT: D1900V2-5d041

Communication System: CW; Frequency: 1900 MHz;Duty Cycle: 1:1
Medium: HSL_1900_220511 Medium parameters used: f = 1900 MHz; σ = 1.382 S/m; ε_r = 40.52; ρ = 1000 kg/m^3
Ambient Temperature：23.6 ℃; Liquid Temperature：22.6 ℃

DASY5 Configuration:
- Probe: EX3DV4 - SN7625; ConvF(8.19, 8.19, 8.19) @ 1900 MHz; Calibrated: 2022/1/27
- Sensor-Surface: 1.4mm (Mechanical Surface Detection)
- Electronics: DAE4 Sn1696; Calibrated: 2021/11/3
- Phantom: SAM_Left; Type: SAM; Serial: TP:1682
- Measurement SW: DASY52, Version 52.10 (4);SEMCAD X Version 14.6.14 (7501)

Pin=250mW/Area Scan (61x61x1): Interpolated grid: dx=1.500 mm, dy=1.500 mm
Maximum value of SAR (interpolated) = 14.9 W/kg
Pin=250mW/Zoom Scan (5x5x7)/Cube 0: Measurement grid: dx=8mm, dy=8mm, dz=5mm
Reference Value = 105.8 V/m; Power Drift = -0.08 dB
Peak SAR (extrapolated) = 16.9 W/kg
SAR(1 g) = 9.35 W/kg; SAR(10 g) = 4.94 W/kg
Maximum value of SAR (measured) = 14.2 W/kg

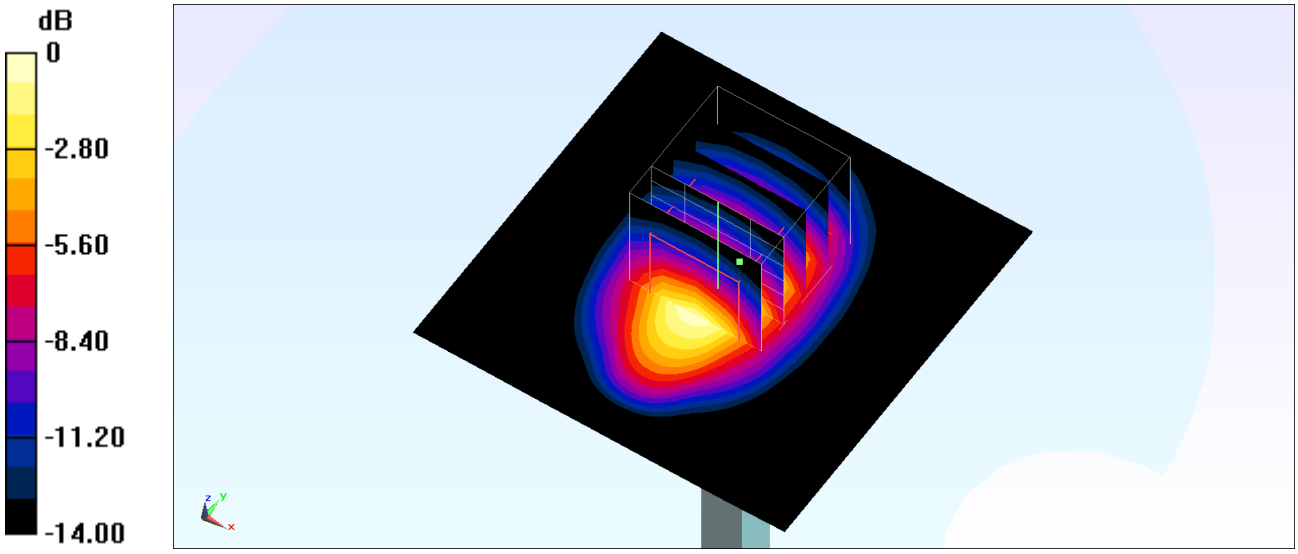

0 dB = 14.2 W/kg = 11.52 dBW/kg

System Check_Head_1900MHz

DUT: D1900V2-5d041

Communication System: CW; Frequency: 1900 MHz;Duty Cycle: 1:1
Medium: HSL_1900_220511 Medium parameters used: f = 1900 MHz; σ = 1.45 S/m; ε_r = 39.479; ρ = 1000 kg/m^3
Ambient Temperature：23.6 ℃; Liquid Temperature：22.6 ℃

DASY5 Configuration:
- Probe: ES3DV3 - SN3270; ConvF(5.26, 5.26, 5.26) @ 1900 MHz; Calibrated: 2021/9/21
- Sensor-Surface: 3mm (Mechanical Surface Detection)
- Electronics: DAE4 Sn1512; Calibrated: 2022/3/29
- Phantom: SAM_Left; Type: SAM; Serial: 1796
- Measurement SW: DASY52, Version 52.10 (4);SEMCAD X Version 14.6.14 (7501)

Pin=250mW/Area Scan (61x61x1): Interpolated grid: dx=1.500 mm, dy=1.500 mm
Maximum value of SAR (interpolated) = 13.6 W/kg

Pin=250mW/Zoom Scan (6x6x7)/Cube 0: Measurement grid: dx=8mm, dy=8mm, dz=5mm
Reference Value = 96.08 V/m; Power Drift = -0.11 dB
Peak SAR (extrapolated) = 18.6 W/kg
SAR(1 g) = 10.2 W/kg; SAR(10 g) = 5.39 W/kg
Maximum value of SAR (measured) = 12.7 W/kg

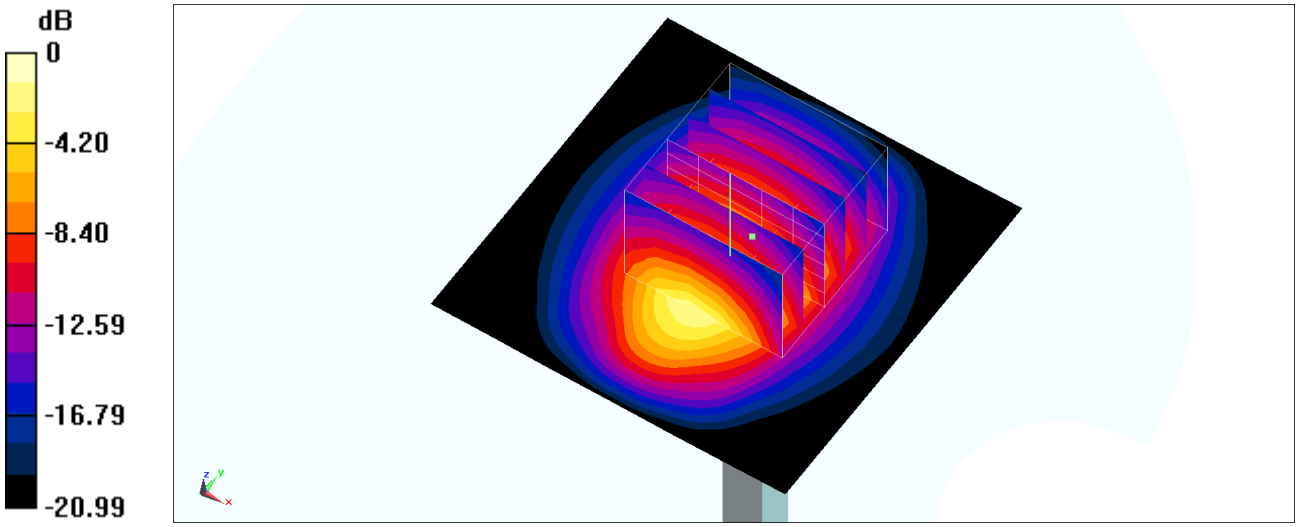

0 dB = 12.7 W/kg = 11.04 dBW/kg

System Check_Head_1900MHz

DUT: D1900V2-5d041

Communication System: CW; Frequency: 1900 MHz;Duty Cycle: 1:1
Medium: HSL_1900_220514 Medium parameters used: f = 1900 MHz; σ = 1.447 S/m; ε_r = 39.446; ρ = 1000 kg/m^3
Ambient Temperature：23.1 ℃; Liquid Temperature：22.1 ℃

DASY5 Configuration:
- Probe: EX3DV4 - SN3931; ConvF(8.25, 8.25, 8.25) @ 1900 MHz; Calibrated: 2021/10/21
- Sensor-Surface: 1.4mm (Mechanical Surface Detection)
- Electronics: DAE4 Sn1399; Calibrated: 2022/2/28
- Phantom: SAM_Left; Type: SAM; Serial: 1796
- Measurement SW: DASY52, Version 52.10 (4);SEMCAD X Version 14.6.14 (7501)

Pin=50mW/Area Scan (61x61x1): Interpolated grid: dx=1.500 mm, dy=1.500 mm
Maximum value of SAR (interpolated) = 3.09 W/kg

Pin=50mW/Zoom Scan (5x5x7)/Cube 0: Measurement grid: dx=8mm, dy=8mm, dz=5mm
Reference Value = 47.79 V/m; Power Drift = -0.05 dB
Peak SAR (extrapolated) = 3.64 W/kg
SAR(1 g) = 1.99 W/kg; SAR(10 g) = 1.04 W/kg
Maximum value of SAR (measured) = 3.08 W/kg

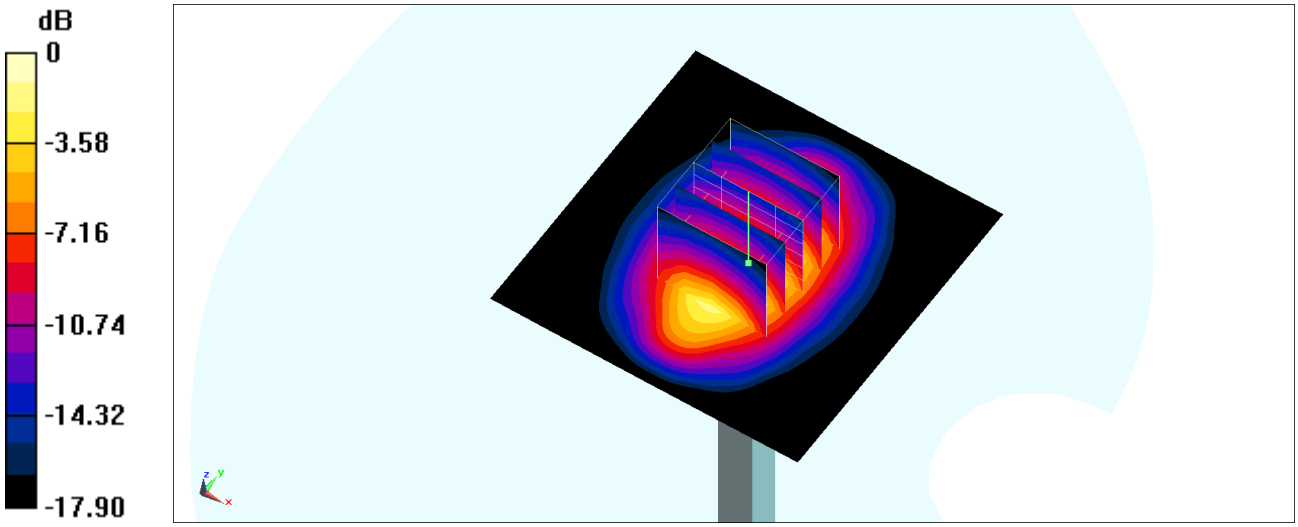

0 dB = 3.08 W/kg = 4.89 dBW/kg

System Check_Head_1900MHz

DUT: D1900V2-5d041

Communication System: CW; Frequency: 1900 MHz;Duty Cycle: 1:1
Medium: HSL_1900_220517 Medium parameters used: f = 1900 MHz; σ = 1.406 S/m; ε_r = 39.861; ρ = 1000 kg/m^3
Ambient Temperature：23.3 ℃; Liquid Temperature：22.3 ℃

DASY5 Configuration:
- Probe: EX3DV4 - SN7694; ConvF(8.38, 8.38, 8.38) @ 1900 MHz; Calibrated: 2022/1/24
- Sensor-Surface: 1.4mm (Mechanical Surface Detection)
- Electronics: DAE4 Sn1424; Calibrated: 2022/1/20
- Phantom: SAM-Middle; Type: SAM; Serial: TP-1503
- Measurement SW: DASY52, Version 52.10 (4);SEMCAD X Version 14.6.14 (7483)

Pin=50mW/Area Scan (61x61x1): Interpolated grid: dx=1.500 mm, dy=1.500 mm
Maximum value of SAR (interpolated) = 3.00 W/kg

Pin=50mW/Zoom Scan (5x5x7)/Cube 0: Measurement grid: dx=8mm, dy=8mm, dz=5mm
Reference Value = 45.35 V/m; Power Drift = 0.10 dB
Peak SAR (extrapolated) = 3.68 W/kg
SAR(1 g) = 1.92 W/kg; SAR(10 g) = 0.993 W/kg
Maximum value of SAR (measured) = 3.06 W/kg

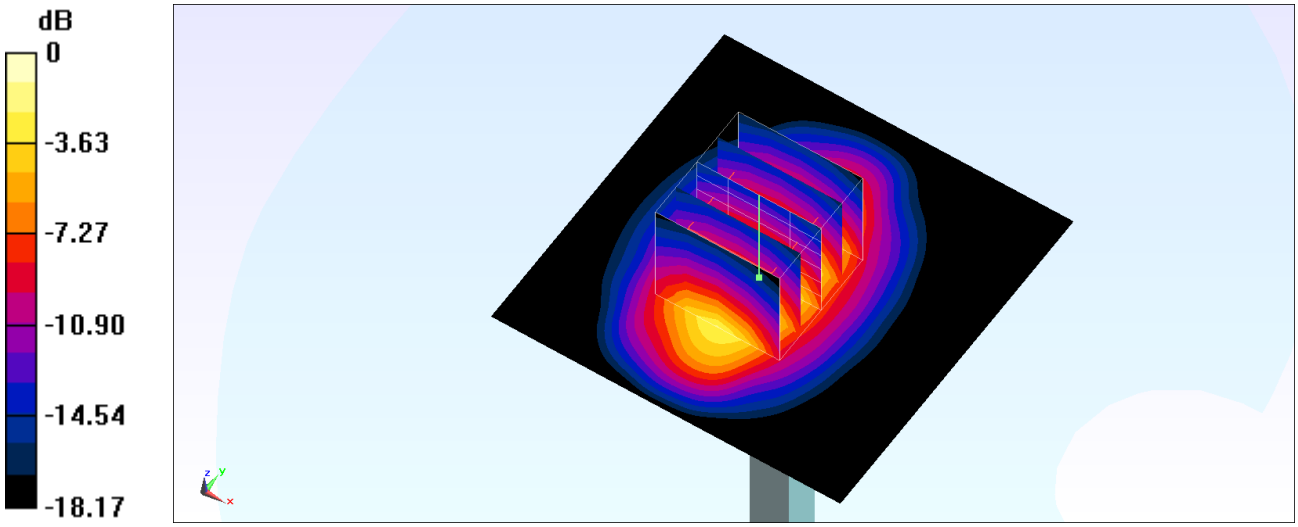

0 dB = 3.06 W/kg = 4.86 dBW/kg

System Check_Head_2300MHz

DUT: D2300V2-1006

Communication System: CW; Frequency: 2300 MHz;Duty Cycle: 1:1
Medium: HSL_2300_220414 Medium parameters used: f = 2300 MHz; σ = 1.61 S/m; ε_r = 40.055; ρ = 1000 kg/m^3
Ambient Temperature：23.8 ℃; Liquid Temperature：22.8 ℃

DASY5 Configuration:
- Probe: EX3DV4 - SN3931; ConvF(7.77, 7.77, 7.77) @ 2300 MHz; Calibrated: 2021/10/21
- Sensor-Surface: 1.4mm (Mechanical Surface Detection)
- Electronics: DAE4 Sn1399; Calibrated: 2022/2/28
- Phantom: SAM-Middle; Type: SAM; Serial: TP-1503
- Measurement SW: DASY52, Version 52.10 (4);SEMCAD X Version 14.6.14 (7483)

Pin=50mW/Area Scan (71x71x1): Interpolated grid: dx=1.200 mm, dy=1.200 mm
Maximum value of SAR (interpolated) = 3.86 W/kg

Pin=50mW/Zoom Scan (7x7x7)/Cube 0: Measurement grid: dx=5mm, dy=5mm, dz=5mm
Reference Value = 49.59 V/m; Power Drift = -0.13 dB
Peak SAR (extrapolated) = 4.59 W/kg
SAR(1 g) = 2.36 W/kg; SAR(10 g) = 1.14 W/kg
Maximum value of SAR (measured) = 3.80 W/kg

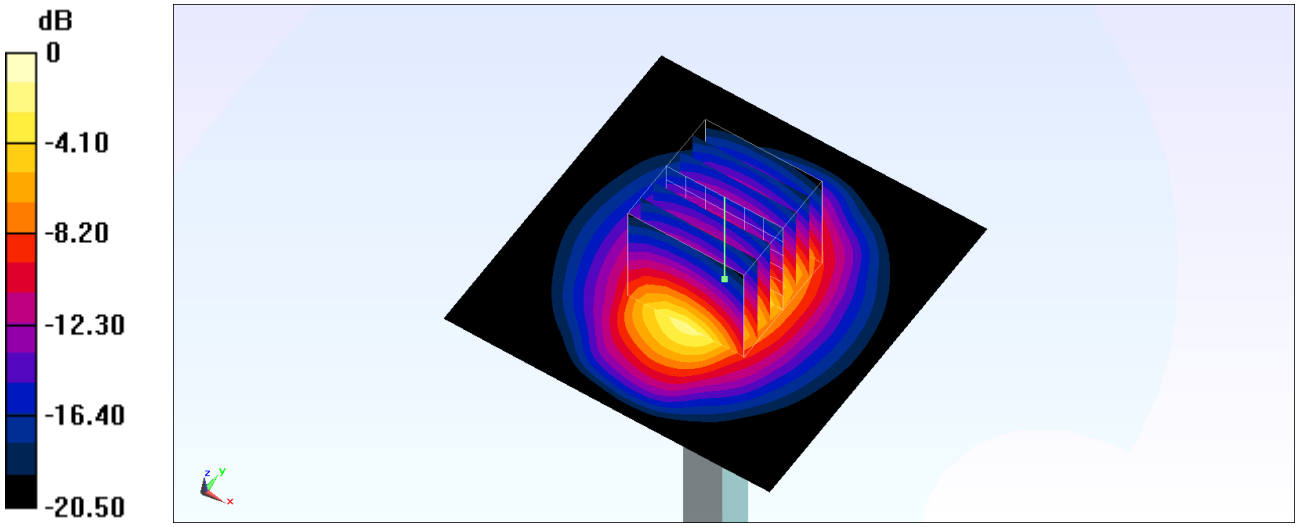

0 dB = 3.80 W/kg = 5.80 dBW/kg

System Check_Head_2300MHz

DUT: D2300V2-1006

Communication System: CW; Frequency: 2300 MHz;Duty Cycle: 1:1
Medium: HSL_2300_220418 Medium parameters used: f = 2300 MHz; σ = 1.612 S/m; ε_r = 40.068; ρ = 1000 kg/m^3
Ambient Temperature：23.2 ℃; Liquid Temperature：22.2 ℃

DASY5 Configuration:
- Probe: EX3DV4 - SN3931; ConvF(7.77, 7.77, 7.77) @ 2300 MHz; Calibrated: 2021/10/21
- Sensor-Surface: 1.4mm (Mechanical Surface Detection)
- Electronics: DAE4 Sn1399; Calibrated: 2022/2/28
- Phantom: SAM-Middle; Type: SAM; Serial: TP-1503
- Measurement SW: DASY52, Version 52.10 (4);SEMCAD X Version 14.6.14 (7483)

Pin=250mW/Area Scan (71x71x1): Interpolated grid: dx=1.200 mm, dy=1.200 mm
Maximum value of SAR (interpolated) = 20.1 W/kg

Pin=250mW/Zoom Scan (7x7x7)/Cube 0: Measurement grid: dx=5mm, dy=5mm, dz=5mm
Reference Value = 114.3 V/m; Power Drift = -0.01 dB
Peak SAR (extrapolated) = 24.4 W/kg
SAR(1 g) = 12.2 W/kg; SAR(10 g) = 5.87 W/kg
Maximum value of SAR (measured) = 20.1 W/kg

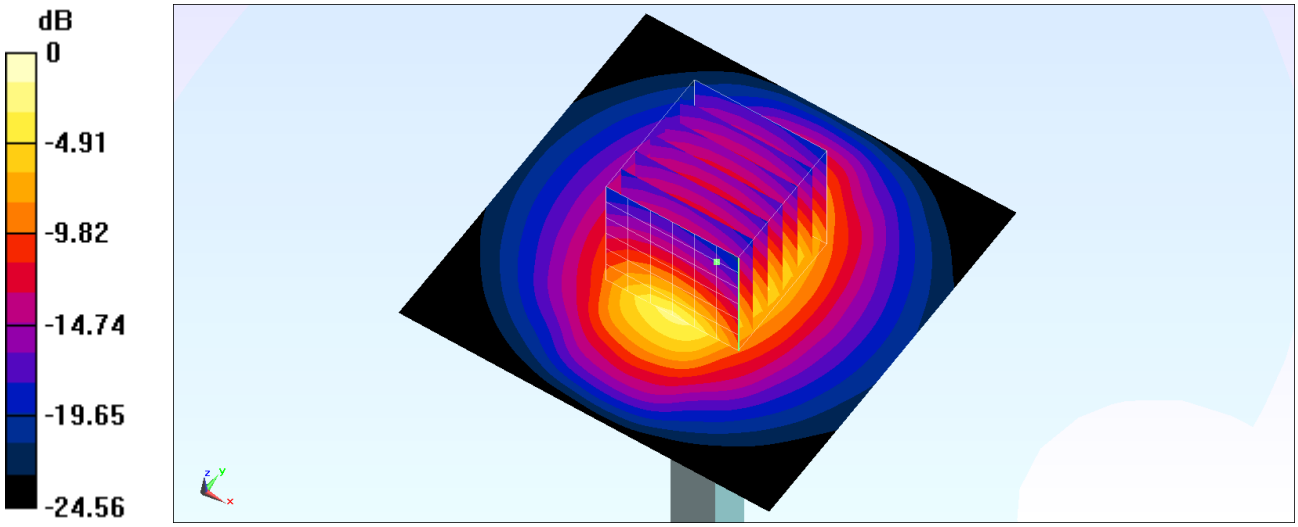

0 dB = 20.1 W/kg = 13.03 dBW/kg

System Check_Head_2300MHz

DUT: D2300V2-1006

Communication System: CW; Frequency: 2300 MHz;Duty Cycle: 1:1
Medium: HSL_2300_220424 Medium parameters used: f = 2300 MHz; σ = 1.593 S/m; ε_r = 39.17; ρ = 1000 kg/m^3
Ambient Temperature：23.4 ℃; Liquid Temperature：22.4 ℃

DASY5 Configuration:
- Probe: EX3DV4 - SN3931; ConvF(7.77, 7.77, 7.77) @ 2300 MHz; Calibrated: 2021/10/21
- Sensor-Surface: 1.4mm (Mechanical Surface Detection)
- Electronics: DAE4 Sn1399; Calibrated: 2022/2/28
- Phantom: SAM-Middle; Type: SAM; Serial: TP-1503
- Measurement SW: DASY52, Version 52.10 (4);SEMCAD X Version 14.6.14 (7483)

Pin=50mW/Area Scan (71x71x1): Interpolated grid: dx=1.200 mm, dy=1.200 mm
Maximum value of SAR (interpolated) = 3.66 W/kg

Pin=50mW/Zoom Scan (7x7x7)/Cube 0: Measurement grid: dx=5mm, dy=5mm, dz=5mm
Reference Value = 48.56 V/m; Power Drift = -0.16 dB
Peak SAR (extrapolated) = 4.13 W/kg
SAR(1 g) = 2.33 W/kg; SAR(10 g) = 1.19 W/kg
Maximum value of SAR (measured) = 3.56 W/kg

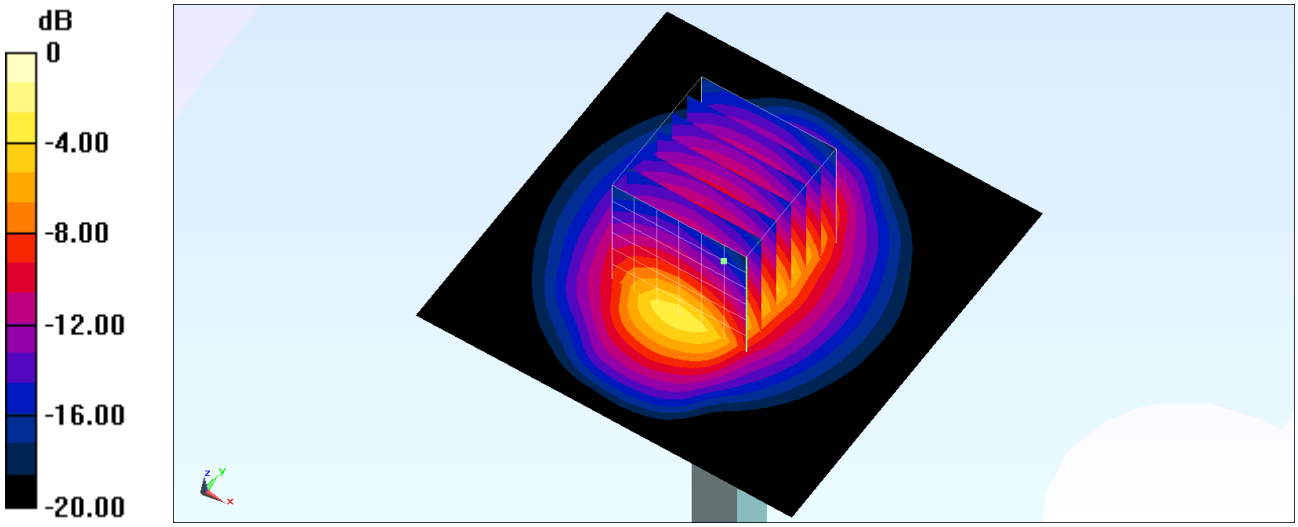

0 dB = 3.56 W/kg = 5.51 dBW/kg

System Check_Head_2300MHz

DUT: D2300V2-1006

Communication System: CW; Frequency: 2300 MHz;Duty Cycle: 1:1
Medium: HSL_2300_220430 Medium parameters used: f = 2300 MHz; σ = 1.626 S/m; ε_r = 40.221; ρ = 1000 kg/m^3
Ambient Temperature：23.2 ℃; Liquid Temperature：22.2 ℃

DASY5 Configuration:
- Probe: EX3DV4 - SN3931; ConvF(7.77, 7.77, 7.77) @ 2300 MHz; Calibrated: 2021/10/21
- Sensor-Surface: 1.4mm (Mechanical Surface Detection)
- Electronics: DAE4 Sn1399; Calibrated: 2022/2/28
- Phantom: SAM-Middle; Type: SAM; Serial: TP-1503
- Measurement SW: DASY52, Version 52.10 (4);SEMCAD X Version 14.6.14 (7483)

Pin=50mW/Area Scan (71x71x1): Interpolated grid: dx=1.200 mm, dy=1.200 mm
Maximum value of SAR (interpolated) = 3.89 W/kg

Pin=50mW/Zoom Scan (7x7x7)/Cube 0: Measurement grid: dx=5mm, dy=5mm, dz=5mm
Reference Value = 50.23 V/m; Power Drift = -0.05 dB
Peak SAR (extrapolated) = 4.77 W/kg
SAR(1 g) = 2.35 W/kg; SAR(10 g) = 1.12 W/kg
Maximum value of SAR (measured) = 3.90 W/kg

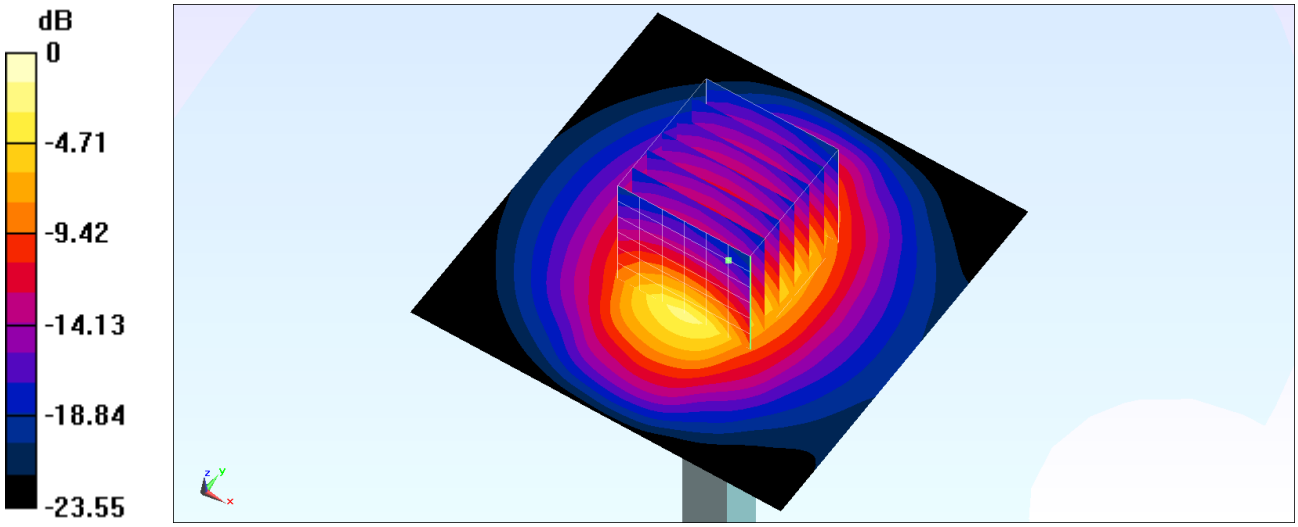

0 dB = 3.90 W/kg = 5.91 dBW/kg

System Check_Head_2300MHz

DUT: D2300V2-1006

Communication System: CW; Frequency: 2300 MHz;Duty Cycle: 1:1
Medium: HSL_2300_220511 Medium parameters used: f = 2300 MHz; σ = 1.688 S/m; ε_r = 39.973; ρ = 1000 kg/m^3
Ambient Temperature：23.6 ℃; Liquid Temperature：22.6 ℃

DASY5 Configuration:
- Probe: ES3DV3 - SN3270; ConvF(4.91, 4.91, 4.91) @ 2300 MHz; Calibrated: 2021/9/21
- Sensor-Surface: 3mm (Mechanical Surface Detection)
- Electronics: DAE4 Sn1512; Calibrated: 2022/3/29
- Phantom: SAM_Left; Type: SAM; Serial: 1796
- Measurement SW: DASY52, Version 52.10 (4);SEMCAD X Version 14.6.14 (7501)

Pin=250mW/Area Scan (81x81x1): Interpolated grid: dx=1.200 mm, dy=1.200 mm
Maximum value of SAR (interpolated) = 16.3 W/kg

Pin=250mW/Zoom Scan (7x7x7)/Cube 0: Measurement grid: dx=5mm, dy=5mm, dz=5mm
Reference Value = 96.81 V/m; Power Drift = 0.03 dB
Peak SAR (extrapolated) = 24.3 W/kg
SAR(1 g) = 12.5 W/kg; SAR(10 g) = 6.1 W/kg
Maximum value of SAR (measured) = 16.0 W/kg

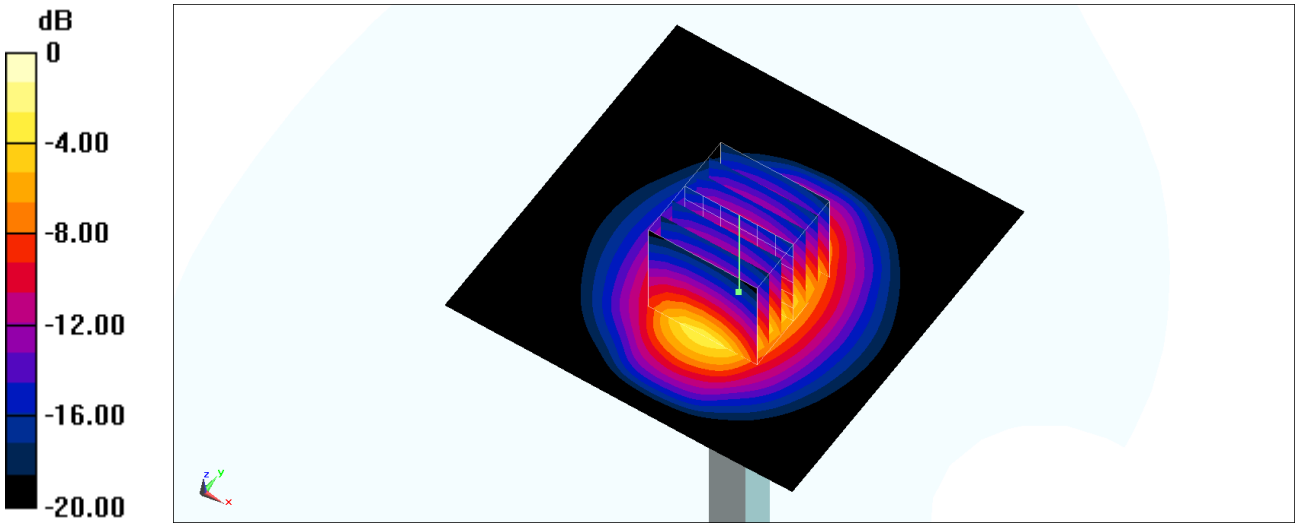

0 dB = 16.0 W/kg = 12.04 dBW/kg

System Check_Head_2300MHz

DUT: D2300V2-1006

Communication System: CW; Frequency: 2300 MHz;Duty Cycle: 1:1
Medium: HSL_2300_220513 Medium parameters used: f = 2300 MHz; σ = 1.646 S/m; ε_r = 40.16; ρ = 1000 kg/m^3
Ambient Temperature：23.3 ℃; Liquid Temperature：22.3 ℃

DASY5 Configuration:
- Probe: EX3DV4 - SN3931; ConvF(7.77, 7.77, 7.77) @ 2300 MHz; Calibrated: 2021/10/21
- Sensor-Surface: 1.4mm (Mechanical Surface Detection)
- Electronics: DAE4 Sn1399; Calibrated: 2022/2/28
- Phantom: SAM_Left; Type: SAM; Serial: 1796
- Measurement SW: DASY52, Version 52.10 (4);SEMCAD X Version 14.6.14 (7501)

Pin=50mW/Area Scan (71x71x1): Interpolated grid: dx=1.200 mm, dy=1.200 mm
Maximum value of SAR (interpolated) = 3.95 W/kg

Pin=50mW/Zoom Scan (7x7x7)/Cube 0: Measurement grid: dx=5mm, dy=5mm, dz=5mm
Reference Value = 49.59 V/m; Power Drift = -0.13 dB
Peak SAR (extrapolated) = 4.70 W/kg
SAR(1 g) = 2.41 W/kg; SAR(10 g) = 1.16 W/kg
Maximum value of SAR (measured) = 3.89 W/kg

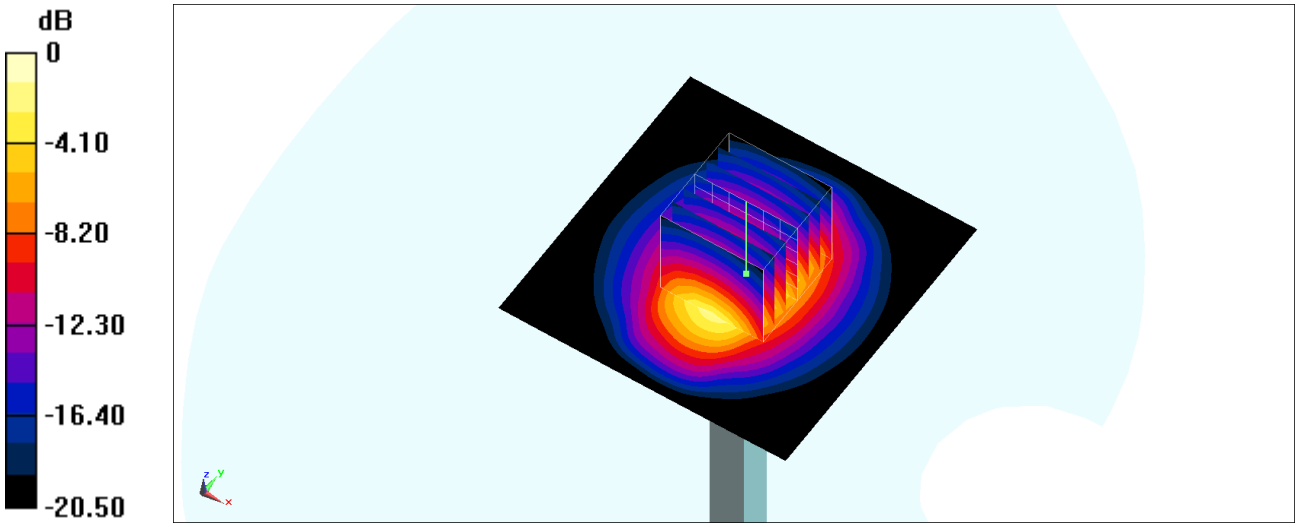

0 dB = 3.89 W/kg = 5.90 dBW/kg

System Check_Head_2300MHz

DUT: D2300V2-1006

Communication System: CW; Frequency: 2300 MHz;Duty Cycle: 1:1
Medium: HSL_2300_220516 Medium parameters used: f = 2300 MHz; σ = 1.612 S/m; ε_r = 41.306; ρ = 1000 kg/m^3
Ambient Temperature：23.3 ℃; Liquid Temperature：22.3 ℃

DASY5 Configuration:
- Probe: EX3DV4 - SN7694; ConvF(8.26, 8.26, 8.26) @ 2300 MHz; Calibrated: 2022/1/24
- Sensor-Surface: 1.4mm (Mechanical Surface Detection)
- Electronics: DAE4 Sn1424; Calibrated: 2022/1/20
- Phantom: SAM-Middle; Type: SAM; Serial: TP-1503
- Measurement SW: DASY52, Version 52.10 (4);SEMCAD X Version 14.6.14 (7483)

Pin=50mW/Area Scan (71x71x1): Interpolated grid: dx=1.200 mm, dy=1.200 mm
Maximum value of SAR (interpolated) = 3.74 W/kg

Pin=50mW/Zoom Scan (7x7x7)/Cube 0: Measurement grid: dx=5mm, dy=5mm, dz=5mm
Reference Value = 46.25 V/m; Power Drift = 0.02 dB
Peak SAR (extrapolated) = 4.58 W/kg
SAR(1 g) = 2.25 W/kg; SAR(10 g) = 1.08 W/kg
Maximum value of SAR (measured) = 3.73 W/kg

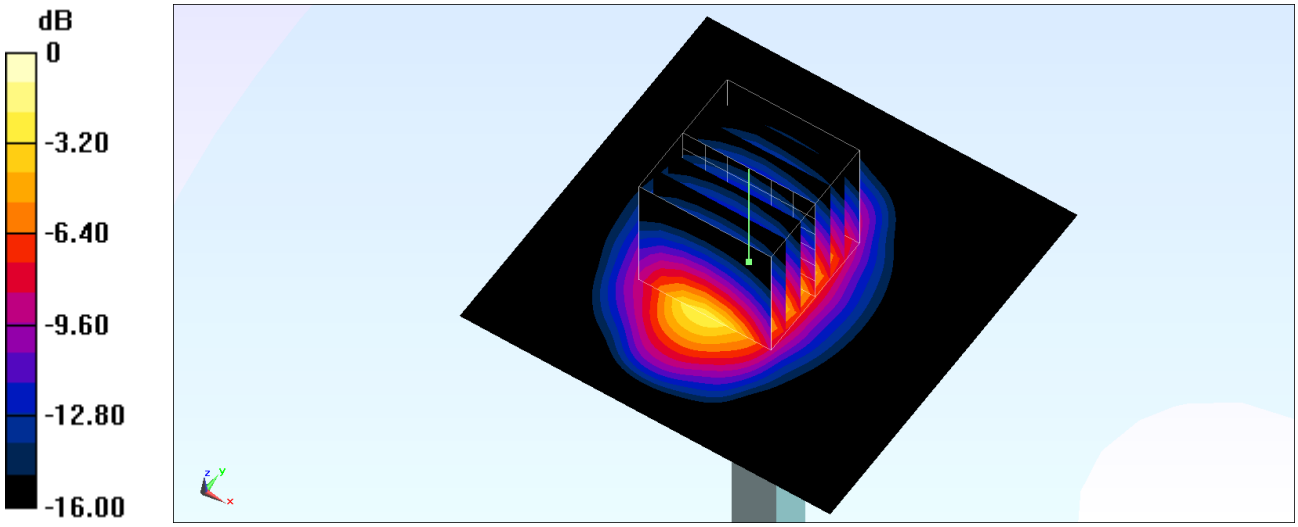

0 dB = 3.73 W/kg = 5.72 dBW/kg

System Check_Head_2450MHz

DUT: D2450V2-736

Communication System: CW; Frequency: 2450 MHz;Duty Cycle: 1:1
Medium: HSL_2450_220408 Medium parameters used : f = 2450 MHz; σ = 1.749 S/m; ε_r = 39.174; ρ = 1000 kg/m^3
Ambient Temperature：23.1 ℃; Liquid Temperature：22.1 ℃

DASY5 Configuration:
- Probe: EX3DV4 - SN7625; ConvF(7.91, 7.91, 7.91) @ 2450 MHz; Calibrated: 2022/1/27
- Sensor-Surface: 1.4mm (Mechanical Surface Detection)
- Electronics: DAE4 Sn1696; Calibrated: 2021/11/3
- Phantom: SAM_Left; Type: SAM; Serial: TP:1682
- Measurement SW: DASY52, Version 52.10 (4);SEMCAD X Version 14.6.14 (7501)

Pin=250mW/Area Scan (81x81x1): Interpolated grid: dx=1.200 mm, dy=1.200 mm
Maximum value of SAR (interpolated) = 20.2 W/kg

Pin=250mW/Zoom Scan (7x7x7)/Cube 0: Measurement grid: dx=5mm, dy=5mm, dz=5mm
Reference Value = 112.6 V/m; Power Drift = -0.12 dB
Peak SAR (extrapolated) = 24.6 W/kg
SAR(1 g) = 12.5 W/kg; SAR(10 g) = 5.99 W/kg
Maximum value of SAR (measured) = 20.2 W/kg

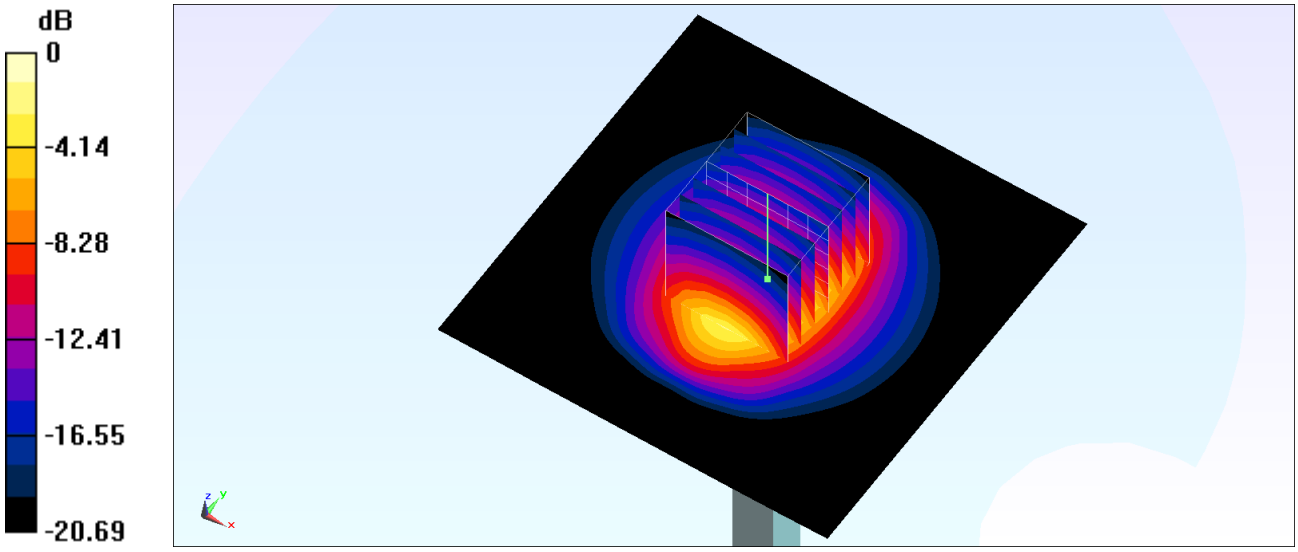

0 dB = 20.2 W/kg = 13.05 dBW/kg

System Check_Head_2450MHz

DUT: D2450V2-929

Communication System: CW; Frequency: 2450 MHz;Duty Cycle: 1:1
Medium: HSL_2450_220428 Medium parameters used : f = 2450 MHz; σ = 1.815 S/m; ε_r = 40.004; ρ = 1000 kg/m^3
Ambient Temperature：23.8 ℃; Liquid Temperature：22.8 ℃

DASY5 Configuration:
- Probe: ES3DV3 - SN3270; ConvF(4.62, 4.62, 4.62) @ 2450 MHz; Calibrated: 2021/9/21
- Sensor-Surface: 3mm (Mechanical Surface Detection)
- Electronics: DAE4 Sn1512; Calibrated: 2022/3/29
- Phantom: SAM_Left; Type: QD000P40CD; Serial: TP:1684
- Measurement SW: DASY52, Version 52.10 (4);SEMCAD X Version 14.6.14 (7483)

Pin=250mW/Area Scan (61x61x1): Interpolated grid: dx=1.200 mm, dy=1.200 mm
Maximum value of SAR (interpolated) = 18.4 W/kg

Pin=250mW/Zoom Scan (7x7x7)/Cube 0: Measurement grid: dx=5mm, dy=5mm, dz=5mm
Reference Value = 101.2 V/m; Power Drift = -0.07 dB
Peak SAR (extrapolated) = 26.3 W/kg
SAR(1 g) = 13.7 W/kg; SAR(10 g) = 6.58 W/kg
Maximum value of SAR (measured) = 17.8 W/kg

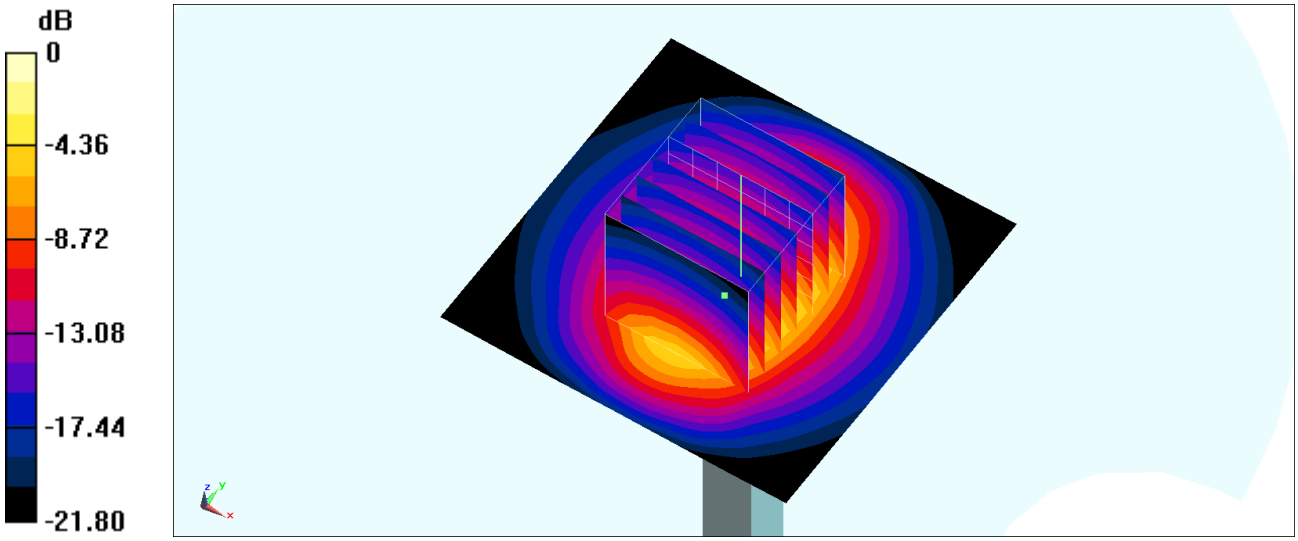

0 dB = 17.8 W/kg = 12.50 dBW/kg

System Check_Head_2450MHz

DUT: D2450V2-929

Communication System: CW; Frequency: 2450 MHz;Duty Cycle: 1:1
Medium: HSL_2450_220429 Medium parameters used : f = 2450 MHz; σ = 1.768 S/m; ε_r = 38.21; ρ = 1000 kg/m^3
Ambient Temperature：23.7 ℃; Liquid Temperature：22.7 ℃

DASY5 Configuration:
- Probe: ES3DV3 - SN3115; ConvF(4.55, 4.55, 4.55) @ 2450 MHz; Calibrated: 2021/11/23
- Sensor-Surface: 3mm (Mechanical Surface Detection)
- Electronics: DAE4 Sn1424; Calibrated: 2022/1/20
- Phantom: SAM_Left; Type: SAM; Serial: TP:1682
- Measurement SW: DASY52, Version 52.10 (4);SEMCAD X Version 14.6.14 (7501)

Pin=250mW/Area Scan (71x71x1): Interpolated grid: dx=1.200 mm, dy=1.200 mm
Maximum value of SAR (interpolated) = 16.5 W/kg

Pin=250mW/Zoom Scan (7x7x7)/Cube 0: Measurement grid: dx=5mm, dy=5mm, dz=5mm
Reference Value = 98.44 V/m; Power Drift = -0.01 dB
Peak SAR (extrapolated) = 24.3 W/kg
SAR(1 g) = 12 W/kg; SAR(10 g) = 5.59 W/kg
Maximum value of SAR (measured) = 15.8 W/kg

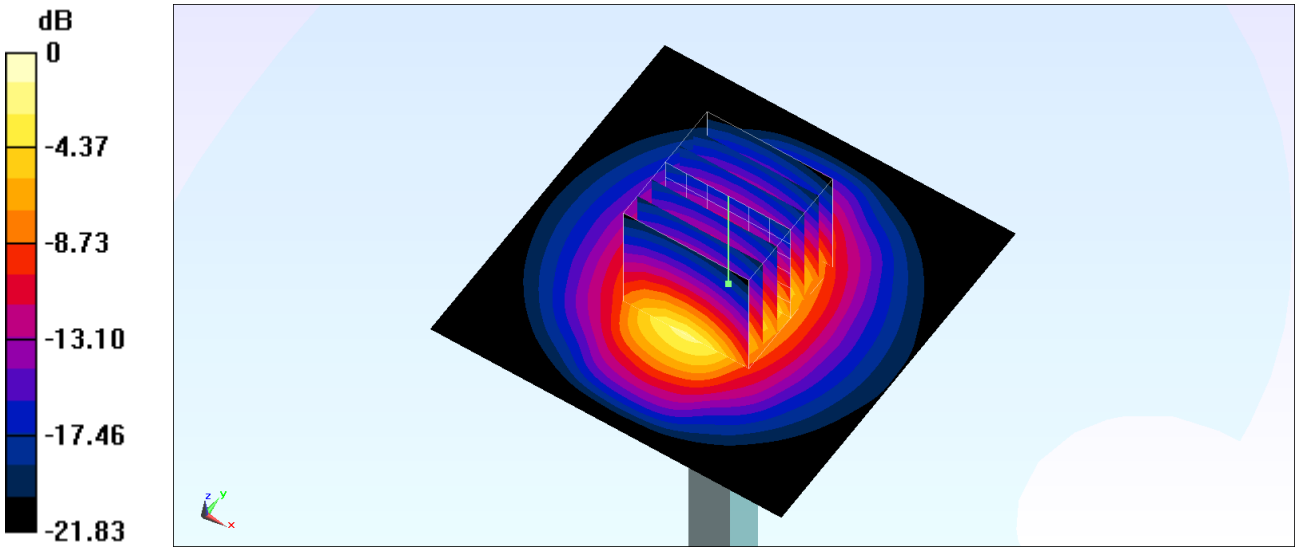

0 dB = 15.8 W/kg = 11.99 dBW/kg

System Check_Head_2450MHz

DUT: D2450V2-736

Communication System: CW; Frequency: 2450 MHz;Duty Cycle: 1:1
Medium: HSL_2450_220430 Medium parameters used : f = 2450 MHz; σ = 1.79 S/m; ε_r = 38.524; ρ = 1000 kg/m^3
Ambient Temperature：23.5 ℃; Liquid Temperature：22.5 ℃

DASY5 Configuration:
- Probe: ES3DV3 - SN3115; ConvF(4.55, 4.55, 4.55) @ 2450 MHz; Calibrated: 2021/11/23
- Sensor-Surface: 3mm (Mechanical Surface Detection)
- Electronics: DAE4 Sn1424; Calibrated: 2022/1/20
- Phantom: SAM_Left; Type: SAM; Serial: TP:1682
- Measurement SW: DASY52, Version 52.10 (4);SEMCAD X Version 14.6.14 (7501)

Pin=50mW/Area Scan (71x71x1): Interpolated grid: dx=1.200 mm, dy=1.200 mm
Maximum value of SAR (interpolated) = 3.59 W/kg

Pin=50mW/Zoom Scan (7x7x7)/Cube 0: Measurement grid: dx=5mm, dy=5mm, dz=5mm
Reference Value = 43.21 V/m; Power Drift = 0.18 dB
Peak SAR (extrapolated) = 5.22 W/kg
SAR(1 g) = 2.62 W/kg; SAR(10 g) = 1.25 W/kg
Maximum value of SAR (measured) = 3.46 W/kg

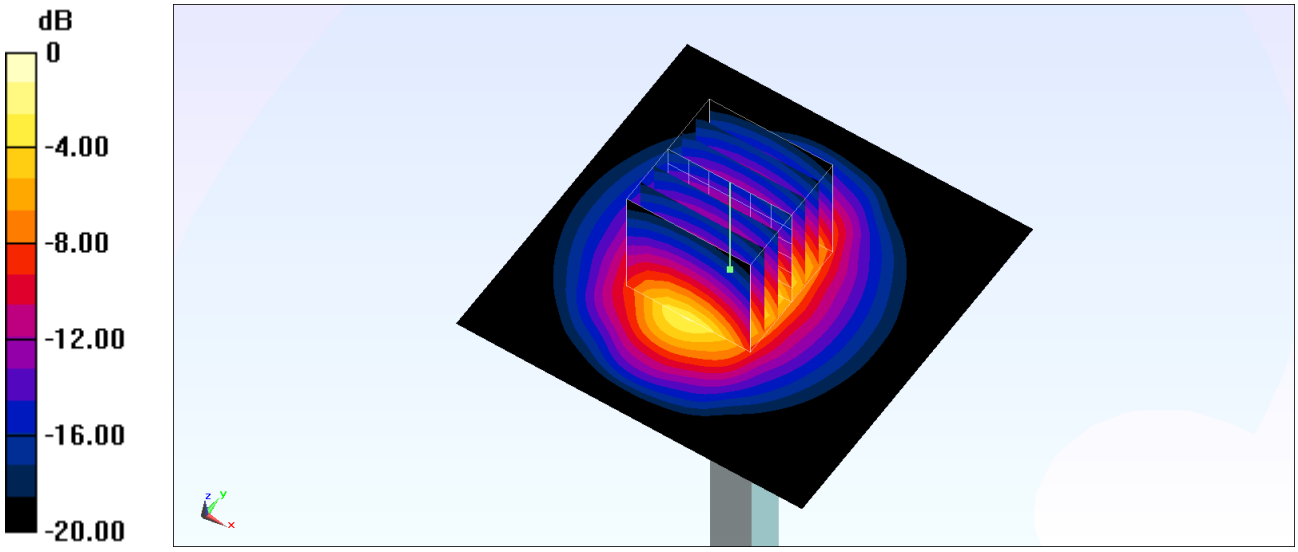

0 dB = 3.46 W/kg = 5.39 dBW/kg

System Check_Head_2450MHz

DUT: D2450V2-929

Communication System: CW; Frequency: 2450 MHz;Duty Cycle: 1:1
Medium: HSL_2450_220502 Medium parameters used: f = 2450 MHz; σ = 1.789 S/m; ε_r = 38.515; ρ = 1000 kg/m^3
Ambient Temperature：23.8 ℃; Liquid Temperature：22.8 ℃

DASY5 Configuration:
- Probe: EX3DV4 - SN7694; ConvF(8.07, 8.07, 8.07) @ 2450 MHz; Calibrated: 2022/1/24
- Sensor-Surface: 1.4mm (Mechanical Surface Detection)
- Electronics: DAE4 Sn1424; Calibrated: 2022/1/20
- Phantom: SAM_Left; Type: SAM; Serial: TP:1682
- Measurement SW: DASY52, Version 52.10 (4);SEMCAD X Version 14.6.14 (7501)

Pin=50mW/Area Scan (71x71x1): Interpolated grid: dx=1.200 mm, dy=1.200 mm
Maximum value of SAR (interpolated) = 3.93 W/kg

Pin=50mW/Zoom Scan (7x7x7)/Cube 0: Measurement grid: dx=5mm, dy=5mm, dz=5mm
Reference Value = 49.14 V/m; Power Drift = -0.11 dB
Peak SAR (extrapolated) = 4.88 W/kg
SAR(1 g) = 2.47 W/kg; SAR(10 g) = 1.16 W/kg
Maximum value of SAR (measured) = 3.96 W/kg

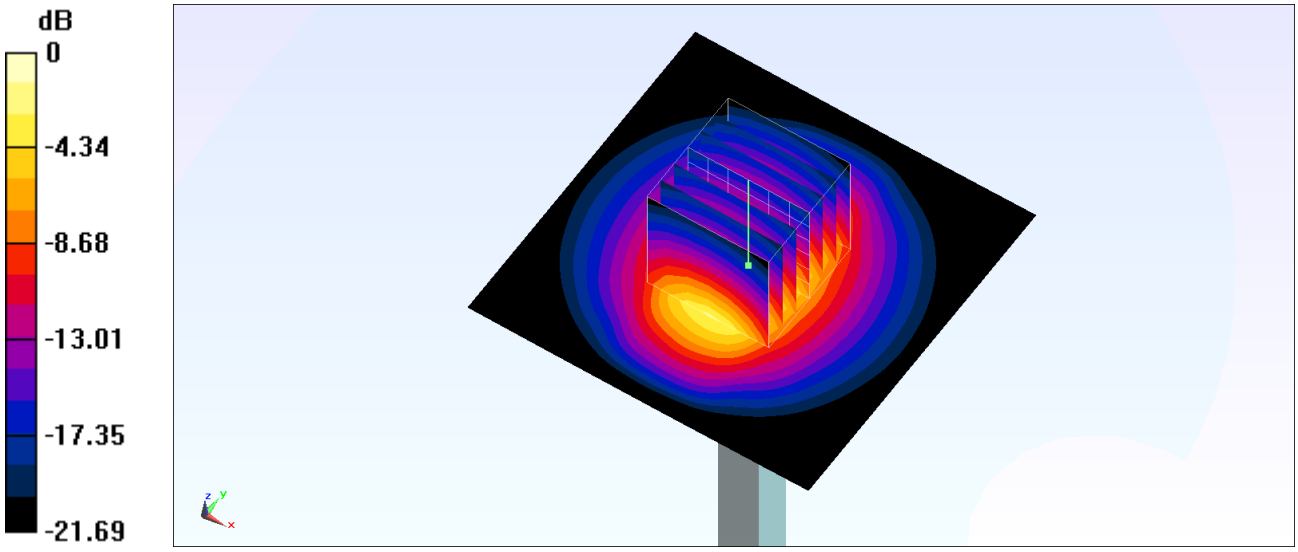

0 dB = 3.96 W/kg = 5.98 dBW/kg

System Check_Head_2450MHz

DUT: D2450V2-929

Communication System: CW; Frequency: 2450 MHz;Duty Cycle: 1:1
Medium: HSL_2450_220503 Medium parameters used : f = 2450 MHz; σ = 1.845 S/m; ε_r = 39.428; ρ = 1000 kg/m^3
Ambient Temperature：23.5 ℃; Liquid Temperature：22.5 ℃

DASY5 Configuration:
- Probe: EX3DV4 - SN3976; ConvF(7.85, 7.85, 7.85) @ 2450 MHz; Calibrated: 2022/1/27
- Sensor-Surface: 1.4mm (Mechanical Surface Detection)
- Electronics: DAE4 Sn316; Calibrated: 2022/1/26
- Phantom: SAM_Left; Type: SAM; Serial: 1796
- Measurement SW: DASY52, Version 52.10 (4);SEMCAD X Version 14.6.14 (7501)

Pin=50mW/Area Scan (71x71x1): Interpolated grid: dx=1.200 mm, dy=1.200 mm
Maximum value of SAR (interpolated) = 4.36 W/kg

Pin=50mW/Zoom Scan (7x7x7)/Cube 0: Measurement grid: dx=5mm, dy=5mm, dz=5mm
Reference Value = 50.05 V/m; Power Drift = -0.03 dB
Peak SAR (extrapolated) = 5.37 W/kg
SAR(1 g) = 2.68 W/kg; SAR(10 g) = 1.28 W/kg
Maximum value of SAR (measured) = 4.38 W/kg

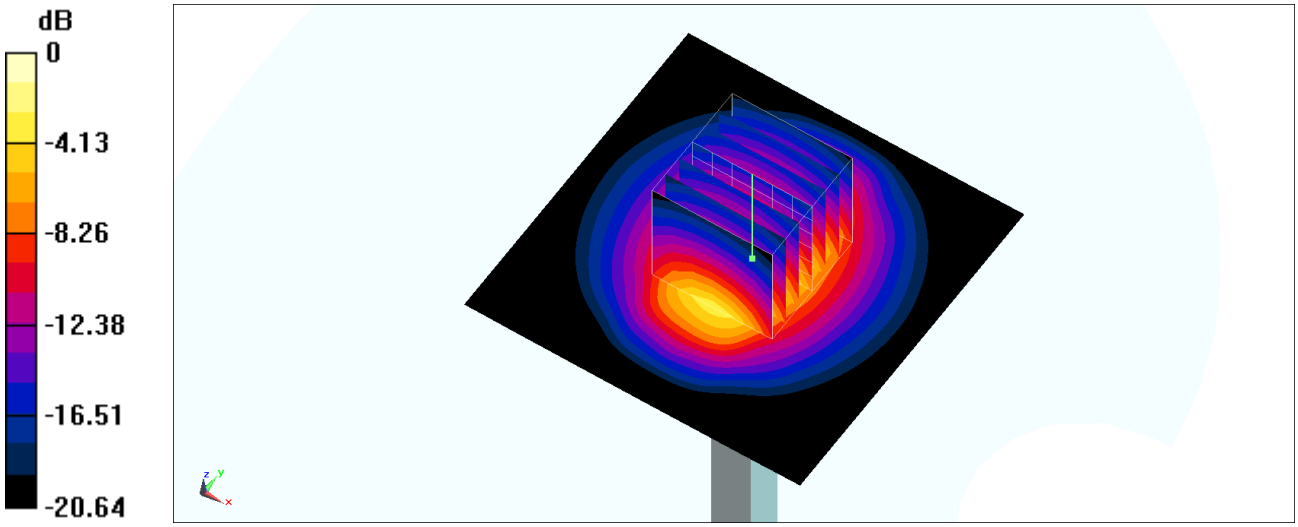

0 dB = 4.38 W/kg = 6.41 dBW/kg

System Check_Head_2450MHz

DUT: D2450V2-929

Communication System: CW; Frequency: 2450 MHz;Duty Cycle: 1:1
Medium: HSL_2450_220504 Medium parameters used : f = 2450 MHz; σ = 1.812 S/m; ε_r = 39.14; ρ = 1000 kg/m^3
Ambient Temperature：23.3 ℃; Liquid Temperature：22.3 ℃

DASY5 Configuration:
- Probe: EX3DV4 - SN3976; ConvF(7.85, 7.85, 7.85) @ 2450 MHz; Calibrated: 2022/1/27
- Sensor-Surface: 1.4mm (Mechanical Surface Detection)
- Electronics: DAE4 Sn316; Calibrated: 2022/1/26
- Phantom: SAM_Left; Type: SAM; Serial: 1796
- Measurement SW: DASY52, Version 52.10 (4);SEMCAD X Version 14.6.14 (7501)

Pin=50mW/Area Scan (71x71x1): Interpolated grid: dx=1.200 mm, dy=1.200 mm
Maximum value of SAR (interpolated) = 4.24 W/kg

Pin=50mW/Zoom Scan (7x7x7)/Cube 0: Measurement grid: dx=5mm, dy=5mm, dz=5mm
Reference Value = 49.69 V/m; Power Drift = 0.08 dB
Peak SAR (extrapolated) = 5.41 W/kg
SAR(1 g) = 2.57 W/kg; SAR(10 g) = 1.18 W/kg
Maximum value of SAR (measured) = 4.34 W/kg

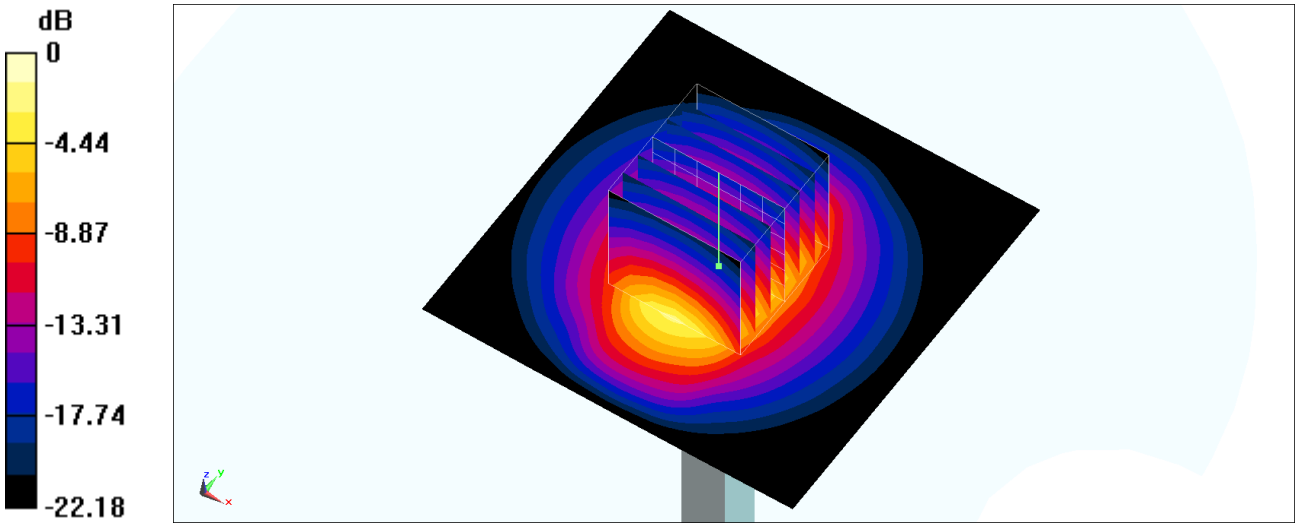

0 dB = 4.34 W/kg = 6.37 dBW/kg

System Check_Head_2450MHz

DUT: D2450V2-929

Communication System: CW; Frequency: 2450 MHz;Duty Cycle: 1:1
Medium: HSL_2450_220531 Medium parameters used: f = 2450 MHz; σ = 1.81 S/m; ε_r = 38.794; ρ = 1000 kg/m^3
Ambient Temperature：23.5 ℃; Liquid Temperature：22.5 ℃

DASY5 Configuration:
- Probe: EX3DV4 - SN7694; ConvF(8.07, 8.07, 8.07) @ 2450 MHz; Calibrated: 2022/1/24
- Sensor-Surface: 1.4mm (Mechanical Surface Detection)
- Electronics: DAE4 Sn1424; Calibrated: 2022/1/20
- Phantom: SAM-Middle; Type: SAM; Serial: TP-1503
- Measurement SW: DASY52, Version 52.10 (4);SEMCAD X Version 14.6.14 (7483)

Pin=50mW/Area Scan (71x71x1): Interpolated grid: dx=1.200 mm, dy=1.200 mm
Maximum value of SAR (interpolated) = 3.97 W/kg

Pin=50mW/Zoom Scan (7x7x7)/Cube 0: Measurement grid: dx=5mm, dy=5mm, dz=5mm
Reference Value = 49.14 V/m; Power Drift = -0.09 dB
Peak SAR (extrapolated) = 4.93 W/kg
SAR(1 g) = 2.45 W/kg; SAR(10 g) = 1.13 W/kg
Maximum value of SAR (measured) = 4.00 W/kg

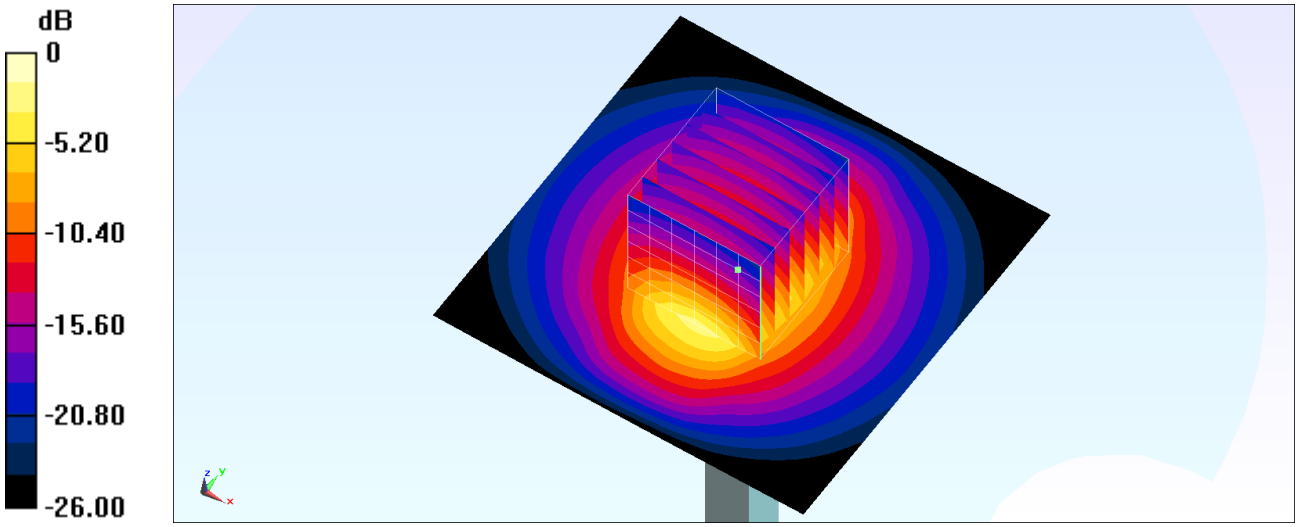

0 dB = 4.00 W/kg = 6.02 dBW/kg

System Check_Head_2600MHz

DUT: D2600V2-1008

Communication System: CW; Frequency: 2600 MHz;Duty Cycle: 1:1
Medium: HSL_2600_220414 Medium parameters used: f = 2600 MHz; σ = 1.918 S/m; ε_r = 38.808; ρ = 1000 kg/m^3
Ambient Temperature：23.8 ℃; Liquid Temperature：22.8 ℃

DASY5 Configuration:
- Probe: EX3DV4 - SN3931; ConvF(7.3, 7.3, 7.3) @ 2600 MHz; Calibrated: 2021/10/21
- Sensor-Surface: 1.4mm (Mechanical Surface Detection)
- Electronics: DAE4 Sn1399; Calibrated: 2022/2/28
- Phantom: SAM-Middle; Type: SAM; Serial: TP-1503
- Measurement SW: DASY52, Version 52.10 (4);SEMCAD X Version 14.6.14 (7483)

Pin=50mW/Area Scan (71x71x1): Interpolated grid: dx=1.200 mm, dy=1.200 mm
Maximum value of SAR (interpolated) = 4.70 W/kg

Pin=50mW/Zoom Scan (7x7x7)/Cube 0: Measurement grid: dx=5mm, dy=5mm, dz=5mm
Reference Value = 51.52 V/m; Power Drift = -0.02 dB
Peak SAR (extrapolated) = 5.71 W/kg
SAR(1 g) = 2.77 W/kg; SAR(10 g) = 1.25 W/kg
Maximum value of SAR (measured) = 4.66 W/kg

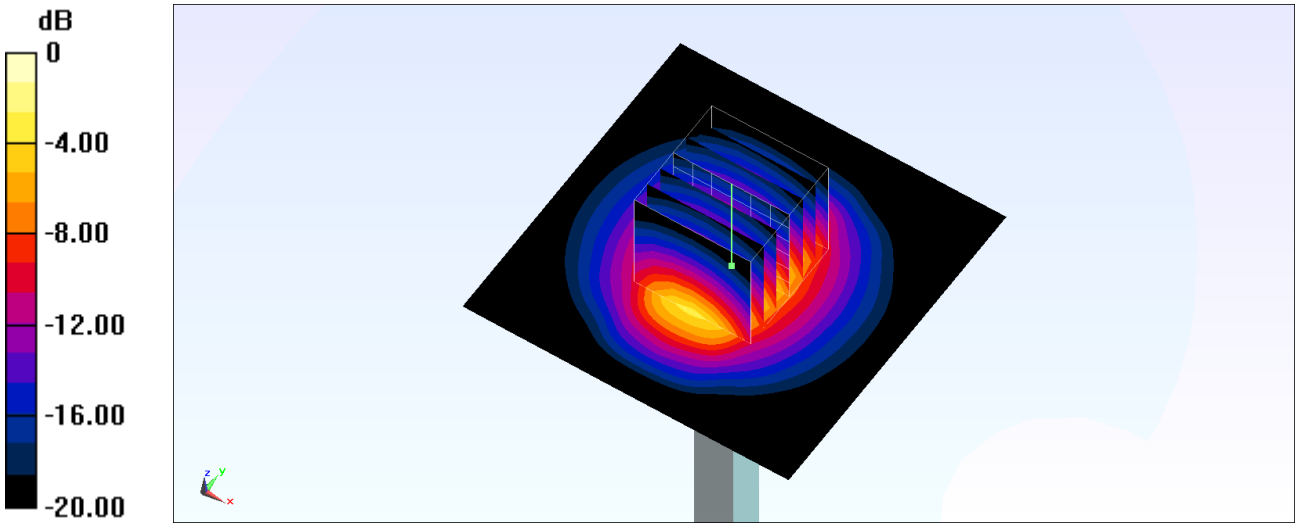

0 dB = 4.66 W/kg = 6.68 dBW/kg

System Check_Head_2600MHz

DUT: D2600V2-1008

Communication System: CW; Frequency: 2600 MHz;Duty Cycle: 1:1
Medium: HSL_2600_220418 Medium parameters used: f = 2600 MHz; σ = 1.92 S/m; ε_r = 38.822; ρ = 1000 kg/m^3
Ambient Temperature：23.2 ℃; Liquid Temperature：22.2 ℃

DASY5 Configuration:
- Probe: EX3DV4 - SN3931; ConvF(7.3, 7.3, 7.3) @ 2600 MHz; Calibrated: 2021/10/21
- Sensor-Surface: 1.4mm (Mechanical Surface Detection)
- Electronics: DAE4 Sn1399; Calibrated: 2022/2/28
- Phantom: SAM-Middle; Type: SAM; Serial: TP-1503
- Measurement SW: DASY52, Version 52.10 (4);SEMCAD X Version 14.6.14 (7483)

Pin=50mW/Area Scan (71x71x1): Interpolated grid: dx=1.200 mm, dy=1.200 mm
Maximum value of SAR (interpolated) = 4.71 W/kg

Pin=50mW/Zoom Scan (7x7x7)/Cube 0: Measurement grid: dx=5mm, dy=5mm, dz=5mm
Reference Value = 51.52 V/m; Power Drift = -0.02 dB
Peak SAR (extrapolated) = 5.71 W/kg
SAR(1 g) = 2.77 W/kg; SAR(10 g) = 1.25 W/kg
Maximum value of SAR (measured) = 4.66 W/kg

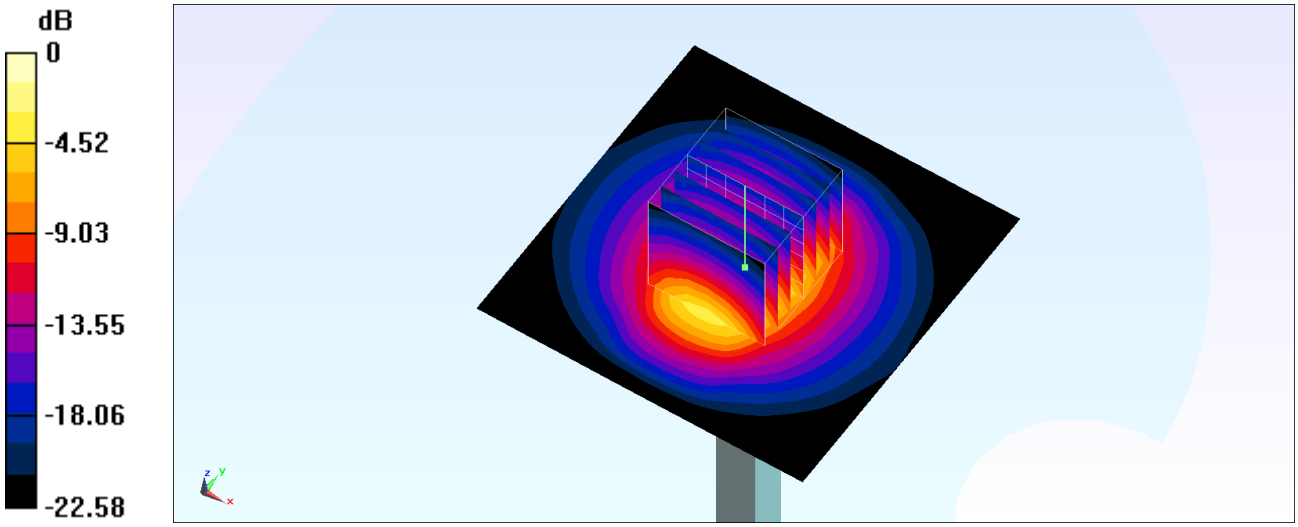

0 dB = 4.66 W/kg = 6.68 dBW/kg

System Check_Head_2600MHz

DUT: D2600V2-1008

Communication System: CW; Frequency: 2600 MHz;Duty Cycle: 1:1
Medium: HSL_2600_220424 Medium parameters used: f = 2600 MHz; σ = 1.941 S/m; ε_r = 38.112; ρ = 1000 kg/m^3
Ambient Temperature：23.4 ℃; Liquid Temperature：22.4 ℃

DASY5 Configuration:
- Probe: EX3DV4 - SN3931; ConvF(7.3, 7.3, 7.3) @ 2600 MHz; Calibrated: 2021/10/21
- Sensor-Surface: 1.4mm (Mechanical Surface Detection)
- Electronics: DAE4 Sn1399; Calibrated: 2022/2/28
- Phantom: SAM-Middle; Type: SAM; Serial: TP-1503
- Measurement SW: DASY52, Version 52.10 (4);SEMCAD X Version 14.6.14 (7483)

Pin=250mW/Area Scan (71x71x1): Interpolated grid: dx=1.200 mm, dy=1.200 mm
Maximum value of SAR (interpolated) = 24.4 W/kg

Pin=250mW/Zoom Scan (7x7x7)/Cube 0: Measurement grid: dx=5mm, dy=5mm, dz=5mm
Reference Value = 116.1 V/m; Power Drift = -0.12 dB
Peak SAR (extrapolated) = 30.4 W/kg
SAR(1 g) = 14.6 W/kg; SAR(10 g) = 6.63 W/kg
Maximum value of SAR (measured) = 24.6 W/kg

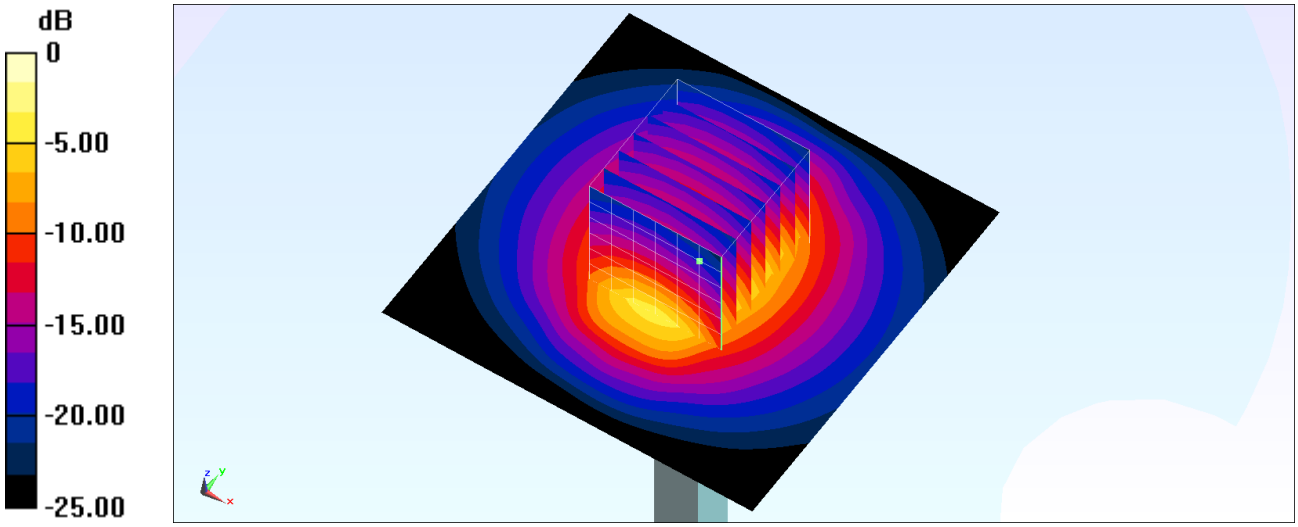

0 dB = 24.6 W/kg = 13.91 dBW/kg

System Check_Head_2600MHz

DUT: D2600V2-1008

Communication System: CW; Frequency: 2600 MHz;Duty Cycle: 1:1
Medium: HSL_2600_220426 Medium parameters used: f = 2600 MHz; σ = 1.957 S/m; ε_r = 38.474; ρ = 1000 kg/m^3
Ambient Temperature：23.7 ℃; Liquid Temperature：22.7 ℃

DASY5 Configuration:
- Probe: EX3DV4 - SN3931; ConvF(7.3, 7.3, 7.3) @ 2600 MHz; Calibrated: 2021/10/21
- Sensor-Surface: 1.4mm (Mechanical Surface Detection)
- Electronics: DAE4 Sn1399; Calibrated: 2022/2/28
- Phantom: SAM-Middle; Type: SAM; Serial: TP-1503
- Measurement SW: DASY52, Version 52.10 (4);SEMCAD X Version 14.6.14 (7483)

Pin=50mW/Area Scan (71x71x1): Interpolated grid: dx=1.200 mm, dy=1.200 mm
Maximum value of SAR (interpolated) = 4.86 W/kg

Pin=50mW/Zoom Scan (7x7x7)/Cube 0: Measurement grid: dx=5mm, dy=5mm, dz=5mm
Reference Value = 51.73 V/m; Power Drift = -0.12 dB
Peak SAR (extrapolated) = 5.91 W/kg
SAR(1 g) = 2.84 W/kg; SAR(10 g) = 1.3 W/kg
Maximum value of SAR (measured) = 4.79 W/kg

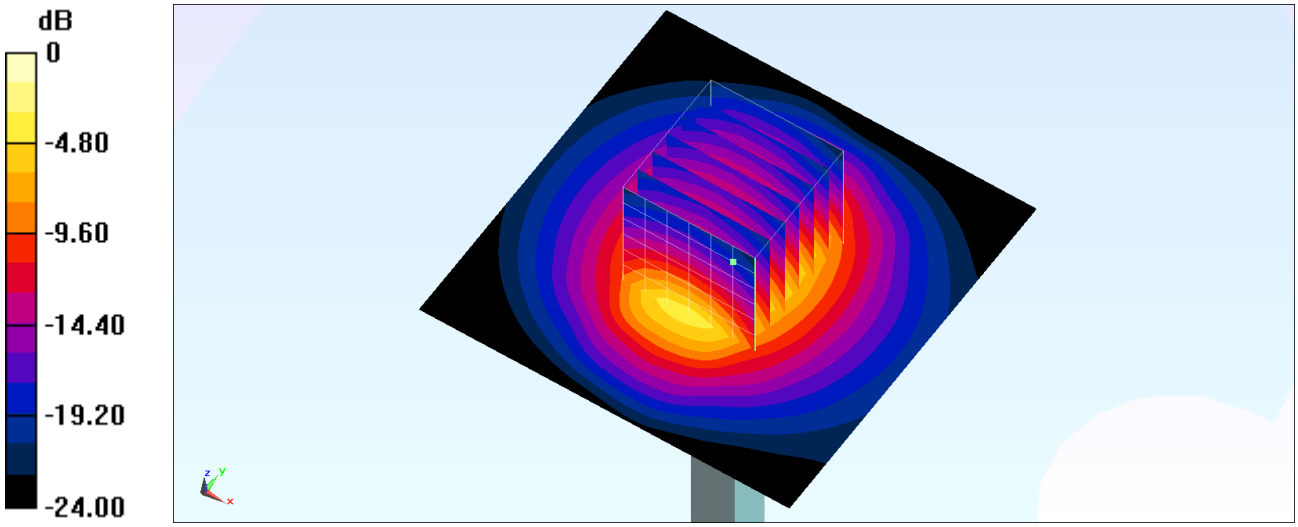

0 dB = 4.79 W/kg = 6.80 dBW/kg

System Check_Head_2600MHz

DUT: D2600V2-1008

Communication System: CW; Frequency: 2600 MHz;Duty Cycle: 1:1
Medium: HSL_2600_220427 Medium parameters used: f = 2600 MHz; σ = 1.963 S/m; ε_r = 38.891; ρ = 1000 kg/m^3
Ambient Temperature：23.2 ℃; Liquid Temperature：22.2 ℃

DASY5 Configuration:
- Probe: EX3DV4 - SN3931; ConvF(7.3, 7.3, 7.3) @ 2600 MHz; Calibrated: 2021/10/21
- Sensor-Surface: 1.4mm (Mechanical Surface Detection)
- Electronics: DAE4 Sn1399; Calibrated: 2022/2/28
- Phantom: SAM-Middle; Type: SAM; Serial: TP-1503
- Measurement SW: DASY52, Version 52.10 (4);SEMCAD X Version 14.6.14 (7483)

Pin=50mW/Area Scan (71x71x1): Interpolated grid: dx=1.200 mm, dy=1.200 mm
Maximum value of SAR (interpolated) = 4.99 W/kg

Pin=50mW/Zoom Scan (7x7x7)/Cube 0: Measurement grid: dx=5mm, dy=5mm, dz=5mm
Reference Value = 50.57 V/m; Power Drift = -0.13 dB
Peak SAR (extrapolated) = 6.07 W/kg
SAR(1 g) = 2.96 W/kg; SAR(10 g) = 1.37 W/kg
Maximum value of SAR (measured) = 4.95 W/kg

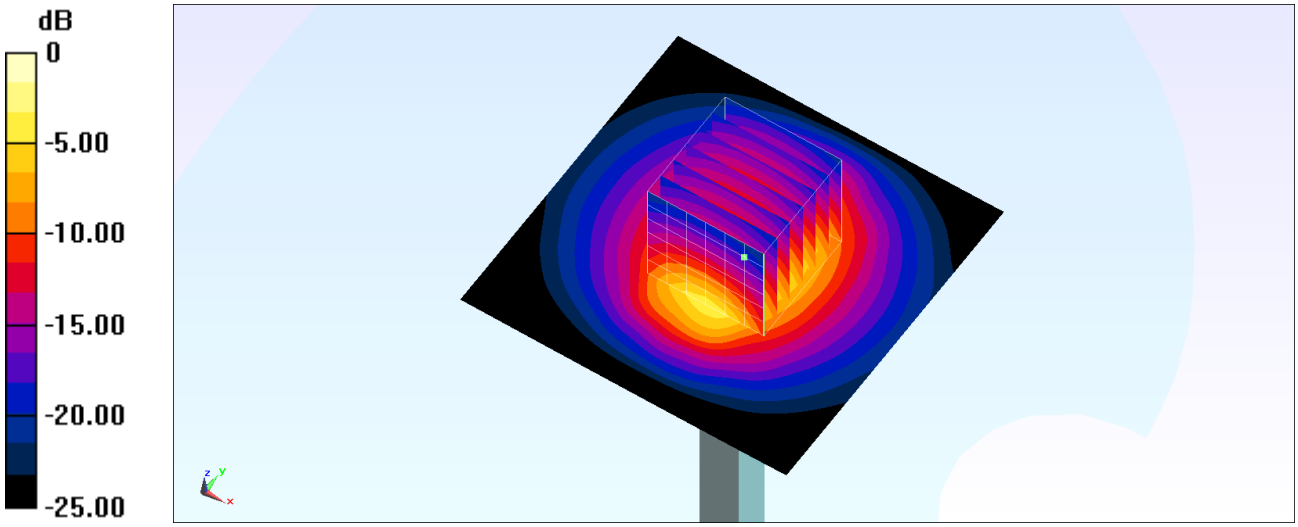

0 dB = 4.95 W/kg = 6.95 dBW/kg

System Check_Head_2600MHz

DUT: D2600V2-1008

Communication System: CW; Frequency: 2600 MHz;Duty Cycle: 1:1
Medium: HSL_2600_220428 Medium parameters used: f = 2600 MHz; σ = 2.042 S/m; ε_r = 38.561; ρ = 1000 kg/m^3
Ambient Temperature：23.2 ℃; Liquid Temperature：22.2 ℃

DASY5 Configuration:
- Probe: EX3DV4 - SN3931; ConvF(7.3, 7.3, 7.3) @ 2600 MHz; Calibrated: 2021/10/21
- Sensor-Surface: 1.4mm (Mechanical Surface Detection)
- Electronics: DAE4 Sn1399; Calibrated: 2022/2/28
- Phantom: SAM-Middle; Type: SAM; Serial: TP-1503
- Measurement SW: DASY52, Version 52.10 (4);SEMCAD X Version 14.6.14 (7483)

Pin=250mW/Area Scan (71x71x1): Interpolated grid: dx=1.200 mm, dy=1.200 mm
Maximum value of SAR (interpolated) = 27.5 W/kg

Pin=250mW/Zoom Scan (7x7x7)/Cube 0: Measurement grid: dx=5mm, dy=5mm, dz=5mm
Reference Value = 117.4 V/m; Power Drift = -0.19 dB
Peak SAR (extrapolated) = 33.7 W/kg
SAR(1 g) = 15.4 W/kg; SAR(10 g) = 6.72 W/kg
Maximum value of SAR (measured) = 26.7 W/kg

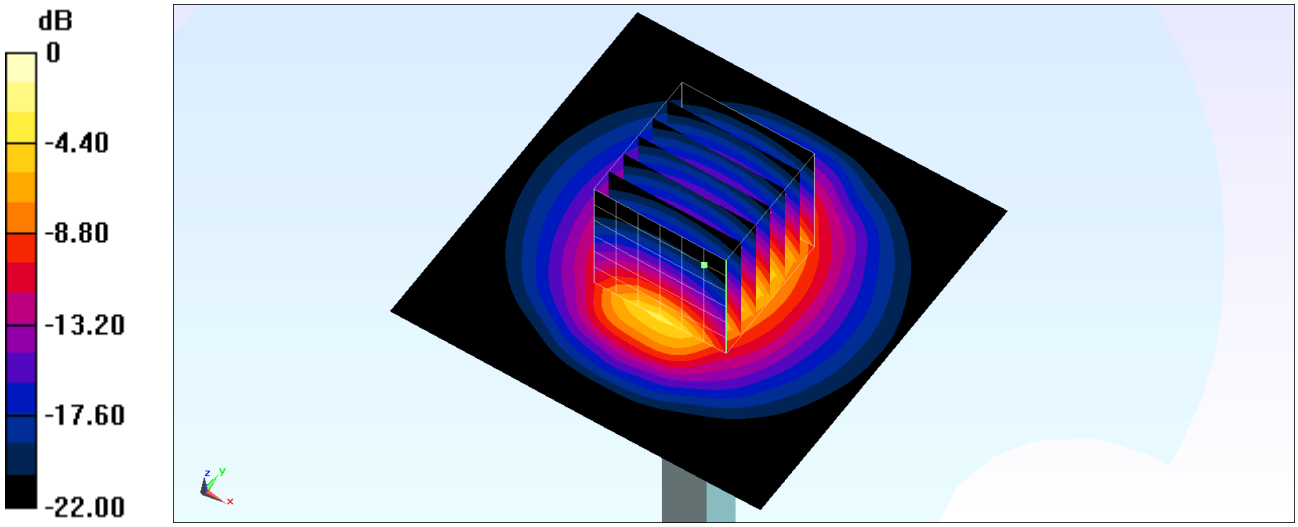

0 dB = 26.7 W/kg = 14.27 dBW/kg

System Check_Head_2600MHz

DUT: D2600V2-1008

Communication System: CW; Frequency: 2600 MHz;Duty Cycle: 1:1
Medium: HSL_2600_220429 Medium parameters used: f = 2600 MHz; σ = 1.948 S/m; ε_r = 38.595; ρ = 1000 kg/m^3
Ambient Temperature：23.4 ℃; Liquid Temperature：22.4 ℃

DASY5 Configuration:
- Probe: EX3DV4 - SN3931; ConvF(7.3, 7.3, 7.3) @ 2600 MHz; Calibrated: 2021/10/21
- Sensor-Surface: 1.4mm (Mechanical Surface Detection)
- Electronics: DAE4 Sn1399; Calibrated: 2022/2/28
- Phantom: SAM-Middle; Type: SAM; Serial: TP-1503
- Measurement SW: DASY52, Version 52.10 (4);SEMCAD X Version 14.6.14 (7483)

Pin=250mW/Area Scan (61x61x1): Interpolated grid: dx=1.200 mm, dy=1.200 mm
Maximum value of SAR (interpolated) = 25.6 W/kg

Pin=250mW/Zoom Scan (7x7x7)/Cube 0: Measurement grid: dx=5mm, dy=5mm, dz=5mm
Reference Value = 124.9 V/m; Power Drift = -0.13 dB
Peak SAR (extrapolated) = 31.1 W/kg
SAR(1 g) = 14.2 W/kg; SAR(10 g) = 6.38 W/kg
Maximum value of SAR (measured) = 24.5 W/kg

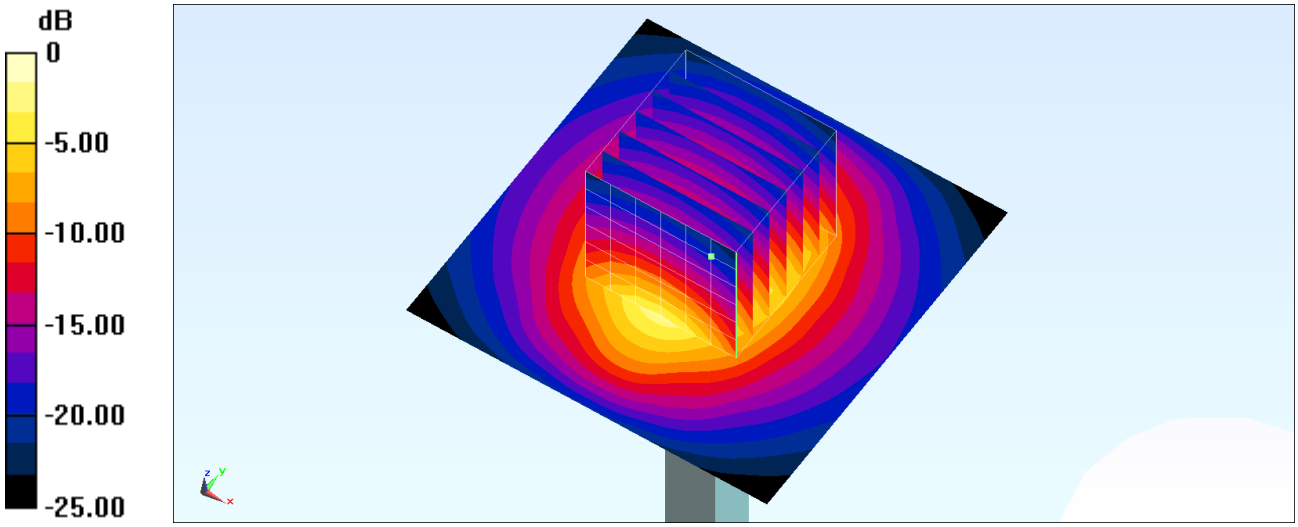

0 dB = 24.5 W/kg = 13.89 dBW/kg

System Check_Head_2600MHz

DUT: D2600V2-1008

Communication System: CW; Frequency: 2600 MHz;Duty Cycle: 1:1
Medium: HSL_2600_220430 Medium parameters used: f = 2600 MHz; σ = 1.935 S/m; ε_r = 38.974; ρ = 1000 kg/m^3
Ambient Temperature：23.2 ℃; Liquid Temperature：22.2 ℃

DASY5 Configuration:
- Probe: EX3DV4 - SN3931; ConvF(7.3, 7.3, 7.3) @ 2600 MHz; Calibrated: 2021/10/21
- Sensor-Surface: 1.4mm (Mechanical Surface Detection)
- Electronics: DAE4 Sn1399; Calibrated: 2022/2/28
- Phantom: SAM-Middle; Type: SAM; Serial: TP-1503
- Measurement SW: DASY52, Version 52.10 (4);SEMCAD X Version 14.6.14 (7483)

Pin=250mW/Area Scan (61x61x1): Interpolated grid: dx=1.200 mm, dy=1.200 mm
Maximum value of SAR (interpolated) = 25.3 W/kg

Pin=250mW/Zoom Scan (7x7x7)/Cube 0: Measurement grid: dx=5mm, dy=5mm, dz=5mm
Reference Value = 118.1 V/m; Power Drift = -0.04 dB
Peak SAR (extrapolated) = 31.6 W/kg
SAR(1 g) = 14.3 W/kg; SAR(10 g) = 6.31 W/kg
Maximum value of SAR (measured) = 25.0 W/kg

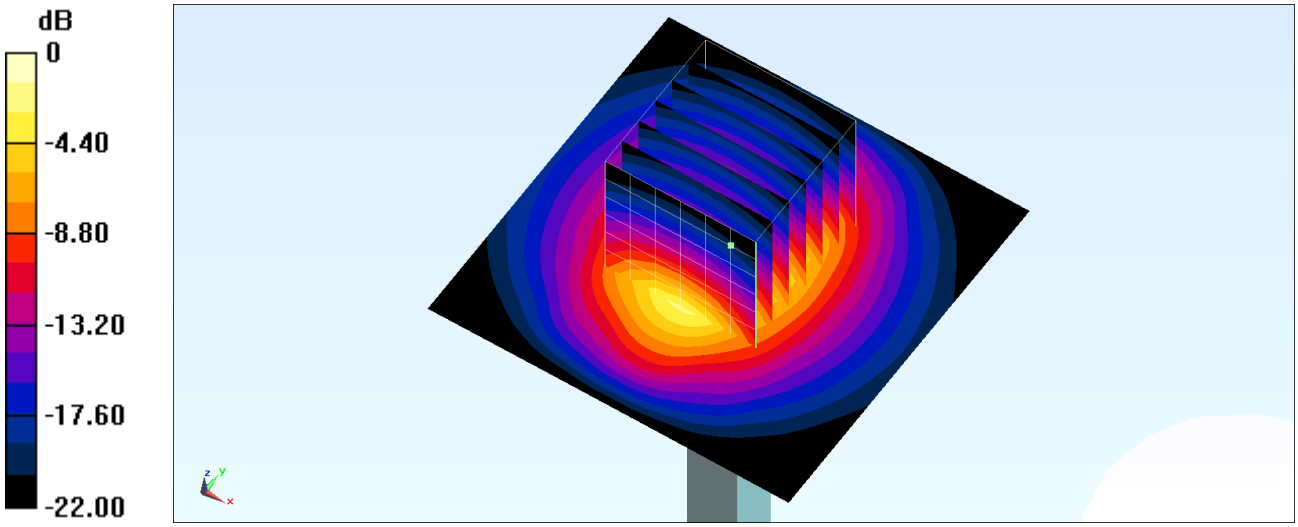

0 dB = 25.0 W/kg = 13.98 dBW/kg

System Check_Head_2600MHz

DUT: D2600V2-1008

Communication System: CW; Frequency: 2600 MHz;Duty Cycle: 1:1
Medium: HSL_2600_220508 Medium parameters used: f = 2600 MHz; σ = 1.978 S/m; ε_r = 39.041; ρ = 1000 kg/m^3
Ambient Temperature：23.1 ℃; Liquid Temperature：22.1 ℃

DASY5 Configuration:
- Probe: EX3DV4 - SN7694; ConvF(7.95, 7.95, 7.95) @ 2600 MHz; Calibrated: 2022/1/24
- Sensor-Surface: 1.4mm (Mechanical Surface Detection)
- Electronics: DAE4 Sn1424; Calibrated: 2022/1/20
- Phantom: SAM-Middle; Type: SAM; Serial: TP-1503
- Measurement SW: DASY52, Version 52.10 (4);SEMCAD X Version 14.6.14 (7483)

Pin=250mW/Area Scan (81x81x1): Interpolated grid: dx=1.200 mm, dy=1.200 mm
Maximum value of SAR (interpolated) = 22.9 W/kg

Pin=250mW/Zoom Scan (7x7x7)/Cube 0: Measurement grid: dx=5mm, dy=5mm, dz=5mm
Reference Value = 106.4 V/m; Power Drift = 0.07 dB
Peak SAR (extrapolated) = 29.8 W/kg
SAR(1 g) = 13.8 W/kg; SAR(10 g) = 6.27 W/kg
Maximum value of SAR (measured) = 23.8 W/kg

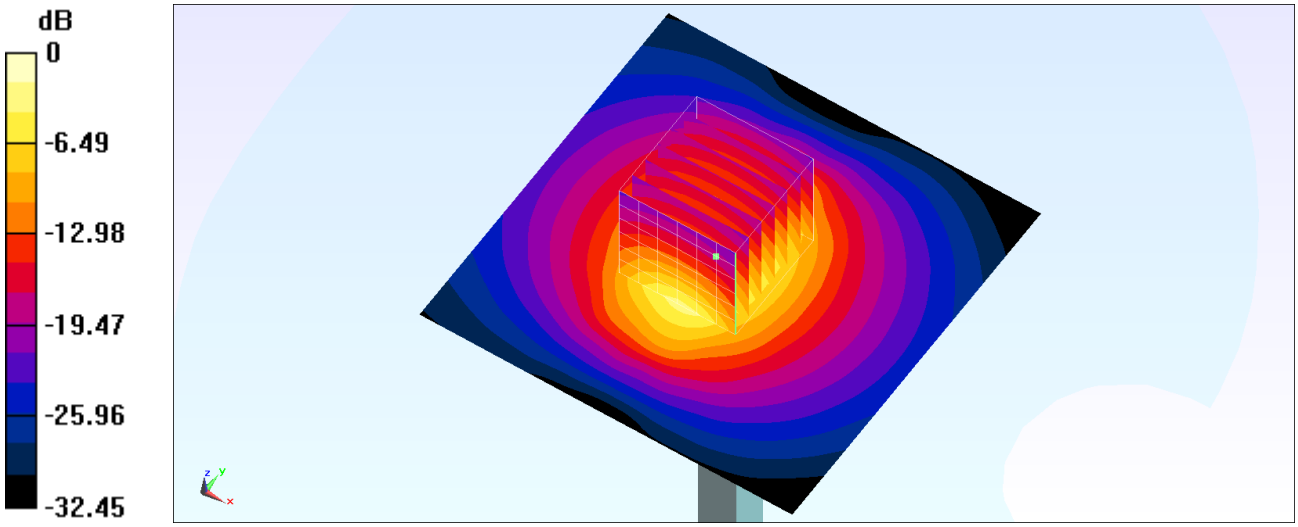

0 dB = 23.8 W/kg = 13.77 dBW/kg

System Check_Head_2600MHz

DUT: D2600V2-1008

Communication System: CW; Frequency: 2600 MHz;Duty Cycle: 1:1
Medium: HSL_2600_220511 Medium parameters used: f = 2600 MHz; σ = 2.011 S/m; ε_r = 38.786; ρ = 1000 kg/m^3
Ambient Temperature：23.6 ℃; Liquid Temperature：22.6 ℃

DASY5 Configuration:
- Probe: ES3DV3 - SN3270; ConvF(4.51, 4.51, 4.51) @ 2600 MHz; Calibrated: 2021/9/21
- Sensor-Surface: 3mm (Mechanical Surface Detection)
- Electronics: DAE4 Sn1512; Calibrated: 2022/3/29
- Phantom: SAM_Left; Type: SAM; Serial: 1796
- Measurement SW: DASY52, Version 52.10 (4);SEMCAD X Version 14.6.14 (7501)

Pin=250mW/Area Scan (81x81x1): Interpolated grid: dx=1.200 mm, dy=1.200 mm
Maximum value of SAR (interpolated) = 25.9 W/kg
Pin=250mW/Zoom Scan (7x7x7)/Cube 0: Measurement grid: dx=5mm, dy=5mm, dz=5mm
Reference Value = 118.0 V/m; Power Drift = -0.01 dB
Peak SAR (extrapolated) = 33.7 W/kg
SAR(1 g) = 15.6 W/kg; SAR(10 g) = 7 W/kg
Maximum value of SAR (measured) = 24.4 W/kg

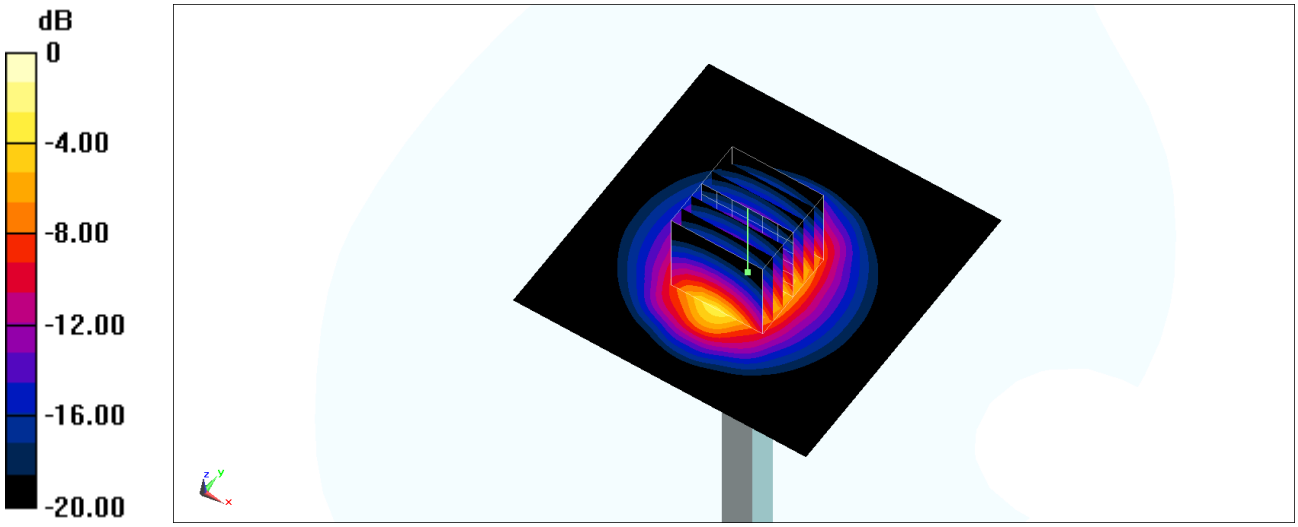

0 dB = 24.4 W/kg = 13.87 dBW/kg

System Check_Head_2600MHz

DUT: D2600V2-1008

Communication System: CW; Frequency: 2600 MHz;Duty Cycle: 1:1
Medium: HSL_2600_220512 Medium parameters used: f = 2600 MHz; σ = 1.95 S/m; ε_r = 38.62; ρ = 1000 kg/m^3
Ambient Temperature：23.6 ℃; Liquid Temperature：22.6 ℃

DASY5 Configuration:
- Probe: EX3DV4 - SN7625; ConvF(7.56, 7.56, 7.56) @ 2600 MHz; Calibrated: 2022/1/27
- Sensor-Surface: 1.4mm (Mechanical Surface Detection)
- Electronics: DAE4 Sn1696; Calibrated: 2021/11/3
- Phantom: SAM_Left; Type: SAM; Serial: TP:1682
- Measurement SW: DASY52, Version 52.10 (4);SEMCAD X Version 14.6.14 (7501)

Pin=250mW/Area Scan (81x81x1): Interpolated grid: dx=1.200 mm, dy=1.200 mm
Maximum value of SAR (interpolated) = 24.0 W/kg

Pin=250mW/Zoom Scan (7x7x7)/Cube 0: Measurement grid: dx=5mm, dy=5mm, dz=5mm
Reference Value = 110.4 V/m; Power Drift = 0.18 dB
Peak SAR (extrapolated) = 31.1 W/kg
SAR(1 g) = 14.6 W/kg; SAR(10 g) = 6.61 W/kg
Maximum value of SAR (measured) = 24.9 W/kg

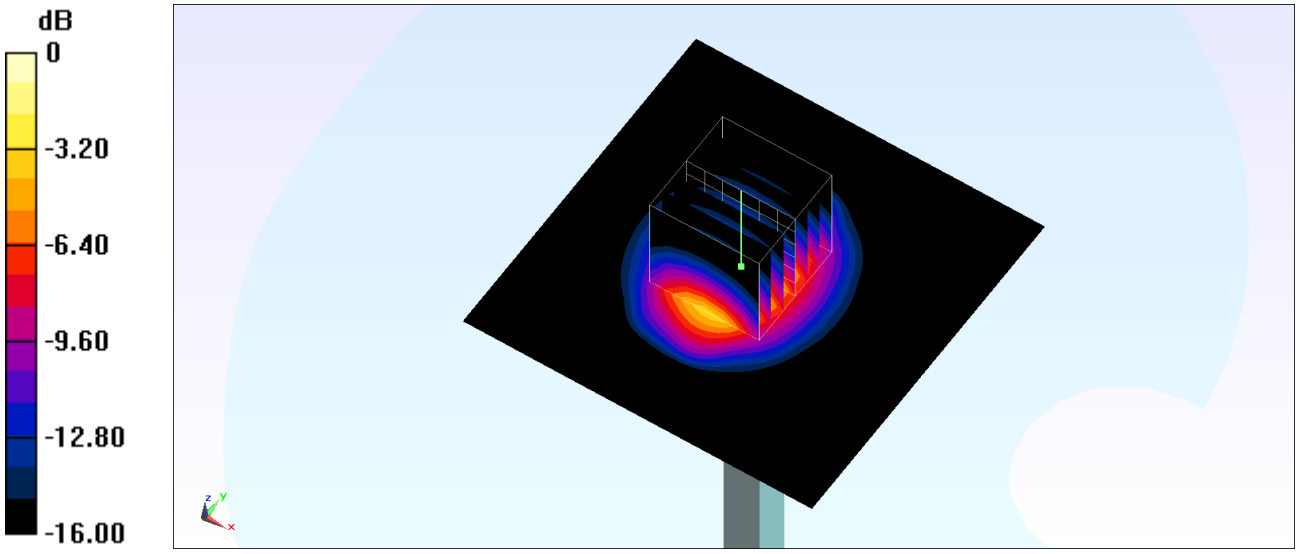

0 dB = 24.9 W/kg = 13.96 dBW/kg

System Check_Head_2600MHz

DUT: D2600V2-1008

Communication System: CW; Frequency: 2600 MHz;Duty Cycle: 1:1
Medium: HSL_2600_220512 Medium parameters used: f = 2600 MHz; σ = 1.956 S/m; ε_r = 39.069; ρ = 1000 kg/m^3
Ambient Temperature：23.6 ℃; Liquid Temperature：22.6 ℃

DASY5 Configuration:
- Probe: EX3DV4 - SN3931; ConvF(7.3, 7.3, 7.3) @ 2600 MHz; Calibrated: 2021/10/21
- Sensor-Surface: 1.4mm (Mechanical Surface Detection)
- Electronics: DAE4 Sn1399; Calibrated: 2022/2/28
- Phantom: SAM_Left; Type: SAM; Serial: 1796
- Measurement SW: DASY52, Version 52.10 (4);SEMCAD X Version 14.6.14 (7501)

Pin=50mW/Area Scan (71x71x1): Interpolated grid: dx=1.200 mm, dy=1.200 mm
Maximum value of SAR (interpolated) = 4.79 W/kg

Pin=50mW/Zoom Scan (7x7x7)/Cube 0: Measurement grid: dx=5mm, dy=5mm, dz=5mm
Reference Value = 51.52 V/m; Power Drift = -0.02 dB
Peak SAR (extrapolated) = 5.82 W/kg
SAR(1 g) = 2.82 W/kg; SAR(10 g) = 1.28 W/kg
Maximum value of SAR (measured) = 4.75 W/kg

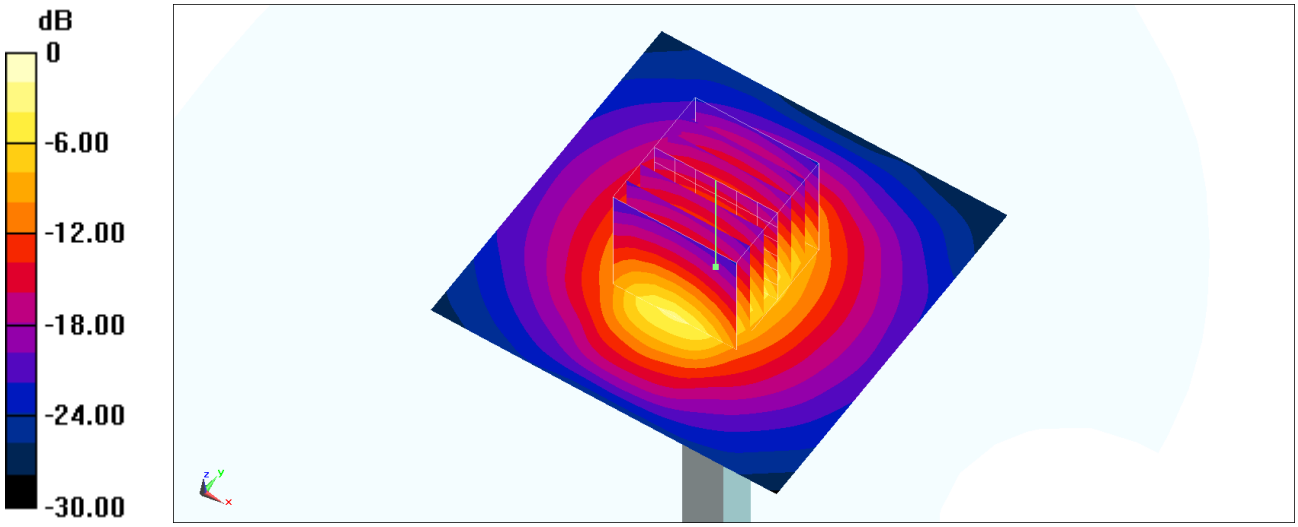

0 dB = 4.75 W/kg = 6.77 dBW/kg

System Check_Head_2600MHz

DUT: D2600V2-1008

Communication System: CW; Frequency: 2600 MHz;Duty Cycle: 1:1
Medium: HSL_2600_220515 Medium parameters used: f = 2600 MHz; σ = 1.944 S/m; ε_r = 39.051; ρ = 1000 kg/m^3
Ambient Temperature：23.3 ℃; Liquid Temperature：22.3 ℃

DASY5 Configuration:
- Probe: EX3DV4 - SN7694; ConvF(7.95, 7.95, 7.95) @ 2600 MHz; Calibrated: 2022/1/24
- Sensor-Surface: 1.4mm (Mechanical Surface Detection)
- Electronics: DAE4 Sn1424; Calibrated: 2022/1/20
- Phantom: SAM-Middle; Type: SAM; Serial: TP-1503
- Measurement SW: DASY52, Version 52.10 (4);SEMCAD X Version 14.6.14 (7483)

Pin=250mW/Area Scan (81x81x1): Interpolated grid: dx=1.200 mm, dy=1.200 mm
Maximum value of SAR (interpolated) = 22.5 W/kg

Pin=250mW/Zoom Scan (7x7x7)/Cube 0: Measurement grid: dx=5mm, dy=5mm, dz=5mm
Reference Value = 106.4 V/m; Power Drift = 0.18 dB
Peak SAR (extrapolated) = 29.3 W/kg
SAR(1 g) = 13.6 W/kg; SAR(10 g) = 6.16 W/kg
Maximum value of SAR (measured) = 23.4 W/kg

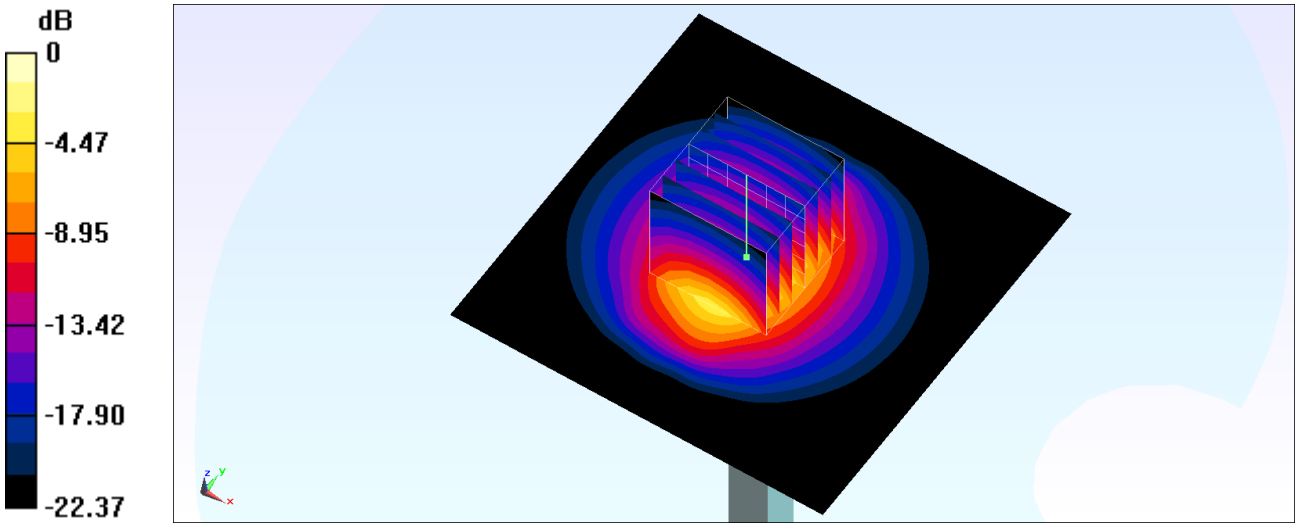

0 dB = 23.4 W/kg = 13.69 dBW/kg

System Check_Head_3500MHz

DUT: D3500V2 - SN1014

Communication System: CW; Frequency: 3500 MHz;Duty Cycle: 1:1
Medium: HSL_3500_220415 Medium parameters used: f = 3500 MHz; σ = 2.846 S/m; ε_r = 37.56; ρ = 1000 kg/m^3
Ambient Temperature：23.6 ℃; Liquid Temperature：22.6 ℃

DASY5 Configuration:
- Probe: EX3DV4 - SN7625; ConvF(7, 7, 7) @ 3500 MHz; Calibrated: 2022/1/27
- Sensor-Surface: 1.4mm (Mechanical Surface Detection)
- Electronics: DAE4 Sn1696; Calibrated: 2021/11/3
- Phantom: SAM_Right; Type: QD000P40CD; Serial: TP:1681
- Measurement SW: DASY52, Version 52.10 (4);SEMCAD X Version 14.6.14 (7501)

Pin=100mW/Area Scan (71x71x1): Interpolated grid: dx=1.200 mm, dy=1.200 mm
Maximum value of SAR (interpolated) = 12.8 W/kg

Pin=100mW/Zoom Scan (7x7x8)/Cube 0: Measurement grid: dx=5mm, dy=5mm, dz=1.4mm
Reference Value = 58.86 V/m; Power Drift = 0.03 dB
Peak SAR (extrapolated) = 17.5 W/kg
SAR(1 g) = 6.2 W/kg; SAR(10 g) = 2.3 W/kg
Maximum value of SAR (measured) = 12.5 W/kg

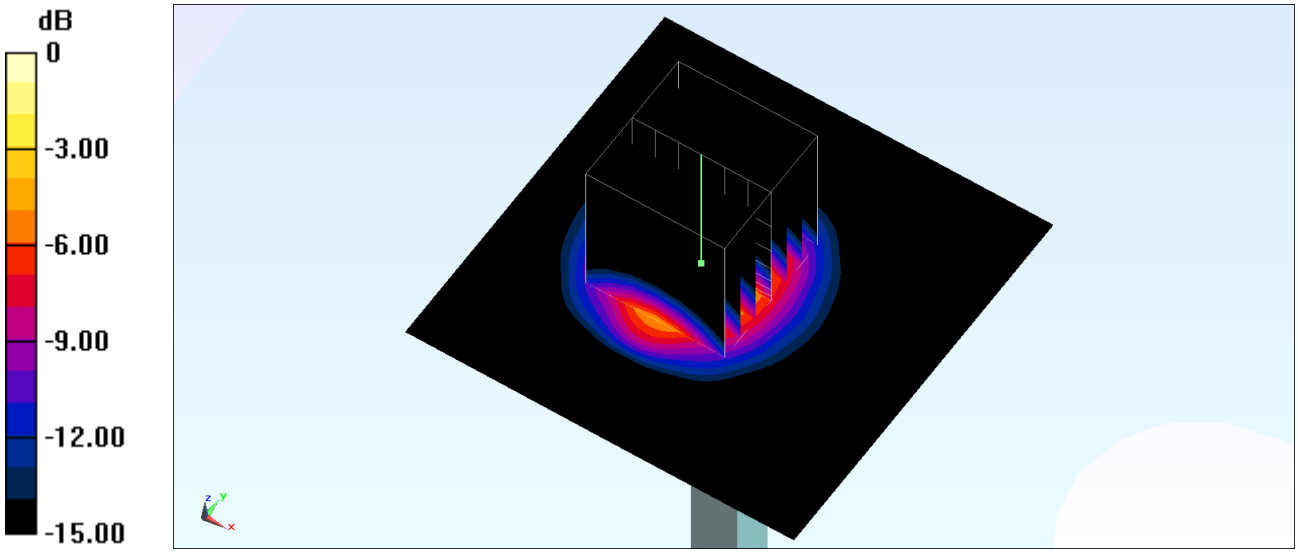

0 dB = 12.5 W/kg = 10.97 dBW/kg

System Check_Head_3500MHz

DUT: D3500V2-1014

Communication System: CW; Frequency: 3500 MHz;Duty Cycle: 1:1
Medium: HSL_3500_220423 Medium parameters used: f = 3500 MHz; σ = 2.983 S/m; ε_r = 37.75; ρ = 1000 kg/m^3
Ambient Temperature：23.5 ℃; Liquid Temperature：22.5 ℃

DASY5 Configuration:
- Probe: EX3DV4 - SN7694; ConvF(6.99, 6.99, 6.99) @ 3500 MHz; Calibrated: 2022/1/24
- Sensor-Surface: 1.4mm (Mechanical Surface Detection)
- Electronics: DAE4 Sn1424; Calibrated: 2022/1/20
- Phantom: SAM_Left; Type: SAM; Serial: TP:1477
- Measurement SW: DASY52, Version 52.10 (4);SEMCAD X Version 14.6.14 (7483)

Pin=50mW/Area Scan (61x61x1): Interpolated grid: dx=1.200 mm, dy=1.200 mm
Maximum value of SAR (interpolated) = 6.01 W/kg

Pin=50mW/Zoom Scan (7x7x8)/Cube 0: Measurement grid: dx=5mm, dy=5mm, dz=1.4mm
Reference Value = 46.58 V/m; Power Drift = 0.05 dB
Peak SAR (extrapolated) = 8.02 W/kg
SAR(1 g) = 3.13 W/kg; SAR(10 g) = 1.2 W/kg
Maximum value of SAR (measured) = 6.03 W/kg

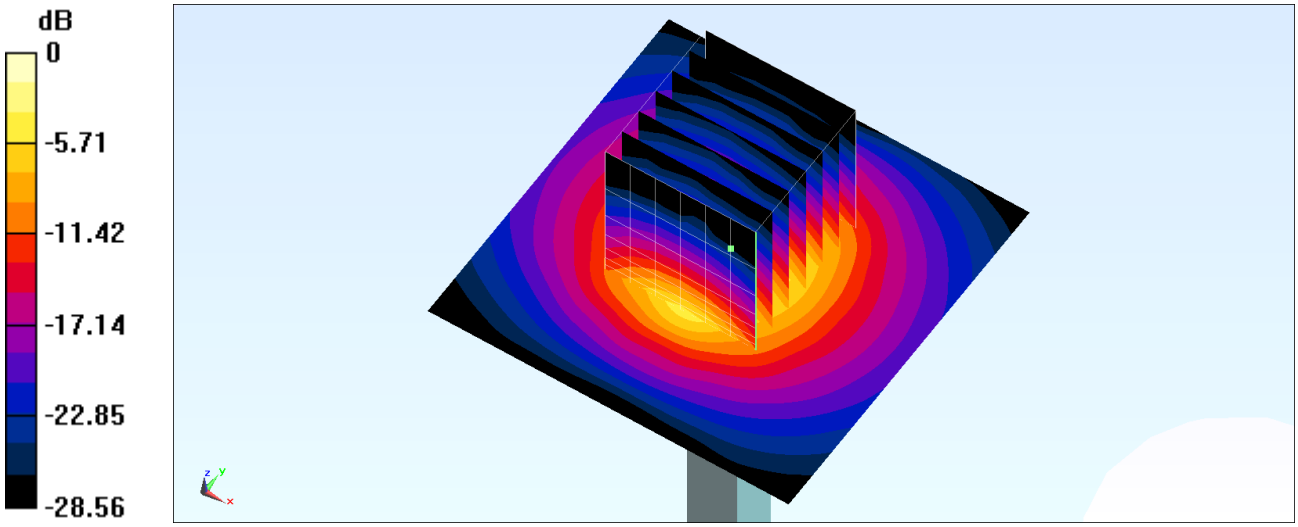

0 dB = 6.03 W/kg = 7.80 dBW/kg

System Check_Head_3500MHz

DUT: D3500V2-1014

Communication System: CW; Frequency: 3500 MHz;Duty Cycle: 1:1
Medium: HSL_3500_220424 Medium parameters used: f = 3500 MHz; σ = 2.972 S/m; ε_r = 37.695; ρ = 1000 kg/m^3
Ambient Temperature：23.4 ℃; Liquid Temperature：22.4 ℃

DASY5 Configuration:
- Probe: EX3DV4 - SN7694; ConvF(6.99, 6.99, 6.99) @ 3500 MHz; Calibrated: 2022/1/24
- Sensor-Surface: 1.4mm (Mechanical Surface Detection)
- Electronics: DAE4 Sn1424; Calibrated: 2022/1/20
- Phantom: SAM_Left; Type: SAM; Serial: TP:1477
- Measurement SW: DASY52, Version 52.10 (4);SEMCAD X Version 14.6.14 (7483)

Pin=50mW/Area Scan (61x61x1): Interpolated grid: dx=1.200 mm, dy=1.200 mm
Maximum value of SAR (interpolated) = 5.98 W/kg

Pin=50mW/Zoom Scan (7x7x8)/Cube 0: Measurement grid: dx=5mm, dy=5mm, dz=1.4mm
Reference Value = 46.58 V/m; Power Drift = 0.03 dB
Peak SAR (extrapolated) = 7.99 W/kg
SAR(1 g) = 3.12 W/kg; SAR(10 g) = 1.19 W/kg
Maximum value of SAR (measured) = 6.01 W/kg

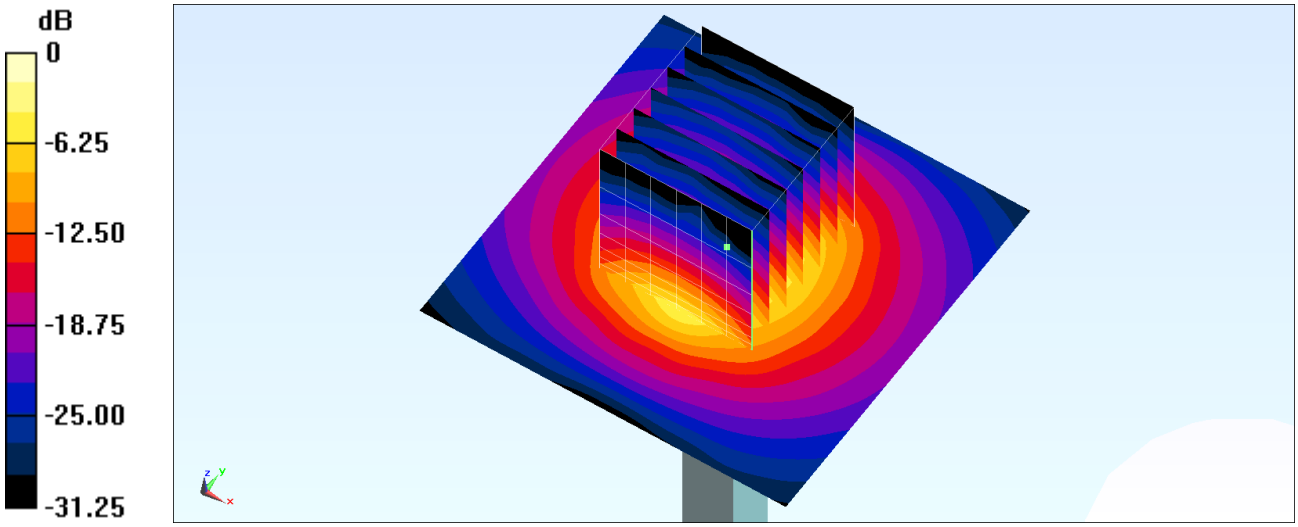

0 dB = 6.01 W/kg = 7.79 dBW/kg

System Check_Head_3500MHz

DUT: D3500V2-1014

Communication System: CW; Frequency: 3500 MHz;Duty Cycle: 1:1
Medium: HSL_3500_220425 Medium parameters used: f = 3500 MHz; σ = 2.971 S/m; ε_r = 37.695; ρ = 1000 kg/m^3
Ambient Temperature：23.7 ℃; Liquid Temperature：22.7 ℃

DASY5 Configuration:
- Probe: EX3DV4 - SN7694; ConvF(6.99, 6.99, 6.99) @ 3500 MHz; Calibrated: 2022/1/24
- Sensor-Surface: 1.4mm (Mechanical Surface Detection)
- Electronics: DAE4 Sn1424; Calibrated: 2022/1/20
- Phantom: SAM_Left; Type: SAM; Serial: TP:1477
- Measurement SW: DASY52, Version 52.10 (4);SEMCAD X Version 14.6.14 (7483)

Pin=50mW/Area Scan (61x61x1): Interpolated grid: dx=1.200 mm, dy=1.200 mm
Maximum value of SAR (interpolated) = 5.98 W/kg

Pin=50mW/Zoom Scan (7x7x8)/Cube 0: Measurement grid: dx=5mm, dy=5mm, dz=1.4mm
Reference Value = 46.58 V/m; Power Drift = 0.03 dB
Peak SAR (extrapolated) = 7.99 W/kg
SAR(1 g) = 3.12 W/kg; SAR(10 g) = 1.19 W/kg
Maximum value of SAR (measured) = 6.00 W/kg

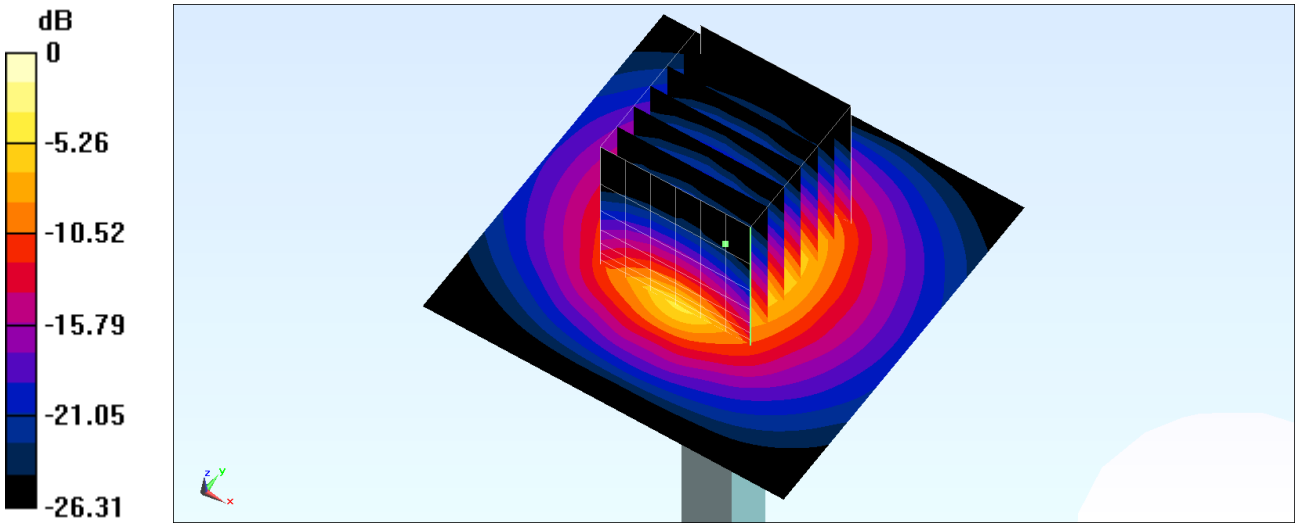

0 dB = 6.00 W/kg = 7.78 dBW/kg

System Check_Head_3500MHz

DUT: D3500V2-1014

Communication System: CW; Frequency: 3500 MHz;Duty Cycle: 1:1
Medium: HSL_3500_220503 Medium parameters used: f = 3500 MHz; σ = 2.956 S/m; ε_r = 37.629; ρ = 1000 kg/m^3
Ambient Temperature：23.6 ℃; Liquid Temperature：22.6 ℃

DASY5 Configuration:
- Probe: EX3DV4 - SN3931; ConvF(7.14, 7.14, 7.14) @ 3500 MHz; Calibrated: 2021/10/21
- Sensor-Surface: 1.4mm (Mechanical Surface Detection)
- Electronics: DAE4 Sn1399; Calibrated: 2022/2/28
- Phantom: SAM_Left; Type: SAM; Serial: TP:1477
- Measurement SW: DASY52, Version 52.10 (4);SEMCAD X Version 14.6.14 (7483)

Pin=50mW/Area Scan (61x61x1): Interpolated grid: dx=1.200 mm, dy=1.200 mm
Maximum value of SAR (interpolated) = 6.24 W/kg

Pin=50mW/Zoom Scan (7x7x7)/Cube 0: Measurement grid: dx=5mm, dy=5mm, dz=1.4mm
Reference Value = 47.88 V/m; Power Drift = 0.12 dB
Peak SAR (extrapolated) = 9.80 W/kg
SAR(1 g) = 3.56 W/kg; SAR(10 g) = 1.34 W/kg
Maximum value of SAR (measured) = 7.06 W/kg

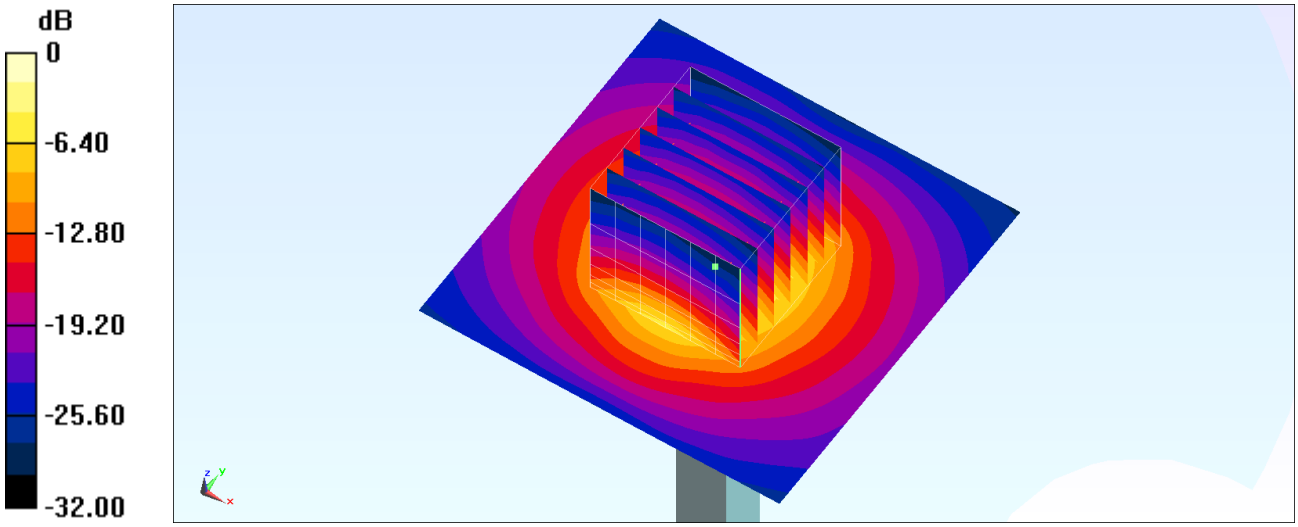

0 dB = 7.06 W/kg = 8.49 dBW/kg

System Check_Head_3500MHz

DUT: D3500V2-1014

Communication System: CW; Frequency: 3500 MHz;Duty Cycle: 1:1
Medium: HSL_3500_220506 Medium parameters used: f = 3500 MHz; σ = 3.021 S/m; ε_r = 38.254; ρ = 1000 kg/m^3
Ambient Temperature：23.3 ℃; Liquid Temperature：22.3 ℃

DASY5 Configuration:
- Probe: EX3DV4 - SN7694; ConvF(6.99, 6.99, 6.99) @ 3500 MHz; Calibrated: 2022/1/24
- Sensor-Surface: 1.4mm (Mechanical Surface Detection)
- Electronics: DAE4 Sn1424; Calibrated: 2022/1/20
- Phantom: SAM_Left; Type: SAM; Serial: TP:1477
- Measurement SW: DASY52, Version 52.10 (4);SEMCAD X Version 14.6.14 (7483)

Pin=50mW/Area Scan (61x61x1): Interpolated grid: dx=1.200 mm, dy=1.200 mm
Maximum value of SAR (interpolated) = 6.08 W/kg

Pin=50mW/Zoom Scan (7x7x8)/Cube 0: Measurement grid: dx=5mm, dy=5mm, dz=1.4mm
Reference Value = 46.58 V/m; Power Drift = 0.03 dB
Peak SAR (extrapolated) = 8.12 W/kg
SAR(1 g) = 3.17 W/kg; SAR(10 g) = 1.21 W/kg
Maximum value of SAR (measured) = 6.10 W/kg

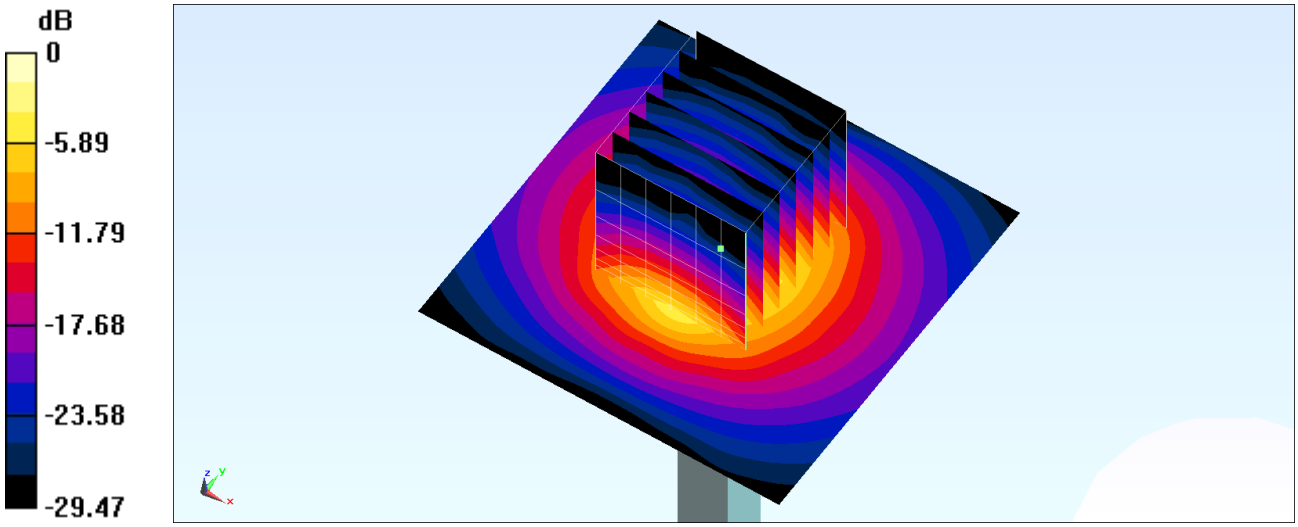

0 dB = 6.10 W/kg = 7.85 dBW/kg

System Check_Head_3500MHz

DUT: D3500V2-1014

Communication System: CW; Frequency: 3500 MHz;Duty Cycle: 1:1
Medium: HSL_3500_220507 Medium parameters used: f = 3500 MHz; σ = 2.979 S/m; ε_r = 37.807; ρ = 1000 kg/m^3
Ambient Temperature：23.1 ℃; Liquid Temperature：22.1 ℃

DASY5 Configuration:
- Probe: EX3DV4 - SN3931; ConvF(7.14, 7.14, 7.14) @ 3500 MHz; Calibrated: 2021/10/21
- Sensor-Surface: 1.4mm (Mechanical Surface Detection)
- Electronics: DAE4 Sn1399; Calibrated: 2022/2/28
- Phantom: SAM_Left; Type: SAM; Serial: TP:1477
- Measurement SW: DASY52, Version 52.10 (4);SEMCAD X Version 14.6.14 (7483)

Pin=100mW/Area Scan (61x61x1): Interpolated grid: dx=1.200 mm, dy=1.200 mm
Maximum value of SAR (interpolated) = 14.0 W/kg

Pin=100mW/Zoom Scan (7x7x7)/Cube 0: Measurement grid: dx=5mm, dy=5mm, dz=1.4mm
Reference Value = 70.64 V/m; Power Drift = 0.04 dB
Peak SAR (extrapolated) = 19.2 W/kg
SAR(1 g) = 6.94 W/kg; SAR(10 g) = 2.56 W/kg
Maximum value of SAR (measured) = 13.8 W/kg

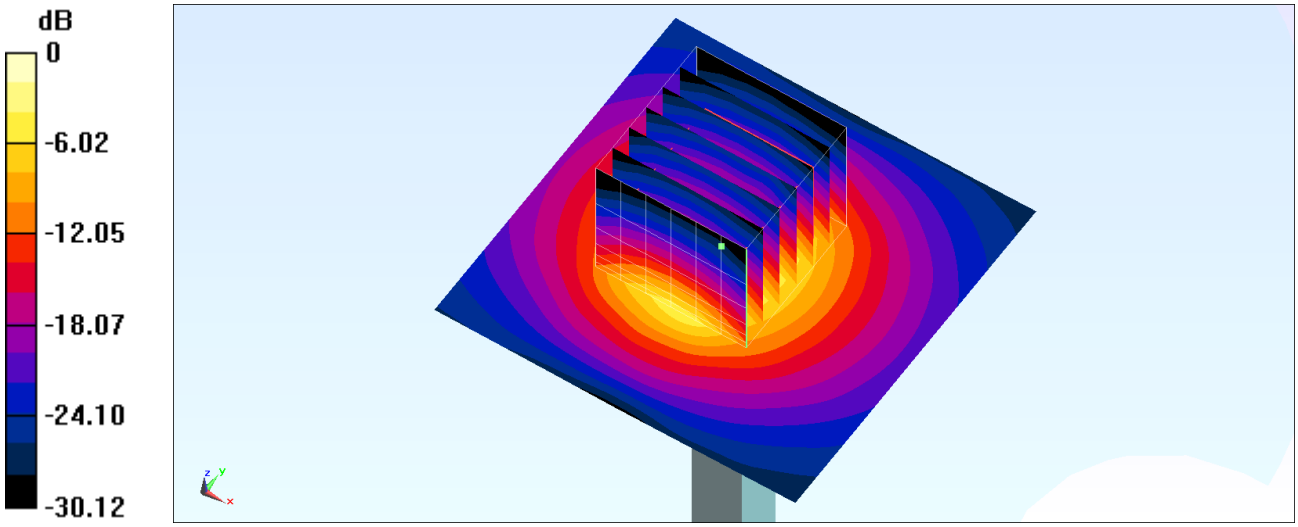

0 dB = 13.8 W/kg = 11.40 dBW/kg

System Check_Head_3500MHz

DUT: D3500V2-1014

Communication System: CW; Frequency: 3500 MHz;Duty Cycle: 1:1
Medium: HSL_3500_220528 Medium parameters used: f = 3500 MHz; σ = 3.002 S/m; ε_r = 38.819; ρ = 1000 kg/m^3
Ambient Temperature：23.2 ℃; Liquid Temperature：22.2 ℃

DASY5 Configuration:
- Probe: EX3DV4 - SN7694; ConvF(6.99, 6.99, 6.99) @ 3500 MHz; Calibrated: 2022/1/24
- Sensor-Surface: 1.4mm (Mechanical Surface Detection)
- Electronics: DAE4 Sn1424; Calibrated: 2022/1/20
- Phantom: SAM_Left; Type: SAM; Serial: TP:1477
- Measurement SW: DASY52, Version 52.10 (4);SEMCAD X Version 14.6.14 (7483)

Pin=50mW/Area Scan (61x61x1): Interpolated grid: dx=1.200 mm, dy=1.200 mm
Maximum value of SAR (interpolated) = 6.04 W/kg

Pin=50mW/Zoom Scan (7x7x8)/Cube 0: Measurement grid: dx=5mm, dy=5mm, dz=1.4mm
Reference Value = 46.58 V/m; Power Drift = 0.12 dB
Peak SAR (extrapolated) = 8.07 W/kg
SAR(1 g) = 3.15 W/kg; SAR(10 g) = 1.2 W/kg
Maximum value of SAR (measured) = 6.07 W/kg

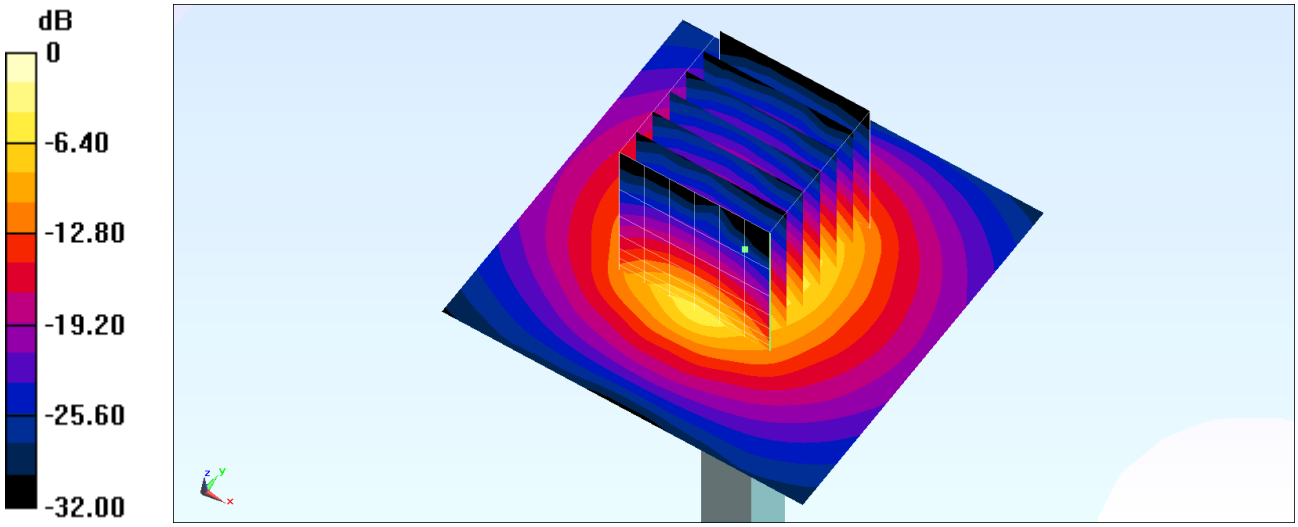

0 dB = 6.07 W/kg = 7.83 dBW/kg

System Check_Head_3700MHz

DUT: D3700V2-1022

Communication System: CW; Frequency: 3700 MHz;Duty Cycle: 1:1
Medium: HSL_3700_220423 Medium parameters used: f = 3700 MHz; σ = 3.195 S/m; ε_r = 37.548; ρ = 1000 kg/m^3
Ambient Temperature：23.5 ℃; Liquid Temperature：22.5 ℃

DASY5 Configuration:
- Probe: EX3DV4 - SN7694; ConvF(6.8, 6.8, 6.8) @ 3700 MHz; Calibrated: 2022/1/24
- Sensor-Surface: 1.4mm (Mechanical Surface Detection)
- Electronics: DAE4 Sn1424; Calibrated: 2022/1/20
- Phantom: SAM_Left; Type: SAM; Serial: TP:1477
- Measurement SW: DASY52, Version 52.10 (4);SEMCAD X Version 14.6.14 (7483)

Pin=50mW/Area Scan (61x61x1): Interpolated grid: dx=1.200 mm, dy=1.200 mm
Maximum value of SAR (interpolated) = 6.47 W/kg

Pin=50mW/Zoom Scan (7x7x8)/Cube 0: Measurement grid: dx=5mm, dy=5mm, dz=1.4mm
Reference Value = 47.14 V/m; Power Drift = 0.10 dB
Peak SAR (extrapolated) = 8.72 W/kg
SAR(1 g) = 3.25 W/kg; SAR(10 g) = 1.2 W/kg
Maximum value of SAR (measured) = 6.45 W/kg

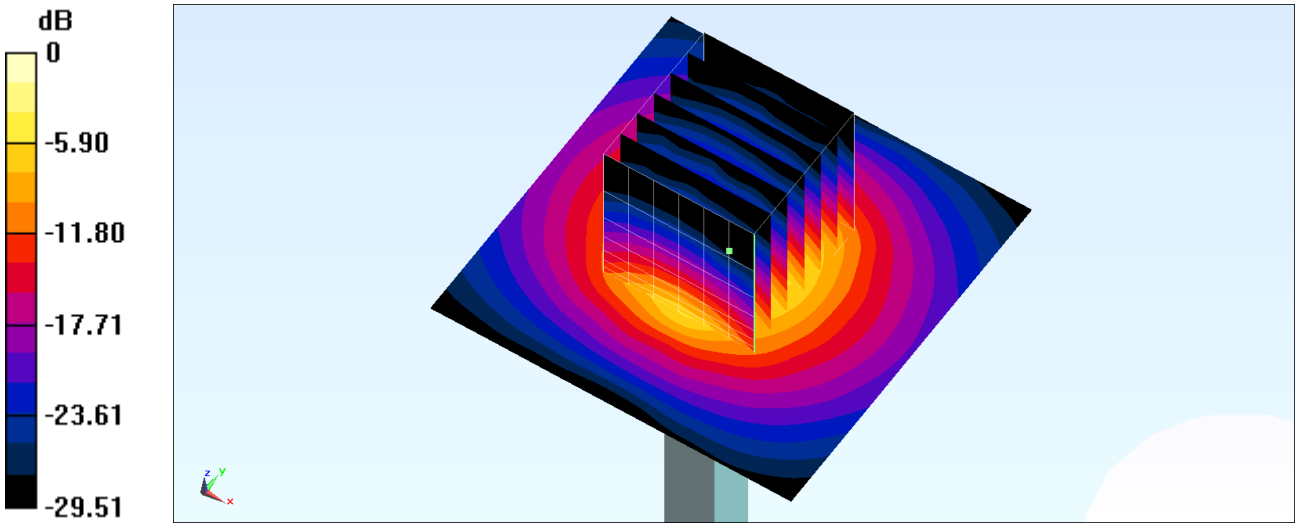

0 dB = 6.45 W/kg = 8.10 dBW/kg

System Check_Head_3700MHz

DUT: D3700V2-1022

Communication System: CW; Frequency: 3700 MHz;Duty Cycle: 1:1
Medium: HSL_3700_220424 Medium parameters used: f = 3700 MHz; σ = 3.184 S/m; ε_r = 37.493; ρ = 1000 kg/m^3
Ambient Temperature：23.4 ℃; Liquid Temperature：22.4 ℃

DASY5 Configuration:
- Probe: EX3DV4 - SN7694; ConvF(6.8, 6.8, 6.8) @ 3700 MHz; Calibrated: 2022/1/24
- Sensor-Surface: 1.4mm (Mechanical Surface Detection)
- Electronics: DAE4 Sn1424; Calibrated: 2022/1/20
- Phantom: SAM_Left; Type: SAM; Serial: TP:1477
- Measurement SW: DASY52, Version 52.10 (4);SEMCAD X Version 14.6.14 (7483)

Pin=50mW/Area Scan (61x61x1): Interpolated grid: dx=1.200 mm, dy=1.200 mm
Maximum value of SAR (interpolated) = 6.45 W/kg

Pin=50mW/Zoom Scan (7x7x8)/Cube 0: Measurement grid: dx=5mm, dy=5mm, dz=1.4mm
Reference Value = 47.14 V/m; Power Drift = 0.02 dB
Peak SAR (extrapolated) = 8.69 W/kg
SAR(1 g) = 3.24 W/kg; SAR(10 g) = 1.2 W/kg
Maximum value of SAR (measured) = 6.43 W/kg

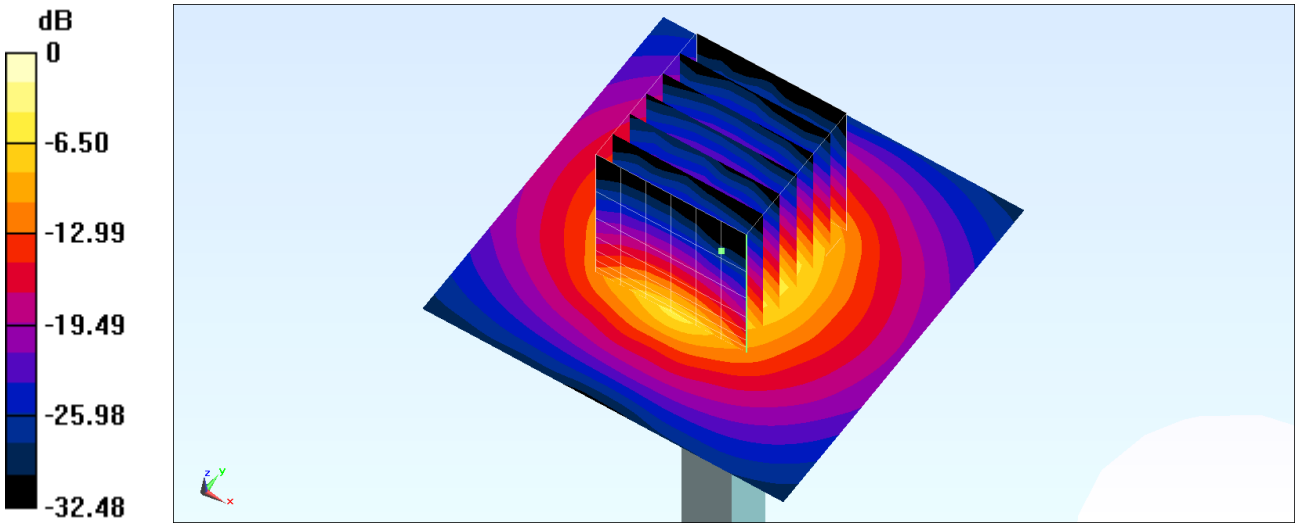

0 dB = 6.43 W/kg = 8.08 dBW/kg

System Check_Head_3700MHz

DUT: D3700V2-1022

Communication System: CW; Frequency: 3700 MHz;Duty Cycle: 1:1
Medium: HSL_3700_220425 Medium parameters used: f = 3700 MHz; σ = 3.183 S/m; ε_r = 37.493; ρ = 1000 kg/m^3
Ambient Temperature：23.7 ℃; Liquid Temperature：22.7 ℃

DASY5 Configuration:
- Probe: EX3DV4 - SN7694; ConvF(6.8, 6.8, 6.8) @ 3700 MHz; Calibrated: 2022/1/24
- Sensor-Surface: 1.4mm (Mechanical Surface Detection)
- Electronics: DAE4 Sn1424; Calibrated: 2022/1/20
- Phantom: SAM_Left; Type: SAM; Serial: TP:1477
- Measurement SW: DASY52, Version 52.10 (4);SEMCAD X Version 14.6.14 (7483)

Pin=50mW/Area Scan (61x61x1): Interpolated grid: dx=1.200 mm, dy=1.200 mm
Maximum value of SAR (interpolated) = 6.45 W/kg

Pin=50mW/Zoom Scan (7x7x8)/Cube 0: Measurement grid: dx=5mm, dy=5mm, dz=1.4mm
Reference Value = 47.14 V/m; Power Drift = 0.04 dB
Peak SAR (extrapolated) = 8.69 W/kg
SAR(1 g) = 3.24 W/kg; SAR(10 g) = 1.2 W/kg
Maximum value of SAR (measured) = 6.42 W/kg

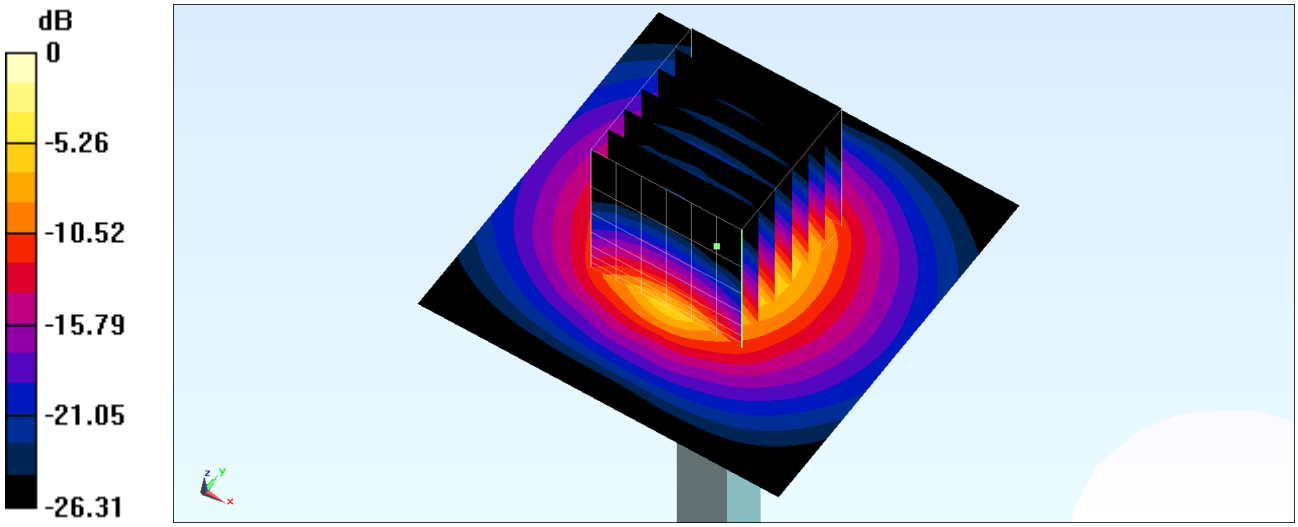

0 dB = 6.42 W/kg = 8.08 dBW/kg

System Check_Head_3700MHz

DUT: D3700V2-1022

Communication System: CW; Frequency: 3700 MHz;Duty Cycle: 1:1
Medium: HSL_3700_220503 Medium parameters used: f = 3700 MHz; σ = 3.142 S/m; ε_r = 37.33; ρ = 1000 kg/m^3
Ambient Temperature：23.6 ℃; Liquid Temperature：22.6 ℃

DASY5 Configuration:
- Probe: EX3DV4 - SN3931; ConvF(7.03, 7.03, 7.03) @ 3700 MHz; Calibrated: 2021/10/21
- Sensor-Surface: 1.4mm (Mechanical Surface Detection)
- Electronics: DAE4 Sn1399; Calibrated: 2022/2/28
- Phantom: SAM_Left; Type: SAM; Serial: TP:1477
- Measurement SW: DASY52, Version 52.10 (4);SEMCAD X Version 14.6.14 (7483)

Pin=100mW/Area Scan (61x61x1): Interpolated grid: dx=1.200 mm, dy=1.200 mm
Maximum value of SAR (interpolated) = 15.0 W/kg

Pin=100mW/Zoom Scan (7x7x7)/Cube 0: Measurement grid: dx=5mm, dy=5mm, dz=1.4mm
Reference Value = 71.19 V/m; Power Drift = 0.12 dB
Peak SAR (extrapolated) = 20.5 W/kg
SAR(1 g) = 7.33 W/kg; SAR(10 g) = 2.65 W/kg
Maximum value of SAR (measured) = 14.8 W/kg

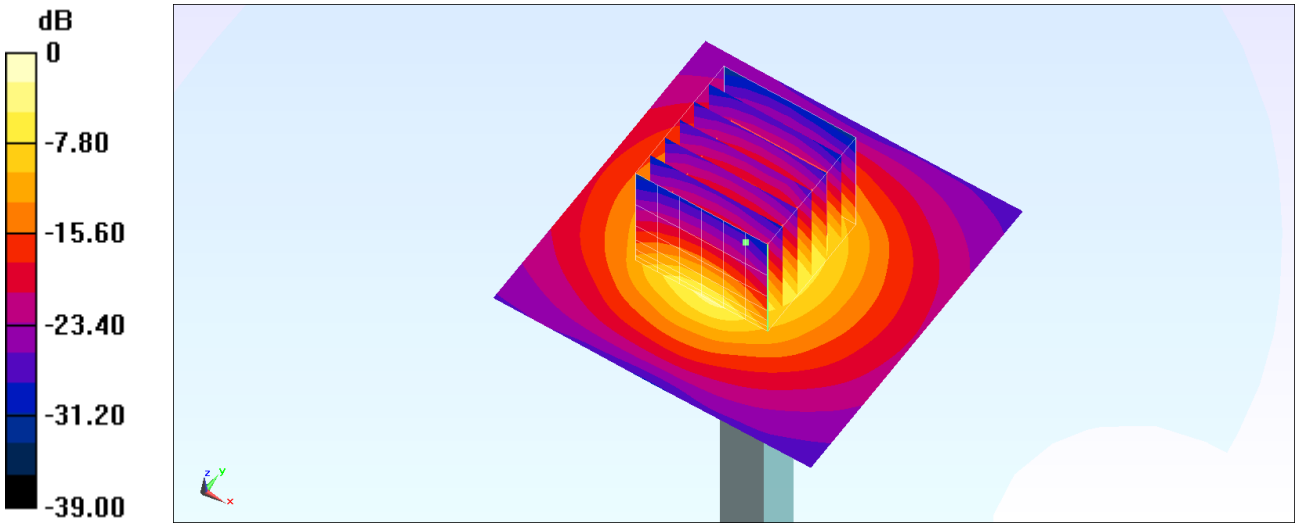

0 dB = 14.8 W/kg = 11.70 dBW/kg

System Check_Head_3700MHz

DUT: D3700V2-1022

Communication System: CW; Frequency: 3700 MHz;Duty Cycle: 1:1
Medium: HSL_3700_220506 Medium parameters used: f = 3700 MHz; σ = 3.236 S/m; ε_r = 38.052; ρ = 1000 kg/m^3
Ambient Temperature：23.3 ℃; Liquid Temperature：22.3 ℃

DASY5 Configuration:
- Probe: EX3DV4 - SN7694; ConvF(6.8, 6.8, 6.8) @ 3700 MHz; Calibrated: 2022/1/24
- Sensor-Surface: 1.4mm (Mechanical Surface Detection)
- Electronics: DAE4 Sn1424; Calibrated: 2022/1/20
- Phantom: SAM_Left; Type: SAM; Serial: TP:1477
- Measurement SW: DASY52, Version 52.10 (4);SEMCAD X Version 14.6.14 (7483)

Pin=50mW/Area Scan (61x61x1): Interpolated grid: dx=1.200 mm, dy=1.200 mm
Maximum value of SAR (interpolated) = 6.55 W/kg

Pin=50mW/Zoom Scan (7x7x8)/Cube 0: Measurement grid: dx=5mm, dy=5mm, dz=1.4mm
Reference Value = 47.14 V/m; Power Drift = 0.02 dB
Peak SAR (extrapolated) = 8.83 W/kg
SAR(1 g) = 3.3 W/kg; SAR(10 g) = 1.22 W/kg
Maximum value of SAR (measured) = 6.53 W/kg

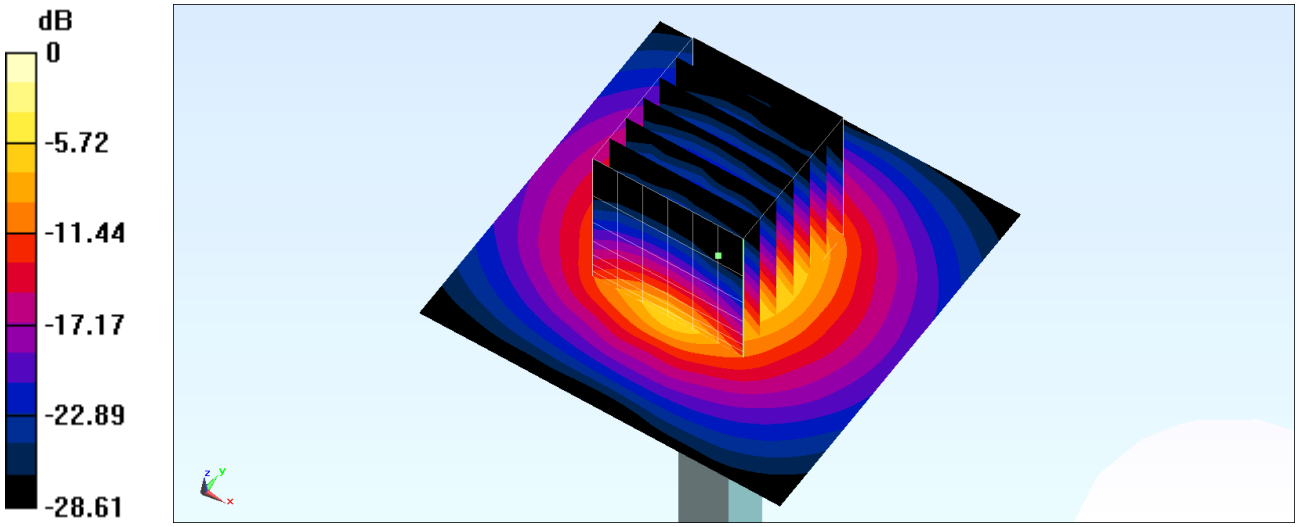

0 dB = 6.53 W/kg = 8.15 dBW/kg

System Check_Head_3700MHz

DUT: D3700V2-1022

Communication System: CW; Frequency: 3700 MHz;Duty Cycle: 1:1
Medium: HSL_3700_220507 Medium parameters used: f = 3700 MHz; σ = 3.191 S/m; ε_r = 37.605; ρ = 1000 kg/m^3
Ambient Temperature：23.1 ℃; Liquid Temperature：22.1 ℃

DASY5 Configuration:
- Probe: EX3DV4 - SN3931; ConvF(7.03, 7.03, 7.03) @ 3700 MHz; Calibrated: 2021/10/21
- Sensor-Surface: 1.4mm (Mechanical Surface Detection)
- Electronics: DAE4 Sn1399; Calibrated: 2022/2/28
- Phantom: SAM_Left; Type: SAM; Serial: TP:1477
- Measurement SW: DASY52, Version 52.10 (4);SEMCAD X Version 14.6.14 (7483)

Pin=100mW/Area Scan (61x61x1): Interpolated grid: dx=1.200 mm, dy=1.200 mm
Maximum value of SAR (interpolated) = 14.0 W/kg

Pin=100mW/Zoom Scan (7x7x7)/Cube 0: Measurement grid: dx=5mm, dy=5mm, dz=1.4mm
Reference Value = 65.42 V/m; Power Drift = -0.04 dB
Peak SAR (extrapolated) = 19.5 W/kg
SAR(1 g) = 6.56 W/kg; SAR(10 g) = 2.34 W/kg
Maximum value of SAR (measured) = 13.4 W/kg

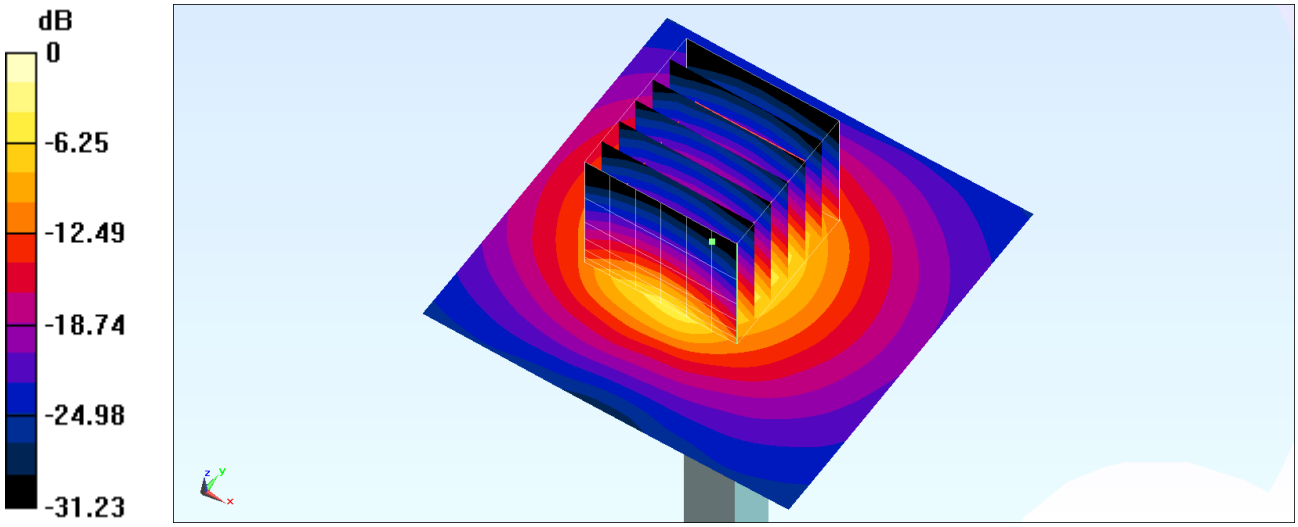

0 dB = 13.4 W/kg = 11.27 dBW/kg

System Check_Head_3700MHz

DUT: D3700V2-1022

Communication System: CW; Frequency: 3700 MHz;Duty Cycle: 1:1
Medium: HSL_3700_220528 Medium parameters used: f = 3700 MHz; σ = 3.19 S/m; ε_r = 38.52; ρ = 1000 kg/m^3
Ambient Temperature：23.2 ℃; Liquid Temperature：22.2 ℃

DASY5 Configuration:
- Probe: EX3DV4 - SN7694; ConvF(6.8, 6.8, 6.8) @ 3700 MHz; Calibrated: 2022/1/24
- Sensor-Surface: 1.4mm (Mechanical Surface Detection)
- Electronics: DAE4 Sn1424; Calibrated: 2022/1/20
- Phantom: SAM_Left; Type: SAM; Serial: TP:1477
- Measurement SW: DASY52, Version 52.10 (4);SEMCAD X Version 14.6.14 (7483)

Pin=50mW/Area Scan (61x61x1): Interpolated grid: dx=1.200 mm, dy=1.200 mm
Maximum value of SAR (interpolated) = 6.46 W/kg

Pin=50mW/Zoom Scan (7x7x8)/Cube 0: Measurement grid: dx=5mm, dy=5mm, dz=1.4mm
Reference Value = 47.14 V/m; Power Drift = 0.16 dB
Peak SAR (extrapolated) = 8.71 W/kg
SAR(1 g) = 3.25 W/kg; SAR(10 g) = 1.2 W/kg
Maximum value of SAR (measured) = 6.44 W/kg

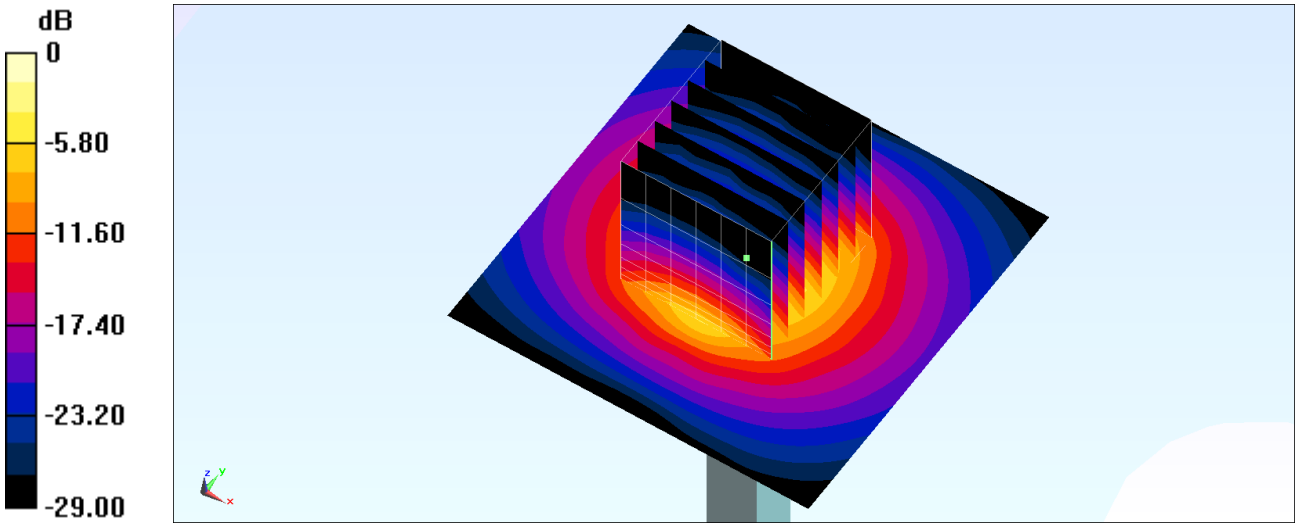

0 dB = 6.44 W/kg = 8.09 dBW/kg