HEARING AID COMPATIBILITY T-COIL TEST REPORT

FCC ID	**: A4RGWKK3**
Equipment	**: Phone**
T-Rating	**: T4**
Applicant	**: Google LLC 1600 Amphitheatre Parkway, Mountain View, California, 94043 USA**
Standard	**: FCC 47 CFR §20.19 ANSI C63.19-2011**

The product was received on Sep. 15, 2022 and testing was started from Sep. 25, 2022 and completed on Sep. 27, 2022. We, SPORTON INTERNATIONAL INC., would like to declare that the tested sample provide by manufacturer and the test data has been evaluated in accordance with the test procedures given in ANSI 63.19-2011 / 47 CFR Part 20.19 and has been pass the FCC requirement.

The test results in this report apply exclusively to the tested model / sample. Without written approval of SPORTON INTERNATIONAL INC. EMC & Wireless Communications Laboratory, the test report shall not be reproduced except in full.

Approved by: Cona Huang / Deputy Manager

SPORTON INTERNATIONAL INC. EMC & Wireless Communications Laboratory
No. 52, Huaya 1st Rd., Guishan Dist., Taoyuan City, Taiwan (R.O.C.)

Table of Contents

1. Attestation of Test Results 4
2. General Information 5
3. Testing Location 6
4. Applied Standards 6
5. Air Interface and Operating Mode 7
6. Measurement standards for T-Coil 8
6.1 Frequency Response 8
6.2 T-Coil Signal Quality Categories 8
6.3 Description of EUT Test Position 9
7. T-Coil Test Procedure 10
7.1 Test Flow Chart 11
7.2 Test Setup Diagram for GSM/UMTS/CDMA/VoLTE/VoWiFi 12
7.3 Test Setup Diagram for GSM/CDMA/UMTS/LTE/WiFi OTT Voice Calling 14
7.4 PAG Reuse section: HAC T-coil measurement procedures for 5G NR 16
8. Test Equipment List 17
9. T-Coil testing for CMRS Voice 18
9.1 GSM Tests Results 18
9.2 UMTS Tests Results 19
10. T-Coil testing for CMRS IP Voice 20
10.1 VoLTE Tests Results 20
10.2 VoNR evaluation 22
10.3 VoWiFi Tests Results 23
11. T-Coil testing for OTT Voice Calling 25
11.1 5G FR1 OTT evaluation 28
12. Uncertainty Assessment 29
13. References 30

Appendix A. Plots of T-Coil Measurement
Appendix B. DASY Calibration Certificate
Appendix C. Test Setup Photos

History of this test report

Report No.	Version	Description	Issued Date
HA280208-01B	Rev. 01	Initial issue of report	Nov. 25, 2022

1. Attestation of Test Results

Air Interface	Band MHz	T-Rating	Frequency Response	Magnetic Intensity
GSM CMRS Voice	GSM850	T4	Pass	Pass
	GSM1900	T4	Pass	Pass
OTT over EDGE	EDGE850	T4	Pass	Pass
	EDGE1900	T4	Pass	Pass
UMTS CMRS Voice	Band 2	T4	Pass	Pass
	Band 4	T4	Pass	Pass
	Band 5	T4	Pass	Pass
OTT over UMTS	Band 2	T4	Pass	Pass
	Band 4	T4	Pass	Pass
	Band 5	T4	Pass	Pass
VoLTE	Band 7	T4	Pass	Pass
	Band 12/17	T4	Pass	Pass
	Band 13	T4	Pass	Pass
	Band 14	T4	Pass	Pass
	Band 2/25	T4	Pass	Pass
	Band 5/26	T4	Pass	Pass
	Band 30	T4	Pass	Pass
	Band 38/41	T4	Pass	Pass
	Band 48	T4	Pass	Pass
	Band 4/66	T4	Pass	Pass
	Band 71	T4	Pass	Pass
OTT over LTE	Band 13	T4	Pass	Pass
	Band 41	T4	Pass	Pass
VoNR	n5	T4	Pass	Pass
	n7	T4	Pass	Pass
	n12	T4	Pass	Pass
	n14	T4	Pass	Pass
	n2/n25	T4	Pass	Pass
	n30	T4	Pass	Pass
	n38/n41	T4	Pass	Pass
	n48	T4	Pass	Pass
	n66	T4	Pass	Pass
	n71	T4	Pass	Pass
	n77	T4	Pass	Pass
OTT over 5G NR	n12	T4	Pass	Pass
	n41	T4	Pass	Pass
VoWiFI	2450	T4	Pass	Pass
	5200	T4	Pass	Pass
	5300	T4	Pass	Pass
	5500	T4	Pass	Pass
	5800 / 5900	T4	Pass	Pass
OTT over WiFi	2450	T4	Pass	Pass
	5200	T4	Pass	Pass
Date Tested	2022/09/25 ~ 2022/09/27			

The device is compliance with HAC limits specified in guidelines FCC 47CFR §20.19 and ANSI Standard ANSI C63.19.

Reviewed by: Jason Wang
Report Producer: Carlie Tsai

2. General Information

Product Feature & Specification	
Applicant Name	Google LLC
Equipment Name	Phone
FCC ID	A4RGWKK3
S/N	28251FQHN00100
Frequency Band	GSM850: 824.2 MHz ~ 848.8 MHz GSM1900: 1850.2 MHz ~ 1909.8 MHz WCDMA Band II: 1850 MHz ~ 1910 MHz WCDMA Band IV: 1710 MHz ~ 1755 MHz WCDMA Band V: 824 MHz ~ 849 MHz LTE Band 2: 1850 MHz ~ 1910 MHz LTE Band 4: 1710 MHz ~ 1755 MHz LTE Band 5: 824 MHz ~ 849 MHz LTE Band 7: 2500 MHz ~ 2570 MHz LTE Band 12: 699 MHz ~ 716 MHz LTE Band 13: 777 MHz ~ 787 MHz LTE Band 14: 788 MHz ~ 798 MHz LTE Band 17: 704 MHz ~ 716 MHz LTE Band 25: 1850 MHz ~ 1915 MHz LTE Band 26: 814 MHz ~ 849 MHz LTE Band 30: 2305 MHz ~ 2315 MHz LTE Band 38: 2570 MHz ~ 2620 MHz LTE Band 41: 2496 MHz ~ 2690 MHz LTE Band 48: 3550 MHz ~ 3700 MHz LTE Band 66: 1710 MHz ~ 1780 MHz LTE Band 71: 663 MHz ~ 698 MHz 5G NR n2 : 1850 MHz ~ 1910 MHz 5G NR n5 : 824 MHz ~ 849 MHz 5G NR n7 : 2500 MHz ~ 2570 MHz 5G NR n12 : 699 MHz ~ 716 MHz 5G NR n14 : 788 MHz ~ 798 MHz 5G NR n25 : 1850 MHz ~ 1915 MHz 5G NR n30 : 2305 MHz ~ 2315 MHz 5G NR n38 : 2570 MHz ~ 2620 MHz 5G NR n41 : 2496 MHz ~ 2690 MHz 5G NR n48 : 3550 MHz ~ 3700 MHz 5G NR n66 : 1710 MHz ~ 1780 MHz 5G NR n71 : 663 MHz ~ 698 MHz 5G NR n77: 3450 MHz ~ 3550 MHz, 3700 MHz ~ 3980 MHz WLAN 2.4GHz Band: 2400 MHz ~ 2483.5 MHz WLAN 5.2G Band: 5150 MHz ~ 5250 MHz WLAN 5.3G Band: 5250 MHz ~ 5350 MHz WLAN 5.5G Band: 5470 MHz ~ 5725 MHz WLAN 5.8G Band: 5725 MHz ~ 5850 MHz WLAN 5.9G UNII4 Band: 5850 MHz ~ 5895 MHz WLAN 6E: 5925 MHz ~ 6425 MHz, 6425 MHz ~ 6525 MHz, 6525 MHz ~ 6875 MHz, 6875 MHz ~ 7125 MHz Bluetooth: 2400 MHz ~ 2483.5 MHz NFC : 13.56 MHz
Mode	GSM/GPRS/EGPRS RMC/AMR 12.2Kbps HSDPA HSUPA LTE: QPSK, 16QAM, 64QAM, 256QAM 5G NR: DFT-s-OFDM/CP-OFDM, Pi/2 BPSK/QPSK/16QAM/64QAM/256QAM WLAN: 802.11a/b/g/n/ac/ax HT20/HT40/VHT20/VHT40/VHT80/HE20/HE40/HE80 Bluetooth BR/EDR/LE NFC: ASK

3. Testing Location

Sporton Lab is accredited to ISO 17025 by Taiwan Accreditation Foundation (TAF code: 1190) and the FCC designation No. TW1190 under the FCC 2.948(e) by Mutual Recognition Agreement (MRA) in FCC test.

Testing Laboratory	
Test Site	SPORTON INTERNATIONAL INC.
Test Site Location	No. 52, Huaya 1st Rd., Guishan Dist., Taoyuan City, Taiwan (R.O.C.) TEL:+886-3-327-3456 FAX: +886-3-328-4978
Test Site No.	Sporton Site No.: **SAR04-HY**

4. Applied Standards

- FCC CFR47 Part 20.19
- ANSI C63.19 2011-version
- FCC KDB 285076 D01 HAC Guidance v06r02
- FCC KDB 285076 D02 T Coil testing v04
- FCC KDB 285076 D03 HAC FAQ v01r06

5. Air Interface and Operating Mode

Air Interface	Band MHz	Type	C63.19 Tested	Simultaneous Transmitter	Name of Voice Service	Power Reduction
GSM	GSM850	VO	Yes	WLAN, BT	CMRS Voice	No
	GSM1900			WLAN, BT		No
	EDGE850	VD	Yes	WLAN, BT	Google Meet (1)	No
	EDGE1900					
UMTS	850	VO	Yes	WLAN, BT	CMRS Voice	No
	1750			WLAN, BT		No
	1900			WLAN, BT		No
	HSPA	VD	Yes	WLAN, BT	Google Meet (1)	No
LTE (FDD)	Band 2	VD	Yes	5G NR, WLAN, BT	VoLTE / Google Meet (1)	No
	Band 4			5G NR, WLAN, BT		No
	Band 5			5G NR, WLAN, BT		No
	Band 7			5G NR, WLAN, BT		No
	Band 12			5G NR, WLAN, BT		No
	Band 13			5G NR, WLAN, BT		No
	Band 14			5G NR, WLAN, BT		No
	Band 17			5G NR, WLAN, BT		No
	Band 25			5G NR, WLAN, BT		No
	Band 26			5G NR, WLAN, BT		No
	Band 30			5G NR, WLAN, BT		No
	Band 66			5G NR, WLAN, BT		No
	Band 71			5G NR, WLAN, BT		No
LTE (TDD)	Band 38	VD	Yes	5G NR, WLAN, BT	VoLTE / Google Meet (1)	No
	Band 41			5G NR, WLAN, BT		No
	Band 48			5G NR, WLAN, BT		No
5G NR	n2	VD	Yes	LTE, WLAN, BT	VoNR / Google Meet (1)	No
	n5			LTE, WLAN, BT		No
	n7			LTE, WLAN, BT		No
	n12			LTE, WLAN, BT		No
	n14			LTE, WLAN, BT		No
	n25			LTE, WLAN, BT		No
	n30			LTE, WLAN, BT		No
	n38			LTE, WLAN, BT		No
	n41			LTE, WLAN, BT		No
	n48			LTE, WLAN, BT		No
	n66			LTE, WLAN, BT		No
	n71			LTE, WLAN, BT		No
	n77			LTE, WLAN, BT		No
Wi-Fi	2450	VD	Yes	GSM, WCDMA, LTE, 5G NR	VoWiFi(1) / Google Meet (1)	No
	5200			GSM, WCDMA, LTE, 5G NR, BT		No
	5300			GSM, WCDMA, LTE, 5G NR, BT		No
	5500			GSM, WCDMA, LTE, 5G NR, BT		No
	5800 / 5900			GSM, WCDMA, LTE, 5G NR, BT		No
Wi-Fi	6E	VD	No(2)	GSM, WCDMA, LTE, 5G NR, BT	VoWiFi(1) / Google Meet (1)	No
BT	2450	DT	No	GSM, WCDMA, LTE, 5G NR, 5G/6G WLAN	NA	No

Type Transport:
VO= Voice only
DT= Digital Transport only (no voice)
VD= CMRS and IP Voice Service over Digital Transport

Remark:
1. For protocols not listed in Table 7.1 of ANSI C63.19-2011 or the ANSI C63.19-2011 VoLTE interpretation, the average speech level of −20 dBm0 should be used.
2. The WiFi 6E above 6GHz portion is currently not within the scope of FCC Part 20.19, and therefore not evaluated
3. The device have similar frequency in some LTE and NR bands: LTE B12/17, 5/26, 4/66, 2/25, 38/41 and NR Band 2/25, 38/41, since the supported frequency spans for the smaller LTE and NR bands are completely cover by the larger LTE and NR bands, therefore, only larger LTE and NR bands were required to be tested for hearing-aid compliance.
4. Because features of Google Meet allow the option of voice-only communications, Meet has been tested for HAC/T-Coil compatibility to ensure the best user experience.

6. Measurement standards for T-Coil

6.1 Frequency Response

The frequency response of the perpendicular component of the magnetic field, measured in 1/3 octave bands, shall follow the response curve specified in this sub-clause, over the frequency range 300 Hz to 3000 Hz.
Figure 1.1 and Figure 1.2 provide the boundaries as a function of frequency. These response curves are for true field-strength measurements of the T-Coil signal. Thus, the 6 dB/octave probe response has been corrected from the raw readings.

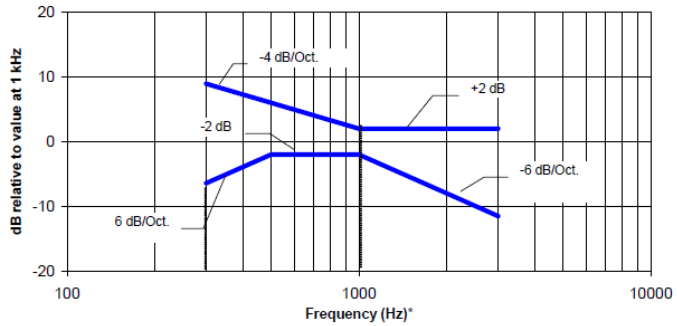

NOTE—The frequency response is between 300 Hz and 3000 Hz.

Fig. 1.1 Magnetic field frequency response for WDs with field strength≤-15dB at 1 KHz

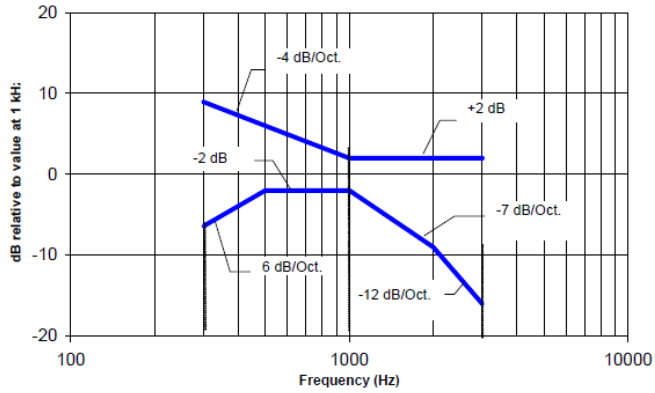

NOTE—The frequency response is between 300 Hz and 3000 Hz.

Fig. 1.2 Magnetic field frequency response for WDs with a field that exceeds –15 dB(A/m) at 1 kHz

6.2 T-Coil Signal Quality Categories

This section provides the signal quality requirement for the intended T-Coil signal from a WD. Only the RF immunity of the hearing aid is measured in T-Coil mode. It is assumed that a hearing aid can have no immunity to an interference signal in the audio band, which is the intended reception band for this mode. A device is assessed beginning by determining the category of the RF environment in the area of the T-Coil source.
The RF measurements made for the T-Coil evaluation are used to assign the category T1 through T4. The limitation is given in Table 1. This establishes the RF environment presented by the WD to a hearing aid.

Category	Telephone parameters WD signal quality ((signal + noise) to noise ratio in dB)
Category T1	0 to 10 dB
Category T2	10 to 20 dB
Category T3	20 to 30 dB
Category T4	> 30 dB

Table 1 T-Coil Signal Quality Categories

6.3 Description of EUT Test Position

Fig.3 illustrates the references and reference plane that shall be used in a typical EUT emissions measurement. The principle of this section is applied to EUT with similar geometry. Please refer to Appendix C for the setup photographs.

- The area is 5 cm by 5 cm.
- The area is centered on the audio frequency output transducer of the EUT.
- The area is in a reference plane, which is defined as the planar area that contains the highest point in the area of the phone that normally rests against the user's ear. It is parallel to the centerline of the receiver area of the phone and is defined by the points of the receiver-end of the EUT handset, which, in normal handset use, rest against the ear.
- The measurement plane is parallel to, and 10 mm in front of, the reference plane.

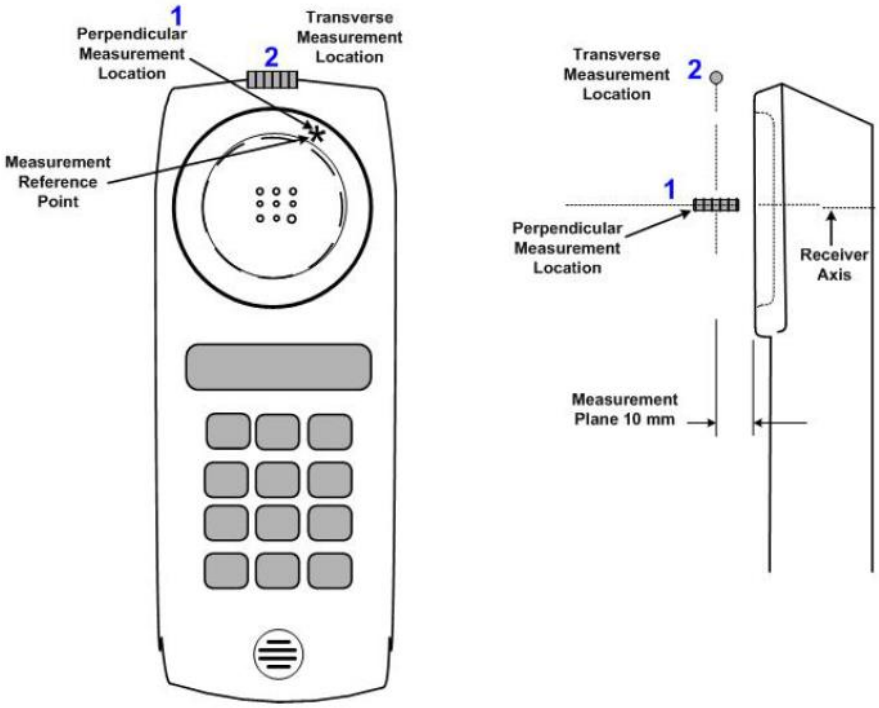

Fig.3 A typical EUT reference and plane for T-Coil measurements

7. T-Coil Test Procedure

Referenced to ANSI C63.19-2011, Section 7.4

This section describes the procedures used to measure the ABM (T-Coil) performance of the WD. In addition to measuring the absolute signal levels, the A-weighted magnitude of the unintended signal shall also be determined. To assure that the required signal quality is measured, the measurement of the intended signal and the measurement of the unintended signal must be made at the same location for each measurement position. In addition, the RF field strength at each measurement location must be at or below that required for the assigned category.

Measurements shall not include undesired properties from the WD's RF field; therefore, use of a coaxial connection to a base station simulator or non-radiating load might be necessary. However, even with a

coaxial connection to a base station simulator or nonradiating load, there might still be RF leakage from the WD, which can interfere with the desired measurement. Pre-measurement checks should be made to avoid this possibility.

All measurements shall be performed with the WD operating on battery power with an appropriate normal speech audio signal input level given in ANSI C63.19-2011 Table 7.1. If the device display can be turned off during a phone call, then that may be done during the measurement as well,

Measurement shall be performed at two locations specified in ANSI C63.19-2011 A.3, with the correct probe orientation for a particular location, in a multistage sequence by first measuring the field intensity of the desired T-Coil signal the same location as the desired ABM or T-Coil signal (ABM1). Then, the ratio of desired to undesired magnetic components (ABM2) must be measured at the same location as the desired ABM or T-Coil signal (ABM1), and the ratio of desired to undesired ABM signals must be calculated. For the perpendicular field location, only the ABM1 frequency response shall be determined in a third measurement stage.

The following steps summarize the basic test flow for determining ABM1 and ABM2. These steps assume that a sine wave or narrowband 1/3 octave signal can be used for the measurement of ABM1.

a. A validation of the test setup and instrumentation may be performed using a TMFS or Helmholtz coil Measure the emissions and confirm that they are within the specified tolerance.
b. Position the WD in the test setup and connect the WD RF connector to a base station simulator or a non-radiating load. Confirm that equipment that requires calibration has been calibrated, and that the noise level meets the requirements given in ANSI C63.19-2011 clause 7.3.1.
c. The drive level to the WD is set such that the reference input level specified in ANSI C63.19-2011 Table 7.1 is input to the base station simulator (or manufacturer's test mode equivalent) in 1 kHz, 1/3 octave band. This drive level shall be used for the T-Coil signal test (ABM1) at f = 1 kHz. Either a sine wave at 1025 Hz or a voice-like signal, band-limited to the 1 kHz 1/3 octave, as defined in ANSI C63.19-2011 clause 7.4.2, shall be used for the reference audio signal. If interference is found at 1025 Hz, an alternative nearby reference audio signal frequency may be used. The same drive level shall be used for the ABM1 frequency response measurements at each 1/3 octave band center frequency. The WD volume control may be set at any level up to maximum, provided that a signal at any frequency at maximum modulation would not result in clipping or signal overload.
d. Determine the magnetic measurement locations for the WD device (A.3), if not already specified by the manufacturer, as described in ANSI C63.19-2011 clause 7.4.4.1.1 and 7.4.4.2.
e. At each measurement location, measure and record the desired T-Coil magnetic signals (ABM1 at fi) as described in ANSI C63.19-2011 clause 7.4.4.2 in each individual ISO 266-1975 R10 standard 1/3 octave band. The desired audio band input frequency (fi) shall be centered in each 1/3 octave band maintaining the same drive level as determined in item c) and the reading taken for that band.
f. Equivalent methods of determining the frequency response may also be employed, such as fast Fourier transform (FFT) analysis using noise excitation or input-output comparison using simulated speech. The full-band integrated probe output, as specified in D.9, may be used, as long as the appropriate calibration curve is applied to the measured result, so as to yield an accurate measurement of the field magnitude. (The resulting measurement shall be an accurate measurement in dB A/m.)
g. All Measurements of the desired signal shall be shown to be of the desired signal and not of an undesired signal. This may be shown by turning the desired signal ON and OFF with the probe measuring the same location. If the scanning method is used, the scans shall show that all measurement points selected for the ABM1 measurement meet the ambient and test system noise criteria in ANSI C63.19-2011 clause 7.3.1.
h. At the measurement location for each orientation, measure and record the undesired broadband audio magnetic signal (ABM2) as specified in ANSI C63.19-2011 clause 7.4.4.4 with no audio signal applied (or digital zero applied, if appropriate) using A-weighting and the half-band integrator. Calculate the ratio of the desired to undesired signal strength (i.e., signal quality).
i. Obtain the data from the postprocessor, SEMCAD, and determine the category that properly classifies the signal quality based on ANSI C63.19-2011 Table 8.5.

7.1 Test Flow Chart

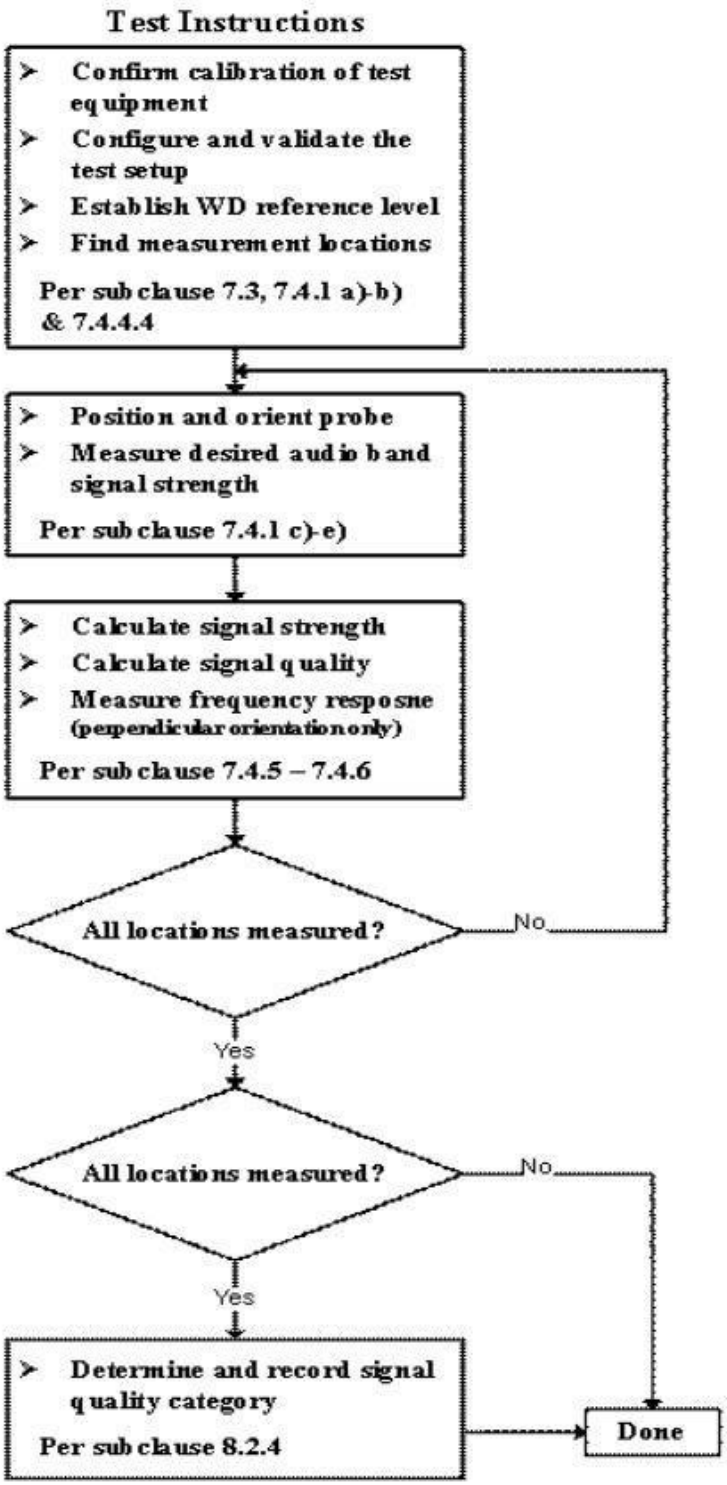

Fig. 2 T-Coil Signal Test flowchart

7.2 Test Setup Diagram for GSM/UMTS/CDMA/VoLTE/VoWiFi

Test Setup for GSM / CDMA / VoLTE / VoWiFi

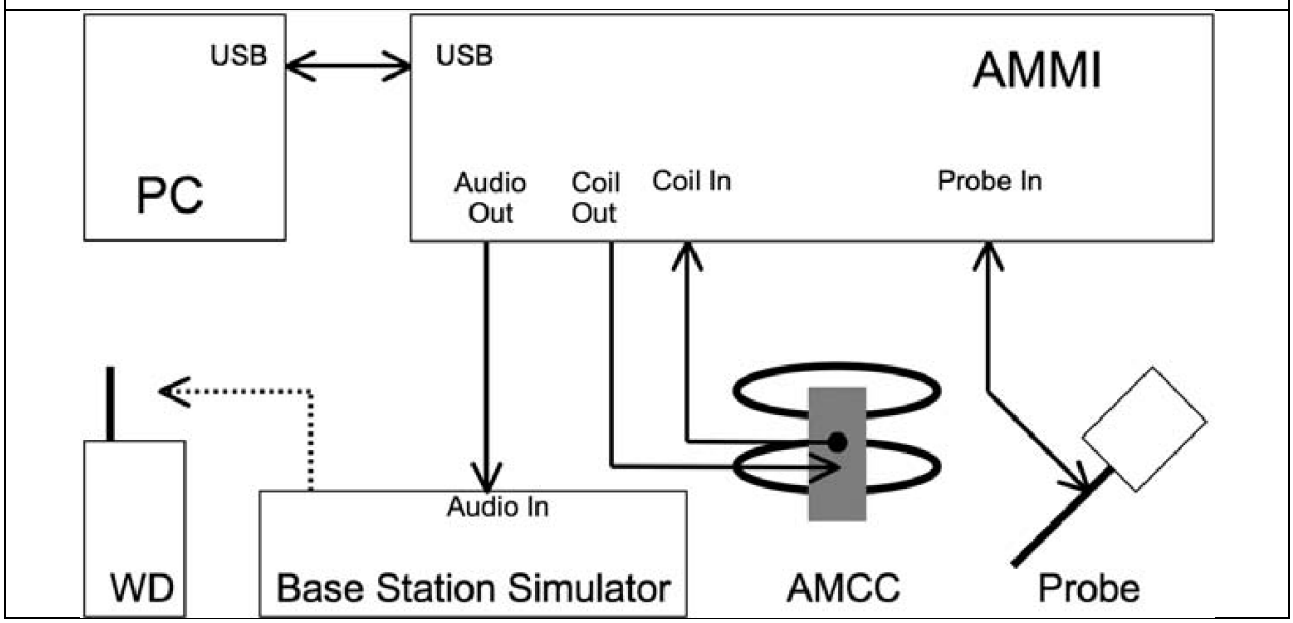

General Note:

1. Define the all applicable input audio level as below according to C63 and KDB 285076 D02:
   - GSM input level: -16dBm0
   - UMTS input level: -16dBm0
   - CDMA input level: -18dBm0
   - VoLTE input level: -16dBm0
   - VoWiFi input level: -20dBm0
2. For GSM / UMTS / CDMA test setup and input level, the correct input level definition is via a communication tester CMU200's "Decoder Cal" and "Codec Cal" with audio option B52 and B85 to set the correct audio input levels.
3. CMU200 is able to output 1kHz audio signal equivalent to 3.14dBm0 at "Decoder Cal." configuration, the signal reference is used to adjust the AMMI gain setting to reach -16dBm0 for GSM/UMTS and -18dBm0 for CDMA. CMW500 input is calibrated and the relation between the analog input voltage and the internal level in dBm0 can be determined.
4. Voice over Long-Term Evolution (VoLTE) is a standard for high-speed wireless communication for mobile phones and data terminals — including IoT devices and wearables. It is based on the IP Multimedia Subsystem (IMS) network, with specific profiles for control and media planes of voice service on LTE defined by GSMA in PRD IR.92. This approach results in the voice service (control and media planes) being delivered as data flows within the LTE data bearer. This means that there is no dependency on the legacy circuit-switched voice network to be maintained.
5. The test setup used for VoLTE and VoWiFI over IMS is via the callbox of CMW500 for T-coil measurement. The data application unit of the CMW500 is used to simulate the IP multimedia subsystem server. The CMW500 can be manually configured to control the speech input level and ensure that the result is -16dBm0 for VoLTE, and -20dBm0 for VoWiFi during the IMS connection.
6. According to KDB 285076 D02, T-Coil testing for VoLTE and VoWiFi requires test instrumentation that (1) can ensure that the system is able to establish an IP call from/to the handset under test, (2) through an IMS (IP Multimedia Subsystem) and SIP/IP server, (3) to an analog audio adapter containing the permissible set of codecs used by the device under test, and (4) inject the necessary C63.19 test tones at the average speech level for the measurement. The test setup is illustrated in Figure 3.9. The R&S CMW500 is used as a system simulator for VoLTE and VoWiFi T-Coil testing. The DAU (Data Application Unit) in CMW500 integrates an IMS and SIP/IP server that can establish VoLTE and Wi-Fi calling, and transport the test tones from AMMI (Audio Magnetic Measuring Instrument) to EUT.
7. T-coil performance assessment for 5G FR1 was performed according to KDB 285076 D03, Q&A 9, details are illustrated in section 7.4.

<Define the input level for GSM/UMTS/CDMA>

1. The Required gain factor for the specific signal shall typically be multiplied by this factor to achieve approx. the same level as for the 1kHz sine signal
2. The below calculation formula is an example that shows how to determine the input level for the device.

The predefined signal types have the following differences / factors compared to the 1kHz sine signal:

Signal [file name]	Duration [s]	Peak-to-RMS [dB]	RMS [dB]	Required gain factor *)	Gain setting
1kHz sine	---	3.0	0.0	1.00	
48k_1.025kHz_10s.wav	10	3.0	0.0	1.00	
48k_1kHz_3.15kHz_10s.wav	10	6.0	-3.0	1.42	
48k_315Hz_1kHz_10s.wav	10	6.0	-2.9	1.40	
48k_csek_8k_441_white_10s.wav	10	13.8	-10.5	3.34	
48k_multisine_50-5000_10s.wav	10	11.1	-7.9	2.49	
48k_voice_1kHz_1s.wav	1	16.2	-12.7	4.33	
48k_voice_300-3000_2s.wav	2	21.6	-18.6	8.48	

(*) The gain for the specific signal shall typically be multiplied by this factor to acheive approx. the same level as for the 1kHz sine signal.

Insert the gain applicable for your setup in the last column of the table.

<Example define the input level for GSM/UMTS/CDMA>

Gain Value	20* log(gain)	AMCC Coil In	Level
(linear)	dB	(dBv RMS)	dBm0
		-2.47	3.14
10	20	-19.85	-14.24
8.17	18.24	-21.61	-16

Signal Type	Duration (s)	Peak to RMS (dB)	RMS (dB)	Required Gain Factor	Calculated Gain Setting
1kHz sine	-	3	0	1	8.17
48k_voice_1kHz	1	16.2	-12.7	4.33	35.36
48k_voice_300Hz ~ 3kHz	2	21.6	-18.6	8.48	69.25

<Example define the input level for VoLTE>

Gain Value	dBm0	Full scal Voltage	dB	AMMI audio out dBv (RMS)	AMCC Coil Out (dBv (RMS)
	3.14	1.5		0.51	
100	5.61		40	2.98	3.13
8.31	-16		18.39		-18.48
Signal Type	**Duration (s)**	**Peak to RMS (dB)**	**RMS (dB)**	**Gain Factor**	**Gain Setting**
1kHz sine	-	3	0	1	8.31
48k_voice_1kHz	1	16.2	-12.7	4.33	35.98
48k_voice_300-3000	2	21.6	-18.6	8.48	70.46

<Example define the input level for VoWiFi>

Gain Value	dBm0	Full scal Voltage	dB	AMMI audio out dBv (RMS)	AMCC Coil Out (dBv (RMS)
	3.14	1.5		0.51	
100	5.61		40	2.98	3.13
5.24	-20		14.39		-22.48
Signal Type	**Duration (s)**	**Peak to RMS (dB)**	**RMS (dB)**	**Gain Factor**	**Gain Setting**
1kHz sine	-	3	0	1	5.24
48k_voice_1kHz	1	16.2	-12.7	4.33	22.70
48k_voice_300-3000	2	21.6	-18.6	8.48	44.46

7.3 Test Setup Diagram for GSM/CDMA/UMTS/LTE/WiFi OTT Voice Calling

Test Setup for OTT Voice calling

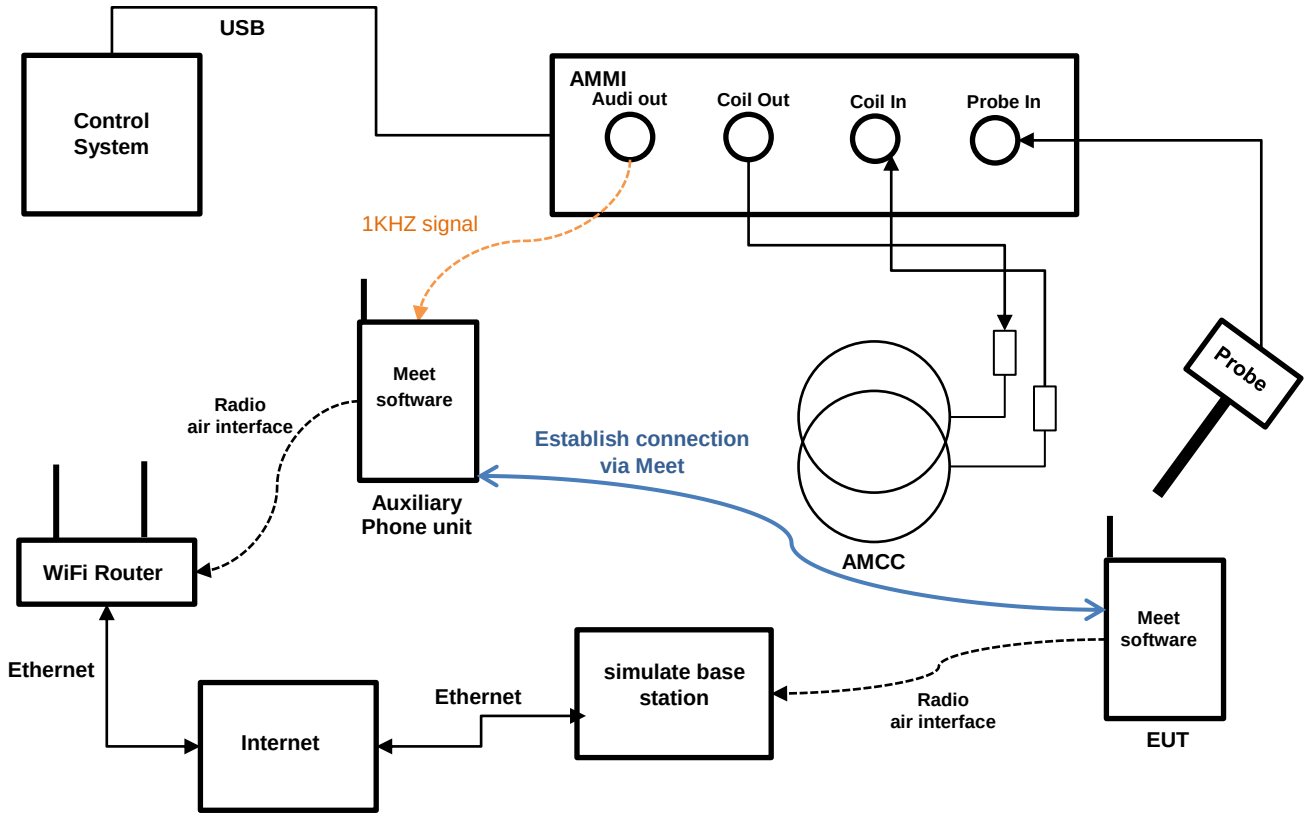

General Note:

1. Define the all applicable input audio level as below according to C63 and KDB 285076 D02v03:
   - OTT Voice calling input Level: -20dBm0
2. OTT voice, such as that enabled when a user opts to communicate in a voice-only mode using the Google Meet application, is a methodology and group of technologies for the delivery of voice communications and multimedia sessions over the internet. The terms Internet telephony, broadband telephony, and broadband phone service specifically refer to the provisioning of communications services (voice, fax, SMS, voice-messaging) over the public Internet, rather than via the public switched telephone network (PSTN).
3. Google Meet application support code and bitrate are listed in section 11, and the customized Google Meet software is installed on a mobile phone that is used as the Auxiliary for the test. The software enables the audio coding rate to be changed, and reports the input digital audio level before audio processing, which can be used to calibrate the input audio level.
4. This device comes with the preinstalled OTT application that supports the voice-only communication option on the Google Meet application and related codec. The test configuration establishes a call between the device under test and an auxiliary handset via Google Meet server.
5. The test setup used for Google Meet OTT voice-only communication is via the data application unit on the simulate base station, connected to the internet via the Google Meet server to the auxiliary device. The auxiliary device runs special software that allows the codecs and bit rate to be fixed to a specific value. Please refer to section 11. An assessment was made of each of the different codec bit rates to determine the worst case for each different OTT transport (WiFi, LTE, GSM, WCDMA).
6. The auxiliary device includes software that displays the audio level in dBFS, which allows calibration of the system to establish the -20dBm0 reference level. After establishing the voice-only communication between auxiliary device and device under test, the audio output from the AMMI is injected into the auxiliary device. The gain factor to establish a reference level of -20dBm0 for use during the test is determined as detailed in the next page based on the 0dBFull Scale (0dBFS) value being equivalent to 3.14dBm0.
7. T-coil performance assessment for 5G FR1 was performed according to KDB 285076 D03 v01r04, Q&A 9, details are illustrated in section 7.4.

<Define the input level for OTT Voice Calling>

1. The Required gain factor for the specific signal shall typically be multiplied by this factor to achieve approx. the same level as for the 1kHz sine signal
2. The below calculation formula is an example and shows how to determine the input level for the device.
3. Input a gain value to readout the -23dBFS level as reference. (0dBFS = 3.14 dBm0)
4. Adjust the gain level until the readout for the dBFS level changes to -24dBFS.
5. Based on the step 1 and 2, and then calculate the gain value(dB) by interpolation to get the -20dBm0 corresponding gain value.

The predefined signal types have the following differences / factors compared to the 1kHz sine signal:

Signal [file name]	Duration [s]	Peak-to-RMS [dB]	RMS [dB]	Required gain factor *)	Gain setting
1kHz sine	---	3.0	0.0	1.00	
48k_1.025kHz_10s.wav	10	3.0	0.0	1.00	
48k_1kHz_3.15kHz_10s.wav	10	6.0	-3.0	1.42	
48k_315Hz_1kHz_10s.wav	10	6.0	-2.9	1.40	
48k_csek_8k_441_white_10s.wav	10	13.8	-10.5	3.34	
48k_multisine_50-5000_10s.wav	10	11.1	-7.9	2.49	
48k_voice_1kHz_1s.wav	1	16.2	-12.7	4.33	
48k_voice_300-3000_2s.wav	2	21.6	-18.6	8.48	

(*) The gain for the specific signal shall typically be multiplied by this factor to acheive approx. the same level as for the 1kHz sine signal.

Insert the gain applicable for your setup in the last column of the table.

Step	Signal type	Audio out		Target Level	
		Gain value	Gain value (dB)	dBFS	dBm0
Step 1	1KHz Sine	7.7	17.73 (Ref.)	-23	
Step 2	1KHz Sine	6.8	16.65	-24	
Step 3	1KHz Sine	7.57**	17.58*	-23.14	-20
Remark	(*) Based on the step 1 and 2 and then via interpolation to get this value. (**) Gain value=10^Gain value(dB)/20				

Signal type	Duration (s)	Peak to RMS (dB)	RMS (dB)	Gain Factor	Gain value
1kHz sine		3	0	1	7.57
48k_voice_1kHz_1s.wav	1	16.2	-12.7	4.33	32.77
48k_voice_300-3000_2s.wav	2	21.6	-18.6	8.48	64.79

1. According to the gain setting for 1kHz sine wave, determine the gain setting for signals above.
2. The gain for the specific signal is multiplied by this factor to achieve the same level as for the 1kHz sine signal.

7.4 PAG Reuse section: HAC T-coil measurement procedures for 5G NR

5G VoNR test procedure:

1. According to KDB 285076 D03 Q&A 9, use the interim procedure for 5G Sub 6 calls that use the same protocol, Codec(s) and reference level as VoLTE over LTE (i.e. -16 dBm0).
2. For LTE, establish the ABM1S65G value by using the ABM1LTE magnetic intensity for an LTE call in the same band as the 5G sub6 band under test.
3. For VoNR, establish the ABM1S65G value by using an IP connection for magnetic intensity for a call in the same band as the 5G sub6 band under test
4. Also note the actual ABM2LTE value and establish an ABM2S65G value, using a 5G manufacture test mode over 5G Sub 6 channels for the same band under test.
5. Document in the test report matrix:
   a. Include columns for both ABM2LTE & ABM2S65G for comparison
   b. Establish the S+N1/N2 for the rating
      i. S+N1 = ABM1LTE (step 1) and
      ii. N2 = ABM2S65G (step 2).
      iii. Subtract 3 dB from S+N1/N2
   c. Rating based on (ABM1LTE/ ABM2S65G) -3dB.

Air Interface	BW (MHz)	Modulation	RB Size	RB offset	Channel	Probe Position	(1) ABM1 dB (A/m)	(2) ABM2 dB (A/m)	Signal Quality dB	(3) Signal Quality -3 dB	T Rating	Ambient Noise dB (A/m)	Freq. Response Variation dB
LTE Band 26	15M	QPSK	1	0	26865	Axial (Z)	4.17	-51.51	55.68	-	T4	-50.32	1.03
						Transversal(Y)	-5.34	-50.23	44.89	-	T4	-50.27	
FR1 n5	20M	BPSK	1	1	167300	Axial (Z)	4.17	-50.22	54.39	51.39	T4	-50.42	NA
						Transversal(Y)	-5.34	-49.78	44.44	41.44	T4	-50.34	

5G NR OTT test procedure:

1. According to KDB 285076 D03 Q&A 9, use the interim procedure for 5G Sub 6 calls that use the same protocol, Codec(s) and reference level as OTT voice calling applications (such as the option for voice-only communications in the Google Meet app)
2. For OTT, establish the ABM1S65G value by using an IP connection for magnetic intensity for a call in the same LTE band as the 5G sub6 band under test
3. Also note the actual ABM2LTE/OTT value and establish an ABM2S65G value, using a 5G manufacture test mode over 5G Sub 6 channels for the same band under test.
4. Document in the test report matrix:
   a. Include columns for both ABM2LTE & ABM2S65G for comparison
   b. Establish the S+N1/N2 for the rating
      iv. S+N1 = ABM1LTE (step 1) and
      v. N2 = ABM2S65G (step 2).
      vi. Subtract 3 dB from S+N1/N2
   c. Rating based on (ABM1LTE/ ABM2S65G) -3dB.

Air Interface	BW (MHz)	Modulation	RB Size	RB offset	Channel	Probe Position	(1) ABM1 dB (A/m)	(2) ABM2 dB (A/m)	Signal Quality dB	(3) Signal Quality -3 dB	T Rating	Ambient Noise dB (A/m)	Freq. Response Variation dB
LTE Band 7	20M	QPSK	1	0	21100	Axial (Z)	9.50	-51.02	60.52	-	T4	-50.36	0.99
						Transversal(Y)	0.12	-48.53	48.65	-	T4	-50.21	
FR1 n7	50M	BPSK	1	1	507000	Axial (Z)	9.50	-52.02	61.52	58.52	T4	-50.26	NA
						Transversal(Y)	0.12	-49.66	49.78	46.78	T4	-50.33	

8. Test Equipment List

Manufacturer	Name of Equipment	Type/Model	Serial Number	Calibration	
				Last Cal.	Due Date
SPEAG	Audio Magnetic 1D Field Probe	AM1DV3	3130	Aug. 26, 2022	Aug. 25, 2023
SPEAG	Data Acquisition Electronics	DAE4	1512	Mar. 29, 2022	Mar. 28, 2023
SPEAG	Audio Magnetic Calibration Coil	AMCC	1049	NCR	NCR
SPEAG	Audio Measuring Instrument	AMMI	1041	NCR	NCR
Testo	Hygro meter	608-H1	45196600	Oct. 22, 2021	Oct. 21, 2022
R&S	Wideband Radio Communication Tester	CMW500	115793	Nov. 30, 2021	Nov. 29, 2022
SPEAG	Test Arch Phantom	N/A	N/A	NCR	NCR
SPEAG	Phone Positioner	N/A	N/A	NCR	NCR

Note:

1. NCR: “No-Calibration Required”

9. T-Coil testing for CMRS Voice

General Note:

1. Codec Investigation: For a voice service/air interface, investigate the variations of codec configurations (WB, NB bit rate) and document the parameters (ABM1, ABM2, S+N/N, frequency response) for that voice service. It is only necessary to document this for one channel/band; the following worst investigation codec would be used for the testing for the handset.
2. Air Interface Investigation:
   a. Use the worst-case codec test and document a limited set of bands/channel/bandwidths. Observe the effect of changing the band and bandwidth to ensure that there are no unexpected variations. Using the knowledge of the observed variations, it is necessary to report only a set band/channel/bandwidth for each orientation for a voice service/air interface.
   b. According to the ANSI C63.19 2011 section 7.3.2, test the middle channel of each frequency band for HAC testing for each orientation to determine the worst HAC T-Coil rating.

9.1 GSM Tests Results

<Codec Investigation>

Codec	AMR NB FR	AMR WB FR	GSM EFR (FR V2)	Orientation	Band / Channel
ABM 1 (dBA/m)	3.53	3.68	4.01	Axial	GSM850 / 189
ABM 2 (dBA/m)	-47.13	-46.95	-46.95		
Signal Quality (dB)	50.66	50.63	50.96		
Freq. Response	Pass	Pass	Pass		

<Air Interface Investigation>

Plot No.	Air Interface	Mode	Channel	Probe Position	ABM1 dB (A/m)	ABM2 dB (A/m)	Signal Quality dB	T Rating	Ambient Noise dB (A/m)	Freq. Response Variation dB	Frequency Response
1	GSM850	Voice	189	Axial (Z)	3.68	-46.95	50.63	T4	-50.36	1.8	Pass
				Transversal (Y)	-6.59	-45.52	38.93	T4	-50.29		
2	GSM1900	Voice	661	Axial (Z)	3.34	-50.91	54.25	T4	-50.35	1.85	Pass
				Transversal (Y)	-4.72	-47.57	42.85	T4	-50.27		

9.2 UMTS Tests Results

<Codec Investigation>

Codec	NB AMR 4.75Kbps	WB AMR 6.60Kbps	NB AMR 12.2Kbps	WB AMR 23.85Kbps	Orientation	Band / BW / Channel
ABM 1 (dBA/m)	3.34	2.21	3.71	3.21	Axial	B2 / 9400
ABM 2 (dBA/m)	-51.88	-51.95	-52.02	-51.69		
Signal Quality (dB)	55.22	54.16	55.73	54.9		
Freq. Response	Pass	Pass	Pass	Pass		

<Air Interface Investigation>

Plot No.	Air Interface	Mode	Channel	Probe Position	ABM1 dB (A/m)	ABM2 dB (A/m)	Signal Quality dB	T Rating	Ambient Noise dB (A/m)	Freq. Response Variation dB	Frequency Response
3	WCDMA II	Voice	9400	Axial (Z)	2.21	-51.95	54.16	T4	-50.32	2	Pass
				Transversal (Y)	-5.66	-48.59	42.93	T4	-50.29		
4	WCDMA IV	Voice	1413	Axial (Z)	1.63	-52.15	53.78	T4	-50.33	1.49	Pass
				Transversal (Y)	-6.29	-48.72	42.43	T4	-50.29		
5	WCDMA V	Voice	4182	Axial (Z)	1.52	-52.26	53.78	T4	-50.39	2	Pass
				Transversal (Y)	-6.11	-48.64	42.53	T4	-50.25		

10. T-Coil testing for CMRS IP Voice

10.1 VoLTE Tests Results

General Note:

1. Codec Investigation: For a voice service/air interface, investigate the variations of codec configurations (WB, NB bit rate) and document the parameters (ABM1, ABM2, S+N/N, frequency response) for that voice service. It is only necessary to document this for one channel / band; the following worst-case investigation codec would be used for the testing for the handset.
2. Air Interface Investigation:
   a. Use the worst-case codec test and document a limited set of bands / channel / bandwidths. Observe the effect of changing the band and bandwidth to ensure that there are no unexpected variations. Using the knowledge of the observed variations, it is necessary to report only a set band/channel/bandwidth for each orientation for a voice service/air interface. The following worst configure would be used for the testing for the handset.
   b. Select one LTE FDD / TDD frequency band to do measurement at the worst SNR position. This test was additionally performed with varying the BWs/Modulations/RB size to verify the variation to find out the worst configuration. The observed variation is within 1.5 dB, which is much less than the margin from the rating threshold.
   c. The TDD LTE power class 3 supports uplink-downlink configuration 0 and 6, and power class 2 supports uplink-downlink configuration1 to 5 for this device. An investigation was performed to determine the worst-case uplink-downlink configuration to be used for the testing for the handset.
   d. According to the ANSI C63.19 2011 section 7.3.2, test the middle channel of each frequency band for HAC testing for each orientation to determine the worst HAC T-Coil rating.

<Codec Investigation>

LTE FDD

Codec	NB AMR 4.75Kbps	WB AMR 6.60Kbps	NB AMR 12.2Kbps	WB AMR 23.85Kbps	EVS SWB 9.6Kbps	EVS SWB 128Kbps	EVS WB 5.9Kbps	EVS WB 128Kbps	EVS NB 5.9Kbps	EVS NB 24.4Kbps	Orientation	Band / BW / Channel
ABM 1 (dBA/m)	4.05	3.32	4.32	4.12	5.02	4.66	0.97	4.74	-0.22	4.81	Axial	B25 / 20M / 26340
ABM 2 (dBA/m)	-50.42	-49.88	-50.18	-49.85	-50.24	-49.8	-49.9	-49.87	-49.61	-50.63		
Signal Quality (dB)	54.47	53.2	54.5	53.97	55.26	54.46	50.87	54.61	49.39	55.44		
Freq. Response	Pass	Pass	Pass	Pass	Pass	Pass	Pass	Pass	Pass	Pass		

LTE TDD

Codec	NB AMR 4.75Kbps	WB AMR 6.60Kbps	NB AMR 12.2Kbps	WB AMR 23.85Kbps	EVS SWB 9.6Kbps	EVS SWB 128Kbps	EVS WB 5.9Kbps	EVS WB 128Kbps	EVS NB 5.9Kbps	EVS NB 24.4Kbps	Orientation	Band / BW / Channel
ABM 1 (dBA/m)	3.2	1.93	3.54	3.42	4.17	4.1	-2.25	4.03	-3.01	4.33	Axial	B41 / 20M / 40620
ABM 2 (dBA/m)	-49.03	-48.98	-48.95	-49.08	-48.65	-49.04	-49.02	-48.95	-48.77	-48.86		
Signal Quality (dB)	52.23	50.91	52.49	52.5	52.82	53.14	46.77	52.98	45.76	53.19		
Freq. Response	Pass	Pass	Pass	Pass	Pass	Pass	Pass	Pass	Pass	Pass		

<Air Interface Investigation>

Air Interface		BW (MHz)	Modulation / Mode	RB Size	RB offset	Channel	UL-DL Configuration	ABM1 dB (A/m)	ABM2 dB (A/m)	Signal Quality dB
FDD	LTE B2	20	QPSK	1	0	18900	-	0.68	-49.54	50.22
	LTE B2	20	QPSK	50	0	18900	-	2.27	-49.51	51.78
	LTE B2	20	QPSK	100	0	18900	-	-0.58	-51.00	50.42
	LTE B2	20	16QAM	1	0	18900	-	3.42	-49.64	53.06
	LTE B2	20	64QAM	1	0	18900	-	0.70	-52.42	53.12
	LTE B2	15	QPSK	1	0	18900	-	-0.17	-52.38	52.21
	LTE B2	10	QPSK	1	0	18900	-	0.90	-51.52	52.42
	LTE B2	5	QPSK	1	0	18900	-	-0.16	-51.82	51.66
	LTE B2	3	QPSK	1	0	18900	-	1.73	-51.01	52.74
	LTE B2	1.4	QPSK	1	0	18900	-	-0.07	-52.08	52.01
TDD	LTE B41_PC3	20	QPSK	1	0	40620	0	-2.78	-50.03	47.25
	LTE B41_PC3	20	QPSK	1	0	40620	6	-5.26	-52.82	47.56
	LTE B41_PC2	20	QPSK	1	0	40620	1	-0.12	-50.16	50.04
	LTE B41_PC2	20	QPSK	1	0	40620	2	-3.28	-52.72	49.44
	LTE B41_PC2	20	QPSK	1	0	40620	3	-3.84	-52.16	48.32
	LTE B41_PC2	20	QPSK	1	0	40620	4	-0.61	-51.00	50.39
	LTE B41_PC2	20	QPSK	1	0	40620	5	-4.08	-53.18	49.10

Plot No.	Air Interface	BW (MHz)	Modulation	RB Size	RB offset	Channel	Probe Position	ABM1 dB (A/m)	ABM2 dB (A/m)	Signal Quality dB	T Rating	Ambient Noise dB (A/m)	Freq. Response Variation dB	Frequency Response
6	LTE Band 7	20M	QPSK	1	0	21100	Axial (Z)	-1.37	-49.75	48.38	T4	-50.36	1.73	Pass
							Transversal (Y)	-7.85	-47.48	39.63	T4	-50.28		
7	LTE Band 12	10M	QPSK	1	0	23095	Axial (Z)	-0.01	-49.89	49.88	T4	-50.36	1.16	Pass
							Transversal (Y)	-9.96	-47.18	37.22	T4	-50.26		
8	LTE Band 13	10M	QPSK	1	0	23230	Axial (Z)	-1.30	-50.41	49.11	T4	-50.32	1.49	Pass
							Transversal (Y)	-10.51	-46.78	36.27	T4	-50.29		
9	LTE Band 14	10M	QPSK	1	0	23330	Axial (Z)	-3.53	-50.87	47.34	T4	-50.34	1.52	Pass
							Transversal (Y)	-8.17	-48.49	40.32	T4	-50.30		
10	LTE Band 25	20M	QPSK	1	0	26340	Axial (Z)	4.66	-49.80	54.46	T4	-50.38	1.59	Pass
							Transversal (Y)	-7.28	-47.69	40.41	T4	-50.25		
11	LTE Band 26	15M	QPSK	1	0	26865	Axial (Z)	-1.02	-50.80	49.78	T4	-50.32	1.58	Pass
							Transversal (Y)	-9.08	-48.51	39.43	T4	-50.24		
12	LTE Band 30	10M	QPSK	1	0	27710	Axial (Z)	-1.40	-50.63	49.23	T4	-50.39	1.56	Pass
							Transversal (Y)	-8.49	-48.35	39.86	T4	-50.22		
13	LTE Band 41	20M	QPSK	1	0	40620	Axial (Z)	-3.01	-48.77	45.76	T4	-50.38	1.36	Pass
							Transversal (Y)	-9.72	-45.95	36.23	T4	-50.30		
14	LTE Band 48	20M	QPSK	1	0	55830	Axial (Z)	-2.64	-49.39	46.75	T4	-50.37	1.64	Pass
							Transversal (Y)	-8.37	-45.47	37.10	T4	-50.26		
15	LTE Band 66	20M	QPSK	1	0	132322	Axial (Z)	-3.40	-50.99	47.59	T4	-50.39	1.98	Pass
							Transversal (Y)	-8.64	-48.82	40.18	T4	-50.25		
16	LTE Band 71	20M	QPSK	1	0	133297	Axial (Z)	-2.23	-50.70	48.47	T4	-50.39	1.87	Pass
							Transversal (Y)	-8.37	-48.57	40.20	T4	-50.29		

10.2 VoNR evaluation

General Notes:

1. According to KDB 285076 D03, use the interim procedure for 5G Sub 6 calls that use the same protocol, Codec(s) and reference level as VoLTE over LTE (i.e. -16 dBm0).
2. For LTE, establish the ABM1S65G value by using the ABM1LTE magnetic intensity for an LTE call in the same band as the 5G sub6 band under test.
3. For VoNR, establish the ABM1S65G value by using an IP connection for magnetic intensity for a call in the same band as the 5G sub6 band under test
4. Also note the actual ABM2LTE value and establish an ABM2S65G value, using a 5G manufacture test mode over 5G Sub 6 channels for the same band under test.
5. Document in the test report matrix:
   a. Include columns for both ABM2LTE & ABM2S65G for comparison
   b. Establish the S+N1/N2 for the rating
      i. S+N1 = ABM1LTE (step 1) and
      ii. N2 = ABM2S65G (step 2).
      iii. Subtract 3 dB from S+N1/N2
   c. Rating based on (ABM1LTE/ ABM2S65G) -3dB.

Plot No.	Air Interface	BW (MHz)	Modulation / Mode	RB Size	RB offset	Channel	Probe Position	(1) ABM1 dB (A/m)	(2) ABM2 dB (A/m)	Signal Quality dB	(3) Signal Quality -3 dB	T Rating	Ambient Noise dB (A/m)	Freq. Response Variation dB	Frequency Response
17	LTE Band 26	15M	QPSK	1	0	26865	Axial (Z)	-1.02	-50.80	49.78	-	T4	-50.32	1.58	Pass
							Transversal (Y)	-9.08	-48.51	39.43	-	T4	-50.24		
	FR1 n5	20M	BPSK	1	1	167300	Axial (Z)	-1.02	-51.11	50.09	47.09	T4	-50.33	NA	NA
							Transversal (Y)	-9.08	-49.25	40.17	37.17	T4	-50.21		
18	LTE Band 7	20M	QPSK	1	0	21100	Axial (Z)	-1.37	-49.75	48.38	-	T4	-50.36	1.73	Pass
							Transversal (Y)	-7.85	-47.48	39.63	-	T4	-50.28		
	FR1 n7	20M	BPSK	1	1	507000	Axial (Z)	-1.37	-50.68	49.31	46.31	T4	-50.38	NA	NA
							Transversal (Y)	-7.85	-48.25	40.40	37.40	T4	-50.26		
19	LTE Band 12	10M	QPSK	1	0	23095	Axial (Z)	-0.01	-49.89	49.88	-	T4	-50.36	1.16	Pass
							Transversal (Y)	-9.96	-47.18	37.22	-	T4	-50.26		
	FR1 n12	15M	BPSK	1	1	141500	Axial (Z)	-0.01	-50.22	50.21	47.21	T4	-50.34	NA	NA
							Transversal (Y)	-9.96	-48.73	38.77	35.77	T4	-50.25		
20	LTE Band 14	10M	QPSK	1	0	23330	Axial (Z)	-3.53	-50.87	47.34	-	T4	-50.34	1.52	Pass
							Transversal (Y)	-8.17	-48.49	40.32	-	T4	-50.30		
	FR1 n14	10M	BPSK	1	1	158600	Axial (Z)	-3.53	-51.95	48.42	45.42	T4	-50.31	NA	NA
							Transversal (Y)	-8.17	-49.25	41.08	38.08	T4	-50.33		
21	LTE Band 25	20M	QPSK	1	0	26340	Axial (Z)	4.66	-49.80	54.46	-	T4	-50.38	1.59	Pass
							Transversal (Y)	-7.28	-47.69	40.41	-	T4	-50.25		
	FR1 n25	40M	BPSK	1	1	376500	Axial (Z)	4.66	-51.22	55.88	52.88	T4	-50.37	NA	NA
							Transversal (Y)	-7.28	-48.85	41.57	38.57	T4	-50.22		
22	LTE Band 30	10M	QPSK	1	0	27710	Axial (Z)	-1.40	-50.63	49.23	-	T4	-50.39	1.56	Pass
							Transversal (Y)	-8.49	-48.35	39.86	-	T4	-50.22		
	FR1 n30	10M	BPSK	1	1	462000	Axial (Z)	-1.40	-51.92	50.52	47.52	T4	-50.40	NA	NA
							Transversal (Y)	-8.49	-49.22	40.73	37.73	T4	-50.20		
23	LTE Band 41	20M	QPSK	1	0	40620	Axial (Z)	-3.01	-48.77	45.76	-	T4	-50.38	1.36	Pass
							Transversal (Y)	-9.72	-45.95	36.23	-	T4	-50.30		
	FR1 n41	100M	BPSK	1	1	518598	Axial (Z)	-3.01	-49.85	46.84	43.84	T4	-50.36	NA	NA
							Transversal (Y)	-9.72	-47.22	37.50	34.50	T4	-50.28		
24	LTE Band 48	20M	QPSK	1	0	55830	Axial (Z)	-2.64	-49.39	46.75	-	T4	-50.37	1.64	Pass
							Transversal (Y)	-8.37	-45.47	37.10	-	T4	-50.26		
	FR1 n48	40M	BPSK	1	1	641666	Axial (Z)	-2.64	-51.06	48.42	45.42	T4	-50.34	NA	NA
							Transversal (Y)	-8.37	-46.15	37.78	34.78	T4	-50.25		
25	LTE Band 66	20M	QPSK	1	0	132322	Axial (Z)	-3.40	-50.99	47.59	-	T4	-50.39	1.98	Pass
							Transversal (Y)	-8.64	-48.82	40.18	-	T4	-50.25		
	FR1 n66	40M	BPSK	1	1	349000	Axial (Z)	-3.40	-52.21	48.81	45.81	T4	-50.37	NA	NA
							Transversal (Y)	-8.64	-50.01	41.37	38.37	T4	-50.27		
26	LTE Band 71	20M	QPSK	1	0	133297	Axial (Z)	-2.23	-50.70	48.47	-	T4	-50.39	1.87	Pass
							Transversal (Y)	-8.37	-48.57	40.20	-	T4	-50.29		
	FR1 n71	20M	BPSK	1	1	136100	Axial (Z)	-2.23	-51.16	48.93	45.93	T4	-50.35	NA	NA
							Transversal (Y)	-8.37	-50.22	41.85	38.85	T4	-50.28		
27	LTE Band 48	20M	QPSK	1	0	55830	Axial (Z)	-2.64	-49.39	46.75	-	T4	-50.37	1.64	Pass
							Transversal (Y)	-8.37	-45.47	37.10	-	T4	-50.26		
	FR1 n77	100M	BPSK	1	1	656000	Axial (Z)	-2.64	-48.22	45.58	42.58	T4	-50.33	NA	NA
							Transversal (Y)	-8.37	-46.16	37.79	34.79	T4	-50.24		

10.3 VoWiFi Tests Results

General Note:

1. Codec Investigation: For a voice service/air interface, investigate the variations of codec configurations (WB, NB bit rate) and document the parameters (ABM1, ABM2, S+N/N, frequency response) for that voice service. It is only necessary to document this for one channel/band; the following worst case investigation codec would be used for the testing for the handset.
2. Air Interface Investigation:
   a. Use the worst-case codec test and document a limited set of bands/channel/bandwidths. Observe the effect of changing the band and bandwidth to ensure that there are no unexpected variations. Using the knowledge of the observed variations, it is necessary to report only a set band/channel/bandwidth for each orientation for a voice service/air interface. The following worst configuration would be used for the testing for the handset.
   b. Select one frequency band at WLAN 2.4GHz and WLAN 5GHz to measure the worst SNR position with varying the BWs/Modulations/data rate. This verifies the variation to find out the worst case configuration. The observed variation is within 1 dB, which is much less than the margin from the rating threshold.
   c. According to the ANSI C63.19 2011 section 7.3.2, test the middle channel of each frequency band for HAC testing for each orientation to determine the worst HAC T-Coil rating.

<Codec Investigation>

Codec	NB AMR 4.75Kbps	WB AMR 6.60Kbps	NB AMR 12.2Kbps	WB AMR 23.85Kbps	EVS SWB 9.6Kbps	EVS SWB 128Kbps	EVS WB 5.9Kbps	EVS WB 128Kbps	EVS NB 5.9Kbps	EVS NB 24.4Kbps	Orientation	Band / Channel
ABM 1 (dBA/m)	2.43	0.87	2.72	2.27	4.51	3.54	-2.5	4.3	-3.14	2.61	Axial	2.4GHz WLAN / 6
ABM 2 (dBA/m)	-47.65	-48.07	-47.61	-48.22	-50.92	-46.67	-48.74	-49.96	-47.16	-49.21		
Signal Quality (dB)	50.08	48.94	50.33	50.49	55.43	50.21	46.24	54.26	44.02	51.82		
Freq. Response	Pass	Pass	Pass	Pass	Pass	Pass	Pass	Pass	Pass	Pass		

<Air Interface Investigation>

Frequency Bands	Modulation	Bandwidth	Data Rate	Channel	ABM1 dB (A/m)	ABM2 dB (A/m)	Signal Quality dB
WLAN 2.4GHz	802.11b	20	1M	6	-3.33	-46.55	43.22
	802.11b	20	11M	6	-1.33	-46.51	45.18
	802.11g	20	6M	6	-3.72	-48.49	44.77
	802.11g	20	54M	6	-1.67	-48.00	46.33
	802.11n-HT20	20	MCS0	6	-4.50	-49.58	45.08
	802.11n-HT20	20	MCS7	6	-3.68	-48.42	44.74
	802.11ac-VHT20	20	MCS0	6	-3.39	-46.98	43.59
	802.11ac-VHT20	20	MCS8	6	-2.38	-46.86	44.48
	802.11ax-HE20	20	MCS0	6	-2.37	-47.06	44.69
	802.11ax-HE20	20	MCS11	6	-3.66	-47.93	44.27
WLAN 5GHz	802.11a	20	6M	40	-2.85	-49.07	46.22
	802.11a	20	54M	40	-1.97	-48.98	47.01
	802.11an-HT20	20	MCS0	40	-2.77	-49.85	47.08
	802.11an-HT20	20	MCS7	40	-1.05	-49.91	48.86
	802.11an-HT40	40	MCS0	38	-2.46	-51.78	49.32
	802.11an-HT40	40	MCS7	38	-3.22	-52.11	48.89
	802.11ac-VHT20	20	MCS0	40	-3.37	-51.67	48.30
	802.11ac-VHT20	20	MCS8	40	-4.44	-51.22	46.78
	802.11ac-VHT40	40	MCS0	38	-0.03	-49.58	49.55
	802.11ac-VHT40	40	MCS8	38	-4.54	-52.41	47.87
	802.11ac-VHT80	80	MCS0	58	-2.80	-50.66	47.86
	802.11ac-VHT80	80	MCS8	58	-2.42	-50.64	48.22
	802.11ax-HE20	20	MCS0	40	-3.05	-50.58	47.53
	802.11ax-HE20	20	MCS11	40	-1.93	-49.07	47.14
	802.11ax-HE40	40	MCS0	38	-2.14	-49.99	47.85
	802.11ax-HE40	40	MCS11	38	-3.28	-50.70	47.42
	802.11ax-HE80	80	MCS0	58	-1.48	-50.27	48.79
	802.11ax-HE80	80	MCS11	58	-4.00	-51.64	47.64

Plot No.	Air Interface	Modulation	Channel	Transmit Antenna	Probe Position	ABM1 dB (A/m)	ABM2 dB (A/m)	Signal Quality dB	T Rating	Ambient Noise dB (A/m)	Freq. Response Variation dB	Frequency Response
28	WLAN2.4GHz	802.11b 1Mbps	6	Ant 4+3	Axial (Z)	-3.14	-47.16	44.02	T4	-50.34	1.65	Pass
					Transversal (Y)	-9.10	-47.63	38.53	T4	-50.30		
29	WLAN5GHz	802.11a 6Mbps	40	Ant 4+3	Axial (Z)	-2.73	-48.89	46.16	T4	-50.32	1.72	Pass
					Transversal (Y)	-9.30	-47.49	38.19	T4	-50.23		
30	WLAN5GHz	802.11a 6Mbps	60	Ant 4+3	Axial (Z)	0.25	-49.25	49.50	T4	-50.37	1.72	Pass
					Transversal (Y)	-7.92	-46.68	38.76	T4	-50.22		
31	WLAN5GHz	802.11a 6Mbps	124	Ant 4+3	Axial (Z)	-0.55	-48.94	48.39	T4	-50.33	1.58	Pass
					Transversal (Y)	-6.62	-46.31	39.69	T4	-50.30		
32	WLAN5GHz	802.11a 6Mbps	157	Ant 4+3	Axial (Z)	-2.15	-49.39	47.24	T4	-50.40	1.95	Pass
					Transversal (Y)	-7.03	-46.57	39.54	T4	-50.24		
33	WLAN5GHz	802.11a 6Mbps	173	Ant 4+3	Axial (Z)	2.39	-49.33	51.72	T4	-50.35	2	Pass
					Transversal (Y)	-7.51	-46.45	38.94	T4	-50.28		

11. T-Coil testing for OTT Voice Calling

General Notes:

1. According to the ANSI C63.19 2011 section 7.3.2, for HAC testing, test the middle channel of each frequency band for each orientation to determine the worst HAC T-Coil rating.
2. The device supported a pre-installed application, Google Meet, whose features allow the option of voice-only communications. According to KDB 285076 D02, all air interfaces via a data connection with an application providing voice functionality must be considered for HAC testing.
3. Google Meet only supports OPUS audio codec with 6Kbps to 75Kbps bitrate.
4. The test setup used for an OTT voice call is the DUT connected to the CMW500. Via the data application unit on CMW500 connection to the Internet, the Auxiliary EUT is connected to the WiFi access point, and the channel/Modulation/Frequency bands/data rate is configured on the CMW500 for the DUT unit. The Auxiliary OTT unit is used to configure the audio codec rate and determine the audio input level of -20dBm0 based on the KDB 285076 D02v03 requirement.
5. Codec Investigation: For a voice service/air interface, investigate the variations of codec configurations (WB, NB bit rate) and document the parameters (ABM1, ABM2, S+N/N, frequency response) for that voice service. It is only necessary to document this for one channel/band; the following test results determine the worst case codec to be used for the testing for the handset.
6. Air Interface Investigation:
   a. Use the worst-case codec test and document a limited set of bands/channel/bandwidths. Observe the effect of changing the band and bandwidth to ensure that there are no unexpected variations. Using the knowledge of the observed variations, it is necessary to report only a set band/channel/bandwidth for each orientation for a voice service/air interface.
   b. OTT service and CMRS IP service are established over the internet protocol for the voice service, and on both services the identical RF air interface is used for WIFI and LTE. Therefore according to VoLTE and VoWiFi test results from the air interface investigation, the worst configuration and frequency band of the air interface is used for OTT T-Coil testing.
   -LTE FDD worst configuration and band: LTE Band 13/10MHz/QPSK/1RB Size
   -LTE TDD worst configuration and band: LTE Band 41/20MHz/QPSK/1RB Size
   -WLAN2.4GHz Ant 4+3 worst configuration: 802.11b/1Mbps
   -WLAN5GHz Ant 4+3 worst configuration and Band: WLAN 5.2GHz/11a/6Mbps

<Codec Investigation>

EDGE

Codec	OPUS Bitrate 6Kbps	OPUS Bitrate 40Kbps	OPUS Bitrate 75Kbps	Orientation	Band / Channel
ABM 1 (dBA/m)	5.75	4.69	0.03	Axial	GSM850 / 189
ABM 2 (dBA/m)	-48.41	-48.78	-48.01		
Signal Quality (dB)	54.16	53.47	48.04		
Freq. Response	Pass	Pass	Pass		

HSPA

Codec	OPUS Bitrate 6Kbps	OPUS Bitrate 40Kbps	OPUS Bitrate 75Kbps	Orientation	Band / Channel
ABM 1 (dBA/m)	6.47	7.08	7.03	Axial	UMTS B2 / 9400
ABM 2 (dBA/m)	-51.67	-50.95	-51.16		
Signal Quality (dB)	58.14	58.03	58.19		
Freq. Response	Pass	Pass	Pass		

LTE FDD

Codec	OPUS Bitrate 6Kbps	OPUS Bitrate 40Kbps	OPUS Bitrate 75Kbps	Orientation	Band / BW / Channel
ABM 1 (dBA/m)	6.63	7.1	7.65	Axial	B25 / 20M / 26340
ABM 2 (dBA/m)	-52.43	-51.81	-51.55		
Signal Quality (dB)	59.06	58.91	59.2		
Freq. Response	Pass	Pass	Pass		

LTE TDD

Codec	OPUS Bitrate 6Kbps	OPUS Bitrate 40Kbps	OPUS Bitrate 75Kbps	Orientation	Band / BW / Channel
ABM 1 (dBA/m)	6.88	7.14	7.36	Axial	B41 / 20M / 40620
ABM 2 (dBA/m)	-49.11	-48.38	-48.22		
Signal Quality (dB)	55.99	55.52	55.58		
Freq. Response	Pass	Pass	Pass		

WLAN

Codec	OPUS Bitrate 6Kbps	OPUS Bitrate 40Kbps	OPUS Bitrate 75Kbps	Orientation	Band / Channel
ABM 1 (dBA/m)	5.67	5.96	6.09	Axial	WLAN2.4G / 6
ABM 2 (dBA/m)	-44.86	-45.07	-45.07		
Signal Quality (dB)	50.53	51.03	51.16		
Freq. Response	Pass	Pass	Pass		

Plot No.	Air Interface	Mode	Channel	Ant Status	Probe Position	ABM1 dB (A/m)	ABM2 dB (A/m)	Signal Quality dB	T Rating	Ambient Noise dB (A/m)	Freq. Response Variation dB	Frequency Response
34	GSM850	EDGE 2 Tx slots	189	-	Axial (Z)	0.03	-48.01	48.04	T4	-50.37	1.43	Pass
					Transversal (Y)	-5.63	-43.08	37.45	T4	-50.24		
35	GSM1900	EDGE 2 Tx slots	661	-	Axial (Z)	-7.77	-47.98	40.21	T4	-50.34	1.67	Pass
					Transversal (Y)	-10.21	-45.72	35.51	T4	-50.24		
36	WCDMA II	HSPA	9400	-	Axial (Z)	7.08	-50.95	58.03	T4	-50.34	1.6	Pass
					Transversal (Y)	-0.98	-48.05	47.07	T4	-50.29		
37	WCDMA IV	HSPA	1413	-	Axial (Z)	6.68	-51.58	58.26	T4	-50.36	1.71	Pass
					Transversal (Y)	-2.10	-49.02	46.92	T4	-50.24		
38	WCDMA V	HSPA	4182	-	Axial (Z)	6.48	-51.49	57.97	T4	-50.38	1.72	Pass
					Transversal (Y)	-1.66	-48.13	46.47	T4	-50.23		
39	LTE Band 13	10M_QPSK_1_0	23230	-	Axial (Z)	7.57	-51.69	59.26	T4	-50.40	0.79	Pass
					Transversal (Y)	-0.74	-48.38	47.64	T4	-50.27		
40	LTE Band 41	20M_QPSK_1_0	40620	-	Axial (Z)	7.14	-48.38	55.52	T4	-50.38	1.44	Pass
					Transversal (Y)	-1.80	-45.76	43.96	T4	-50.24		
41	WLAN2.4GHz	802.11b 1Mbps	6	Ant 4+3	Axial (Z)	5.67	-44.86	50.53	T4	-50.37	1.66	Pass
					Transversal (Y)	-1.18	-46.01	44.83	T4	-50.23		
42	WLAN5GHz	802.11a 6Mbps	40	Ant 4+3	Axial (Z)	7.22	-48.80	56.02	T4	-50.40	0.87	Pass
					Transversal (Y)	-1.44	-46.58	45.14	T4	-50.29		

11.15G FR1 OTT evaluation

General Notes:

1. According to KDB 285076 D03, for 5G Sub 6 calls that use the same protocol, Codec(s) and reference level as OTT voice calling applications (such as Meet or AppleTalk), the tests are as follows.
2. For LTE, establish the ABM1S65G value by using the ABM1LTE magnetic intensity for an LTE call in the same band as the 5G sub6 band under test.
3. For OTT, establish the ABM1S65G value by using an IP connection for magnetic intensity for a call in the same band as the 5G sub6 band under test as ABM1OTT LTE value.
4. Also note the actual ABM2LTE/OTT value and establish an ABM2S65G value, using a 5G manufacture test mode over 5G Sub 6 channels for the same band under test.
5. Document in the test report matrix:
   a. Include columns for both ABM2LTE & ABM2S65G for comparison
   b. Establish the S+N1/N2 for the rating
      i. S+N1 = ABM1LTE (step 1) and
      ii. N2 = ABM2S65G (step 2).
      iii. Subtract 3 dB from S+N1/N2
   c. Rating based on (ABM1LTE/ ABM2S65G) -3dB.
6. OTT service and CMRS IP service are established over the internet protocol for the voice service, and on both services the identical RF air interface is used for NR. Therefore according to VoNR test results from the air interface investigation, the worst configuration and frequency band of the air interface is used for OTT T-Coil testing.
   -NR FDD worst configuration and band: NR n12/15MHz/BPSK/1RB Size
   -NR TDD worst configuration and band: NR n41/100MHz/BPSK/1RB Size

Plot No.	Air Interface	BW (MHz)	Modulation / Mode	RB Size	RB offset	Channel	Probe Position	(1) ABM1 dB (A/m)	(2) ABM2 dB (A/m)	Signal Quality dB	(3) Signal Quality -3 dB	T Rating	Ambient Noise dB (A/m)	Freq. Response Variation dB	Frequency Response
43	LTE Band 12	10M	QPSK	1	0	23095	Axial (Z)	7.44	-51.75	59.19	-	T4	-50.32	1.13	Pass
							Transversal (Y)	-0.30	-48.00	47.70	-	T4	-50.22		
	FR1 n12	15M	BPSK	1	1	141500	Axial (Z)	7.44	-52.19	59.63	56.63	T4	-50.34	NA	NA
							Transversal (Y)	-0.30	-49.93	49.63	46.63	T4	-50.21		
44	LTE Band 41	20M	QPSK	1	0	40620	Axial (Z)	7.14	-48.38	55.52	-	T4	-50.38	1.44	Pass
							Transversal (Y)	-1.80	-45.76	43.96	-	T4	-50.24		
	FR1 n41	100M	BPSK	1	1	518598	Axial (Z)	7.14	-49.85	56.99	53.99	T4	-50.37	NA	NA
							Transversal (Y)	-1.80	-47.21	45.41	42.41	T4	-50.23		

Remark:

1. Phone Condition: Mute on; Backlight off; Max Volume
2. The detail frequency response results please refer to appendix A.
3. Hearing Aid mode (Phone -> Setting ->Accessibility->Hearing aids) was set to on for improving the Audio signal performance for HAC T-Coil compliance.
4. Test Engineer：Carter Jhuang, Ken Lin and EN Liu

12. Uncertainty Assessment

The evaluation of uncertainty by the statistical analysis of a series of observations is termed a Type A evaluation of uncertainty. The evaluation of uncertainty by means other than the statistical analysis of a series of observations is termed a Type B evaluation of uncertainty. Each component of uncertainty, however evaluated, is represented by an estimated standard deviation, termed standard uncertainty, which is determined by the positive square root of the estimated variance. The combined standard uncertainty of the measurement result represents the estimated standard deviation of the result. It is obtained by combining the individual standard uncertainties of both Type A and Type B evaluation using the usual "root-sum-squares" (RSS) methods of combining standard deviations by taking the positive square root of the estimated variances. Expanded uncertainty is a measure of uncertainty that defines an interval about the measurement result within which the measured value is confidently believed to lie. It is obtained by multiplying the combined standard uncertainty by a coverage factor. For the purpose of this document, a coverage factor two is used, which corresponds to a confidence interval of about 95%. The DASY uncertainty Budget is showed in Table 8.2.
The judgment of conformity in the report is based on the measurement results excluding the measurement uncertainty.

Error Description	Uncertainty Value (±%)	Probability Distribution	Divisor	Ci (ABM1)	Ci (ABM2)	Standard Uncertainty (ABM1)	Standard Uncertainty (ABM2)
Probe Sensitivity							
Reference Level	3.0	Normal	1	1	1	± 3.0 %	± 3.0 %
AMCC Geometry	0.4	Rectangular	√3	1	1	± 0.2 %	± 0.2 %
AMCC Current	1.0	Rectangular	√3	1	1	± 0.6 %	± 0.6 %
Probe Positioning During Calibrate	0.1	Rectangular	√3	1	1	± 0.1 %	± 0.1 %
Noise Contribution	0.7	Rectangular	√3	0.0143	1	± 0.0 %	± 0.4 %
Frequency Slope	5.9	Rectangular	√3	0.1	1	± 0.3 %	± 3.5 %
Probe System							
Repeatability / Drift	1.0	Rectangular	√3	1	1	± 0.6 %	± 0.6 %
Linearity / Dynamic Range	0.6	Rectangular	√3	1	1	± 0.4 %	± 0.4 %
Acoustic Noise	1.0	Rectangular	√3	0.1	1	± 0.1 %	± 0.6 %
Probe Angle	2.3	Rectangular	√3	1	1	± 1.4 %	± 1.4 %
Spectral Processing	0.9	Rectangular	√3	1	1	± 0.5 %	± 0.5 %
Integration Time	0.6	Normal	1	1	5	± 0.6 %	± 3.0 %
Field Disturbation	0.2	Rectangular	√3	1	1	± 0.1 %	± 0.1 %
Test Signal							
Reference Signal Spectral Response	0.6	Rectangular	√3	0	1	± 0.0 %	± 0.4 %
Positioning							
Probe Positioning	1.9	Rectangular	√3	1	1	± 1.1 %	± 1.1 %
Phantom Thickness	0.9	Rectangular	√3	1	1	± 0.5 %	± 0.5 %
EUT Positioning	1.9	Rectangular	√3	1	1	± 1.1 %	± 1.1 %
External Contributions							
RF Interference	0.0	Rectangular	√3	1	0.3	± 0.0 %	± 0.0 %
Test Signal Variation	2.0	Rectangular	√3	1	1	± 1.2 %	± 1.2 %
Combined Standard Uncertainty						± 4.1 %	± 6.1 %
Coverage Factor for 95 %						K = 2	
Expanded Uncertainty						± 8.1 %	± 12.3 %
Declaration of Conformity: The test results with all measurement uncertainty excluded are presented in accordance with the regulation limits or requirements declared by manufacturers.							
Comments and Explanations: The declared product specification for EUT presented in the report is provided by the manufacturer, and the manufacturer takes all the responsibilities for the accuracy of product specification.							

Uncertainty Budget of audio band magnetic measurement

13. References

[1] ANSI C63.19-2011, “American National Standard for Methods of Measurement of Compatibility between Wireless Communications Devices and Hearing Aids”, 27 May 2011.

[2] FCC KDB 285076 D01v06r02, “Equipment Authorization Guidance for Hearing Aid Compatibility”, Sep. 2022.

[3] FCC KDB 285076 D02v04, “Guidance for performing T-Coil tests for air interfaces supporting voice over IP (e.g., LTE and WiFi) to support CMRS based telephone services”, Feb 2022

[4] FCC KDB 285076 D03v01r06, “Hearing aid compatibility frequently asked questions”, Jul. 2022

[5] SPEAG DASY System Handbook