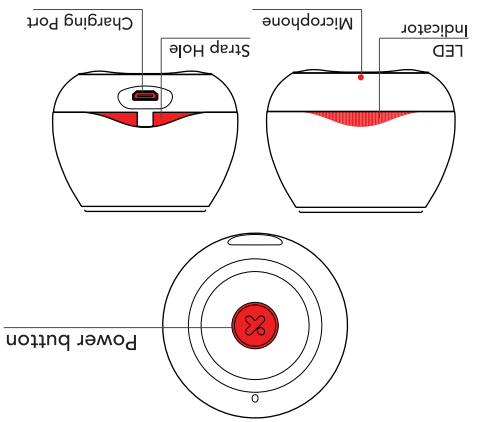

CLICK 3 QUICK USER GUIDE

x-mini.com

Copyright© 2019, Xmi Pte Ltd. All rights reserved.
The name "X-mini", "Capsule Speaker" and "X-mini logo" are trademarks or registered trademarks of Xmi Pte Ltd. This product is covered by patents/patents pending and are property of Xmi Pte Ltd.

*For more detailed user manual, please visit our website for more information.
x-mini.com

Product name: CLICK 3 QSG (Front)
Release date: 12 Jul 2019

Open size: 70mm x 140mm
Printing: 4C x 4C
Material: 105gsm White Art Paper
Finishing: Matte Lamination + Cut to size + Form to size

Legend

Folding Line

Die Line

Getting started ....

1 Power On + Pairing Mode

✖ Press and hold button until power on prompt sound is heard.

2 Connect to Device

✖ Switch on the Bluetooth on your device and search for "X-mini CLICK 3". The connected prompt sound is heard once paired successfully

3 Camera SHUTTER Function

✖ Launch your device's Camera App. Double press "Power Button" to take a picture.

4 Stereo Mode

✖ Power on both CLICK 3. Double press "Power Button" on either speaker to initiate Stereo Pairing. Connected prompts are heard once the speakers are paired successfully.

* Make sure you OFF your Bluethooth on your Device.
* You only need to pair once. Subsequently speakers will auto Stereo Pair once power on.

Product name: CLICK 3 QSG (Back)
Release date: 12 Jul 2019

Open size: 70mm x 140mm
Printing: 4C x 4C
Material: 105gsm White Art Paper
Finishing: Matte Lamination + Cut to size + Form to size

Legend

Folding Line

Die Line

X·MINI

THE X-MINI™

CLICK 3

BIG SOUND, FUN SIZE

USER MANUAL | **ULTRA PORTABLE BLUETOOTH SPEAKER**

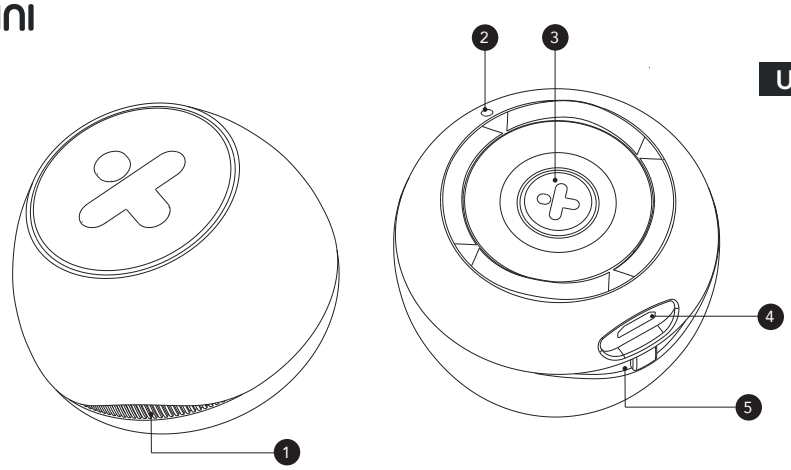

1. LED Indicator
2. Microphone
3. Power Button
4. Micro USB Charging Port
5. Strap Hole

BASIC FUNCTIONS OF POWER BUTTTON

Power On and Pairing

1. Press and hold power button until power on prompt sound is heard.
2. Switch on the Bluetooth on your device and search for "CLICK 3". The connected prompt sound is heard once paired successfuly.

Stereo Mode Pairing

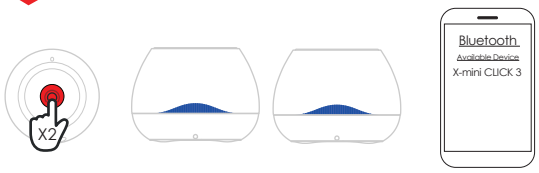

1. Power on both CLICK 3. Double press power button on either speaker to initiate Stereo Pairing. Connected prompts are heard once the speakers are paired successfully.
2. Switch on the Bluetooth on your device and search for "CLICK 3". The connected prompt sound is heard once paired successfuly.

Note:
1. Make sure you OFF your Bluethooth on your Device before pairing.
2. You only need to pair once. Subsequently speakers will auto Stereo Pair once power on.
3. Double press power button on either speaker to disconnect TWS.
4. Speaker will turn off automatically when disconnected and idle for 5 min.

Power Off

Press and hold power button until power off prompt sound is heard.

Camera Shutter

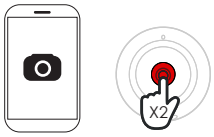

Launch your device's Camera App. Press power button **TWICE** to take a picture

Microphone

Press power button **ONCE** to answer/end call

Play / Pause

Press power button **ONCE** to play or pause.

Disconnect TWS

Press power button **TWICE** to disconnect TWS.

LED INDICATION

1. Fast blinking blue: Pairing mode/Incoming call/TWS
2. Slow blinking blue: Connected

Solid red: Charging

Off: Full charged

BATTERY INFORMATION

1. This product is built-in with non-removeable, rechargeable Lithium ion polymer battery. Please use the bundle micro-USB to charge the product.
2. Don't use a charger with current more than 5V/1A to charge the product.
3. Please full charge the product before initial usage.
4. Use an authorized charger to charge the product. Using unathorized charger may demage the product.
5. Repeated charging the product will cause battery performance degradation over time.

LIMITED WARRANTY

1. If this product or any part thereof is proven to be defective by reason of faulty work faulty workmanship or defects in materials within 12 months of purchase, we will at our option repair or replace the product free of charge, on condition that the original invoice or sales receipt with the date of purchase, or stamp from the dealer is presented together with the defective unit.
2. The warranty does not cover product failures which have been caused by use of accessories or other peripheral devices are not original X-mini™ branded accessories intended for use with the product.
3. The warranty does not cover product failures caused by modifications, repairs and disassembly by any person who is not authorised by the manufacturer.
4. Any defective unit or part shall become property of the manufacturer. The warranty does not cover any damage caused by misuse, drop, hit or neglect.

FCC Caution.

This device complies with part 15 of the FCC Rules. Operation is subject to the following two conditions:
(1) This device may not cause harmful interference, and
(2) this device must accept any interference received, including interference that may cause undesired operation.

Any Changes or modifications not expressly approved by the party responsible for compliance could void the user's authority to operate the equipment.

Note: This equipment has been tested and found to comply with the limits for a Class B digital device, pursuant to part 15 of the FCC Rules. These limits are designed to provide reasonable protection against harmful interference in a residential installation. This equipment generates uses and can radiate radio frequency energy and, if not installed and used in accordance with the instructions, may cause harmful interference to radio communications. However, there is no guarantee that interference will not occur in a particular installation. If this equipment does cause harmful interference to radio or television reception, which can be determined by turning the equipment off and on, the user is encouraged to try to correct the interference by one or more of the following measures:
-Reorient or relocate the receiving antenna.
-Increase the separation between the equipment and receiver.
-Connect the equipment into an outlet on a circuit different from that to which the receiver is connected.
-Consult the dealer or an experienced radio/TV technician for help.

The device has been evaluated to meet general RF exposure requirement. The device can be used in portable exposure condition without restriction.