Dongguan Songhui Co., LTD

SPECIFICATION FOR APPROVAL

File No. 2024071601

Revision 1.0

客　　戶 CUSTOMER: CE LINK LIMITED

客 戶 料 号 CUSTOMER NO: IPC-13LS

品　　名 PART NAME: FPC WIFI Antenna 1.13Black MHF1 L=103MM

供 方 料 号 SUPPLIER NO: **SL308P.300004.P01**

Date:　　Q'TY:　　PCS

CUSTOMER APPROVED BY		
APPROVAL	CHIEF	SUPERVISOR

SUPPLIER SIGNATURE		
APPROVAL	CHECK	DESIGN
sunny	**ZouJie**	**LuoYi**

SH-RD-F04-A

add：24 Ju Xiang er Lu, Xiang Wei cun, :Dalang Town, Dongguan

Telephone;0769-82226176　　Fax; 0769-82226175

Item list of the acknowledgement

NO.	内 容 （Contents）	页 数 （Number of Page）	页 码 （Page Code）
1	Spec Cover	1	1
2	Spec Item	1	2
3	Drawing	1	3
4	Test Reports	1	4
5	S Parameter	1	5
6	Gain Test	1	6
7			
8			
9	-	-	-
10	-	-	-
11	-	-	-
12	-	-	-

add：24 Ju Xiang er Lu, Xiang Wei cun, Dalang Town, Dongguan
Telephone;0769-82226176 Fax; 0769-82226175

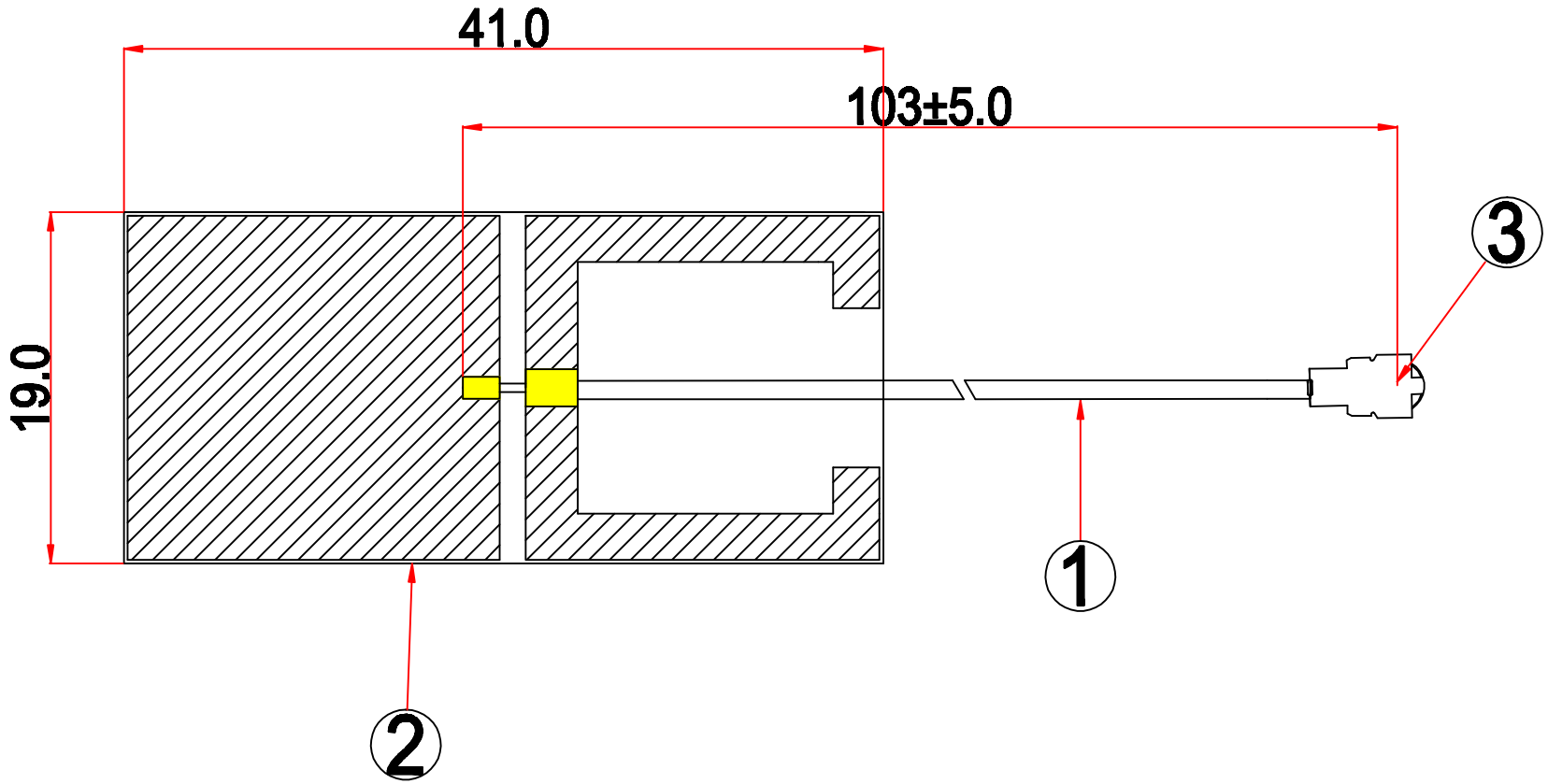

NO	PART NAME	DESCRIPTION	Q.TY
3	IPEX	O.D.1.13	1
2	FPC	41.0*19.0mm	1
1	Coaxial Cable	O.D.1.13 BLACK	1

Dongguan SongHui Co.,Ltd.

CUSTOMER	IPC-13LS		
PART NO			
TITLE	2.4GHzAntenna L=103mm		
S.H P/NO	SL308P.300004.P01		
SIZE	DRAWED	CHECKED	APPROVED
A4	LUOYI	ZOUJIE	

TOLERANCE UNLESS OTHERWISE SPECIFIED

UNIT:mm	ANGLES ±0.5°	X. ±2.0
SHEET: 1/1	X.XX ±0.2	XX. ±5.0
SCALE: 1/1	X.X ±0.5	DATE:2024-07-16

Test Reports

Electrical Properties	
Frequency	2400-2500MHz
Impedance	50 0hm Nominal
V.S.W.R	1.92 : 1 Max
Return Loss	-10 dB Max
Radiation	Omni-directional
Gain (Peak)	2.86dBi Max
Efficiency	>70%
Polarization	Linear, Vertical
Admitted Power	1 W
Connector	MHF1
Physical Properties	
Antenna Material	PCB
Cable Type	O.D. 1.13mm // L=103mm
Operating Temp.	-10 ~ +60 ˚C
Storage Temp.	-10 ~ +70 ˚C
Cable Color	Black

add：24 Ju Xiang er Lu, Xiang Wei cun, Dalang Town, Dongguan
Telephone;0769-82226176 Fax; 0769-82226175

S Parameter Test

Agilent E5071C

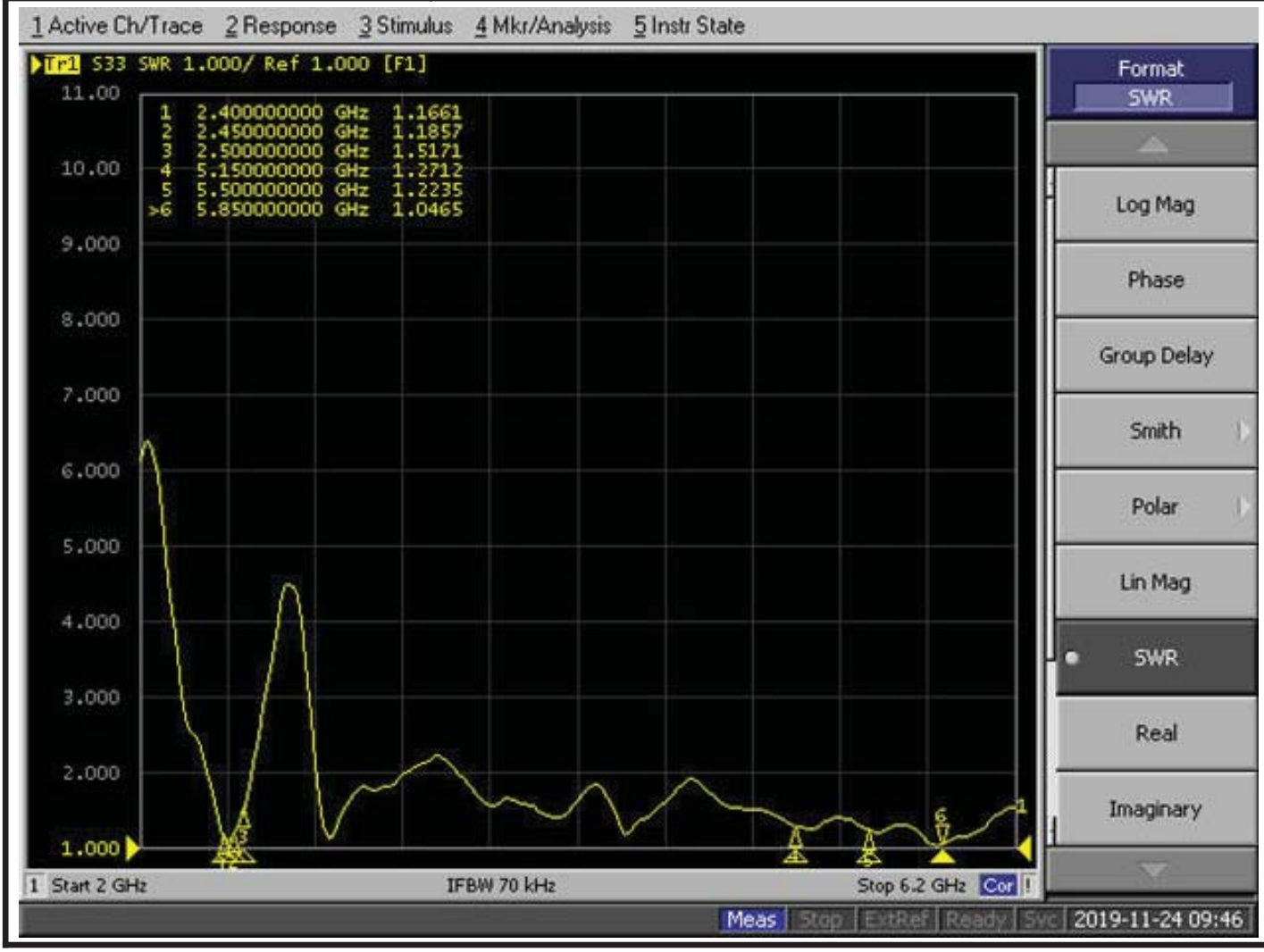

add：24 Ju Xiang er Lu, Xiang Wei cun, Dalang Town, Dongguan
Telephone;0769-82226176 Fax; 0769-82226175

Gain, Efficiency
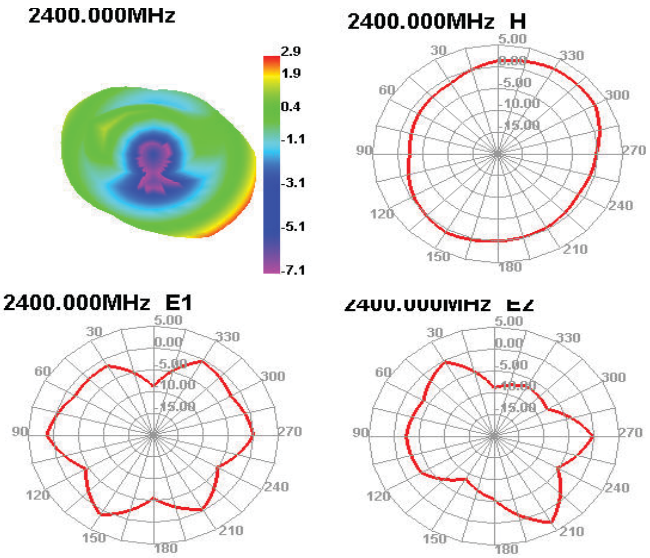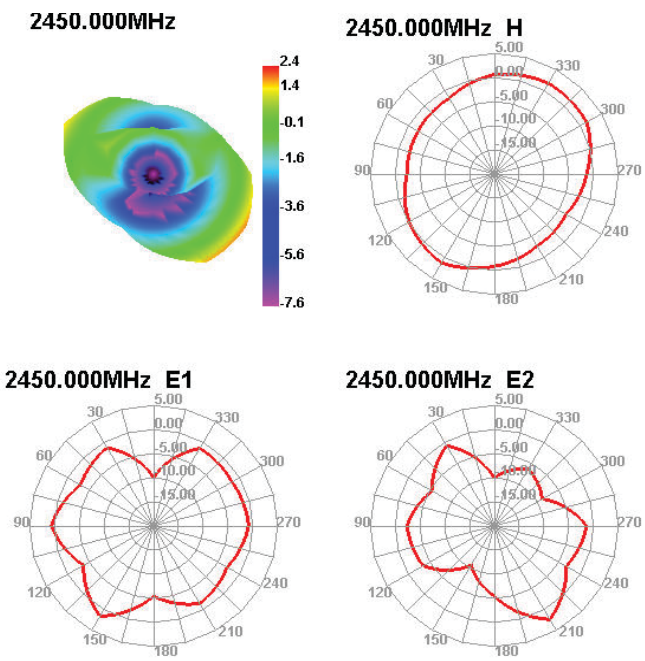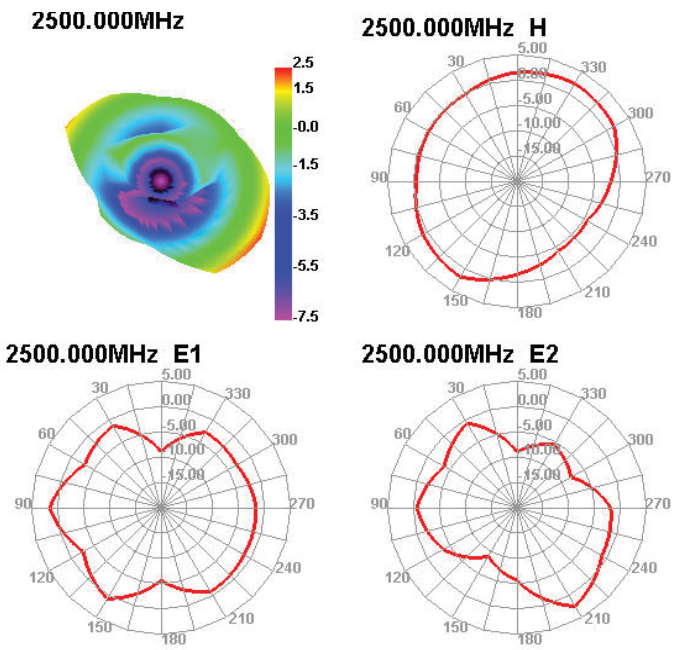
Freq (MHz)	Effi (%)	Effi (dB)
2400	68.93	2.86
2410	76.58	2.83
2420	71.23	2.85
2430	68.68	2.82
2440	66.67	2.54
2450	65.09	2.38
2460	71.02	2.86
2470	68.59	2.64
2480	66.95	2.45
2490	62.69	2.35
2500	70.1	2.46