HUBSAN®

INSTRUCTION MANUAL

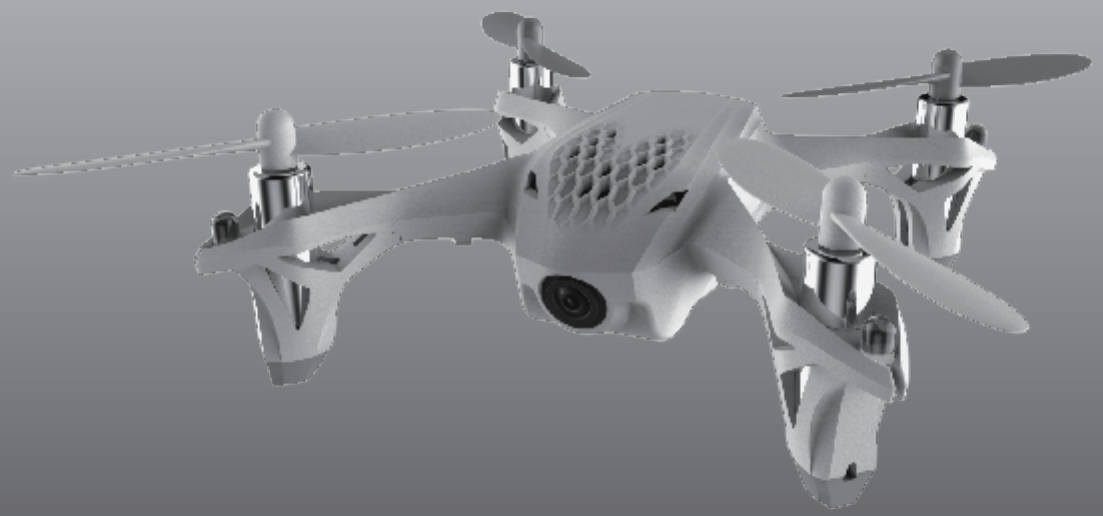

H107D-A05 Transmitter

H107D X4 FPV mini quadcopter

THE HUBSAN X4

FLYING INDOOR AND OUTDOOR

2.4GHZ RC SERIES 4 CHANNEL

1 INTRODUCTION

Thank you for buying HUBSAN products. The quadcopter is designed as an easy to use, full featured RC model capable of hovering, fast forward, and aerobatic flight manoeuvres. Please read the manual carefully and follow all instructions in this. Be sure to retain the manual for future reference, routine maintenance, and tuning.

1.1 Important Notes

This RC quadcopter is not a toy, it utilizes various high-techs to provide superior performance.

Please read this manual carefully before operating this product. Any improper use of this product will result in serious injury. Be aware of your personal safety, safety of others and your surrounding environment.

We recommend that you obtain the assistance of an experienced pilot before attempting to fly our product for the first time.

2 SAFETY NOTES

2.1 Caution

R/C quadcopter have parts that move at high speed, thus posing a certain degree of danger. Pilots are responsible for any actions resulting in damage or injury from the improper operation of their R/C aircraft models.

Choose a wide open space without obstacles. Do not operate R/C aircraft near buildings, crowds of people, high voltage cables, or trees to ensure the safety of yourself, others and your model.

Operate this unit within your ability. Do not fly when tired or after drinking or when impaired by medication. Improper operation may cause damage to people and property.

2.2 LiPo Battery Recharging

Your quadcopter is powered by a Lithium-Polymer (LiPo) battery.

Never recharge your battery whilst it is inserted in your model. It can catch fire leading to the total destruction of the item.

If you do not plan to fly your model for a week or more, store the battery approximately 50% charged to maintain battery performance and life. To achieve a 50% charge, fly the model until the battery requires recharging. Charge the battery for half the time typically required to fully charge the battery.

SAFETY ADVISORY NOTICE

[Lithium-Polymer (LiPo) Batteries]

LiPo batteries are differ from conventional batteries in that their chemical contents are encased in a relatively insubstantial foil packaging. This has the advantage of significantly reducing their weight, but does make them more susceptible to damage if roughly or inappropriately handled. As with all batteries, there is a risk of fire or explosion if safety practices are ignored:

- ☑ Charge and store LiPo batteries in a location where a battery fire or explosion (including smoke hazard) will not endanger life or property.
- ☑ Keep LiPo batteries away from children and animals.
- ☑ Consider how you would deal with a LiPo battery fire/explosion as part of your normal home Fire Safety & Evacuation Planning.
- ☑ Never charge the LiPo battery that has ballooned or swelled due to over-/under-charging or from a crash.
- ☑ Never charge the LiPo battery that has been punctured or damaged in a crash (After a crash, inspect the battery pack for the sign of damage. Discard in accordance with your country's recycling laws.).
- ☑ Never charge the LiPo battery in a moving vehicle.
- ☑ Never over charge the LiPo battery.
- ☑ Never leave the LiPo battery unattended during recharging.
- ☑ Do not charge LiPo batteries near flammable materials or liquids.
- ☑ Ensure that charging leads are connected correctly. Reverse polarity charging can lead to battery damage or a fire or explosion.
- ☑ Have a suitable fire extinguisher(electrical type) OR a large bucket of dry sand near the charging area . Do not try to extinguish electrical (LiPo) battery fires with water.
- ☑ Reduce risks from fire/explosion by storing and charging LiPo batteries inside a suitable container: a LiPo Sack or metal/ceramic container is advised.
- ☑ Monitor recharging LiPo batteries for signs of overheating.
- ☑ Protect your LiPo battery from accidental damage during storage and transportation. (Do not put battery packs in pockets or bags where they can short circuit or can come into contact with sharp or metallic objects.).
- ☑ If your LiPo battery is subjected to a shock (such as a helicopter crash) you should place it in a metal container and observe for signs of swelling or heating for at least 30 minutes.
- ☑ Do not attempt to disassemble or modify or repair the LiPo battery.

FCC Warning:

This equipment has been tested and found to comply with the limits for a Class B digital device, pursuant to part 15 of the FCC Rules. These limits are designed to provide reasonable protection against harmful interference in a residential installation. This equipment generates, uses and can radiate radio frequency energy and, if not installed and used in accordance with the instructions, may cause harmful interference to radio communications. However, there is no guarantee that interference will not occur in a particular installation. If this equipment does cause harmful interference to radio or television reception, which can be determined by turning the equipment off and on, the user is encouraged to try to correct the interference by one or more of the following measures:

--- Reorient or relocate the receiving antenna.

--- Increase the separation between the equipment and receiver.

--- Connect the equipment into an outlet on a circuit different from that to which the receiver is connected.

--- Consult the dealer or an experienced radio/TV technician for help.

Caution: Any changes or modiycations to this device not explicitly approved by manufacturer could void your authority to operate this equipment.

This device complies with part 15 of the FCC Rules. Operation is subject to the following two conditions: (1) This device may not cause harmful interference, and (2) this device must accept any interference received, including interference that may cause undesired operation.

2.3 Prevent Moisture

R/C models are composed of many precision electrical components.

Store the battery and model in a dry area at room temperature. Exposure to water or moisture may cause the model to malfunction resulting in loss of responsiveness, or a crash.

2.4 Proper Operation

For safety please only use Hubsan's spare parts for replacement.

2.5 Always Be Aware Of The Rotating Propellers

When in operation, the propellers will be spinning at high speed. The prop blades are capable of inflicting serious body injury and damage to the property.

Be cautious of your actions and careful to keep your body and loose clothing away from the blades. Never take your eyes off the model or leave it unattended while it is turned on. Stop operation immediately if the model flies out of your view. Once landed, immediately turn off the model and transmitter.

2.6 Avoid Flying Alone

Beginners and all First Pilot View(FPV) fliers should avoid flying alone when learning flight skills. It is advised that an experienced pilot be in nearby guidance.

3 SAFETY CHECK BEFORE FLYING

CAREFULLY INSPECT THE X4 BEFORE EVERY FLIGHT

• Before operation, please check the batteries of the transmitter and receiver are charged enough for the flight.

• Before turning on the transmitter, please check that the throttle stick is in the full down position.

• Carefully check rotor blades and rotor holders. Broken or premature failure of parts will result in a dangerous situation.

• Check the battery and power plug are securely fastened. Vibration and violent flight may lead the plug loosen and result in loss of control.

• When turning on the unit, please follow the power on/off procedure: for Power ON- please turn on the transmitter first, and then turn on the receiver. For Power OFF- please turn off the receiver first and then turn off the transmitter. Improper procedure may cause loss of control of the quadcopter .

4 TRANSMITTER H107D-A05

4.1 Identification and functions of the Main Menu

Main Menu

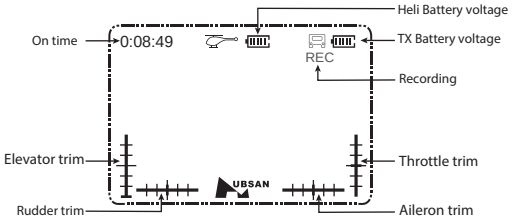

(MODE 1)

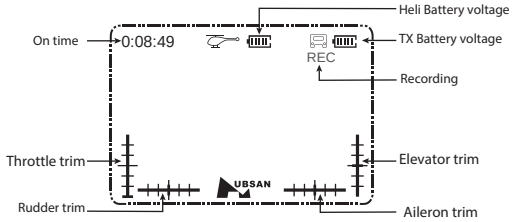

(MODE 2)

TRANSMITTER

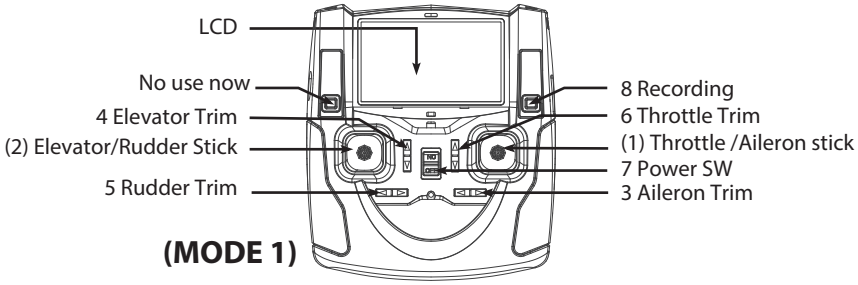

(MODE 1)

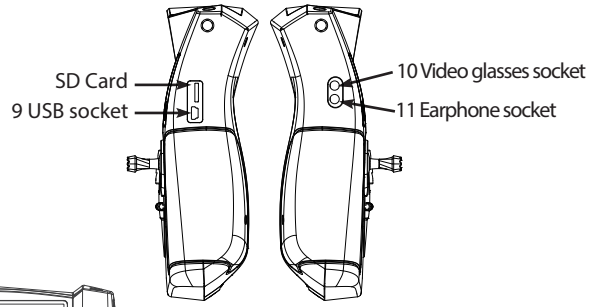

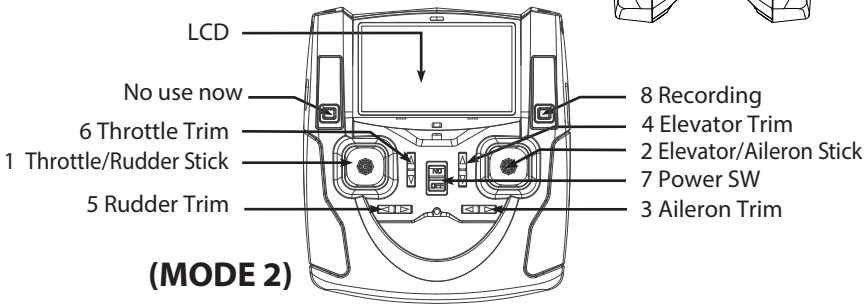

(MODE 2)

10. LED removal & installation.

Removal: Unscrew and remove the lower shell and the rubber feet. Then unsolder the red and yellow wires.

Installation: Solder the red wire on anode/positive (+), the yellow on cathode/negative (-), press the LED wires first, then the motor wires in the leg slots. Install the lower shell, then the rubber feet. You can determine the color of the LED lights by looking at the color of the LED wire insulation at the bottom of the LED lens: red color is red light, blue color is blue light.

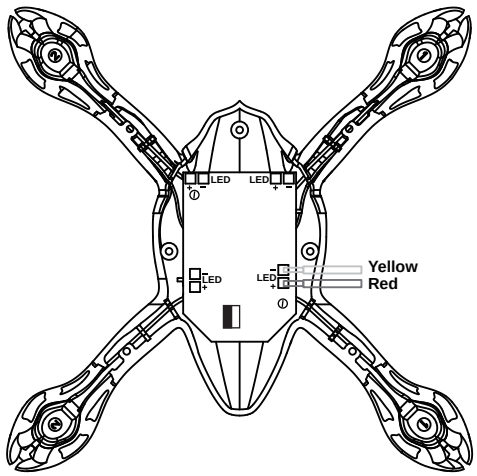

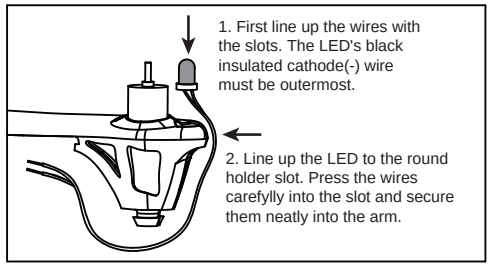

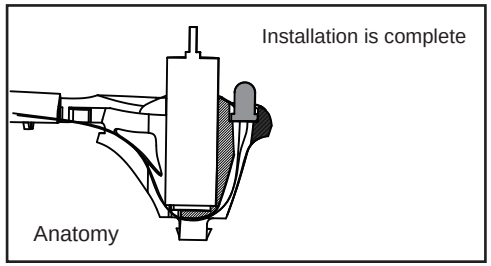

11. The motors are a little gritty and do not spin as freely after crashes.

Answer: You can hear grinding and see that motor is not spinning freely by flicking the prop. Press the shaft down from the top of the prop and motor to fix the problem, or replace the motor.

12. The arm of the X4 separates after a hard landing or crash.

Answer: This is a special design to absorb the impact from hard crashes. Simply force the arms to snap back into the joint position by hand as shown in the picture.

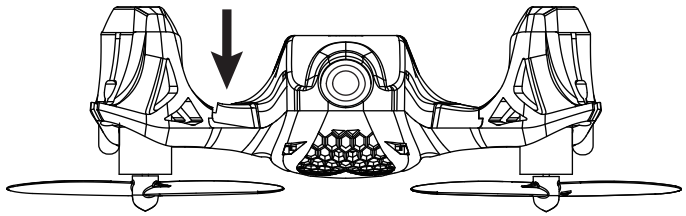

1.Transmitter and X4 will not bind.
Answer: Throttle position needs to be fully minimized. Please do not move the transmitter sticks or trims during initial power-on binding.

2. Transmitter LED light came on and then suddenly went off.
Answer: Replace new AA batteries

3. LCD transmitter not showing the setting interface after holding down the joystick for 1 second.
Answer: The throttle stick is not in the lowest position.

4The quality of the video is not good, and it stutters.
Answer: Please use brand HD SDHC card, such as Kingston Micro SDHC class6 4G card. Do a format in the Transmitter using the SD format menu button.

5. Gyro not working well
Answer: (1) Battery voltage too low. (2) Re-bind (3) Land on to the ground with the throttle fully minimized for 3 seconds and take off again.

6. Unable to Flip
Answer: (1) Press the Elevator stick straight in one time to enter into the expert(flip) mode. (2) In the expert(flip) mode, the sensitivity on each channel should be above 90%, you can program the sensitivity in the setup menu. Please check manual 4.4 Stick Sensitivity Adjustment. (3) Press the Elevator stick straight in to turn off anti-flip. (4) Lipo power is too low and needs to be recharged.

7. Quadcopter is shaking or oscillating with noise.
Answer: Please check to see that the motors, canopy, body and props are all properly positioned.

8. Switching between low and high rates on the transmitter is not very user-friendly.
Answer: Press the Elevator stick briefly only one time to switch on/off the expert mode(red flashing TX LED) and normal mode(green solid LED). The word "Expert" will also appear at the bottom center on the LCD.

9. Can not take off.
Answer: (1) Wrong installation of the props. Props are marked with "A"(CW) and "B"(CCW). Please check the pictures below for the correct order. (2) Wrong installation of motors. Please check to make sure that each motor is installed in its correct position. There are two different types of motors with different motor wire colors. Please check the pictures below for the correct order.

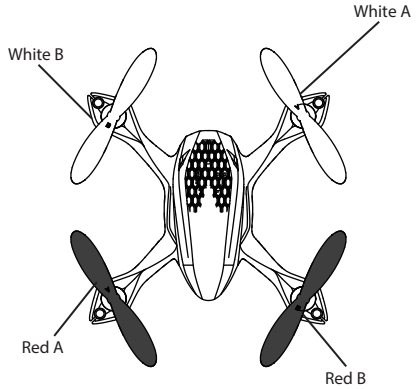

(Top View)

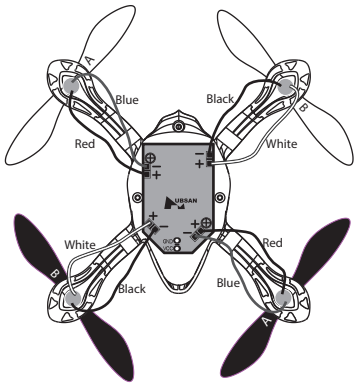

(Bottom View)

Input Key Function

S/N	Identification	Function
1	**MODE 2** Throttle/Rudder Stick	Forward and backward movement of the stick makes the quadcopter ascend and descend respectively. Left and right movement of the stick will rotate the quadcopter's fuselage left/right respectively.
2	**MODE 2** Elevator/Aileron Stick	Forward and backward movement of the stick makes the quadcopter move forward and backward respectively. Left and right movement of the stick makes the quadcopter drift sideways left/right respectively.
(1)	**MODE 1** Throttle /Aileron stick	Forward and backward movement of the stick will make the quadcopter increase or decrease speed respectively.Left and right movement of the stick makes the quadcopter roll left/right to initiate a banked turn.
(2)	**MODE 1** Elevator/Rudder Stick	Forward and backward movement of the stick makes the quadcopter nose point up/down respectively. Left and right movement of the stick makes the quadcopter yaw left/right respectively.
3	Aileron Trim	Aileron trim adjusts for left and right drift.
4	Elevator Trim	Elevator trim adjusts for forward and backward drift.
5	Rudder Trim	Rudder trim adjusts for drift of left and right rotation or yaw.
6	Throttle Trim	Throttle trim normally left at neutral. The lower trim turns LEDs on and off.
7	Power SW	Pushing the switch up turns on the transmitter. Pushing it down turns it off.
8	Recording	The new model can support for video recording. Press the Recording button for 1 second to confirm or exit.
9	USB socket	Only for engineer to upgrade the software, please do not use it to connect computer
10	Video glasses socket	Connect Hubsan H510 video glasses, which not included and need purchase
11	Earphone socket	Connect earphone after we upgrade the transmitter, now there is no voice transmission

4.2 Battery Mounting

Notice: >Do not mix old and new batteries
>Do not mix different types of batteries
>Do not charge non-rechargeable battery.
>Only use 4XAA batteries, using incorrect batteries can cause damage .

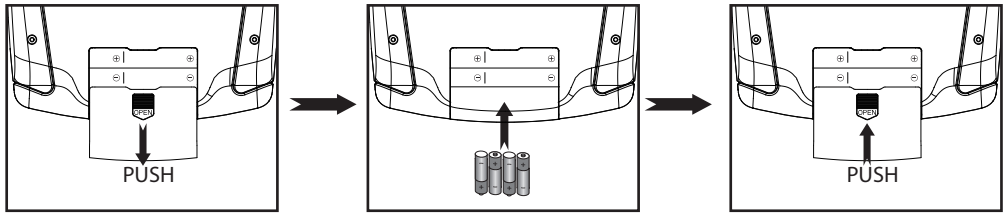

Take out the cover

Install 4 x AA battery according to the correct polarities

Return the cover

Notice :

1. The video will stop when the TX battery is low.
2. When the SD card is full, it can't record anymore and the screen will display "SD Full".
3. It is best to use a 4G+, and class 4+ SD card. Format in the transmitter before use.
4. When the power on the TX is low, the red LED will blink quickly and the LCD screen will turn black. The TX and X4 will not bind if the batteries are low. Please replace with new batteries.
5. If the batteries in the TX are running low whilst flying the X4, you will still have control. Please land the X4 and then replace batteries in the TX.
6. The TX can only use 4XAA batteries or NI-MH AA batteries, other batteries will damage the TX.

4.3 Frequency selectable 5.8Ghz

Your transmitter will automatically find the best frequency to ensure the quality live video transmission. in case there is any interference in your location, you can change the setting from the range 5.725 to 5.865 Ghz to get longer range and better video transmission.

Press down the ELEVATOR stick for 1 second to enter setting status, move the stick up/down to choose **5.8G FREQUENCE**, push the ELEVATOR stick to the right and move the stick up/down to select the frequency set, set what frequency you need by pushing the stick left/right, exit this setting as the displayed arrows show. Or hold down the ELEVATOR stick for 2 seconds to exit.

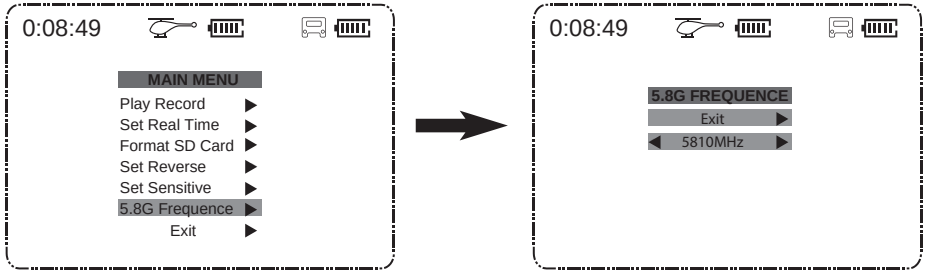

Exploded View

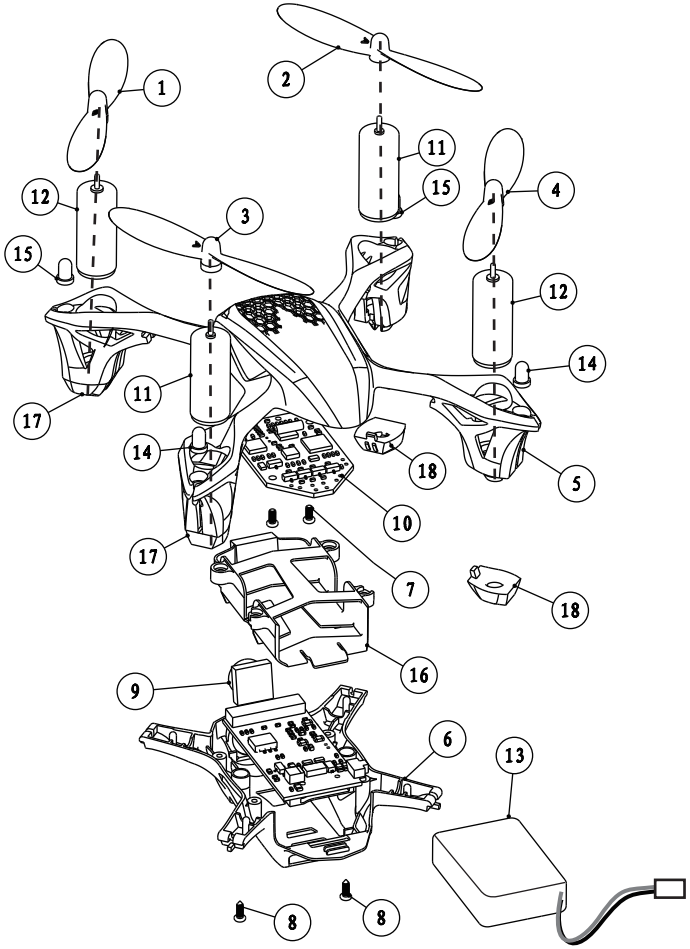

No	PART NAME	QTY		No	PART NAME	QTY
1	White blade B	1		10	FPV RX	1
2	White blade A	1		11	820 motor(clockwise)	2
3	Red blade A	1		12	820 motor(anticlockwise)	2
4	Red blade B	1		13	Li-po battery	1
5	Upper shell	1		14	LED(Red)	2
6	Lower shell	1		15	LED(Blue)	2
7	Screw(PB1.4*3)	2		16	Battery box	1
8	Screw(PA1.4*4)	2		17	Rubber feet-1	2
9	Camera PCB module	1		18	Rubber feet-2	2

Removing Props: Hold the prop, insert the U wrench under the prop, press down and the prop will easily come off the motor shaft.

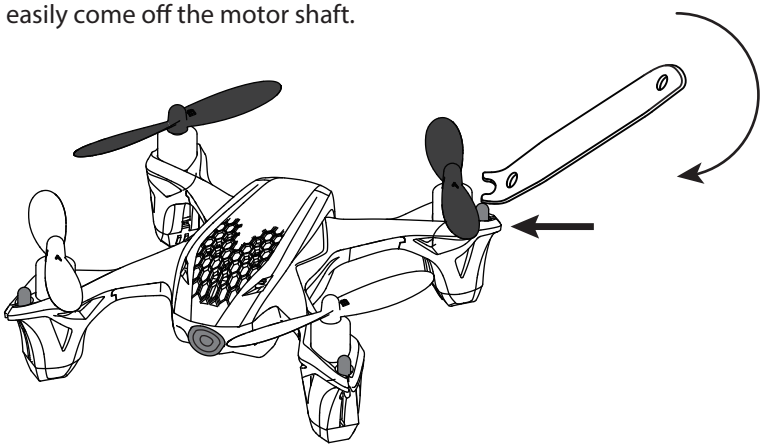

The propellors are dangerous when the quadcopter is flying. To avoid injury or damage, please consider installing the protection cover.

Instructions:

Remove the props. Position the cover's four holes with the motors. Press each of them on the motors, then re-install the props in their correct positions on the X4 .

When removing the protection cover, please remove the props first as in the above steps, and pinch off the protection cover from each motor. After any crash landing, please check to make sure the protection cover is still on tight, and make sure the body, motors and props are not damaged.

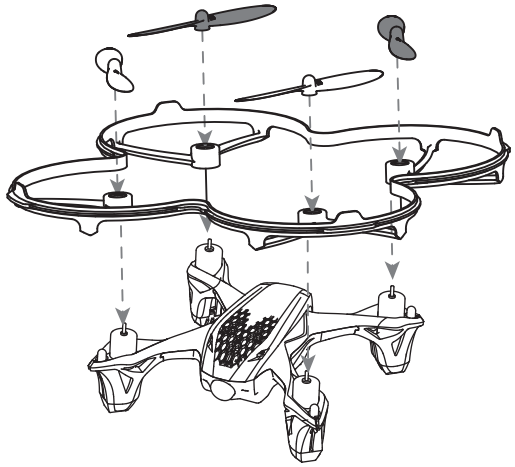

4.4 Play Record

Your transmitter can play the video recording that you saved.

Press down the ELEVATOR stick for 1 second to enter setting status, move the stick up/down to choose **PLAY RECORD**, push the ELEVATOR stick to the right, push right/left to choose NEXT/STOP. Hold down the ELEVATOR stick for 2 seconds to exit.

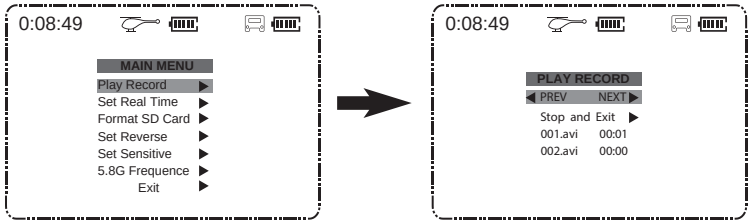

4.5 Set Real Time

Your transmitter can set a real time clock. Once you set the time it can display the real time in your time zone.

Press down the ELEVATOR stick for 1 second to enter setting status, move the stick up/down to choose **SET REAL TIME**, push the ELEVATOR stick to the right, move it up/down to choose and push right/left to set the time. After finishing, exit by pushing the ELEVATOR stick to the left. Hold down the ELEVATOR stick for 2 seconds to exit.

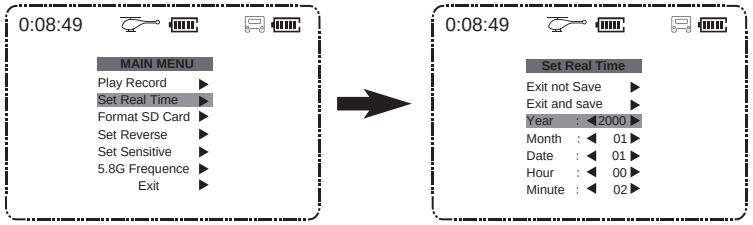

4.6 Format SD Card

Insert your SD card into the transmitter. The transmitter can format your SD card.

Press down the ELEVATOR stick for 1 second to enter setting status, move the stick up/down to choose **FORMAT SD CARD**, push the ELEVATOR stick to the right, move it up/down to choose and push right to confirm or exit. Hold down the ELEVATOR stick for 2 seconds to exit. **WARNING! ALWAYS FORMAT AND ACTIVATE CAMERA RECORDING BEFORE FLIGHT!**

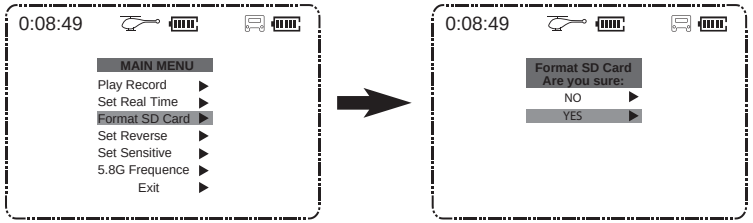

5 LI-PO BATTERY CHARGING

5.1 The quadcopter is equipped with a 3.7V 380mAh Lipo battery

5.1.1 Take out the battery from the bottom of the X4

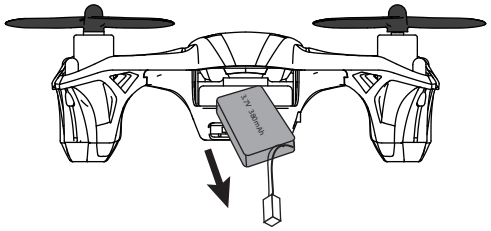

5.1.2 Connect the battery with USB charger, the LED light is ON whilst charging and turns OFF when charging is complete.The USB charger can connect to any smartphone charger except Iphone, also can connect to the USB socket in cars.The voltage of the USB is +5±0.5V.

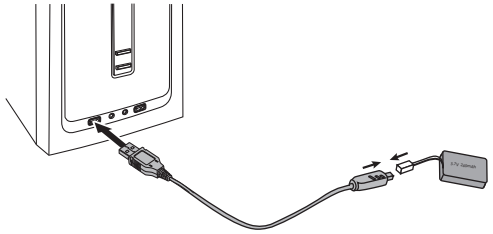

5.2 Please refer to 2.2. Safety Advisory Notice

Always partially charge your LiPo battery before storage. LiPo batteries retain the power over a reasonable period; It is not normally necessary to recharge stored LiPo batteries unless stored for periods longer than 3-6 months.

If your LiPo battery has been over-discharged, it will not be possible to recharge it again.

LiPo Battery Disposal & Re-Cycling

Lithium-Polymer (LiPo) batteries must not be placed in with household refuse. Please contact your Local Authority (Council) or the supplier of your model for local regulations and the location of your nearest LiPo battery recycling centre.

TEMPORARY STORAGE of DAMAGED LiPo BATTERIES:
Bury the LiPo battery in a bucket of dry sand or (if discharged) the battery may be neutralized by immersion in a salt water bath.
If in doubt: always seek expert advice!

In Expert Mode, the X4 can fly at high speeds and do flips. if you don't need it to flip, you can select anti-flip mode. Press the throttle stick to select or deselect anti-flip. OFF=one TX beep=it can't flip. ON=two TX beeps=It can do flips. Note that when the X4 runs out of lipo power, it also can't flip.

9 PROPELLER INSTALLATION AND REMOVAL

The X4's props are not identical. Each prop is labeled with an A or B. When installing replacement props, be certain to install them as shown. The X4 will not fly, and will flip and crash if the props are not installed in their proper locations.

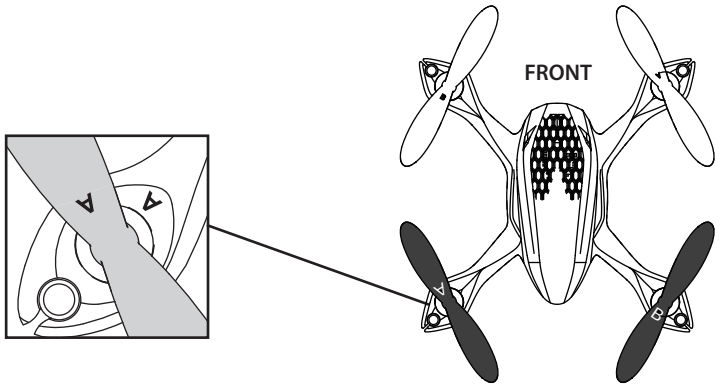

Installation: Pinch the prop hub, line up the hole to the motor shaft, press it firmly but gently straight down.

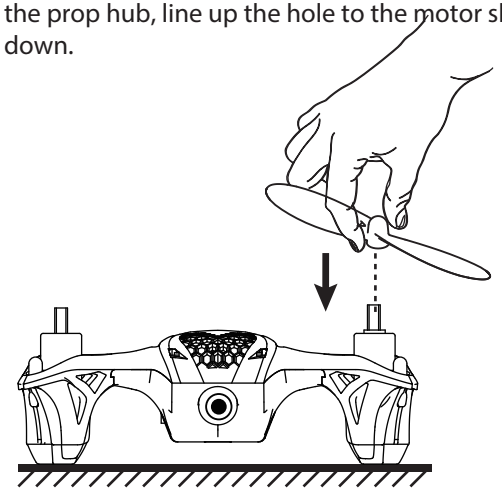

8.3.2 Right side flip

Push the joystick to the full left side and then quickly push the joystick to full right and release the stick to the center after the flip.

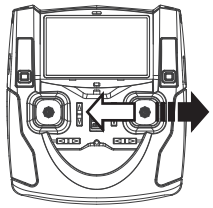

MODE 2

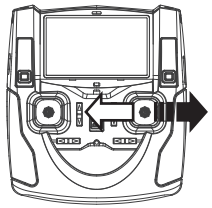

MODE 1

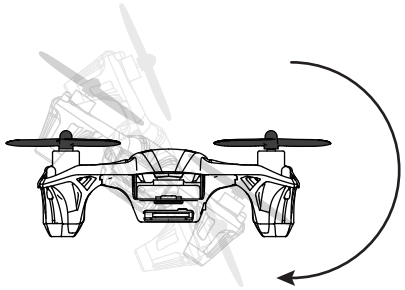

8.3.3 Forward flip

Pull the joystick to the back and then quickly push the joystick to the front and release the stick to the center after the flip.

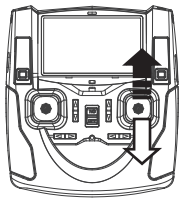

MODE 2

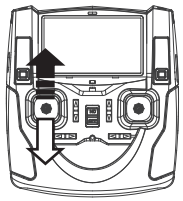

MODE 1

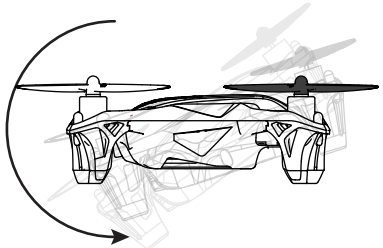

8.3.4 Backward flip

Push the joystick to the front and then quickly pull the joystick to the back and release the stick to the center after the flip.

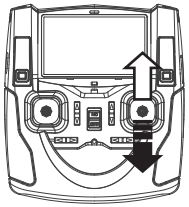

MODE 2

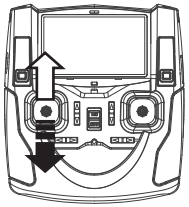

MODE 1

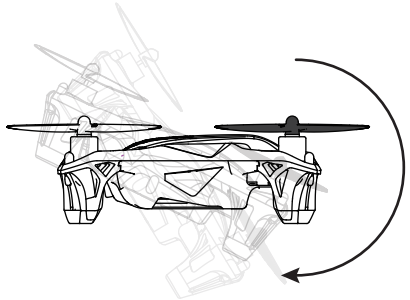

6 VIDEO RECORDING

Note:

Always turn OFF the power of the transmitter before inserting or removing the SD card. Always stop the video recording function and power off the battery firstly, and then you can take out the SD card.

WARNING! ALWAYS FORMAT AND ACTIVATE CAMERA RECORDING BEFORE FLIGHT!

6.1 Insert the SD card

Note:Carefully and properly orient the SD card for insertion in the TX. (See the picture to the right) Avoid removing the SD card and re-inserting again too quickly otherwise the recording module will not work properly

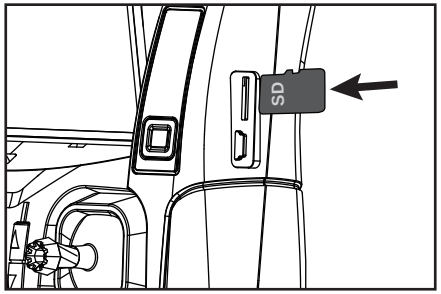

6.2 The screen will display REC in red and blinking when recording is started.(See the right picture)

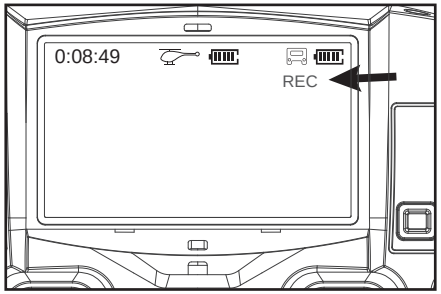

6.3 Start/Stop recording using the remote.
WARNING! First activate the camera before flight in order to make sure the SD card is formatted. Formatting while in flight will result in loss of control.

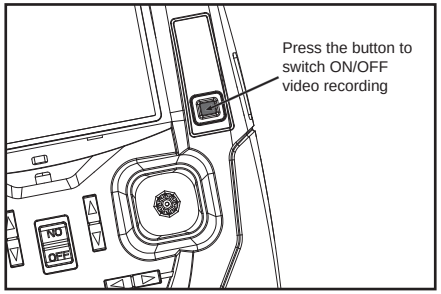

7 START TO FLY

7.1 Power-On (Failsafe) Procedure

Your X4's flight contoller is coded with a Power-On failsafe.

This is designed to ensure that the X4's motor will not start unless it detects a suitable radio-control signal when the LiPo battery is connected. The correct Start-Up sequence is as follows:

7.1.1 Make sure the throttle stick is in the full down position.

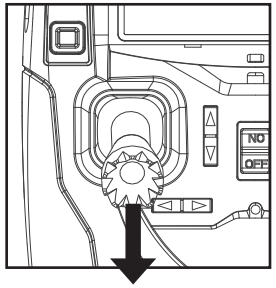

7.1.2 Power on the transmitter and the red LED will be blinking. Please do not move any other stick or trim before the TX and X4 match code and bind, or the X4 will drift. The TX LED will turn green when the TX binds with the X4.

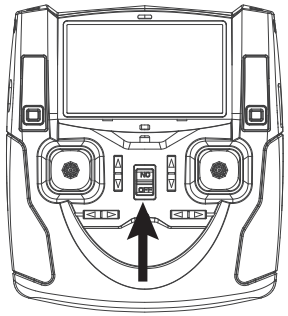

7.1.3 Apply power on the X4 by connecting the battery plug with correct polarity. Please first disconnect the X4 battery plug and then turn off the TX when you stop flying.

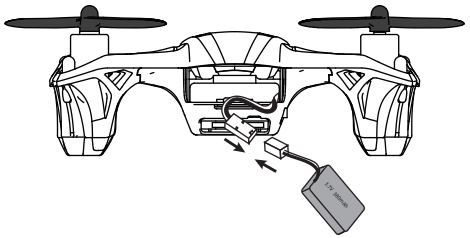

8.3 Aerial Flip Tips.

The flip maneuver will only work in the the EXPERT MODE when anti-flip is not selected. You need to press the elevator stick one time to switch into the expert mode. To select anti-flip momentarily press the throttle stick in: anti-flip=one beep. flip=two beeps.

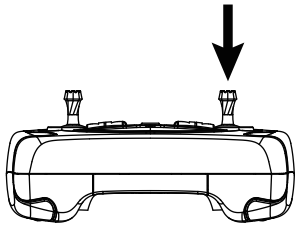

MODE 2

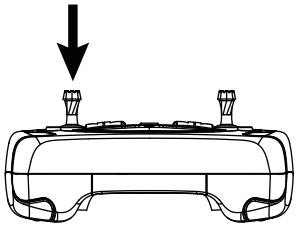

MODE 1

Your X4 can do 360° flips by pushing the joysticks as described below. For proper flip execution, make certain that the X4 is close to level, within a 30° angle with the ground, and add some climb throttle before you move the pitch and roll sticks.

8.3.1 Left side flip

Push the joystick to the right side and then quickly push the joystick to the left and then release the stick to the center position after the flip.

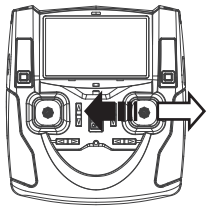

MODE 2

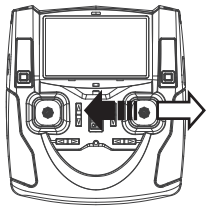

MODE 1

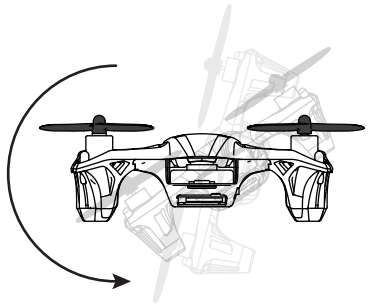

8.2 SENSITIVITY SET UP

If you would like to change the sensitivity of any of the stick functions then follow instructions below. A higher sensitivity value will enable larger/faster movement of the aircraft,while a lower sensitivity value will enable smaller/slower movement.

Press down the ELEVATOR stick for 1 second to enter setting status, move the stick up/down to choose **SET SENSITIVE**, push the ELEVATOR stick to the right, press the elevator/ aileron/ rudder trim to set the sensitivity. Push the elevator stick to the right to exit . Hold down the ELEVATOR stick for 2 seconds to exit the setup menu.

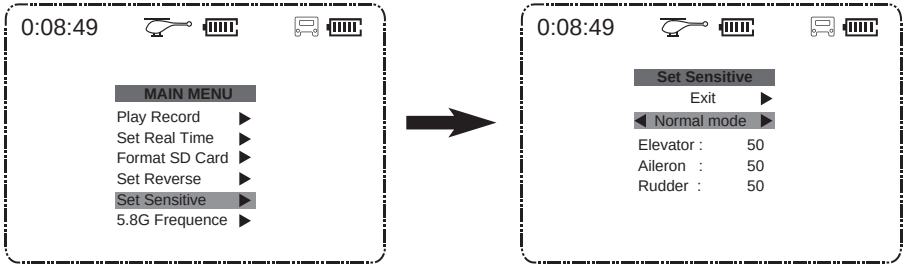

◆ EXPERT MODE

In expert mode, the sensitivity can be adjusted even further (up to 100) to give the user even more ability to manoeuvre the aircraft. Follow instructions below to switch this on/off.

Press down the ELEVATOR stick for 1 second to enter setting status, move the stick up/down to choose **SET SENSITIVE**, push the ELEVATOR stick to the right, choose NORMAL MODE, push the ELEVATOR stick to the right to enter into the expert mode, press the elevator/ aileron/ rudder trim to set the sensitivity. Push the ELEVATOR stick to the right to exit this set. Hold down the ELEVATOR stick for 2 seconds to exit.

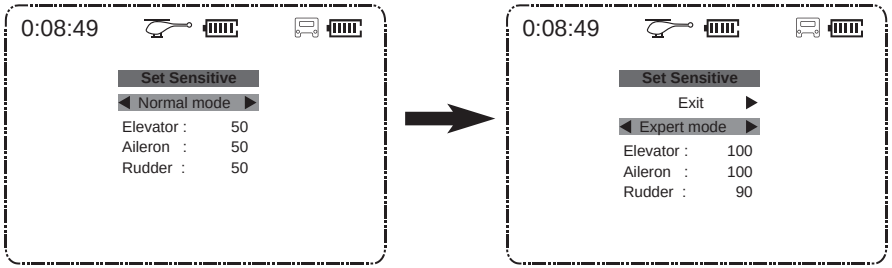

7.1.4 Insert the battery into the bottom of your X4. Make sure the battery and wires are pushed into the end of the battery compartment, so they will not negatively affect the center of gravity(COG) and cause unstable flight. **Please twist the wires and squeeze them into the notched holder as the picture shows, to prevent inflight shaking or oscillations.**

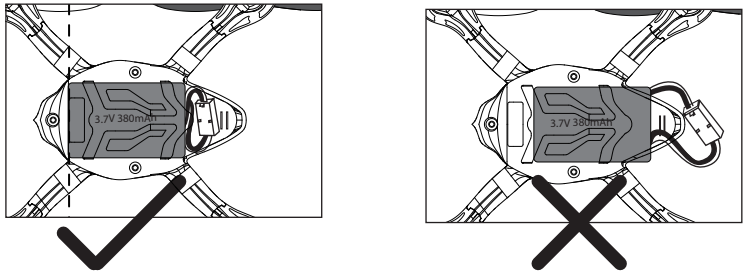

7.1.5 **About LED lights:**

After a “beep”, and the red LED on the transmitter turns green, the 6 lights on the X4 will be on solid indicating that the bind code is matched. The LEDs will be on and night flying is possible. Press the lower throttle trim for about 1 second to turn the LEDs on or off. Even if you select the LEDs off, they will blink when the lipo power is low. **NOTE: The LEDs will blink when the quadcopter runs out of power or the X4 code does not bind with the TX.**

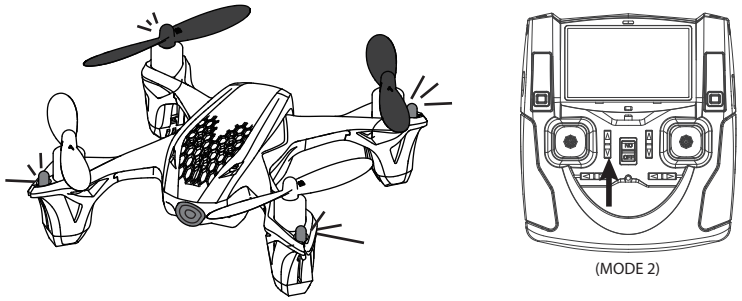

First Pilot View(FPV) Instructions:

For those just starting FPV with the Hubsan H107D please start **S-L-O-W-L-Y** and use the following guidance:

1. Learn how to fly the X4 and maintain control both indoors and outdoors at an altitude no higher than 10 feet before you advance to FPV flight and higher altitudes. A large part of being successful in FPV is training your fingers and brain to know how the model will respond with your inputs so you can predetermine your stick movements. It is very different to look at an LCD or goggles and determine hover, altitude and speed. You will need to visually correlate and remember how the model reacts with stick movements and also the differences of those movements when in no wind and windy conditions.

2. When flying indoors or outdoors allow for plenty of free space with no couches, tables, trees buildings or other objects that you might fly into. A large area with soft grass is a perfect outdoor area to learn to fly. An asphalt parking lot is a terrible place to learn to fly. It is recommended that you use a safety spotter for your FPV flights!

3. First learn to master hovering, then master flying a square or rectangular pattern by recognizing features that are picked out before you begin your FPV flight.

4. The X4 prop guard is excellent to use indoors if required for your personal skill level, but using outside is optional and less desirable in many cases. Most fliers will want to remove it in order to gain some flight performance. The reason is that any wind when using the prop guard will make it more difficult to fly especially during FPV. Despite the safety feature and protection when using some kind of prop guard, all multi-copters lose flight performance when prop guards are used and will perform much better without them. You should also adjust your rates a bit higher for outdoor flight to something like 70 for pitch and roll. The X4 default expert rate settings will be too high for most new fliers and even skilled fliers for FPV. So as a suggestion for practice just increase the beginner values to about 70 when you are ready for outdoor FPV flying.

7.2 Transmitter sticks and X4 control responses

CAUTION: To avoid loss of control: ALWAYS move the TX sticks S-L-O-W-L-Y! Be aware that control inputs will reduce available lift . Be ready to use a little extra throttle to maintain height during maneuvers.

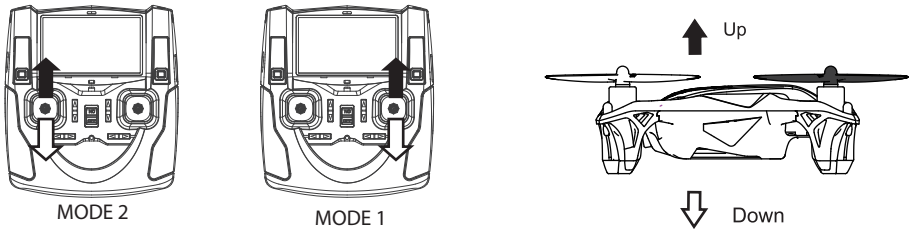

Throttle (Collective Power) increases/decreases the altitude of your quadcopter

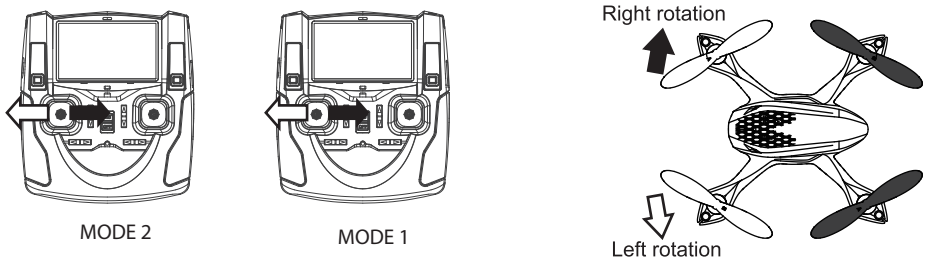

Rudder (Collective Torque Yaw) rotates your quadcopter's fuselage Left / Right

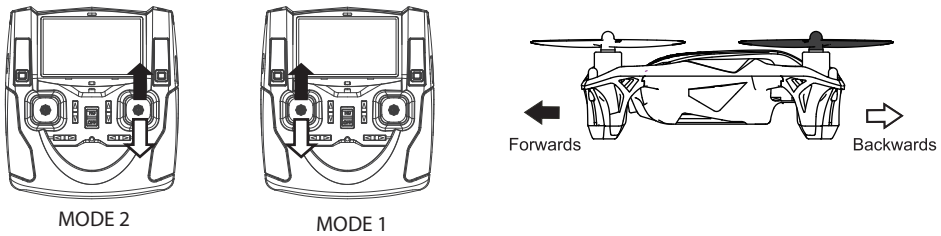

Elevator (Cyclic Pitch) moves your quadcopter Forwards/Backwards

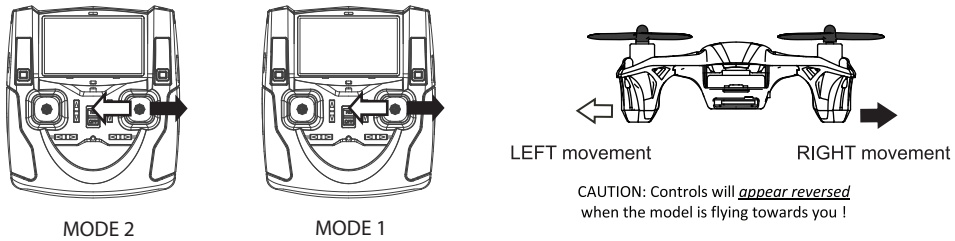

Aileron (Cyclic Roll) moves your quadcopter 'sideways' Left/Right

8 ADVANCED PERFORMANCE SETUP

8.1 Reversing channel setup

If you would like to reverse any of the stick functions due to personal preference then follow the instructions below. Be aware that this will change the controls back to front.
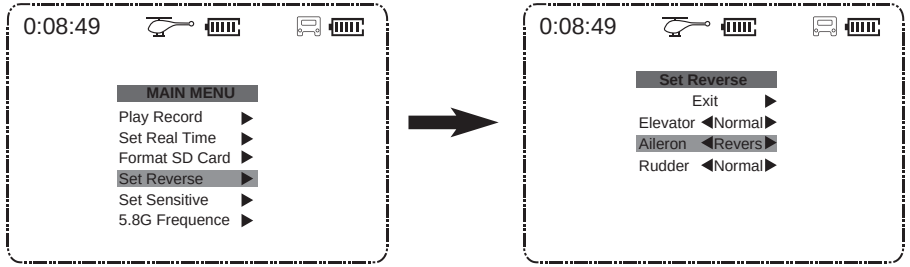
Press down the ELEVATOR stick for 1 second to enter setting status, move the stick up/down to choose **SET REVERSE**, push the ELEVATOR stick to the right, move it up/down to choose and push right to confirm or exit. Hold down the ELEVATOR stick for 2 seconds to exit.