POWER-POLE®

MOVE™

BRUSHLESS TROLLING MOTOR

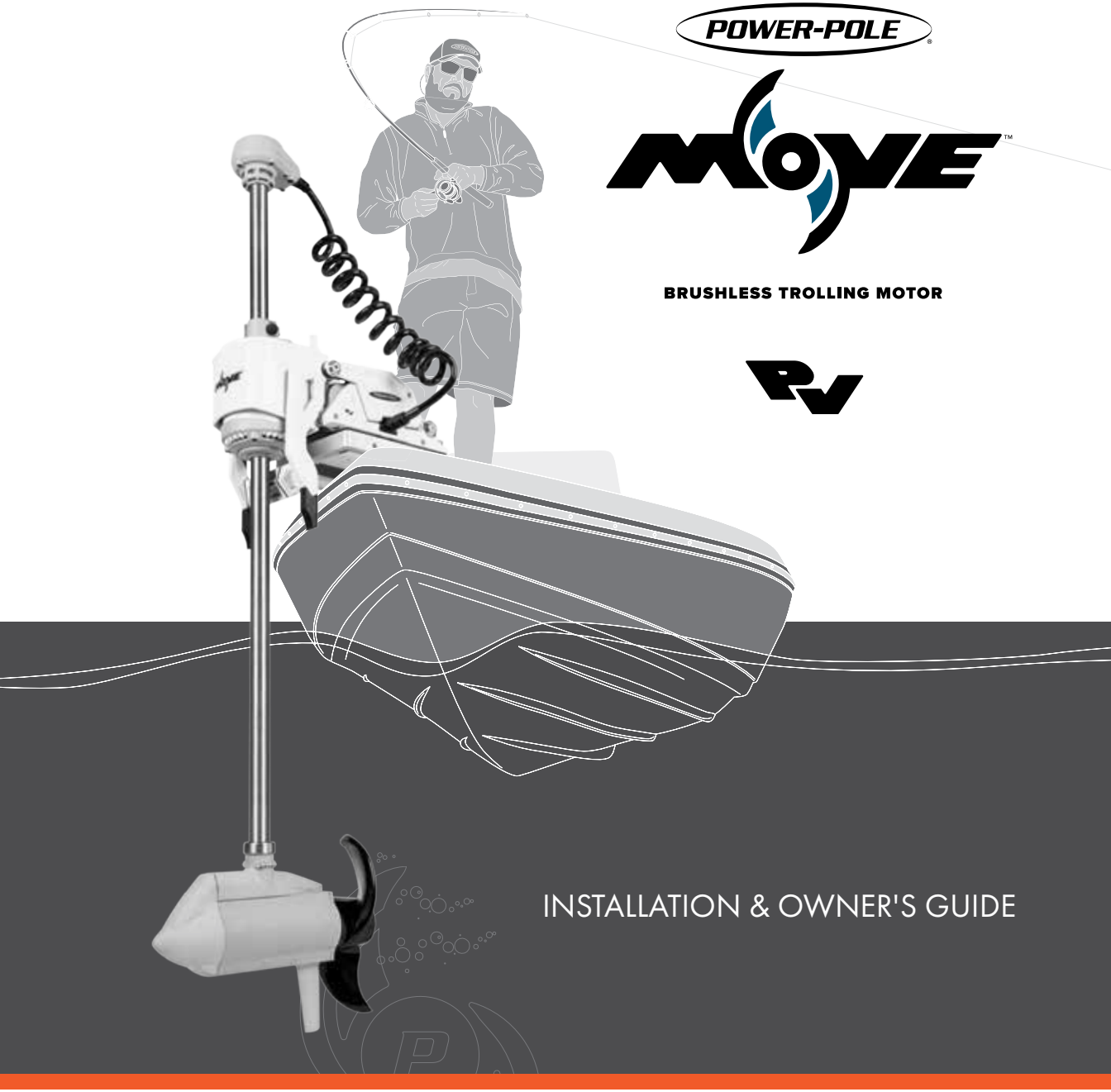

INSTALLATION & OWNER'S GUIDE

MODEL NUMBERS

MV-PV-45-BK
MV-PV-52-BK
MV-PV-60-BK
MV-PV-72-BK
MV-PV-45-WT
MV-PV-52-WT
MV-PV-60-WT
MV-PV-72-WT
MV-AC-INFO-DSPY
MV-AC-RC-REMOTE

Powered by C-MONSTER® CONTROL SYSTEM

CONGRATULATIONS
on your purchase of the MOVE™
The first Trolling Motor from Power-Pole®, home of the original Shallow Water Anchor.

TABLE OF **CONTENTS**

REGISTER YOUR MOVE 4
WARRANTY INFORMATION 5
IMPORTANT SAFETY INFORMATION 6
INSTALLING THE MOVE
Parts List 8
Selecting a Mounting Location 10
Mounting the Move PV 11
Installing the Hand-Held RC Charging Cradle 15
CONNECTING THE MOVE
Important Connection Information 17
24v Wiring 18
36v Wiring 19
OPERATING THE MOVE
Trolling Motor Terminology 20
Stowing, Deploying and Adjusting 21
Features Overview 23
Navigation Head LEDs 24
Using the Wireless Hybrid Remote 24
Reading the Wireless Info Display 26
Power-Pole App 27
MAINTENANCE AND STORAGE 28
FAQs 30
COMPLIANCE STATEMENTS 32
APPENDICES
Appendix A: Gel-Coat Drilling Procedure 33
Appendix B: Wire Connection/Termination Procedure 33
Appendix C: Additional Product Information 34
Appendix D: Mounting the Move PV without the Quick Release Mount 35
Appendix E: Error Codes and Update LED Colors 38
Appendix F: Initial Startup Procedure and Recommendations 40

REGISTER YOUR MOVE™

LOCATE YOUR SERIAL NUMBER

The serial number can be found on the front of the unit when in the stowed position.

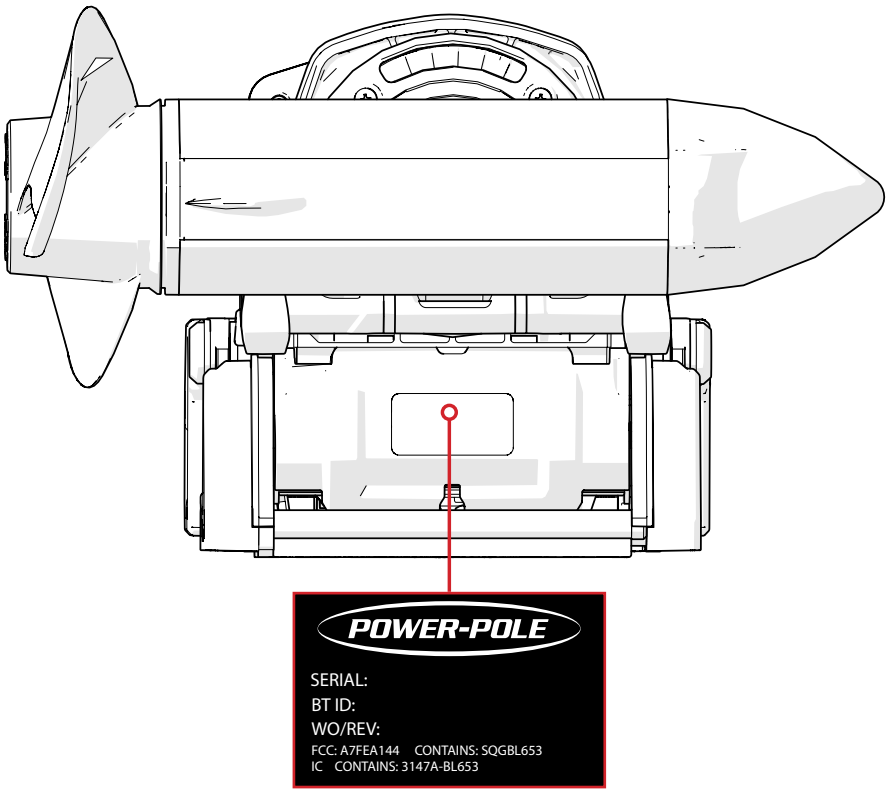

REGISTER YOUR MOVE

Be sure to register your Move on the Power-Pole App or by going to www.power-pole.com and creating an account. Once your trolling motor has been registered, our customer service team will be able to easily assist you with any warranty claims.

WARRANTY Information

To find a Certified Warranty Center, visit www.power-pole.com.

The MOVE comes with a lifetime warranty on the shaft and a three-year warranty on all other components.

Conditions of this Warranty

A Move unit manufactured by JL Marine Systems, Inc. is warranted against defects in material and workmanship to the original end consumer from the original purchase date according to the following stipulations:

1. MOVE warranties are activated when product is registered online at **www.power-pole.com/register** or by using the Power-Pole App or upon receipt by JL Marine Systems, Inc. of a completed warranty card and dealer receipt/ proof of purchase, postdated within (10) days of the original purchase date. Please retain your sales receipt as proof of purchase.
2. Install Genuine Power-Pole Merchandise ONLY. This warranty is void if any non-authorized parts are used or installed.
3. This warranty is void if the Move is used commercially, structurally altered, or subject to stress beyond the physical limits of the manufactured material.
4. This warranty does not cover abrasion or abnormal abuse, nor does it cover the Power-Pole MOVE for anything other than its intended use.
5. JL Marine Systems, Inc. reserves the right to change products and designs without incurring any obligations to incorporate such changes in already completed products, or those in the hands of dealers or consumers. Products repaired or replaced under this warranty may or may not have these changes.

Shipping (Only applies to packages shipped within the Continental U.S.)

1. Parts which prove defective within (90) days from the date of purchase, JL Marine Systems, Inc. will pay for the replacement product shipping and handling fees to and from the JL Marine Systems, Inc. manufacturing plant or some other place which JL Marine Systems, Inc. might designate.
2. Parts which prove defective after (90) days but before (12) months from the date of purchase will also be repaired or replaced free of charge, but there may be a shipping charge to JL Marine Systems, Inc. manufacturing plant or some other place which JL Marine Systems, Inc. might designate.
3. Parts which prove defective after (12) months will also be repaired or replaced free of charge, but there may be a shipping and handling charge to and from the JL Marine Systems, Inc. manufacturing plant or some other place which JL Marine Systems, Inc. might designate.

THE WARRANTY CONTAINED HEREIN IS THE EXCLUSIVE WARRANTY MADE BY JL Marine Systems, Inc. AND THERE ARE NO OTHER WARRANTIES, EXPRESSED OR IMPLIED, INCLUDING A WARRANTY OF FITNESS FOR A PARTICULAR PURPOSE OR OF MERCHANTABILITY MADE WITH RESPECT TO SUCH TROLLING MOTORS. JL Marine Systems, Inc., IS NOT LIABLE FOR ANY INJURY OR MISHAPS SUSTAINED IN THE USE OF THIS PRODUCT. THE USER OF THIS PRODUCT ACKNOWLEDGES ASSUMED RISKS AND WAIVES ANY AND ALL CLAIMS AGAINST JL Marine Systems, Inc. AND ANY OF IT'S AGENTS.
This warranty applies under conditions of normal use. The warranty does not cover: 1) defects caused by improper assembly or disassembly; 2) defects occurring after purchase due to product modification, intentional damage, accident, misuse, abuse, negligence or exposure to corrosive elements; 3) cosmetic damage and 4) labor or assembly costs. Except as provided herein, JL Marine Systems, Inc. makes no express warranties, and any implied warranty, including without limitation any implied warranty of merchantability or fitness for a particular purpose, is limited in its duration to the duration of the written limited warranty set forth herein. Except as provided herein, JL Marine Systems, Inc. shall have no liability or responsibility to the purchaser or any other person or entity with respect to any liability, loss or damage caused or alleged to be caused directly or indirectly by use of the product, including, but not limited to, any incidental or consequential damages. Some states do not allow limitation on how long an implied warranty lasts or the exclusion of limitation of incidental or consequential damages, so the above limitation and exclusion may not apply to you. This warranty gives you specific legal rights. You may also have other rights which vary from state to state.

SUBMITTING A WARRANTY CLAIM

If you experience issues with your Move, you can file a warranty claim by calling our customer service team at **+1(813) 689-9932 option 2**. For the best service, have your Move serial number ready for a customer service representative.

IMPORTANT SAFETY INFORMATION

Please thoroughly read this installation & Owner's Guide. Follow all instructions and heed all safety and cautionary notices. Use of this motor is only permitted for persons that have read and understood these instructions. Minors may use this motor only under adult supervision.

WARNING

- **You are responsible for the safe and prudent operation of your vessel.**
  We have designed the MOVE trolling motor to be a high-performance tool to enhance boat operation and improve your ability to catch fish. This product does not relieve you from the responsibility for safe operation of your boat. You must avoid hazards to navigation and always maintain a permanent watch so you can respond to situations as they develop. You must always be prepared to regain manual control of your boat. Learn to operate your MOVE trolling motor in an area free from hazards and obstacles.
- **Never run the motor out of the water, as this may result in injuries from the rotating propeller.**
  The motor should be disconnected from the power source when it is not in use or is off the water. When connecting the power-supply cables of the motor to the battery, ensure that they are not kinked or subject to chaffing and route them in such a way that persons cannot trip over them. Before using the motor, make sure that the insulation of the power cables is not damaged. Disregarding these safety precautions may result in electric shorts of battery(s) and/or motor. Always disconnect motor from battery(s) before cleaning or checking the propeller. Avoid submerging the complete motor as water may enter the lower unit through the control head and shaft.
- **Take care that neither you nor the other persons approach the turning propeller too closely, neither with body parts nor with objects.**
  The motor is powerful and may endanger you or injure you or others. While the motor is running watch out for persons swimming and for floating objects. Persons who lack the ability to run the motor or whose reactions are impaired by alcohol, drugs, medication, or other substances are not permitted to use this motor. This motor is not suitable for use in strong currents.
- **When stowing or deploying the motor, keep fingers clear of all hinge and pivot points and all moving parts.**
  In the event of unexpected operation, remove power-leads from the battery.
- **It is recommended to only use JL Marine approved accessories with your Move Trolling motor.**
  Using non-approved, accessories including to mount or control your motor may cause damage, unexpected motor operation and injury. Be sure to use the product and approved accessories, including remotes, safely and in the manner directed to avoid accidental or unexpected motor operation. Keep all factory installed parts in place including motor and accessory covers, enclosures and guards.

H2
CMONSTER

INSTALLATING THE MOVE PV

WHAT'S IN YOUR BOX?

The **MOVE** comes ready to be installed right out of the box. No complicated assembly is required. We also included everything you need to have a great day on the water.

LABEL	DESCRIPTION	QTY.
	Trolling Motor Assembly and Hardware	
1	Trolling Motor Assembly	1
	MOVE PV MOUNTING HARDWARE KIT (AVG-MA-0486)	
2	1/4" x 20, 3 3/4" Stainless Flat-Head Phillips Drive Screw	4
3	1/4" Large Stainless Steel Flat Washer	4
4	1/4" Brass Tall Nylon Lock Nut	4
5	1/4" x 20, 1 5/8" Stainless Flat-Head Full-thread Phillips Drive Screw	4
6	Loctite Thread-locker, Blue	1
	MOVE PV WIRING KIT (AVG-MA-0537) **Includes (1) AVG-MA-0536 and (1) AVG-MA-0533* **MOVE WIRING KIT (AVG-MA-0536)**	
7	Heat Shrink Ring Terminal, 8 AWG, 1/4"	2
8	Heat Shrink Ring Terminal, 8 AWG, 3/8"	2
	WIRELESS HYBRID REMOTE CHARGING CRADLE HARDWARE KIT (AVG-MA-0533)	
9	#8 x 1/2" Panhead Sheet Metal Screw	2
10	Heat Shrink Ring Terminal, 18-22 AWG, #10	2
11	Heat Shrink Ring Terminal, 18-22 AWG, 3/8"	2
12	Heat Shrink Butt Connector, 18-22 AWG	1
13	Fuse Holder, ATC, and ATO 18 AWG, Red Leads	1
	PROP NUT KIT (SA-0041)	
14	Nut, Nylon Locking Anode, 3/8-24, Assembly	1
15	Shear Pin	2
	ADDITIONAL HARDWARE AND ACCESSORIES	
16	Male Quick Release Mount Stainless Steel	1
17	Male Quick Release Mount End Piece	2
18	Male Quick Release Mount Center Piece	1
19	Quick Release Pin	1
20	TECHFLOW™ Propeller	1
21	Bridge Pin	1
22	Wireless Hybrid Remote	2
23	Wireless Hybrid Remote Charging Cradle	1
24	Lanyard	2

PARTS LIST

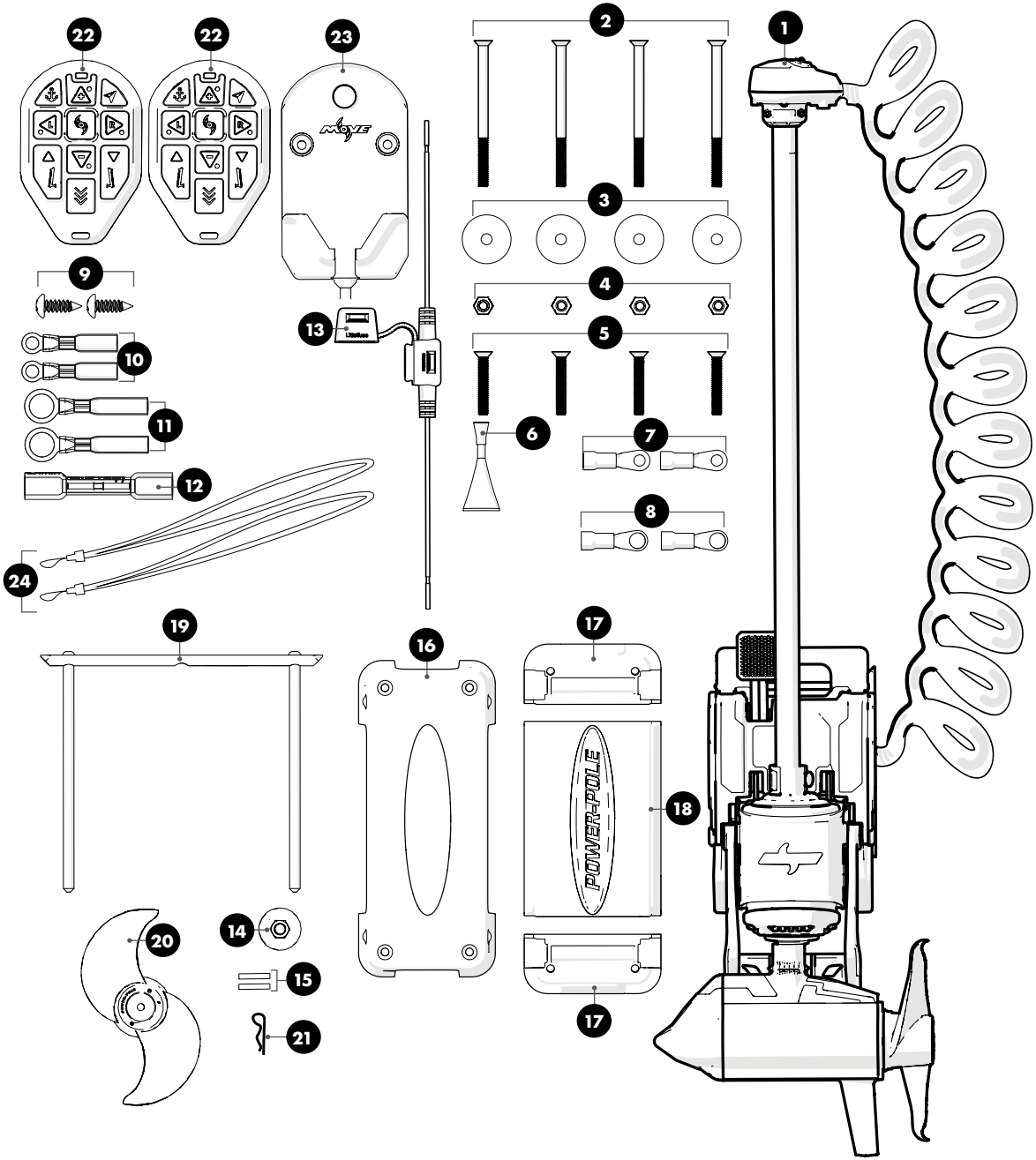
1
2
3
4
5
6
7
8
9
10
11
12
13
14
15
16
17
17
18
19
20
21
22
22
23
24
POWER-POLE

SELECTING A **MOUNTING LOCATION**

IMPORTANT! The following instructions are for mounting using the factory-installed Quick Release Mount. If you wish to mount the trolling motor without using the Quick Release Mount, proceed to **Appendix D** (p. 35).

Your MOVE™ includes all necessary mounting hardware for a deck mount. If you cannot meet the requirements listed below, consider using one of our Pulpits.

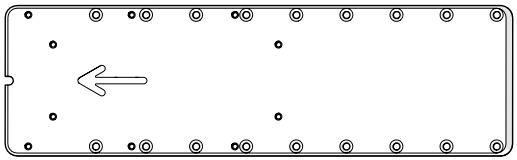

Pulpit Long

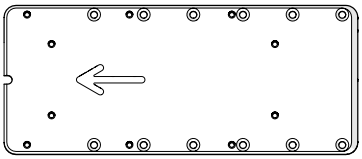

Pulpit Short

To install the trolling motor directly to the boat deck, read through the requirements below, then follow the instructions contained in the "MOUNTING THE **MOVE PV**" (p. 11) section of this manual.

Use the following parameters to locate a suitable mounting location:

- When deployed, the shaft should be as close to the center-line of boat deck as possible.
- Ensure there are no obstructions or sensitive components on or under the boat deck where the mounting hardware will be installed.
- Make sure the cam arms can have a full range of motion and will not hit the boat when the unit is deployed.
- Ensure there are no obstructions blocking the motor from fully deploying and stowing.

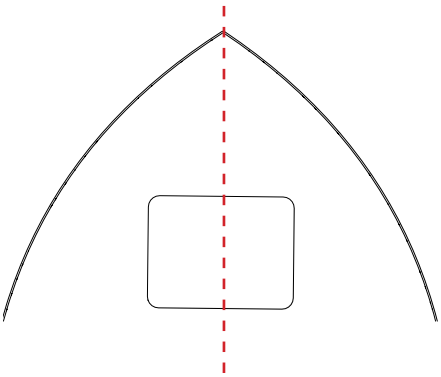

Center-line

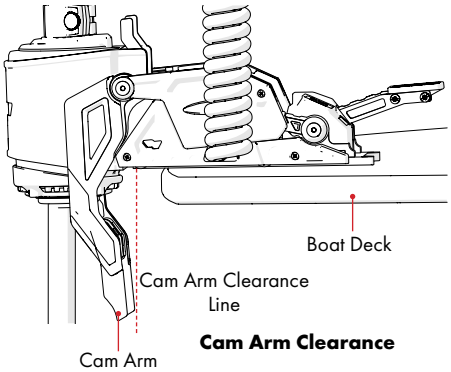

Cam Arm Clearance

MOUNTING THE **MOVE PV**

TOOLS:

- Fine-tip Marker
- #3 Phillips Head Screwdriver
- 7/16″ Socket
- 9/16" Deep Socket
- Ratchet
- Electric Drill
- 5/16" Drill Bit

LABEL	DESCRIPTION	QTY.
2	1/4" x 20, 3 3/4" Stainless Flat-Head Phillips Drive Screw	4
3	1/4″ Large Stainless Steel Flat Washer	4
4	1/4″ Brass Tall Nylon Lock Nut	4
5	1/4" x 20, 1 5/8" Stainless Flat-Head Full-thread Phillips Drive Screw	4
6	Loctite Thread-locker, Blue	1
7	Heat Shrink Ring Terminal, 8 AWG, 1/4"	2
8	Heat Shrink Ring Terminal, 8 AWG, 3/8"	2
14	Nut, Nylon Locking Anode, 3/8-24, Assembly	1
15	Shear Pin - Propeller	2
16	Male Quick Release Mount Stainless Steel	1
17	Male Quick Release Mount End Piece	2
18	Male Quick Release Mount Center Piece	1
19	Quick Release Pin	1
20	Propeller	1
21	Bridge Pin	1

MOUNTING HARDWARE

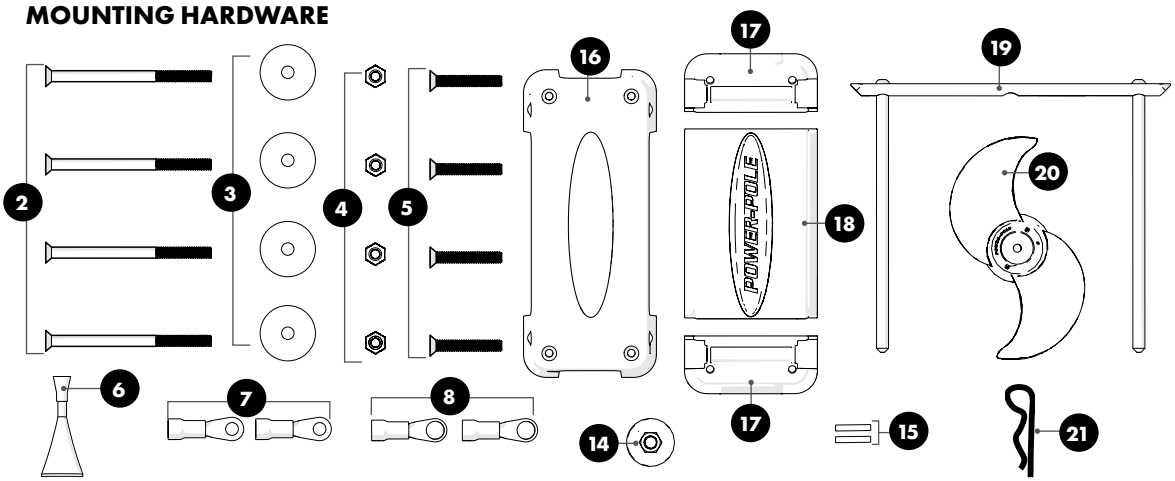

MOUNTING THE **MOVE PV**

WARNING

Always disconnect power by turning the main battery cutoff switch to the off position before performing any installations.

DRILL PILOT HOLES

STEP 1 After reading the **SELECTING A MOUNTING LOCATION** (p.10), use the included mounting template to locate a suitable location for installing the **Male Quick Release Mount**.

STEP 2 Using a **5/16" Drill Bit**, drill pilot holes for the (**4**) **Flat Head Screws** 2 that will hold the male (center) part of the **Male Quick Release Mount** to the boat deck.

CAUTION

Check the area beneath where the **Male Quick Release Mount** will be installed to ensure there are no hoses, wires, lines, tanks or other sensitive components

IMPORTANT! If installing to gel-coat, follow the drilling procedure in **Appendix A** (p.33) to ensure you do not crack or chip the gel-coat.

ASSEMBLE MALE QUICK RELEASE MOUNT

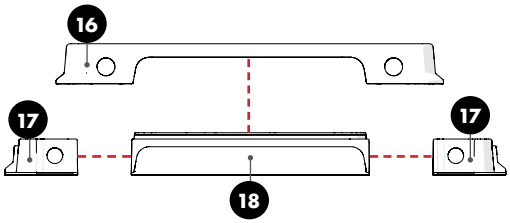

Quick Release Hardware Order

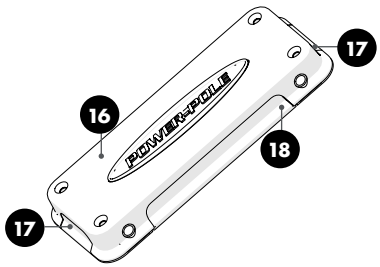

Assembled Quick Release

INSTALLING MALE QUICK RELEASE MOUNT TO BOAT DECK

STEP 1 Place the **Male Quick Release Mount** on the **Boat Deck**.

STEP 2 Install the **(4) Flat Head Screws** 2 through the holes in the **Male Quick Release Mount** and **Boat Deck**.

STEP 3 Install a **Large Washer** 3 and **Nylon Lock Nut** 4 onto each **Flat Head Screw** 2 .

STEP 4 Hold the **Screws** 2 with a **#3 Phillips Screwdriver** while tightening **Lock Nuts** 4 snug with a **7/16" Socket**.

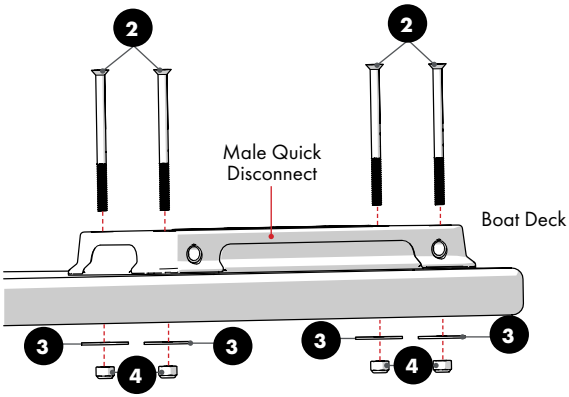

Quick Release Hardware Order

MOUNTING THE **MOVE PV**

INSTALLING MALE QUICK RELEASE MOUNT TO PULPIT LONG OR SHORT

STEP 1 Put a small amount of **Loctite** 6 onto each **Flat Head Screw** 5 .

STEP 2 Install the **(4) Flat Head Screws** 5 through the holes in the **Male Quick Release Mount** and into **Extension Pulpit Long** or **Extension Pulpit Short**. Using a **#3 Phillips Head Screwdriver** tighten until snug. **FIG B**

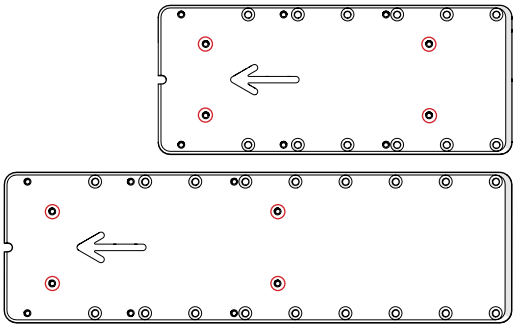

Figure A
Extension Pulpit Long or Short
Quick Release Mounting Holes

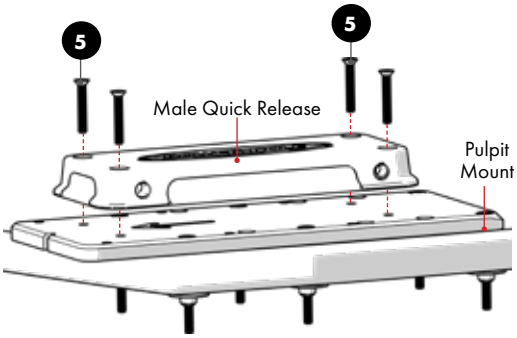

Figure B
Quick Release to Extension Pulpit

INSTALL PV TO MALE QUICK RELEASE MOUNT

STEP 1 Place the PV with the **Female Quick Release** onto the **Male Quick Release Mount**. **FIG A**

STEP 2 Slide the **Quick Release Pin** 19 into the two outer holes on the **Female Quick Release**. Insert it fully so it is resting against the **Female Quick Release**. **FIG B**

STEP 3 Install the **Bridge Pin** 21 . **FIG B**

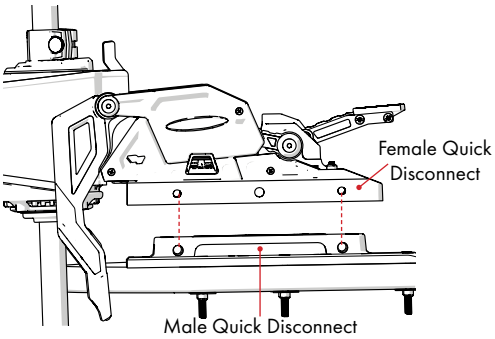

Figure A
Female to Male Quick Release

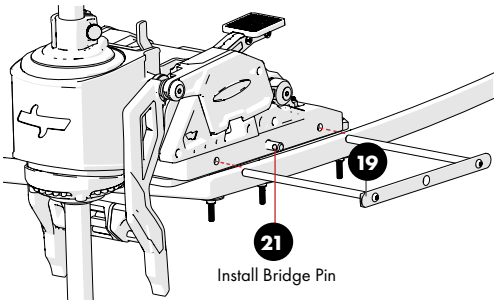

Figure B
Quick Release Pin Installation

INSTALL TECHFLOW™ PROPELLER

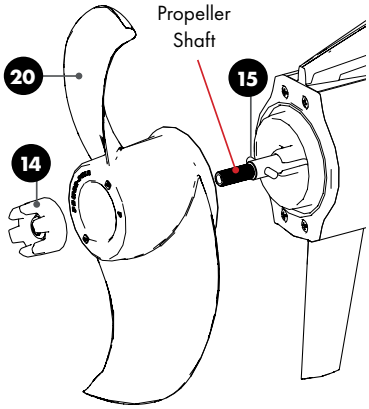

WARNING

NEVER attempt to install or remove the prop while the MOVE is connected to power.

DO NOT USE AN IMPACT WRENCH TO INSTALL THE ANODE ASSEMBLY

STEP 1 Install the **Shear Pin** 15 through the hole in the **Propeller Shaft**.

STEP 2 Line up the slot in the back side of the **Prop** 20 with the **Shear Pin** 15 and install it onto the **Propeller Shaft**.

STEP 3 Install **Anode Assembly** 14 onto the **Propeller Shaft** and tighten until snug with no play using a **9/16" Deep Socket**.

CONNECT TO POWER

NOTICE: Follow **Appendix B** (p.33) for proper ring terminal and butt connector installation procedures.

IMPORTANT! Before connecting the unit to power, you must read the **Connecting the Move** section (p.17-19).

STEP 1 Route wire to power.

STEP 2 Depending on post size, attach the appropriate **Ring Terminal** 7 or 8 .

STEP 3 Proceed to the **Connecting the Move** section (p.17-19), read all safety warnings, and follow the connection instructions for your trolling motor battery configuration.

INSTALLING THE **REMOTE CHARGING CRADLE**

TOOLS:

- Fine-tip Marker
- Electric Drill
- 7/32" Drill Bit
- 7/64" Drill Bit
- #2 Phillips-Head Bit

LABEL	DESCRIPTION	QTY.
9	#8 x 1/2" Panhead Sheet Metal Screw	2
10	Heat Shrink Ring Terminal, 18-22 AWG, #10	2
11	Heat Shrink Ring Terminal, 18-22 AWG, 3/8"	2
12	Heat Shrink Butt Connector, 18-22 AWG	1
13	Fuse Holder, ATC, and ATO 18 AWG Red Lead	1
22	Wireless Hybrid Remote	2
23	Wireless Hybrid Remote Charging Cradle	1
24	Lanyard	2

HYBRID REMOTE AND CHARGING CRADLE HARDWARE

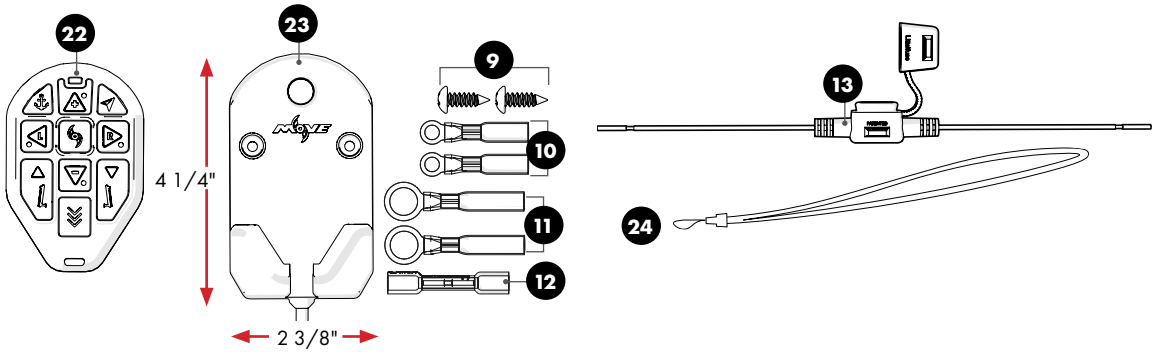

Dimensions	Cord Length	Wire Gauge	Fuse Size
2 3/8" x 4 1/4"	~4 ft.	20 AWG	2 Amp Mini

CAUTION

Check the area beneath where the Charging Cradle will be mounted to ensure there are no hoses, wires, lines, tanks or other sensitive components.

DRILL MOUNTING HOLES

STEP 1 Choose a flat surface with adequate space to mount the **Charging Cradle** 23 .

STEP 2 Lay mounting template in place, mark and drill routing hole for power wire using a **7/32" Drill Bit**.

STEP 3 Mark and Drill mounting holes for **Screws** 9 using a **7/64" Drill Bit**.

IMPORTANT! If installing to gel-coat, follow the drilling procedure in **Appendix A** (p.33) to ensure you do not crack or chip the gel-coat.

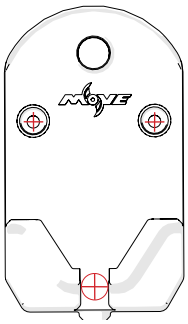

INSTALLING THE **REMOTE CHARGING CRADLE**

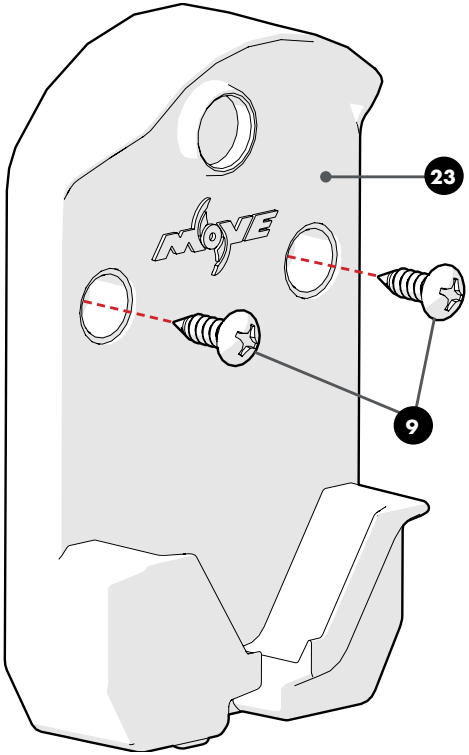

INSTALL CHARGING CRADLE

Using a **#2 Phillips Head Screwdriver**, install (2) **#8 x 1/2" Screws** 9 and tighten snug.

CONNECT TO POWER

NOTICE: Follow **Appendix B** (p. 33) for proper ring terminal and butt connector installation procedures.

STEP 1 Route wire to power.

STEP 2 Attach the **Fuse Holder** 13 to the positive lead from the **Charging Cradle** 23 using **Butt Connector** 12 .

STEP 3 Depending on post size, attach the appropriate **Ring Terminals** 10 or 11 and connect to power, connecting the positive (+) lead to the positive post and negative (-) lead to the negative post.

NOTICE: All Move accessories are compatible with 12v, 24v, and 36v systems.

CONNECTING the MOVE

All MOVE models are designed to work with 24 and 36 volt systems and will automatically adjust for your battery setup.

IMPORTANT CONNECTION INFORMATION

For safety and compliance reasons, we recommend that you follow American Boat and Yacht Council (ABYC) standards when wiring your boat. These instructions are meant to serve as a general guide for connecting your MOVE to power. If you have questions, contact our Customer Service Team at **+1(813) 689-9932 option 2** or visit our website at **www.power-pole.com**.

READ BEFORE INSTALLING

- The MOVE is compatible with all battery types. However, for best results use deep cycle marine batteries.
- To extend the life of your batteries and avoid premature battery failure, charge them within 12-24 hours of use.
- Use the Power-Pole CHARGE in conjunction with your trolling motor batteries for even longer-lasting performance.
- Ensure all battery terminals are clean and free from corrosion before installing.

WARNING

Never connect the positive (+,POS) and negative (-,NEG) terminals of the same battery together. Take care that no metal object falls onto the battery and shorts the terminals. It might spark or short-circuit battery or other electrical component that may cause explosion.

For safety reasons, do not turn the trolling motor on until the propeller is in the water.

- For safety reasons, disconnect the trolling motor from the battery or batteries when the motor is not in use or while the battery/batteries are being charged.
- Improperly connecting the trolling motor to a 24/36 volt system could cause battery explosion.
- Always make sure leadwire connections are tight and secure to battery terminals.
- Make sure batteries are in a well-ventilated compartment.

CAUTION

Please read the following information before connecting your trolling motor to your batteries to avoid damaging the trolling motor and/or voiding the warranty.

These guidelines apply to the general rigging to support your Power-Pole MOVE trolling motor. Powering multiple motors or additional electrical devices from the same power circuit may impact the recommended conductor gauge and circuit breaker size. If your wire extension length is greater than 25 ft., we recommend you contact a Certified Warranty Center or Customer Service.

An over-current protection device (circuit breaker or fuse) must be used. Coast Guard requirements dictate that each ungrounded current-carrying conductor must be protected by a manually reset, trip-free circuit breaker or fuse. The type (voltage and current rating) of the fuse or circuit breaker must be sized accordingly to the trolling motor used.

24v WIRING

WARNING

Before proceeding, allow battery compartment to vent for at least 15 minutes. This allows any combustible gases that have built up in the compartment to escape.

Wiring with Two 12v Batteries Connected in Series

STEP 1 Read ALL safety warnings and precautions on p. 23 before installing the Move.

STEP 2 Install a connector cable to the negative (-) post of Battery 1 (high side) and positive (+) post of Battery 2 (low side).

STEP 3 Connect the positive (+) lead from the Move to the positive (+) post of Battery 1 (high side).

WARNING

The positive lead on a 24v setup MUST be wired through a **50 Amp Circuit Breaker**.

STEP 4 Connect the negative (-) lead from the Move to the negative (-) post of Battery 2 (low side).

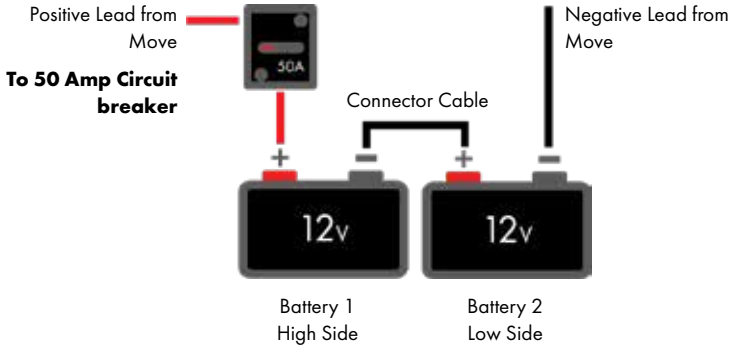

Wiring with a single 24v Lithium Battery

NOTE: The Move may also be wired to multiple 24v batteries wired in parallel.

STEP 1 Read ALL safety warnings and precautions on p. 23 before installing the Move.

STEP 2 Connect the positive (+) lead from the Move to the positive (+) post.

WARNING

The positive lead on a 24v setup MUST be wired through a **50 Amp Circuit Breaker**.

STEP 3 Connect the negative (-) lead from the Move to the negative (-) post.

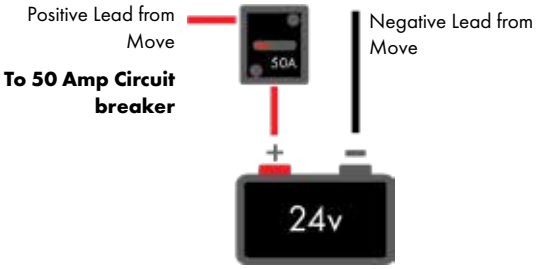

36v WIRING

WARNING

Before proceeding, allow battery compartment to vent for at least 15 minutes. This allows any combustible gases that have built up in the compartment to escape.

Wiring with Three 12v Batteries Connected in Series

STEP 1 Read ALL safety warnings and precautions on p. 23 before installing the Move.

STEP 2 Install a connector cable to the negative (-) post of Battery 1 (high side) and positive (+) post of Battery 2. Install another connector cable to the negative (-) post of Battery 2 and positive (+) post of Battery 3 (low side).

STEP 3 Connect the positive (+) lead from the Move to the positive (+) post of Battery 1 (high side).

WARNING

The positive lead on a 36v setup MUST be wired through a **60 Amp Circuit Breaker**.

STEP 4 Connect the negative (-) lead from the Move to the negative (-) post of Battery 3 (low side).

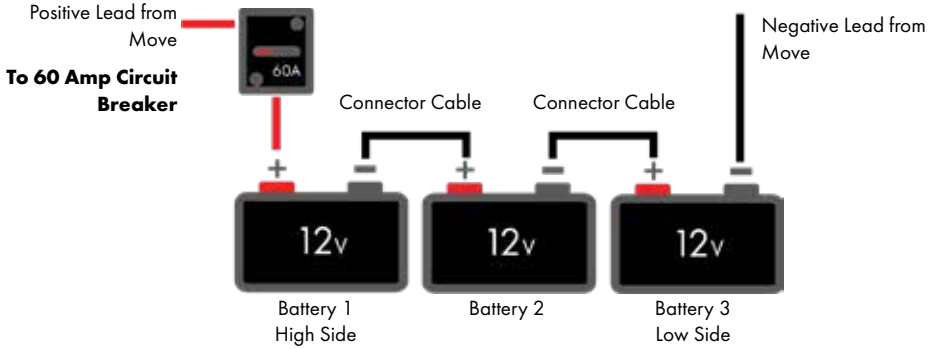

Wiring with a single 36v Lithium Battery

NOTE: The Move may also be wired to multiple 36v batteries wired in parallel.

STEP 1 Read ALL safety warnings and precautions on p. 23 before installing the Move.

STEP 2 Connect the positive (+) lead from the Move to the positive (+) post.

WARNING

The positive lead on a 36v setup MUST be wired through a **60 Amp Circuit Breaker**.

STEP 3 Connect the negative (-) lead from the Move to the negative (-) post.

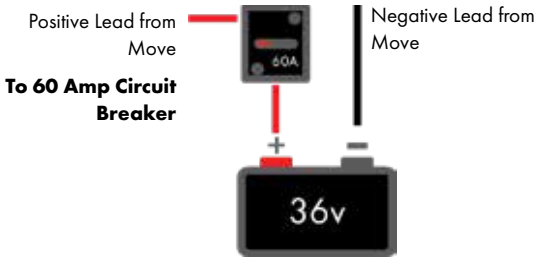

OPERATING the MOVE

Here's all the information you'll need on the functions, safe use, and maintenance of the MOVE. If you have questions, contact our Customer Service Team at **+1(813) 689-9932 option 2** or visit our website at **www.power-pole.com**.

TROLLING MOTOR TERMINOLOGY

WARNING

When stowing or deploying the motor, keep fingers clear of all hinges, pivot points and moving parts.

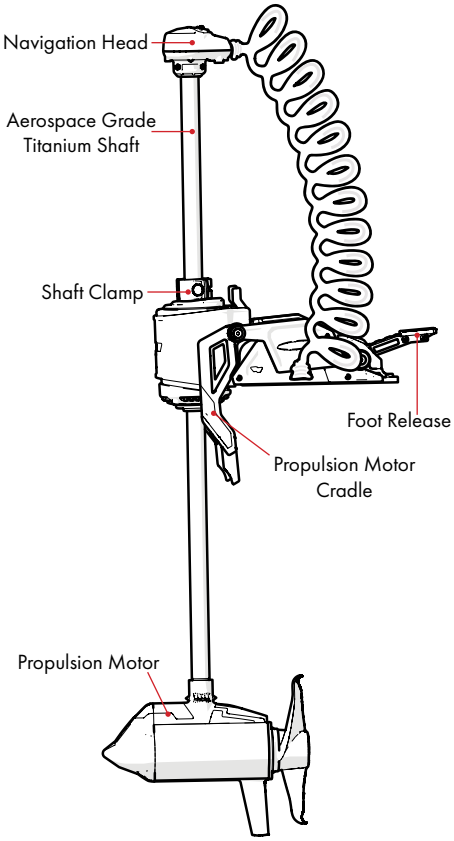

Navigation Head

The Navigation Head contains an internal compass and 3 LEDs: (Anchor Mode, Navigation heading, and Prop) which convey Move status information.
(Navigation Head LED diagram p. 24)

Aerospace Grade Titanium Shaft

The shaft was built to be as light and tough as possible and features a lifetime warranty.

Shaft Clamp

The Shaft Clamp is used to adjust the depth of the Propulsion Motor for operation.

Foot Release

The Foot Release is used to stow and deploy the trolling motor. Pressing down on the Foot Release will allow the Titanium Shaft to pivot into a stowed or deployed position.

Propulsion Motor Cradle

The Propulsion Motor Cradle holds the Propulsion Motor in place when the trolling motor is in the stowed position. It is uniquely designed to ensure the trolling motor is easy to stow and deploy.

Propulsion Motor

The Propulsion Motor is responsible for driving the Move. It features an ultra-quiet, efficient brushless motor.

STOWING AND DEPLOYING

WARNING

When stowing or deploying the Move, keep fingers clear of all hinges, pivot points and moving parts.

Pressing the **Foot Release** will activate the stow/deploy mechanism, allowing the unit to be stowed or deployed. When deploying, the **Propulsion Motor** will be locked into the **Propulsion Motor Cradle** until the shaft is rotated 90 degrees, at which point it can be lowered.

WARNING

NEVER attempt to operate the trolling motor until it is in its properly deployed position.

To put the Move into its stowed position. Push down on the **Foot Release**, pull the **Shaft** up until it locks into the **Propulsion Motor Cradle**, then rotate the **Shaft** until it is parallel with the Boat Deck and locks into place.

Any time the trolling motor is not in use, whether when operating the main motor or when trailering, the trolling motor must be placed in its proper, stowed position. To avoid damage to the unit, vessel, and/or passengers, follow the listed stowing procedure and parameters.

When stowing, make sure the **Propulsion Motor** is locked into the **Propulsion Motor Cradle** before running.

When the Move is in its properly-stowed position, the **Foot Release** will revert to its engaged position.

CAUTION

Failure to properly stow the trolling motor in accordance with parameters may result in damage to the shaft and/or other components on the unit.

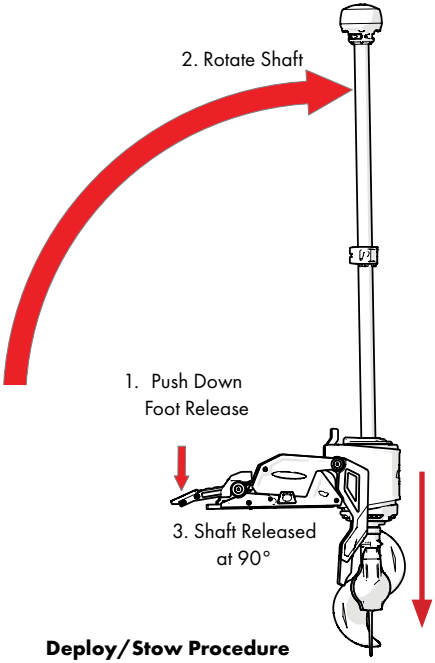

Deploy/Stow Procedure

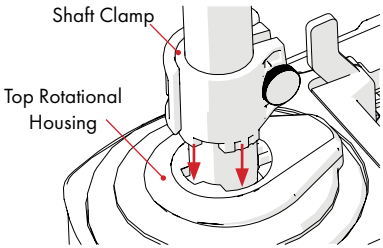

NOTICE: Make sure the Shaft Clamp Tabs lock into the grooves on the Top Rotational Housing.

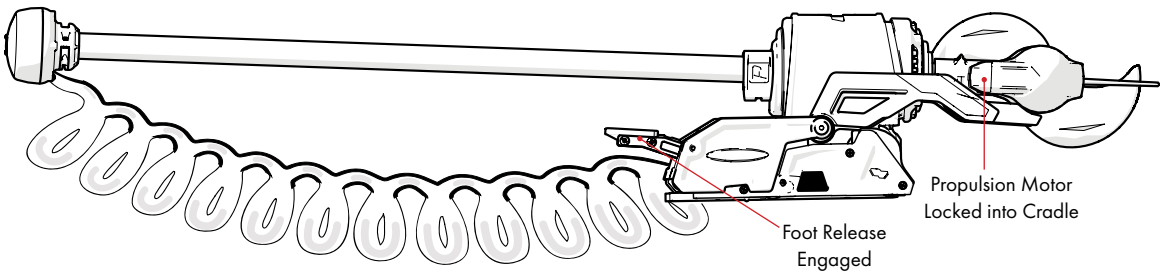

Properly Stowed Trolling Motor

ADJUSTING THE MOVE PV DEPTH

WARNING When stowing or deploying the Move, keep fingers clear of all hinges, pivot points and moving parts.

The Move's depth may be adjusted using the **Shaft Clamp** to ensure it stows properly or the **Propulsion Motor** is deep enough in the water for optimum performance.

STEP 1 While firmly grasping the **Shaft**, loosen the **Clamp Handle**.

WARNING Once the Clamp Handle has been opened the Propulsion Motor can freely fall, creating a pinching hazard between the Navigation Head and Die Cast Motor Housing

STEP 2 Slide the motor up or down until it is in the desired position.

NOTICE: For optimum operation, the Propulsion Motor must be at least 12" below the water's surface.

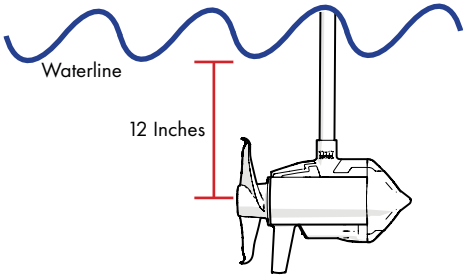

STEP 3 Clasp the **Clamp Handle** back into its original position.

STEP 4 If the **Shaft Clamp** does not hold the **Shaft** in place and keep it from sliding while the **Clamp Handle** is closed, open the **Clamp Handle** and tighten the **Thumb Screw**. Then, close the **Clamp Handle**.

IMPORTANT! The Shaft Clamp **MUST** be tight or the PV will not function properly.

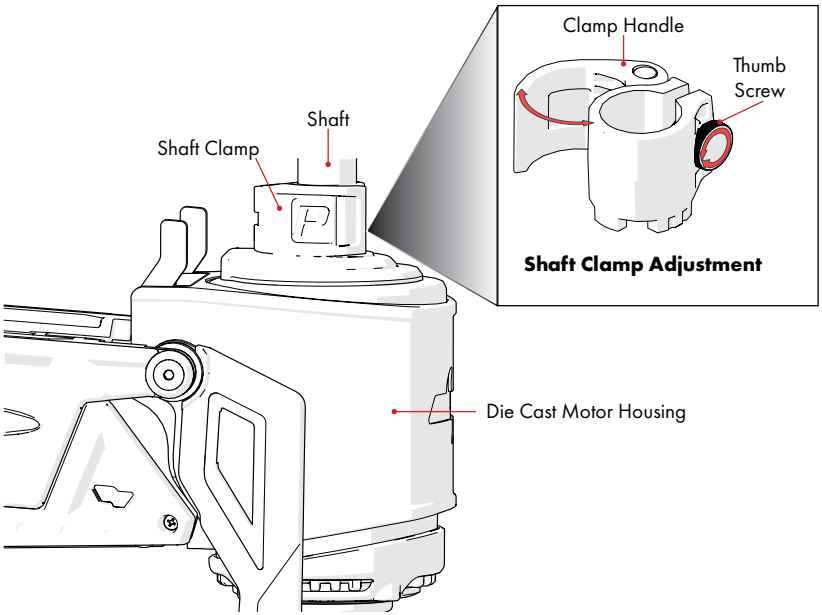

Depth Adjustment

FEATURES OVERVIEW

MOVE PV FEATURES TERMINOLOGY

ANCHOR MODE

Anchor Mode uses GPS to hold your boat in place, taking the current and wind into account. When Anchor Mode is on, the Anchor Mode LEDs on the Info Display and Navigation Head will be solid yellow. Anchor Mode can be turned on/off using the Hybrid Remote or Anchor Mode Foot Button.

- **Anchor Jog**
  When in Anchor Mode, the buttons on the Hybrid Remote with an Orange Dot (•) can be used to "Jog" the Move. Each time you tap one of these buttons, the Move will jog 5' in a corresponding direction.

NAVIGATION MODE

The Move has two navigation modes: **Compass Heading** and **Vector Heading**. Compass Heading is the default navigation mode. The default Navigation Mode can be changed in the app. Steering the Move when Navigation Mode is on will set a new heading. Navigation Mode can be set using the Hybrid Remote. In Navigation Mode, the Navigation Mode LEDs on the Info Display and Navigation Head will be solid Teal.

- **Compass Heading**
  In Compass Heading, the Navigation Head will always point in the exact direction it was set in. However, the wind and current will affect the course of your vessel.
- **Vector Heading**
  In Vector Heading, the Navigation Head will follow a set line from the exact direction it was set in. Unlike Compass Heading, in Vector Heading your vessel will follow a straight line regardless of what the wind and current are doing.

REVERSE

The prop will spin in reverse. The prop speed will be displayed on the Info Display and can be adjusted via the Hybrid Remote. The Prop Icon LEDs on the Info Display and Navigation Head will be solid orange. Reverse is pre-programmed to a set speed of 10. With Reverse engaged, the reverse speed can be changed using the and buttons on the Hybrid Remote. Once the unit has been taken out of Reverse mode, the most recent speed setting will be saved until the Move is turned off, at which point the reverse speed will revert back to10.

NOTICE: Only use reverse in open water or areas with soft vegetation that will not damage the trailing edge of the propeller.

NAVIGATION HEAD LEDs

LED	NAME	FUNCTIONALITY
	Anchor Lock	- Anchor Mode On
	Prop	-Prop On, Forward
		-Prop On, Reverse
	Navigation Mode	-Navigation Heading On

ADDITIONAL HEAD UNIT LED FUNCTIONS

All LEDs Flash TEAL: MOVE is in Pairing Mode
All LEDs Flash RED: Error (Check Info Display for More Information)
All LEDs Jog ORANGE: Update Downloading
All LEDs Jog YELLOW: Powering Up

Using the WIRELESS HYBRID REMOTE

HYBRID REMOTE FEATURES OVERVIEW

Remote Battery Level Indicator

The Hybrid Remote LED serves as a battery level indicator for the remote. When a button is pressed, the LED will flash either red, yellow or green, depending on the battery level (red being low, green being charged).

Charging the Hybrid Remote

The **Hybrid Remote** snaps into the **Charging Cradle**. It can be stored in the cradle or removed and used. To remove the remote, grab either side and firmly pull it from the cradle.

While charging, the LED on the remote will flash red if the battery is low, yellow at mid-charge, green when nearing full charge, and will shift to a solid green when fully charged.

Charging Temperature Constraints

To avoid damage, the Hybrid Remote will not charge in extreme hot or cold temperatures. If the remote LED displays solid red, it is over temperature (113°F). If it displays solid blue, it is too cold for charging (32°F).

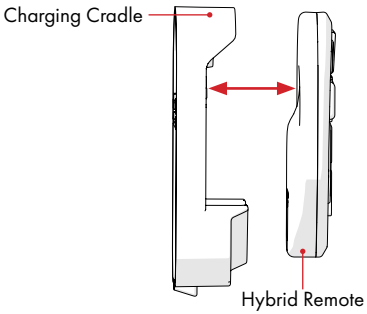

HYBRID REMOTE FEATURES OVERVIEW CONTINUED

Firmware Updates

If a firmware update is available, the next time the remote is plugged into the cradle it will be downloaded. While the update is downloading to the remote, the LED will slowly blink red. While the update is installing to the remote, the LED will flash red and green intermittently. When the update is installed, the LED will turn off.

Pairing Procedure

NOTICE: Remote must be within 2ft. of PV to initiate pairing.

All remotes come pre-paired to your MOVE. However, if you need to pair a remote, tap L and R at the same time. **This will open the six second pairing window** (The MOVE will constantly ring and the 3 LED's on the Head Unit will intermittently flash **TEAL**). Then, tap the ▼ and ▲ at the same time. The Move will beep twice, indicating the remote is now paired.

HYBRID REMOTE BUTTON FUNCTIONS

BUTTON	NAME	FUNCTIONALITY
	Anchor Mode	Tapping will put the Move into Anchor Mode. Tapping or will turn Anchor Mode off.
	Navigation Heading	Tapping will set a navigation heading. Tapping or will take the unit out of Navigation Heading Mode.
	Speed Up	Tapping will increase trolling motor speed. Speed will be displayed on the Info Display. For more information on the Info Display, see p. 26. This speed will apply to all unit functions and modes.
	Speed Down	Tapping will decrease trolling motor speed. It will be displayed on the Info Display. For more information on the Info Display, see p. 26. This speed will apply to all unit functions and modes.
L	Steer Left	Pressing and holding L will rotate the prop motor counter clockwise, steering the Move to the left. As soon as you let off L, prop motor will stop rotating.
R	Steer Right	Pressing and holding R will rotate the prop motor clockwise, steering the Move to the right. As soon as you let off R, prop motor will stop rotating.
	Reverse Prop	Tapping will put the Move into Reverse Mode. Tapping the and buttons while in reverse will change reverse speed. Tapping , , or will take the unit out of Reverse Mode.
▼	Anchor Down	Pressing and holding ▼ will deploy the anchor. Double tapping will auto deploy.
▲	Anchor Up	Pressing and holding ▲ will retract the anchor. Double tapping will auto retract.
	Prop On/ Off	Tapping will turn the prop on. It will stay on until is pressed again. If the Move is in Reverse Mode, tapping will shut the prop off.

READING THE **WIRELESS INFO DISPLAY**

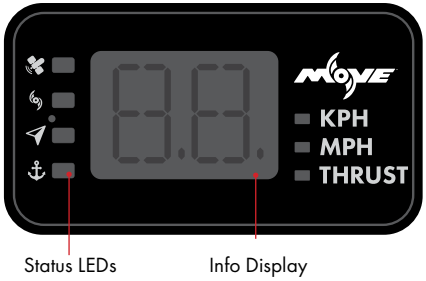

LED	NAME	FUNCTIONALITY
	GPS Signal	Solid Blue Good GPS Signal Flashing Blue Poor GPS Signal Flashing Yellow No GPS Signal
	Prop	Solid Green Prop On Solid Orange Reverse On
	Navigation Mode	Solid Teal Navigation Mode On
	Anchor Mode	Solid Anchor Mode On

INFO DISPLAY

The Info display is used to show a variety of information such as thrust/speed and error codes. The display will show thrust in an interval of 1-20 by default.

Motor propulsion speed can be controlled by thrust or KPH or MPH (Configurable in the app).

NOTICE: Depending on battery configuration and voltage, your speed setting may not go up to 20.

PAIRING PROCEDURE

The Info Display comes pre-paired to the Move. However, if you need to pair a display, wave a magnet up and down above the LEDs. **This will open a 10 second pairing window.** During this time, the display LEDs will flash as shown. Finally, tap the L and R on the remote at the same time, opening the pairing window on the Move. The display will beep twice, indicating it has been paired.

Pairing Window LEDs

POWER-POLE **APP**

POWER-POLE APP

While the Move is ready to be used out of the box, using the Move with the Power-Pole App creates an even better experience.

The new Power-Pole App gives you total control over every current Power-Pole product with continued support for upcoming products.

CONTROL

Control all your devices from the Power-Pole App using the Remote Feature. The app features a virtual remote with the same features available on the physical remote.

CONFIGURE

The Power-Pole App gives you unprecedented control over all of the Move's functions and accessories. Everything from the Propeller Acceleration rate to the Steering Aggressiveness can be adjusted and tuned to your exact needs.

Using the Power-Pole App with your Move makes for a truly tailored fishing experience.

MONITOR

Monitor the status of all your Power-Pole products all in one place. Easily find product status information including: connectivity, firmware version, Model, and Serial number.

DIAGNOSE

The Power-Pole app has a diagnosis feature built in to help our customer service team provide quick and effective solutions, allowing you to get back on the water as soon as possible.

UPDATE

We are constantly improving our products. Keeping your firmware up-to-date is a great way to ensure you're getting the most out of your Move. Using the Power-Pole App will ensure you never miss an update for your Move or any of its remotes.

MAINTENANCE AND STORAGE

Following these maintenance and storage tips will ensure you get the most use and longevity out of your Move trolling motor.

Mechanical Checks and Maintenance

- Never store the Move below 0°F.
- During extended periods of storage, storing the Move out of the elements will help to preserve finishes.
- To ensure long life and smooth operation, check the following locations to ensure they are properly greased. If no grease is present, apply all-purpose grease to the locations below.

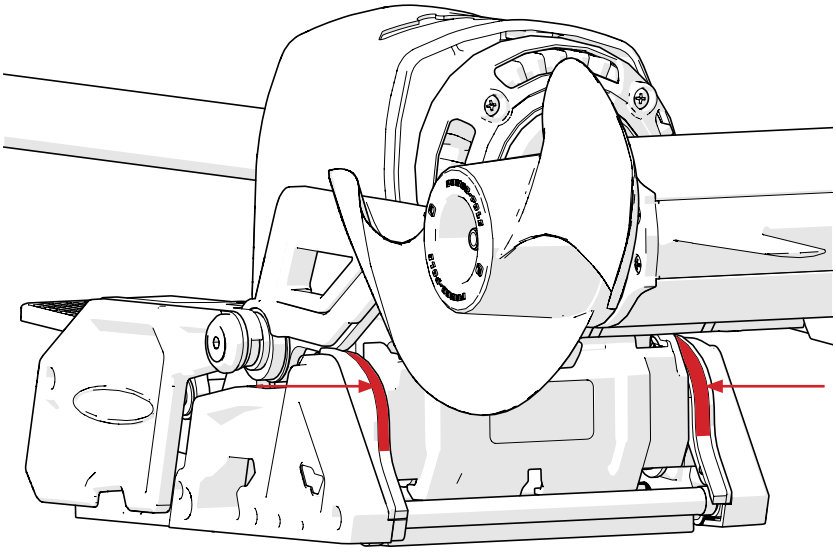

Grease Locations

Battery Maintenance and Checks

- Always wear appropriate safety gear such as gloves and glasses.
- Follow battery manufacturer's maintenance instructions.
- Inspect all battery connections. If loose, tighten battery connections.
- Check battery terminals for dirt, oil and battery corrosion. If dirty, clean terminals using a water and baking soda solution. Dry with a clean cloth. Be sure to follow directions specific to your battery manufacturer when cleaning.
- Check wires to see if any cuts or abrasions exist. Contact JL Marine Systems, Inc. at 1+(813) 689-9932 option 2 if any wire damage is found. Damaged cords can cause electric shock or electrocution.
- Inspect all batteries for any visible damage. This can include punctures, swelling, or warping of the batteries.

Yearly Checks and Maintenance

Once per year, inspect the Base PCB and apply dielectric if needed. Follow the steps below.

STEP 1 Using a **#2 Phillips Screwdriver**, remove the (2) **Screws** that attach the **Side Shrouds**.

STEP 2 Rotate the **Shrouds** so they are resting against the **Die Cast Motor Housing**.

STEP 3 Remove the (2) **Water Shield Clips** on each side of the **Water Shield** by squeezing them and pulling them upwards.

STEP 4 Remove the **Water Shield**.

STEP 5 Using a **#2 Phillips Screwdriver**, remove the (6) **Screws** that hold the **Power Cord**, **Coil Cord** and **Steering Wire** to the Base Board.

STEP 6 Liberally apply **Dielectric Grease** to the top of all terminals on the **Base PCB**.

STEP 7 Using a **#2 Phillips Screwdriver**, install the (6) **Screws** that hold the Power Cord, Coil Cord and Steering Wire to the Base Board. Tighten Snug

IMPORTANT! DO NOT pack grease into the terminal threads. This will damage the Base PCB.

STEP 8 Liberally apply **Dielectric Grease** to all terminals on the Power Cord, Coil Cord and Steering Wire.

STEP 9 Install the **Water Shield** into place.

STEP 10 Install the **Water Shield** and (2) **Water Shield Clips**.

STEP 11 Flip the **Shrouds** back down and reinstall the (2) **Screws**. Tighten to 10 in lbs. using a **#2 Phillips Screwdriver**.

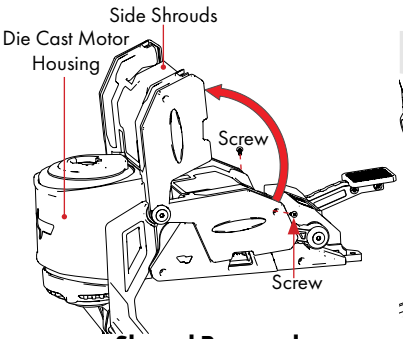

Shroud Removal

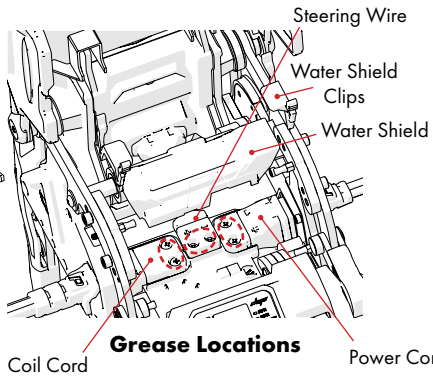

Grease Locations

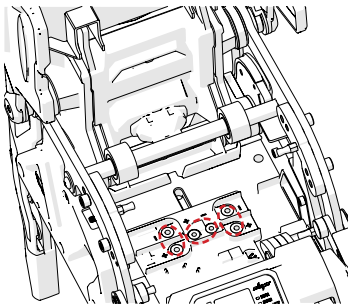

Grease Locations

FAQ'S

For Customer Service, please call +1(813) 689-9932 option 2.

Q: What circuit breaker size is needed for the Move?
A: If wiring to a 36v setup, a **60 amp circuit breaker** must be used. If wiring to a 24v setup a **50 amp circuit breaker** must be used. For more information on wiring, visit (p. 17-19).

Q: Can I wire my Move with multiple lithium batteries wired in parallel?
A: Yes. The Move can be wired to a bank of 24v or 36v lithium batteries wired in parallel. Follow diagrams below.

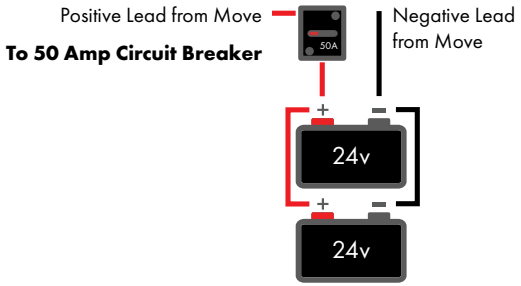

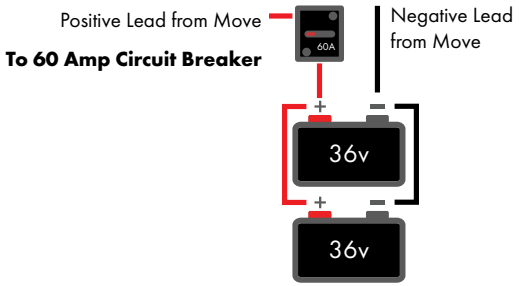

Q: How do I set up my Move for use with a 24v or 36v system?
A: The Move was uniquely designed to work with a 36v or 24v battery setup without any additional setup or programming. Just wire the trolling motor according to the instructions and your Move will be ready for use.

Q: Are there any performance differences between a Move wired to a 24v system and a Move wired to a 36v system?
A: A 24v system will max out around speed 17, while a 36v will max out at around speed 20 (these speeds are not guaranteed and may vary based on your battery condition). Amperage draw will also vary between a 24v and 36v system.

Q: Why does my display show a max speed, but then immediately drop without pressing a button?

A: This may happen with weak batteries. There may be enough voltage to display a higher speed, but once the motor begins drawing any power, the voltage may drop, changing the maximum achievable speed.

Q: Why does my Maximum speed drop as I use the trolling motor?
A: This depends on battery chemistry. With lithium batteries, your trolling motor will probably operate close to its top speed for the entire use cycle, then suddenly drop when the batteries die. With other battery types such as AGM or Lead Acid, your top speed will gradually decrease as your batteries are depleted.

Q: Does the Move come with a warranty?
A: The Move comes with a lifetime warranty on the shaft and a three-year warranty on all other components. For more warranty information, visit p. 5 of this manual.

Q: How much does the Move weigh?
A: Product weight varies from model to model. Visit **Appendix C** (p. 34) for more information on product weights.

Q: What is the amperage draw of the Move?
A: The amperage draw varies depending on thrust level and whether the Move is operating in a 24v or 36v configuration. More information on Amp draw can be found in **Appendix C (**p. 34). The Move is most efficient when operated at the thrust levels highlighted **Green**.

FAQ'S

Q: Why is Anchor Mode/Navigation Mode behaving erratically?

A: The GPS signal may be obstructed. Ensure there are no large pieces of metal near the head and no magnets within the vicinity. If there are magnets within a few feet of the Navigation Head, it will interfere with the GPS signal. If there is nothing obstructing the signal, you may need to recalibrate your Navigation Head Circuit Board. This can be done in the Power-Pole App.

Q: Why is Anchor Mode too aggressive/not aggressive enough?

A: Anchor Mode is configurable in the Power-Pole App. Also, for best operation, make sure the Propulsion Motor is at least 12" below the water's surface.

Q: I don't have Power-Pole Shallow Water Anchors, why are there buttons on the remote?

A: Most avid anglers find that having a combination of a GPS trolling motor and shallow water anchors allow for optimum boat control while chasing fish in a variety of conditions. The team of anglers at Power-Pole wanted one remote to control all of the Power-Pole accessories on their boat, so the anchor buttons were integrated into the remote.

Q: Why is my display showing a random number?

A: The Move is most likely either updating or the display is relaying an error code.

Q: Will the Move drain my batteries when not in use?

A: As with any device, it is recommended to either turn off the main power cutoff switch or disconnect from power when not in use. The Move's accessories do have a slight power draw. For more information see **Appendix C** (p. 34).

COMPLIANCE STATEMENTS

General Statement (for all devices)
Warning: Changes or modifications to this device not expressly approved by JL Marine Systems, Inc. could void the user's authority to operate the equipment.

FCC Specific Statement
NOTE: This equipment has been tested and found to comply with the limits for a Class B digital device, pursuant to Part 15 of the FCC Rules. These limits are designed to provide reasonable protection against harmful interference in a residential installation. This equipment generates, uses, and can radiate radio frequency energy and, if not installed and used in accordance with the instructions, may cause harmful interference to radio communications. However, there is no guarantee that interference will not occur in a particular installation. If this equipment does cause harmful interference to radio or television reception, which can be determined by turning the equipment off and on, the user is encouraged to try to correct the interference by one or more of the following measures:

- Reorient or relocate the receiving antenna.
- Increase the separation between the equipment and receiver
- Connect the equipment into an outlet on a circuit different from that to which the receiver is connected
- Consult the dealer or an experienced radio/TV technician for help

FCC Part 15.19 Warning Statement – (Required for all Part 15 devices) THIS DEVICE COMPLIES WITH PART 15 OF THE FCC RULES. OPERATION IS SUBJECT TO THE FOLLOWING TWO CONDITIONS: (1) THIS DEVICE MAY NOT CAUSE HARMFUL INTERFERENCE, AND (2) THIS DEVICE MUST NOT ACCEPT ANY INTERFERENCE RECEIVED, INCLUDING INTERFERENCE THAT MAY CAUSE UNDESIRED OPERATION.

FCC Part 15.21 Warning Statement – NOTE: THE GRANTEE IS NOT RESPONSIBLE FOR ANY CHANGES OR MODIFICATIONS NOT EXPRESSLY APPROVED BY THE PARTY RESPONSIBLE FOR COMPLIANCE. SUCH MODIFICATIONS COULD VOID THE USER'S AUTHORITY TO OPERATE THE EQUIPMENT.

FCC/ISED RF Exposure
ENGLISH: This equipment complies with radiation exposure limits set forth for an uncontrolled environment. This equipment is in direct contact with the body of the user under normal operating conditions. The transmitter must not be co-located or operating in conjunction with any other antenna or transmitter.

FRENCH: Cet équipment est conforme aux limites d'exposition aux radiations dans un environment non controle. Cet équipment est en contact direct avec le corps de l'utilisateur dans des conditions de fonctionnement normales. Cet émetteur ne doit pas être co-localisées ou opérant en conjunction avec tout autre antenne ou transmetteur.

ENGLISH: This device complies with Industry Canada license-exempt RSS standard(s). Operation is subject to the following two conditions: (1) this device may not cause interference, and (2) this device must not accept any interference, including interference that may cause undesired operation of the device.

FRENCH: Le présent est conforme aux CNR d'Industrie Canada applicables aux appareils radio exempts de license. L'exploitation est autorisée aux deux conditions suivantes: (1) l'appareil ne doit pas produire de brouillage, et (2) l'utilisateur de l'appareil doit accepter tout brouillage radioélectrique subi, même si le brouillage est susceptible d'en compromettre le fonctionnement.

MODEL NUMBER	FCC ID:	IC:
MV-PV-45-BK	A7FEA144 Contains: SQGBL653	11454A-EA144 Contains: 3147A-BL653
MV-PV-52-BK	A7FEA144 Contains: SQGBL653	11454A-EA144 Contains: 3147A-BL653
MV-PV-60-BK	A7FEA144 Contains: SQGBL653	11454A-EA144 Contains: 3147A-BL653
MV-PV-72-BK	A7FEA144 Contains: SQGBL653	11454A-EA144 Contains: 3147A-BL653
MV-PV-45-WT	A7FEA144 Contains: SQGBL653	11454A-EA144 Contains: 3147A-BL653
MV-PV-52-WT	A7FEA144 Contains: SQGBL653	11454A-EA144 Contains: 3147A-BL653
MV-PV-60-WT	A7FEA144 Contains: SQGBL653	11454A-EA144 Contains: 3147A-BL653
MV-PV-72-WT	A7FEA144 Contains: SQGBL653	11454A-EA144 Contains: 3147A-BL653
MV-AC-INFO-DSPY	A7FEA142	11454A-EA142
MV-AC-RC-REMOTE	A7FEA131	11454A-EA131

APPENDICES

APPENDIX A Gel-Coat Drilling Procedure

WARNING

Always follow this procedure when drilling into the gel-coat of a boat. Failure to follow this procedure may result in chipping or cracking of your boat's gel-coat.

STEP 1 Cover the area that will be drilled with blue painter's tape.

STEP 2 Mark holes on masking tape with a fine-tip marker.

STEP 3 Drill a pilot hole with a drill bit that is 1/8" or less. Then, drill the hole again using a drill bit that is 1/16" larger. Repeat this process, increasing drill bit size by 1/16" until holes are the desired diameter.

APPENDIX B Wire Connection/Termination Procedure

TOOLS:

- Nitrile Gloves
- Wire Stripper
- Crimping Tool
- Heat Gun

WARNING

Always make sure power is shut off to the wires you are working with. NEVER attempt to attach a ring terminal or butt connector to a live wire.

STEP 1 Strip back the insulation on the wire(s) you will be connecting so around 1/4" of wire is exposed.

STEP 2 Twist all of the exposed wire ends and insert them into the Butt Connector or Ring Terminal.

IMPORTANT! Ensure no uninsulated wire is exposed past the end of the Heat Shrink.

STEP 3 Crimp the Butt Connector onto the wire using the Crimping Tool.

IMPORTANT! Check Ring Terminal or Butt Connector for any cuts from crimping and give the cables a slight tug to ensure they are properly crimped. Poorly crimped or damaged connectors will not provide a water-tight seal. This will lead to corrosion and wire failure.

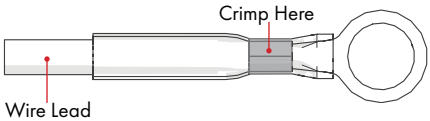

STEP 4 Use a Heat Gun to "shrink" the Heat Shrink of the Connector to the wire. Ensure no bubbles are present and the Connector has shrunk tightly to the insulation on the wire.

AMPERAGE DRAW AND THRUST PER LEVEL

THRUST LEVEL	THRUST (LBS.)	AMP DRAW 24v	AMP DRAW 36v
1	1	0.45	0.3
2	1.5	0.6	0.4
3	2	0.75	0.5
4	3.5	1.125	0.75
5	5	1.5	1
6	8	2.25	1.5
7	11	3	2
8	15.5	4.5	3
9	19	6	4
10	25	9	6
11	28	10.5	7
12	35	15	10
13	44	21	14
14	51	27	18
15	61	37.5	25
16	68	45	30
17	78	48	36
18	88		44
19	95		50
20	100		55

PRODUCT WEIGHT

MODEL	WEIGHT
45 PV	46 lbs.
52 PV	47 lbs.
60 PV	48 lbs.
72 PV	50 lbs.

NOTICE: Thrust levels highlighted in **Green** are the most efficient.

POWER DRAW OF ACCESSORIES

REMOTE	STATUS	12V	24V	36V
Charging Cradle	Standby	10mA	5mA	3mA
-	Charging	120mA	60mA	43mA

APPENDIX D Mounting the **MOVE PV** without the **QUICK RELEASE MOUNT**

TOOLS:

- Fine-tip Marker
- #2 Phillips Head Screwdriver
- #3 Phillips Head Screwdriver
- 7/16" Socket
- Ratchet
- Extension
- Electric Drill
- 5/16" Drill Bit

ADDITIONAL REQUIRED HARDWARE:

- (6) 1/4" x 20 Bolts
- (2) Additional 1/4" x 20 Nylon Lock Nuts (same as 4)
- (2) Additional 1/4", 1 1/4" Diameter, Stainless Steel Washers (same as 3)

IMPORTANT! If Mounting without using our Quick Release Mount, the customer is responsible for acquiring the proper mounting hardware.

NOTICE: If mounting to a Pulpit, all needed hardware and mounting instructions are included in the Pulpit Hardware Kit.

WARNING

Always disconnect power by turning the main battery cutoff switch to the off position before performing any installations.

REMOVE SHROUDS

STEP 1 Using a **#2 Phillips Screwdriver**, remove the (2) **Screws** that attach the **Shroud Assembly**.

STEP 2 Rotate the **Shroud Assembly** so it is resting against the **Die Cast Motor Housing**.

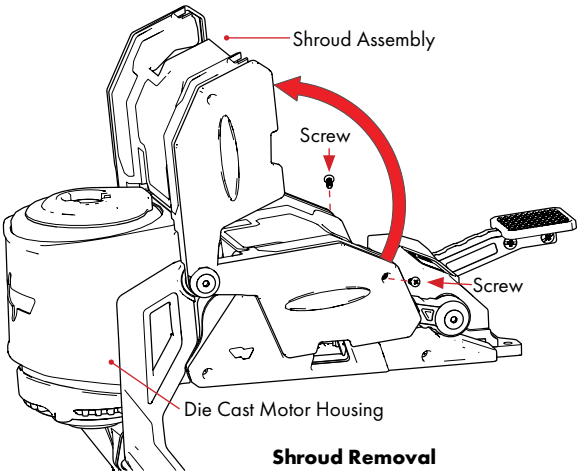

Shroud Removal

REMOVE SPRINGS

Remove the (2) **Springs**.

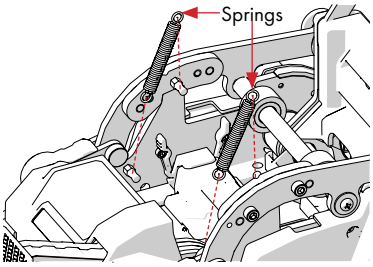

Spring Removal

APPENDIX D Mounting the **MOVE PV** without the **QUICK RELEASE MOUNT**

REMOVE HARDWARE

STEP 1 While holding the rear two **Flat Head Screws** with a **#3 Phillips Screwdriver**, loosen the **Hex Nuts** using a **7/16" Socket and Ratchet**. **FIG A**

STEP 2 Push down on and hold the **Foot Pedal** so the arms slide backward, allowing the additional (4) **Screws** to be accessed. **FIG B**

STEP 3 Repeat **STEP 1** for the remaining (4) screws. **FIG A**

NOTICE: You will need to use an extension to reach the front four nuts.

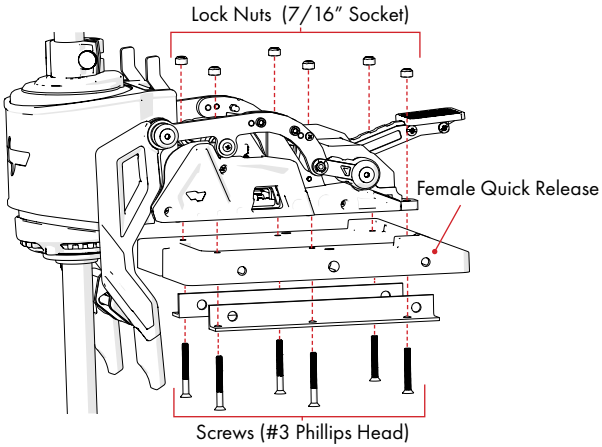

Figure A

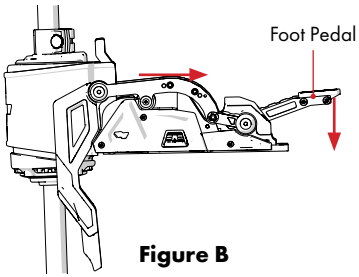

Figure B

DRILL PILOT HOLES

STEP 1 After reading the **SELECTING A MOUNTING LOCATION** (p. 10) use the included template to locate a suitable location for installing the Move PV.

STEP 2 Drill pilot holes using a **5/16" Drill Bit**.

CAUTION

Check the area beneath where the Quick Release will be installed to ensure there are no hoses, wires, lines, tanks or other sensitive components.

IMPORTANT! If installing to gel-coat, follow the drilling procedure in **Appendix A** (p. 33) to ensure you do not crack or chip the gel-coat.

APPENDIX D Mounting the **MOVE PV** without the **QUICK RELEASE MOUNT**

INSTALL MOUNTING HARDWARE

Line up the trolling motor base with the mounting holes. Have someone hold the trolling motor in place while you install the mounting hardware in order using a **7/16" Socket & Wrench**. Tighten hardware snug.

Hardware Order:

1. **Bolts**
2. **Boat Deck**
3. **Large Washers**
4. **Nylon Lock Nuts**

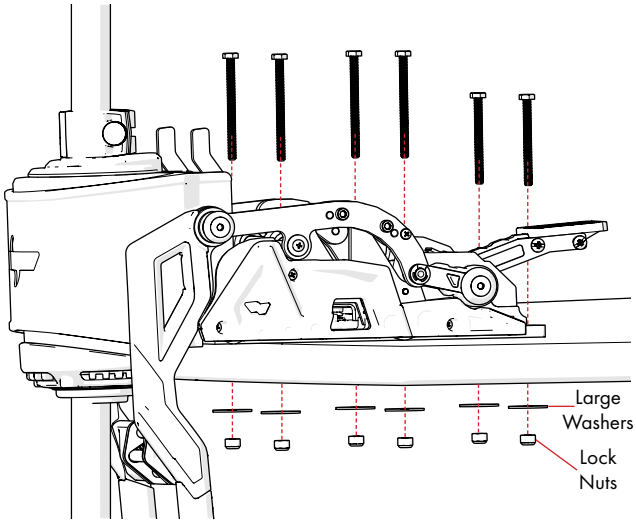

NOTICE:
- You will need to use an extension to reach the 4 longer Bolts.
- You will need to engage the Foot Release to reach the 4 longer Bolts.

INSTALL SPRINGS

Reinstall the (2) **Springs**.

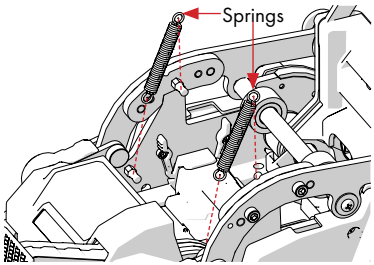

Spring Installation

INSTALL SHROUDS

STEP 1 Flip the **Shroud Assembly** down, ensuring the shrouds are interlocking not overlapping.

STEP 2 Install the **Screw** on each side of the unit. Using a **#2 Phillips Head Screwdriver**, tighten snug.

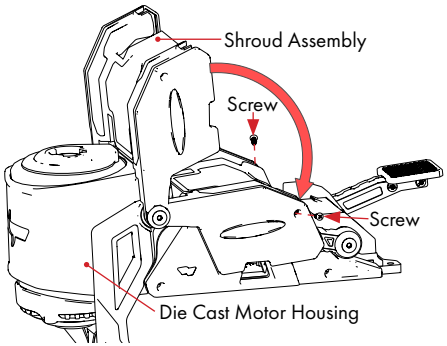

Shroud Installation

APPENDIX E Error Codes and Update LED Colors

DISPLAY ERROR CODES

ERROR CODE	DESCRIPTION
A2	Navigation Head Circuit Board not checked-in
A3	Steering Circuit Board not checked-in
A4	Propulsion Circuit Board not checked-in
A5	Steering Motor not checked-in
C1	No Steering Calibration
C2	No Navigation Head Circuit Board Compass Calibration
C3	No Base Circuit Board Compass Calibration
C4	Poor Navigation Head Circuit Board Compass Calibration
C5	Poor Base Circuit Board Compass Calibration
C6	Shaft slip detected
C7	Poor Steering Calibration
E0	Battery below 16v on power up; operation not possible
E1	Battery less than 10v; unit will turn off
E2	Base PCB solid state relay failed to turn on
E3	Low voltage on power up (possible short)
E4	Battery less than 16v during operation
E5	Electrolysis Detected
F1	Steering no current
F2	Steering over-current
F3	Steering stall
F4	Steering over temp
G2	Navigation Head Circuit Board Ping Test failure; poor communication
G3	Steering Circuit Board Ping Test failure; poor communication
G4	Propulsion Circuit Board Ping Test failure; poor communication
H1	Propulsion Motor Circuit Board over temp
H2	Propulsion Motor max RPM below expectation
L2	Poor Navigation Head Circuit Board Communication
L3	Poor Steering Circuit Board Communication
L4	Poor Propulsion Circuit Board Communication

APPENDIX E Error Codes and Update LED Colors

NAVIGATION HEAD AND INFO DISPLAY UPDATE LED COLORS

LED COLOR	DESCRIPTION
RED	Display Updating
GREEN	Base Circuit Board Updating
WHITE	Navigation Head Circuit Board Updating
MAGENTA	Steering Circuit Board Updating
TEAL	Propulsion Circuit Board Updating
YELLOW	Other Update

GETTING THE MOST OUT OF YOUR NEW MOVE™ ZR TROLLING MOTOR

The Move comes ready-to-use out of the box. However, here are a few suggestions to ensure you get the most out of your new trolling motor.

ENSURE SHAFT CLAMP IS PROPERLY TIGHTENED

If the **Shaft Clamp** is not properly tightened, the Move will not perform as intended. Check to make sure the **Shaft** does not freely rotate, but that the **Shaft Clamp** and **Bottom Rotational Housing** also rotate with the **Shaft**. If the **Shaft Clamp** is loose, turn the **Thumb Screw** clockwise to the desired tightness.

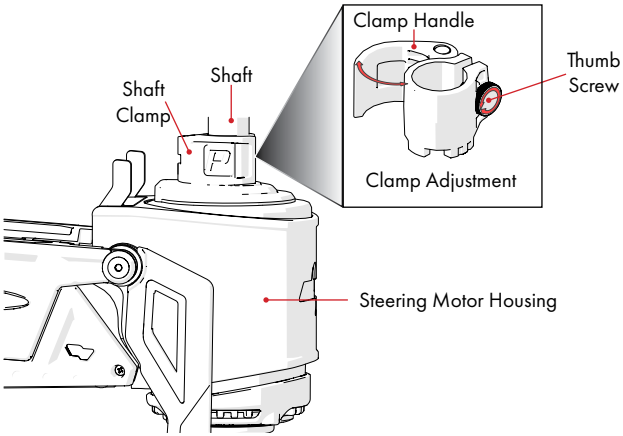

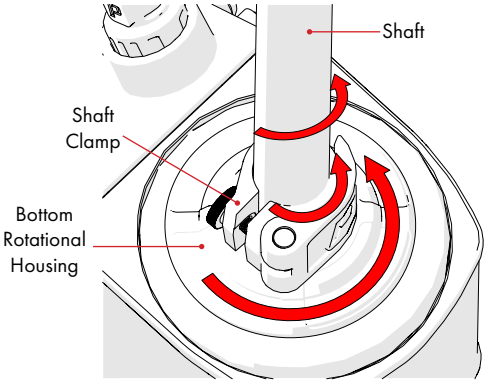

Properly Tightened Shaft Clamp

WHAT TO EXPECT FROM THE INITIAL STARTUP

The Info Display will flash in various patterns/colors while the LEDs on the Navigation Head "jog" back and forth. This is normal. The Move is ensuring all Circuit Boards are "checked in", error-free and ready for use. Once everything is checked in, the Navigation Head will ring and the Info Display will show GPS signal strength and speed setting.

APPENDIX F Initial Startup Procedure and Recommendations

CONNECT TO THE POWER-POLE APP

While the Move can be used without the use of our Power-Pole App, connecting to the app unlocks a variety of useful features and allows for a perfectly-tailored experience. Download the Power-Pole App from your device's App Store and follow the steps within the app to connect the Move.

SET THE BOW ANGLE OFFSET

Setting the bow angle offset will ensure your Move always points straight in line with your boat upon deployment. The bow angle offset can be set in the "Settings" tab of the app. Follow the in-app instructions to set your bow angle offset.

CALIBRATE THE BASE CIRCUIT BOARD

All Move Trolling Motors are factory calibrated and ready for use. However, when mounted near your electronics, they may need to be re-calibrated. For best results, recalibrate your Move's Base Circuit Board after installation. Base Board Calibration can be done in the "Settings" tab of the app. Follow the in-app instructions to calibrate your Base Circuit Board.

NOTES

POWER-POLE®

Need help? Contact our Customer Service Team at

+1813.689.9932 option 2

9010 Palm River Road, Tampa, Florida 33619
Phone 1+(813) 689-9932 Fax 1+(813) 689-8883
www.power-pole.com

JLMarine SYSTEMS, INC. ©2023 all rights reserved. Power-Pole Shallow Water Anchor.

28339619_V2.0