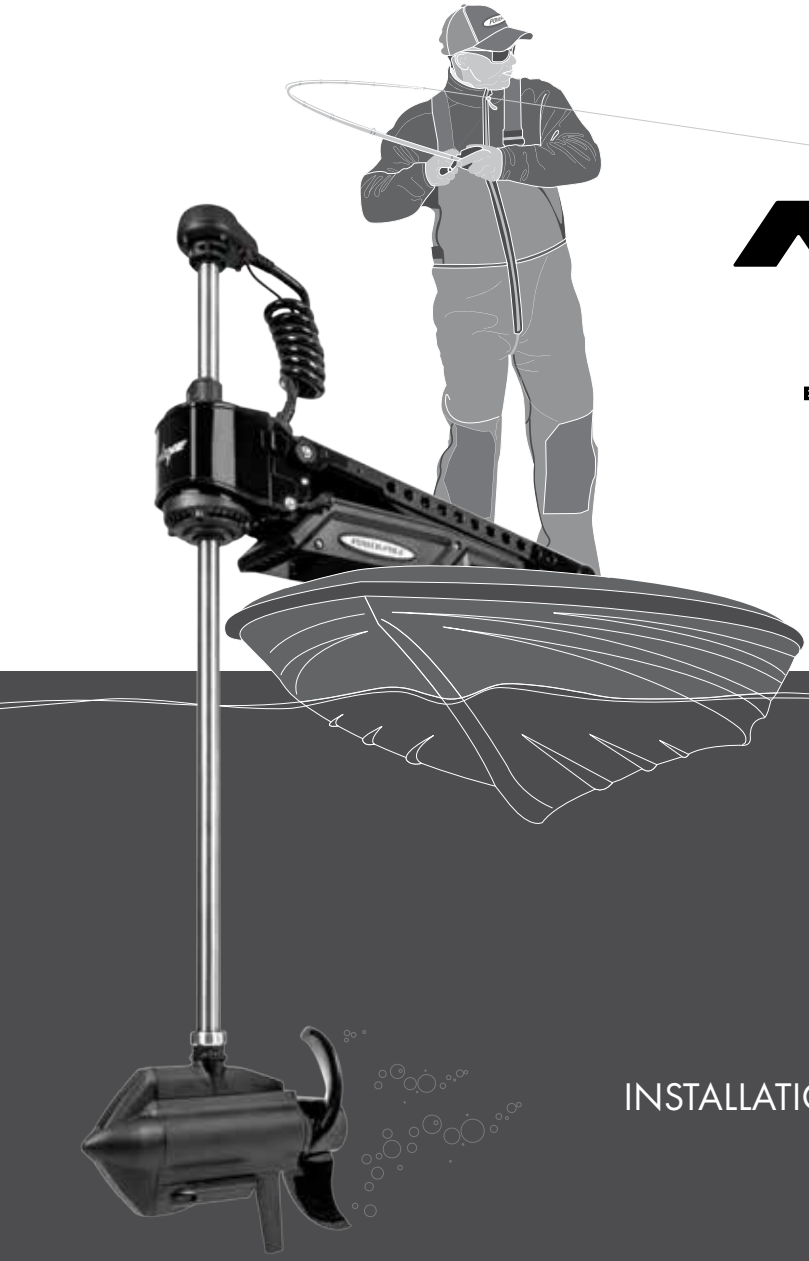

POWER-POLE®

MOVE™

BRUSHLESS TROLLING MOTOR

ZR

INSTALLATION & OWNER'S GUIDE

MODEL NUMBERS

MV-ZR-45-BK	MV-AC-FOOT-PDL
MV-ZR-52-BK	MV-AC-FS-ANCHOR
MV-ZR-60-BK	MV-AC-FS-HEAD
MV-ZR-45-WT	MV-AC-FS-REV
MV-ZR-52-WT	MV-AC-INFO-DSPY
MV-ZR-60-WT	MV-AC-RC-REMOTE

Powered by C-MONSTER® CONTROL SYSTEM

CONGRATULATIONS

on your purchase of the MOVE™

The first Trolling Motor from Power-Pole®, home of the original Shallow Water Anchor.

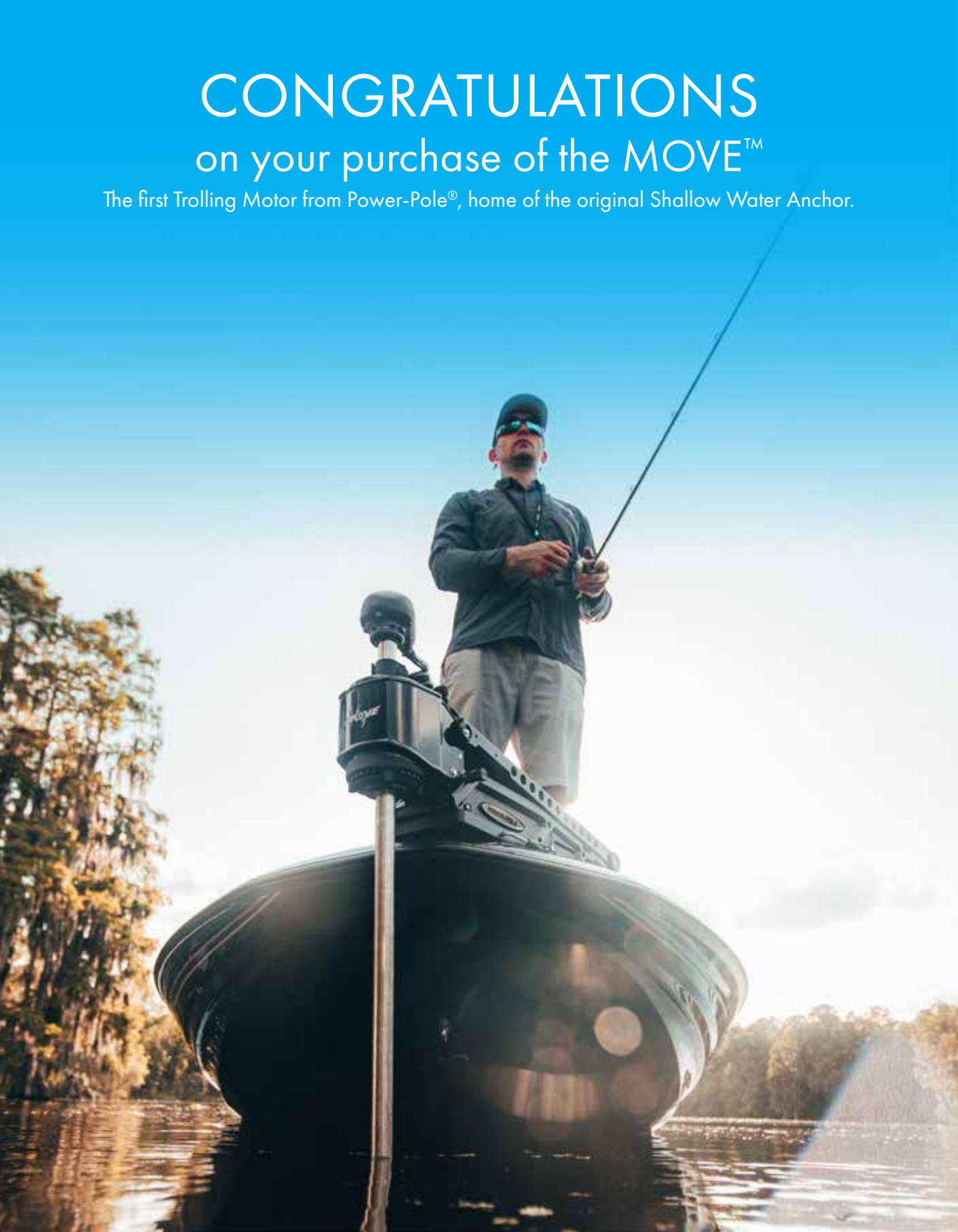

TABLE OF **CONTENTS**

REGISTER YOUR MOVE....4

WARRANTY INFORMATION....5

IMPORTANT SAFETY INFORMATION....6

INSTALLING THE MOVE

Parts List....7

Selecting a Mounting Location....10

Mounting the Move ZR....11

Routing the Transducer Cable....14

Installing the REAL-FEEL™ Wireless Foot Pedal....15

Installing the Wireless Info Display....17

Installing the Wireless Hybrid Remote Charging Cradle....19

Installing the Wireless Foot Buttons.... 21

CONNECTING THE MOVE

Important Connection Information....23

24v Wiring....24

36v Wiring....25

OPERATING THE MOVE

Trolling Motor Terminology....26

Stowing, Deploying and Adjusting....27

Features Overview....29

Navigation Head LEDs....30

Using the Wireless Hybrid Remote....30

Using the REAL-FEEL™ Foot Pedal....32

Using the Wireless Foot Buttons....33

Wireless Foot Button Battery Replacement....33

Reading the Wireless Info Display....34

Power-Pole App.... 35

MAINTENANCE AND STORAGE....36

FAQs.... 38

COMPLIANCE STATEMENTS....40

APPENDICES

Appendix A: Gel-Coat Drilling Procedure.... 41

Appendix B: Wire Connection/Termination Procedure....41

Appendix C: Tie-Down Strap Installation....42

Appendix D: Additional Product Information....43

Appendix E: Error Codes & Update LED Colors....44

Appendix F: Initial Startup Procedure and Recommendations....46

REGISTER YOUR MOVE™

LOCATE YOUR SERIAL NUMBER

There are two Serial Number Labels. One is located behind the Front Bumper; the other in-between the two Rear Bumpers next to the Base Circuit Board

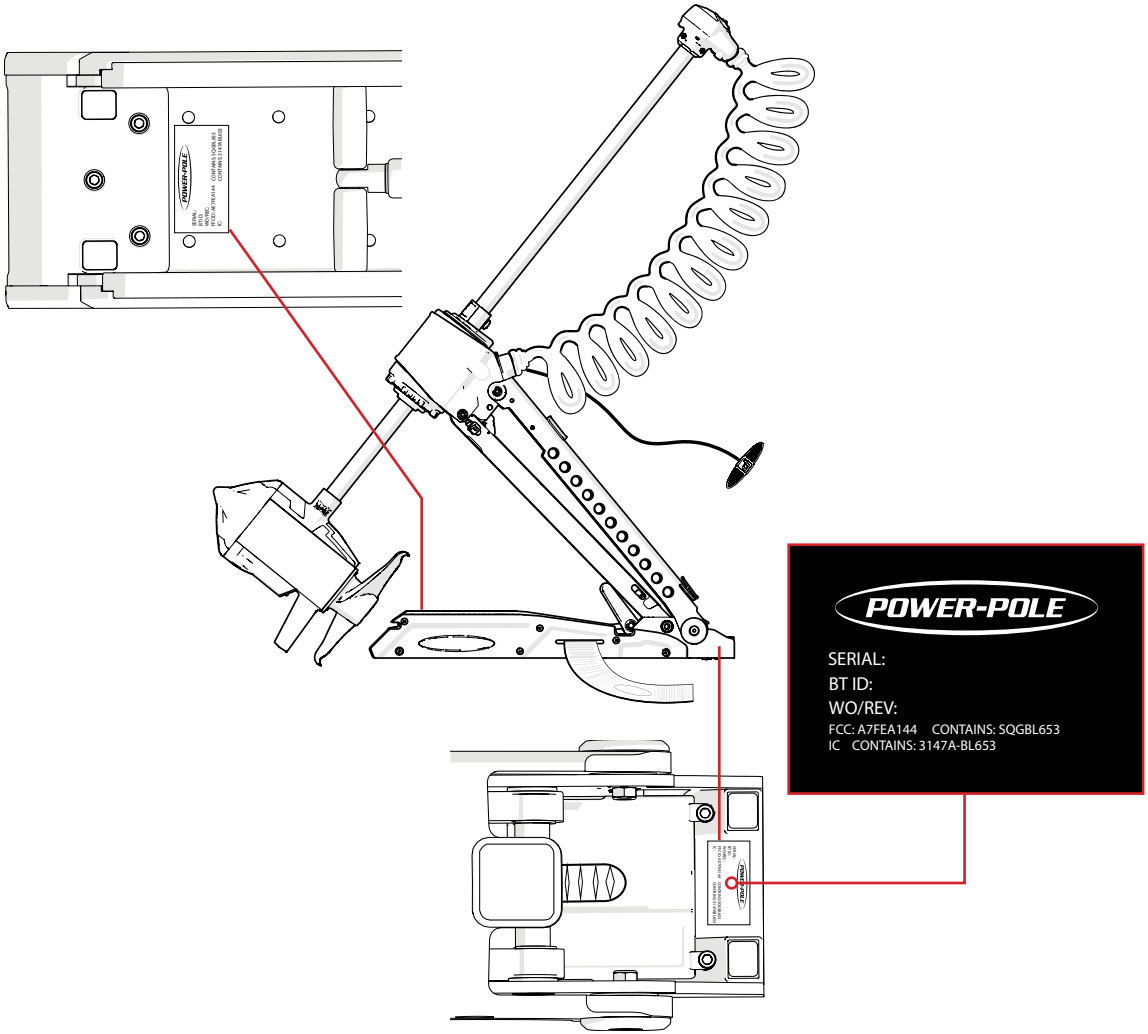

REGISTER YOUR MOVE

Be sure to register your Move on the Power-Pole App or by going to www.power-pole.com and creating an account. Once your trolling motor has been registered, our customer service team will be able to easily assist you with warranty claims.

WARRANTY INFORMATION

To find a Certified Warranty Center, visit www.power-pole.com.

The MOVE comes with a lifetime warranty on the shaft and a three-year warranty on all other components.

Conditions of this Warranty

A Move unit manufactured by JL Marine Systems, Inc. is warranted against defects in material and workmanship to the original end consumer from the original purchase date according to the following stipulations:

1. MOVE warranties are activated when product is registered online at **www.power-pole.com/register** or by using the Power-Pole app or upon receipt by JL Marine Systems, Inc. of a completed warranty card and dealer receipt/ proof of purchase, postdated within (10) days of the original purchase date. Please retain your sales receipt as proof of purchase.
2. Install Genuine Power-Pole Merchandise ONLY. This warranty is void if any non-authorized parts are used or installed.
3. This warranty is void if the Move is used commercially, structurally altered, or subject to stress beyond the physical limits of the manufactured material.
4. This warranty does not cover abrasion or abnormal abuse, nor does it cover the Power-Pole MOVE for anything other than its intended use.
5. JL Marine Systems, Inc. reserves the right to change products and designs without incurring any obligations to incorporate such changes in already completed products, or those in the hands of dealers or consumers. Products repaired or replaced under this warranty may or may not have these changes.

Shipping (Only applies to packages shipped within the Continental U.S.)

1. Parts which prove defective within (90) days from the date of purchase, JL Marine Systems, Inc. will pay for the replacement product shipping and handling fees to and from the JL Marine Systems, Inc. manufacturing plant or some other place which JL Marine Systems, Inc. might designate.
2. Parts which prove defective after (90) days but before (12) months from the date of purchase will also be repaired or replaced free of charge, but there may be a shipping charge to JL Marine Systems, Inc. manufacturing plant or some other place which JL Marine Systems, Inc. might designate.
3. Parts which prove defective after (12) months will also be repaired or replaced free of charge, but there may be a shipping and handling charge to and from the JL Marine Systems, Inc. manufacturing plant or some other place which JL Marine Systems, Inc. might designate.

THE WARRANTY CONTAINED HEREIN IS THE EXCLUSIVE WARRANTY MADE BY JL Marine Systems, Inc. AND THERE ARE NO OTHER WARRANTIES, EXPRESSED OR IMPLIED, INCLUDING A WARRANTY OF FITNESS FOR A PARTICULAR PURPOSE OR OF MERCHANTABILITY MADE WITH RESPECT TO SUCH TROLLING MOTORS. JL Marine Systems, Inc., IS NOT LIABLE FOR ANY INJURY OR MISHAPS SUSTAINED IN THE USE OF THIS PRODUCT. THE USER OF THIS PRODUCT ACKNOWLEDGES ASSUMED RISKS AND WAIVES ANY AND ALL CLAIMS AGAINST JL Marine Systems, Inc. AND ANY OF IT'S AGENTS.
This warranty applies under conditions of normal use. The warranty does not cover: 1) defects caused by improper assembly or disassembly; 2) defects occurring after purchase due to product modification, intentional damage, accident, misuse, abuse, negligence or exposure to corrosive elements; 3) cosmetic damage and 4) labor or assembly costs. Except as provided herein, JL Marine Systems, Inc. makes no express warranties, and any implied warranty, including without limitation any implied warranty of merchantability or fitness for a particular purpose, is limited in its duration to the duration of the written limited warranty set forth herein. Except as provided herein, JL Marine Systems, Inc. shall have no liability or responsibility to the purchaser or any other person or entity with respect to any liability, loss or damage caused or alleged to be caused directly or indirectly by use of the product, including, but not limited to, any incidental or consequential damages. Some states do not allow limitation on how long an implied warranty lasts or the exclusion of limitation of incidental or consequential damages, so the above limitation and exclusion may not apply to you. This warranty gives you specific legal rights. You may also have other rights which vary from state to state.

SUBMITTING A WARRANTY CLAIM

If you experience issues with your Move, you can file a warranty claim by calling our customer service team at **+1(813) 689-9932 option 2**. For the best service, have your Move serial number ready for a customer service representative.

IMPORTANT SAFETY INFORMATION

Please thoroughly read this Installation and Owner's Guide. Follow all instructions and heed all safety and cautionary notices. Use of this motor is only permitted for persons that have read and understood these instructions. Minors may use this motor only under adult supervision.

WARNING

- **You are responsible for the safe and prudent operation of your vessel.**
  We have designed the MOVE trolling motor to be a high-performance tool to enhance boat operation and improve your ability to catch fish. This product does not relieve you from the responsibility for safe operation of your boat. You must avoid hazards to navigation and always maintain a permanent watch so you can respond to situations as they develop. You must always be prepared to regain manual control of your boat. Learn to operate your MOVE trolling motor in an area free from hazards and obstacles.
- **Never run the motor out of the water, as this may result in injuries from the rotating propeller.**
  The motor should be disconnected from the power source when it is not in use or is off the water. When connecting the power-supply cables of the motor to the battery, ensure that they are not kinked or subject to chaffing and route them in such a way that persons cannot trip over them. Before using the motor, make sure that the insulation of the power cables is not damaged. Disregarding these safety precautions may result in electric shorts of battery(s) and/or motor. Always disconnect motor from battery(s) before cleaning or checking the propeller. Avoid submerging the complete motor as water may enter the lower unit through the control head and shaft.
- **Take care that neither you nor the other persons approach the turning propeller too closely, neither with body parts nor with objects.**
  The motor is powerful and may endanger you or injure you or others. While the motor is running watch out for persons swimming and for floating objects. Persons who lack the ability to run the motor or whose reactions are impaired by alcohol, drugs, medication, or other substances are not permitted to use this motor. This motor is not suitable for use in strong currents.
- **When stowing or deploying the motor, keep fingers clear of all hinge and pivot points and all moving parts.**
  In the event of unexpected operation, remove power-leads from the battery.
- **It is recommended to only use JL Marine approved accessories with your Move trolling motor.**
  Using non-approved accessories, including to mount or control your motor may cause damage, unexpected motor operation and injury. Be sure to use the product and approved accessories, including remotes, safely and in the manner directed to avoid accidental or unexpected motor operation. Keep all factory installed parts in place including motor and accessory covers, enclosures and guards.

INSTALLING THE MOVE ZR

WHAT'S IN YOUR BOX?

The **MOVE** comes ready to be installed right out of the box. No complicated assembly is required. We also included everything you need to have a great day on the water.

PARTS LIST

Label	DESCRIPTION	QTY.
1	Trolling Motor Assembly	1
2	Tie-Down Strap	1
3	TECHFLOW™ Propeller	1
	PROP NUT KIT (SA-0041)	
4	Nut, Nylon Locking Anode, 3/8-24, Assembly	1
5	Shear Pin	2
	MOVE ZR MOUNTING HARDWARE KIT (AVG-MA-0497)	
6	1/4" x 20, 2 3/4" Stainless Full-Thread Hex Head Bolt	6
7	1/4" Small Stainless Flat Washer	6
8	1/4" Rubber Washer	6
9	1/4" Large Stainless Flat Washer	6
10	1/4" Brass tall Nylon Lock Nut	2
	MOVE ZR ACCESSORY MOUNTING KIT (AVG-MA-0535) **Includes (1) AVG-MA-0534, (1) AVG-MA-0533, (1) AVG-MA-0532 and (1) AVG-MA-0536*	
11	Wireless Foot Button Mounting Screw	6
	WIRELESS INFO DISPLAY HARDWARE KIT (AVG-MA-0534)	
12	Wireless Info Display Base	1
13	Screw, Sheet Metal, Flat Head Phillips Drive	2
14	Heat Shrink Ring Terminal, 18-22 AWG, #10	2
15	Heat Shrink Ring Terminal, 18-22 AWG, 3/8"	2
16	Heat Shrink Butt Connector, 18-22 AWG	1
17	Fuse Holder, ATC, and ATO 18 AWG, Red Leads	1

PARTS LIST

Label	DESCRIPTION	QTY.
	WIRELESS HYBRID REMOTE CHARGING CRADLE HARDWARE KIT (AVG-MA-0533)	
18	#8 x 1/2" Panhead Sheet Metal Screw	2
19	Heat Shrink Ring Terminal, 18-22 AWG, #10	2
20	Heat Shrink Ring Terminal, 18-22 AWG, 3/8"	2
21	Heat Shrink Butt Connector, 18-22 AWG	1
22	Fuse Holder, ATC, and ATO 18 AWG, Red Leads	1
	REAL-FEEL™ WIRELESS FOOT PEDAL HARDWARE KIT (AVG-MA-0532)	
23	1/4" Thick Rubber Bushing	4
24	Small Stainless Steel Washer	4
25	#10 x 1 1/4" Pahnead Sheet Metal Screw	4
26	Heat Shrink Butt Connector, 14-16 AWG	1
27	Heat Shrink Ring Terminal, 14-16 AWG, #10	2
28	Heat shrink Ring Terminal, 14-16 AWG, 3/8"	2
29	Fuse Holder, ATC, and ATO, 14 AWG, Red Leads	1
	MOVE WIRING KIT (AVG-MA-0536)	
30	Heat Shrink Ring Terminal, 8 AWG, 1/4"	2
31	Heat Shrink Ring Terminal, 8 AWG, 3/8"	2
	ADDITIONAL ACCESSORIES	
32	Wireless Info Display	1
33	Active Heading Mode Wireless Foot Button	1
34	Anchor Mode Wireless Foot Button	1
35	Wireless Hybrid Remote	1
36	Wireless Hybrid Remote Charging Cradle	1
37	Lanyard	1
38	Pairing Magnet	1
39	Lowrance Transducer Adapter Cable (UNITS W/ TRANSDUCER ONLY)	1
40	REAL-FEEL™ Wireless Foot Pedal	1

PARTS LIST

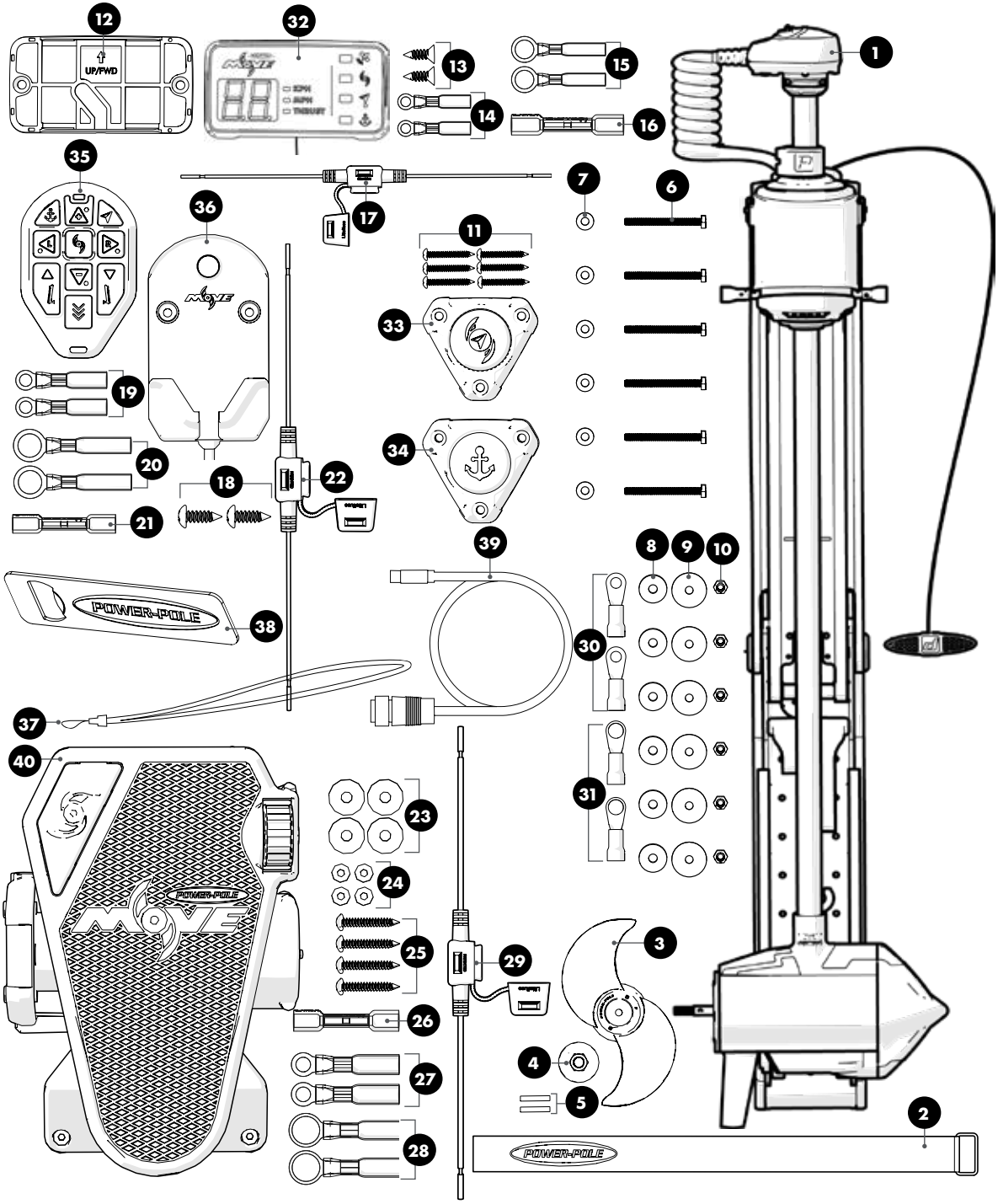

CHOOSING A **MOUNTING LOCATION**

IMPORTANT! These mounting instructions are deck mounting instructions. If you are mounting using our Universal Mounting Bracket, follow the instructions included with the Universal Mounting Plate.

Your MOVE™ includes all necessary mounting hardware for a deck mount. If mounting to a boat with pre-existing holes, consider using our Universal Mounting Plate, which fits most trolling motor drill patterns and allows installation without drilling more holes into your boat.

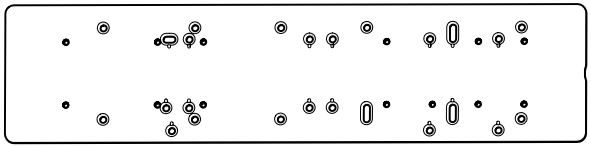

Universal Mounting Plate

To install the trolling motor directly to the boat deck read through the requirements below, then follow the instructions contained in the "MOUNTING THE **MOVE ZR**" section of this manual (p. 11).

Use the following parameters to locate a suitable mounting location:

- When deployed, the shaft should be as close to the center-line of boat deck as possible.
- Ensure there are no obstructions or sensitive components on or under the boat deck where the mounting hardware will be installed.
- When deployed, the ideal position of the shaft is at least 1″ off the gunwale/rub rail of the boat to ensure the shaft does not damage the gunwale/rub rail.
- Ensure there are no obstructions blocking the trolling motor from fully deploying and stowing.
- If mounting to a curved boat deck, ensure **Rubber Washers** 8 are used between the motor and deck.

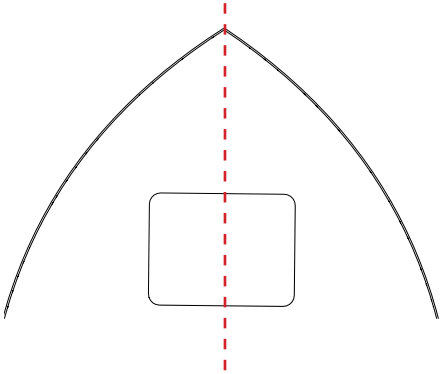

Centerline

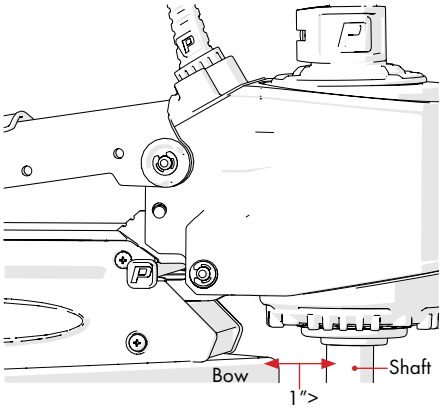

Shaft Clearance

MOUNTING THE **MOVE ZR**

TOOLS:

- Fine-tip Marker
- 9/16" Socket
- 7/16" Socket
- 7/16" Wrench
- Ratchet
- Electric Drill
- 5/16" Drill Bit
- Cable Ties (For Units with Transducer)

LABEL	DESCRIPTION	QTY.
6	1/4" x 20, 2 3/4" Stainless Full-Thread Hex Head Bolt	6
7	1/4" Small Stainless Flat Washer	6
8	1/4" Rubber Washer	6
9	1/4" Large Stainless Flat Washer	6
10	1/4" Brass tall Nylon Lock Nut	6
30	Heat Shrink Ring Terminal, 8 AWG, 1/4"	2
31	Heat Shrink Ring Terminal, 8 AWG, 3/8"	2
3	TECHFLOW™ Propeller	1
4	Nut, Nylon Locking Anode, 3/8-24, Assembly	1
5	Shear Pin	2
2	Tie-Down Strap	1

MOUNTING HARDWARE

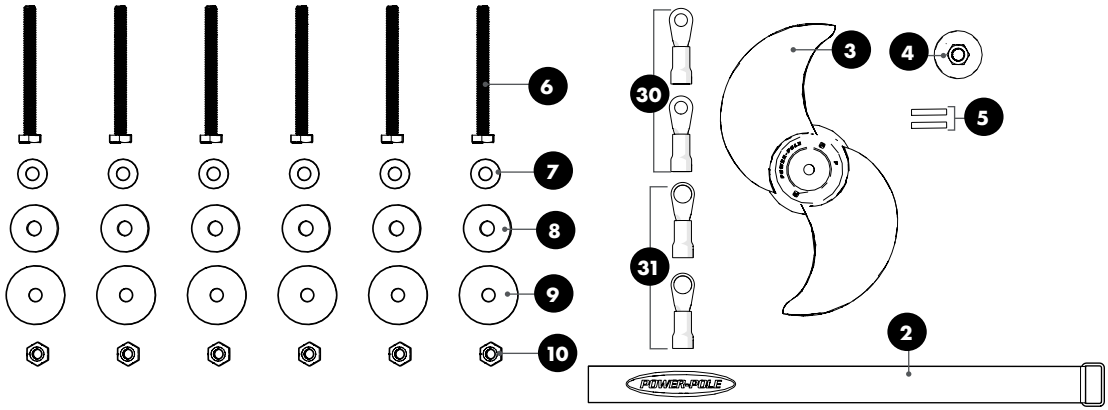

NOTICE: Follow **Appendix C** (p. 42) or instructions on installing the optional **Tie-Down Strap** 2 .

MOUNTING THE **MOVE ZR**

WARNING

Always disconnect power by turning the main battery cutoff switch to the off position before performing any installations.

DRILL PILOT HOLES

STEP 1 After reading **CHOOSING A MOUNTING LOCATION** and determining a mounting location based on those parameters, use the supplied drill template to mark mounting holes. It is required that you use all six **Bolts** 6 and spread them out as far as possible.

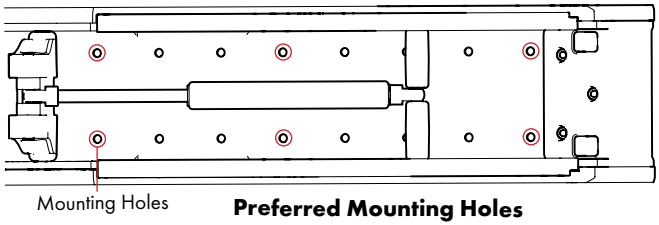

Preferred Mounting Holes

STEP 2 Drill pilot holes using a **5/16" Drill Bit**.

CAUTION

Check the area beneath where the **MOVE** will be installed to ensure there are no hoses, wires, lines, tanks or other sensitive components.

IMPORTANT! If installing to gel-coat, follow the drilling procedure in **Appendix A** (p. 41) to ensure you do not crack or chip the gel-coat.

INSTALL HARDWARE

Line up the trolling motor base with the mounting holes. Have someone hold the trolling motor in place while you install the mounting hardware in order using a **7/16" Socket & Wrench**. Tighten hardware snug.

1. (6) **Bolts** 6
2. (6) **1/4" Flat Washers** 7
3. (6) **Rubber Washers** 8 (If needed)
4. **Boat Deck**
5. (6) **Large Washers** 9
6. (6) **Nylon Lock Nuts** 10

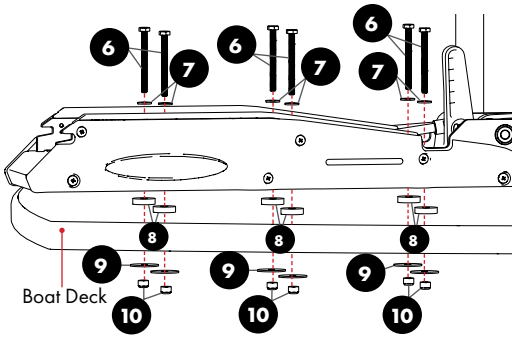

CAUTION

If installing to a boat deck that is not flat or has a bow/curve, washers 8 must be used.

INSTALL THE TECHFLOW™ PROPELLER

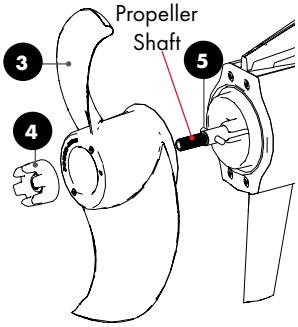

WARNING

NEVER attempt to install or remove the prop while the MOVE is connected to power.

DO NOT USE AN IMPACT WRENCH TO INSTALL THE ANODE ASSEMBLY

STEP 1 Install the **Shear Pin** 5 through the hole in the **Propeller Shaft**.

STEP 2 Line up the slot in the back side of the **Prop** 3 with the **Shear Pin** 5 and install it onto the **Propeller Shaft**.

STEP 3 Install **Anode Assembly** 4 onto the **Propeller Shaft** and tighten until snug with no play using a **9/16" Socket**.

CONNECT TO POWER

NOTICE: Follow **Appendix B** (p. 41) for proper ring terminal and butt connector installation procedures.

IMPORTANT! Before connecting the unit to power, you must read the **Connecting the Move** section (p. 23-25).

STEP 1 Route wire to power.

STEP 2 Depending on post size, attach the appropriate **Ring Terminal** 30 or 31 .

STEP 3 Proceed to the **Connecting the Move** section (p. 23), read all safety warnings, and follow the connection instructions for your trolling motor battery configuration.

TRANSDUCER CABLE ROUTING

STEP 1 Route the **Transducer Cable** through the center of the **Coil Cable**.

STEP 2 Route the **Transducer Cable** along the side of the **U-Channel**. Leave an additional 3-4" loop.

IMPORTANT! If you do not leave enough slack in the transducer cable, it will break when stowing, deploying or fully turning the unit.

STEP 3 Using a cable tie, attach the cable from the MFD to the **first** hole on the **U-Channel**. Repeat this process for every other hole on the **U-channel**.

IMPORTANT! **DO NOT** attach the cable to the last **two holes on ZR 45 Models** or **THREE HOLES on ZR 52 and 60 Models**. This will negatively affect the locking mechanism on the ZR.

STEP 4 Attach the connector from the MFD to the **Lowrance Transducer Adapter Cable** 39 and route to MFD.

CAUTION

If you fail to route the Transducer Cable as shown, it will be damaged when operating the unit.

IMPORTANT! Always attach the Transducer Cable to the to the side of the unit closest to the center line of the boat so the wire is not crossing over the unit, otherwise the wire may be damaged when stowing and deploying.

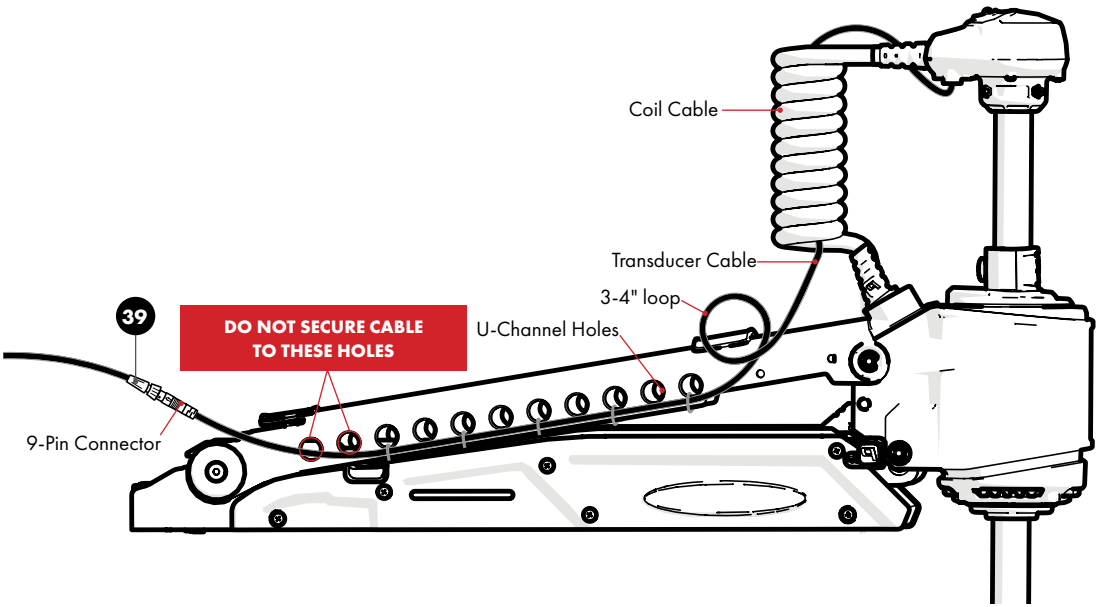

INSTALLING THE **REAL-FEEL™ FOOT PEDAL**

TOOLS:

- Fine-tip Marker
- Electric Drill
- 9/64" Drill Bit
- Phillips Head Bit

LABEL	DESCRIPTION	QTY.
40	REAL-FEEL™ Wireless Foot Pedal	1
23	1/4" Thick Rubber Bushing	4
24	Small Stainless Washer	4
25	#10 x 1 1/4" Panhead Sheet Metal Screw	4
26	Heat Shrink Butt Connector, 14-16 AWG	1
27	Heat Shrink Ring Terminal, 14-16 AWG #10	2
28	Heat Shrink Ring Terminal, 14-16 AWG, 3/8"	2
29	Fuse Holder, ATC, and ATO, 14 AWG, Red Leads	1

REAL-FEEL™ FOOT PEDAL HARDWARE

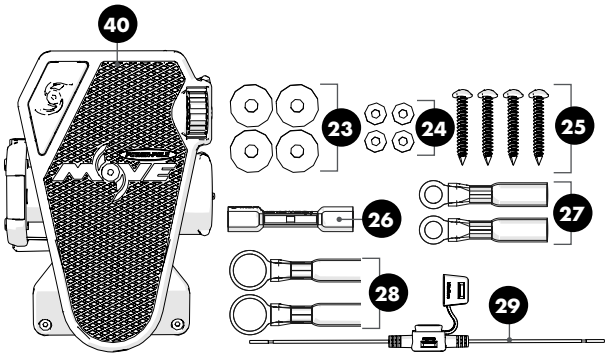

CAUTION

Check the area beneath where the Foot Pedal will be mounted to ensure there are no hoses, wires, lines, tanks, or other sensitive components.

Dimensions	Cord Length	Wire Gage	Fuse Size
8" x 11 3/4"	~5'	14 AWG	3 Amp Mini

IMPORTANT! If installing to gel-coat, follow the drilling procedure in **Appendix A** (p. 41) to ensure you do not crack or chip the gel-coat.

DRILL MOUNTING HOLES

STEP 1 Choose a flat surface with adequate space to mount the **Foot Pedal** 40 .

STEP 2 Using the included mounting template, mark and drill (4) pilot holes for **Mounting Screws** 25 using a **9/64" Drill Bit**.

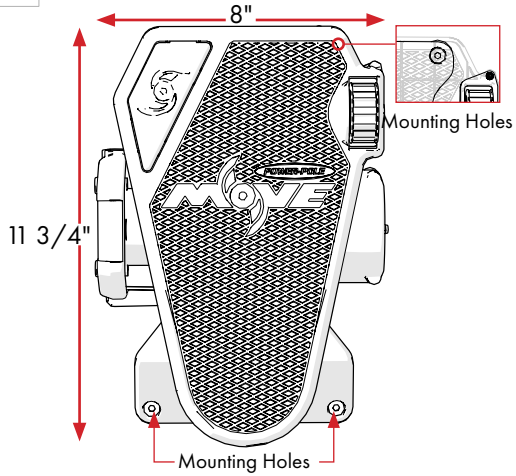

INSTALLING THE **REAL-FEEL™ FOOT PEDAL**

INSTALL MOUNTING HARDWARE

Using a **#2 Phillips Head Bit** and **Electric Drill**, install mounting hardware in order and tighten snug.

1. (4) **#10 x 1 1/4" Panhead Screws** 25
2. (4) **Washers** 24
3. **Foot Pedal** 40
4. (4) **Rubber Bushings** 23 *If Needed*

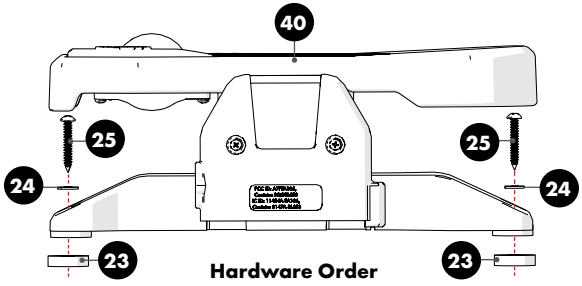

CAUTION

If installing to a boat deck that is not flat or has a bow/curve, washers 23 must be used.

CONNECT TO POWER

NOTICE: Follow **Appendix B** (p. 41) for proper ring terminal and butt connector installation procedures.

STEP 1 Route wire to power.

STEP 2 Attach the **Fuse Holder** 29 to the positive lead from the **Foot Pedal** 40 using **Butt Connector** 26 .

STEP 3 Depending on post size, attach the appropriate **Ring Terminal** 27 or 28 and connect to power, connecting the positive (+) lead to the positive post and negative (-) lead to the negative post.

NOTICE: All Move accessories are compatible with 12v, 24v, and 36v systems.

INSTALLING THE **WIRELESS INFO DISPLAY**

TOOLS:

- Fine-tip Marker
- Electric Drill
- 7/32" Drill Bit
- 7/64" Drill Bit
- Phillips Head Bit

LABEL	DESCRIPTION	QTY.
12	Wireless Info Display Base	1
32	Wireless Info Display	1
13	Screw, Sheet Metal, Flat Head Phillips Drive	2
14	Heat Shrink Ring Terminal, 18-22 AWG, #10	2
15	Heat Shrink Ring Terminal, 18-22 AWG, 3/8"	2
16	Heat Shrink Butt Connector, 18-22 AWG	1
17	Fuse Holder, ATC, and ATO, 18 AWG, Red Leads	1

INFO DISPLAY HARDWARE

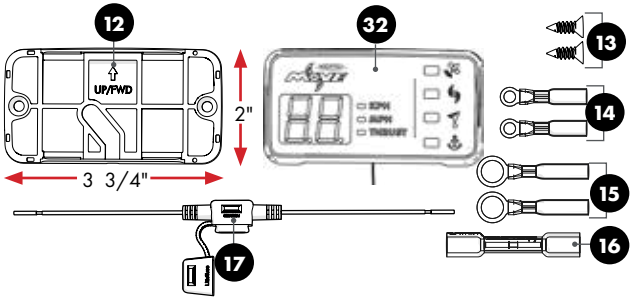

Check the area beneath where the Display will be mounted to ensure there are no hoses, wires, lines, tanks, or other sensitive components.

Dimensions	Cord Length	Wire Gauge	Fuse Size
2" x 3 3/4"	~4 ft.	20 AWG	2 Amp Mini

DRILL MOUNTING HOLES

STEP 1 Choose a flat surface with adequate space to mount the **Info Display** 32 .

STEP 2 Lay the mounting template in the desired mounting location and drill pilot holes for **Mounting Screws** 13 using a **7/64" drill bit**.

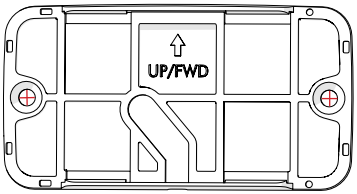

Mounting Holes

IMPORTANT! If installing to gel-coat, follow the drilling procedure in **Appendix A** (p. 41) to ensure you do not crack or chip the gel-coat.

PREFERRED INSTALLATION (Installing Wire Through Boat)

STEP 1 Using a **#2 Phillips Head Screwdriver**, install **(2) Screws** 13 and tighten until flush.

STEP 2 If running wire through boat surface, drill routing hole with a **7/32" Drill Bit**.

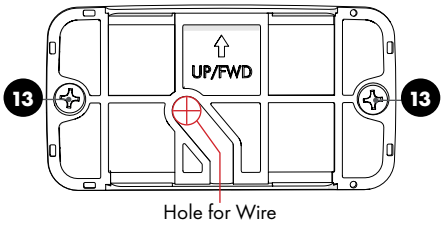

INSTALLING THE **WIRELESS INFO DISPLAY**

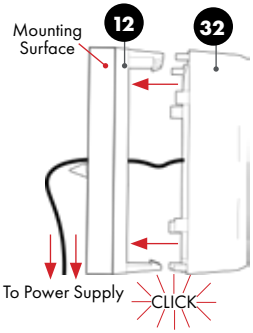

INSTALL AND CONNECT DISPLAY

(If Installing Wire Through Boat)

Route wire through hole and snap the **Info Display** 32 into place.

IMPORTANT! Once Display is snapped into place, it cannot be disassembled.

ALTERNATE ROUTING (Routing Wire out of Base)

STEP 1 Using a **#2 Phillips Head Screwdriver**, install **(2) Screws** 13 around halfway, so that you can still slightly pick up the base. **FIG 1**

STEP 2 Lift **Base** 12 and route the display wire through the hole in the bottom of the **Base** 12 . **FIG 1/2**

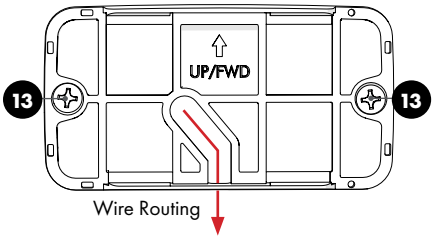

Figure 1

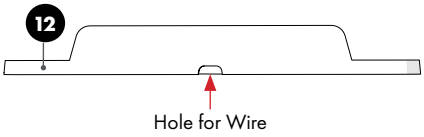

Figure 2

Base 12 **(Bottom View)**

STEP 3 Pull the wire all the way through the **Base** 12 so the end of the sheath is completely out of the **Base** 12 . **FIG 3**

STEP 4 Fully tighten **Screws** 13 snug, ensuring the sheath does not get pinched between the Mounting Surface and **Base** 12 .

STEP 5 Snap the **Info Display** 32 into place.

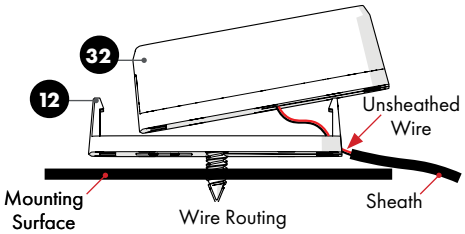

Figure 3

CONNECT TO POWER

NOTICE: Follow **Appendix B** (p. 41) for proper ring terminal and butt connector installation procedures.

STEP 1 Route wire to power.

STEP 2 Attach the **Fuse Holder** 17 to the positive lead from the **Display** 32 using **Butt Connector** 16 .

STEP 3 Depending on post size, attach either **Ring Terminals** 14 or 15 and connect to power, connecting the positive (+) lead to the positive post and negative (-) lead to the negative post.

NOTICE: All Move accessories are compatible with 12v, 24v, and 36v systems.

INSTALLING THE **REMOTE CHARGING CRADLE**

TOOLS:

- Fine-tip Marker
- Electric Drill
- 7/32″ Drill Bit
- 7/64″ Drill Bit
- #2 Phillips-Head Bit

LABEL	DESCRIPTION	QTY.
35	Wireless Hybrid Remote Control	1
36	Wireless Hybrid Remote Control Charging Cradle	1
18	#8 x 1/2" Panhead Sheet Metal Screw	2
37	Lanyard	1
19	Heat Shrink Ring Terminal, 18-22 AWG, #10	2
20	Heat Shrink Ring Terminal, 18-22 AWG, 3/8"	2
21	Heat Shrink Butt Connector, 18-22 AWG	1
22	Fuse Holder, ATC and ATO 18 AWG, Red Leads	1

HYBRID REMOTE AND CHARGING CRADLE HARDWARE

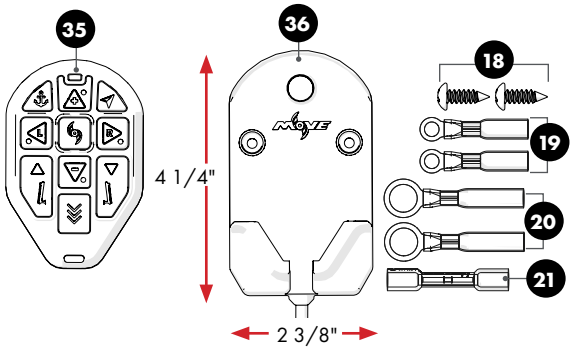

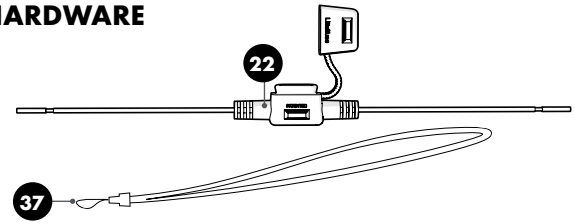

CAUTION

Check the area beneath where the Charging Cradle will be mounted to ensure there are no hoses, wires, lines, tanks, or other sensitive components.

Dimensions	Cord Length	Wire Gauge	Fuse Size
2 3/8" x 4 1/4"	~4 ft.	20 AWG	2 Amp Mini

DRILL MOUNTING HOLES

STEP 1 Choose a flat surface with adequate space to mount the **Charging Cradle** 36 .

STEP 2 Lay mounting template in place, mark and drill routing hole for power cable using a **7/32" Drill Bit**.

STEP 3 Mark and Drill mounting holes for **Screws** 18 using a **7/64″ Drill Bit**.

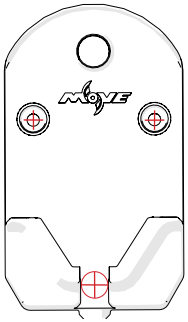

IMPORTANT! If installing to gel-coat, follow the drilling procedure in **Appendix A** (p. 41) to ensure you do not crack or chip the gel-coat.

INSTALLING THE **REMOTE CHARGING CRADLE**

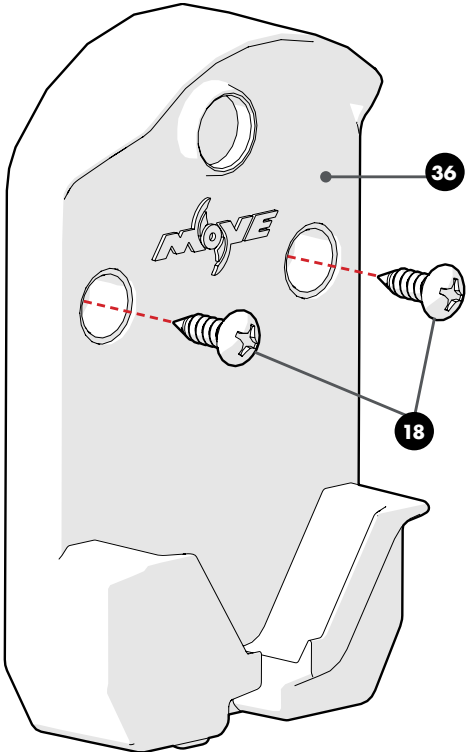

INSTALL CHARGING CRADLE

Using a **#2 Phillips Head Screwdriver**, install (2) **#8 x 1/2" Screws** 18 and tighten snug.

CONNECT TO POWER

NOTICE: Follow **Appendix B** (p. 41) for proper ring terminal and butt connector installation procedures.

STEP 1 Route wire to power.

STEP 2 Attach the **Fuse Holder** 22 to the positive (+) lead from the **Charging Cradle** 36 using **Butt Connector** 21 .

STEP 3 Depending on post size, attach the appropriate **Ring Terminals** 19 or 20 and connect to power, connecting the positive (+) lead to the positive post and negative (-) lead to the negative post.

NOTICE: All Move accessories are compatible with 12v, 24v, and 36v systems.

INSTALLING THE **FOOT BUTTONS**

TOOLS:

- Fine-tip Marker
- Electric Drill
- 7/64" Drill Bit
- #2 Phillips Screwdriver

LABEL	DESCRIPTION	QTY.
11	#8 x 1 1/4" Pan Head Sheet Metal Screw	6
33	Active Heading Wireless Foot Button	1
34	Anchor Mode Wireless Foot Button	1

FOOT BUTTON HARDWARE

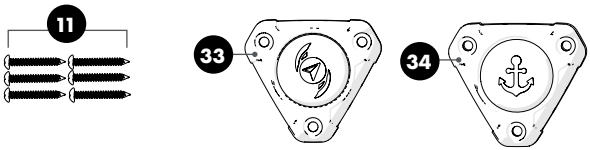

CAUTION

Check the area beneath where the Wireless Foot Button will be mounted to ensure there are no hoses, wires, lines, tanks, or other sensitive components.

STEP 1 Choose a flat surface with adequate space to mount the Foot Buttons.

STEP 2 Mark and drill holes using a Fine-tip Marker.

STEP 3 Drill mounting holes using a **7/64" drill bit**.

STEP 4 Install (**3**) **Screws** 11 and tighten snug using a **#2 Phillips Screwdriver**.

IMPORTANT! If installing to gel-coat, follow the drilling procedure in **Appendix A** (p. 41) to ensure you do not crack or chip the gel-coat.

NOTICE: Tapered Side (Toward User)

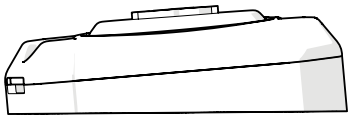

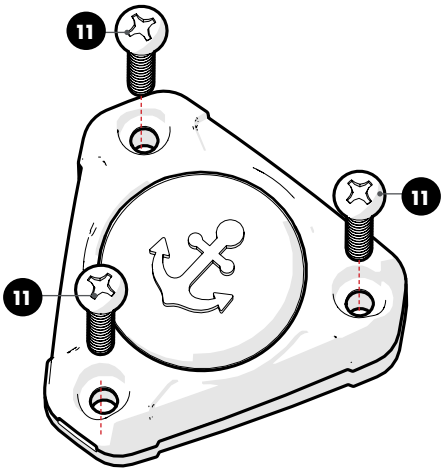

CONNECTING the MOVE

All MOVE models are designed to work with 24 and 36 volt systems and will automatically adjust for your battery setup.

IMPORTANT CONNECTION INFORMATION

For safety and compliance reasons, we recommend that you follow American Boat and Yacht Council (ABYC) standards when wiring your boat. These instructions are meant to serve as a general guide for connecting your MOVE to power. If you have questions, contact our Customer Service Team at **+1(813) 689-9932 option 2** or visit our website at **www.power-pole.com**.

READ BEFORE INSTALLING

- The MOVE is compatible with all battery types. However, for best results use deep cycle marine batteries.
- To extend the life of your batteries and avoid premature battery failure, charge them within 12-24 hours of use.
- Use the Power-Pole CHARGE in conjunction with your trolling motor batteries for even longer-lasting performance.
- Ensure all battery terminals are clean and free from corrosion before installing.

WARNING

Never connect the positive (+,POS) and negative (-,NEG) terminals of the same battery together. Take care that no metal object falls onto the battery and shorts the terminals. It might spark or short-circuit battery or other electrical component that may cause explosion.

For safety reasons, do not turn the trolling motor on until the propeller is in the water.

- For safety reasons, disconnect the trolling motor from the battery or batteries when the motor is not in use or while the battery/batteries are being charged.
- Improperly connecting the trolling motor to a 24/36 volt system could cause battery explosion.
- Always make sure leadwire connections are tight and secure to battery terminals.
- Make sure batteries are in a well-ventilated compartment.

CAUTION

Please read the following information before connecting your trolling motor to your batteries to avoid damaging the trolling motor and/or voiding the warranty.

These guidelines apply to the general rigging to support your Power-Pole MOVE trolling motor. Powering multiple motors or additional electrical devices from the same power circuit may impact the recommended conductor gauge and circuit breaker size. If your wire extension length is greater than 25 ft., we recommend you contact a Certified Warranty Center or Customer Service.

An over-current protection device (circuit breaker or fuse) must be used. Coast Guard requirements dictate that each ungrounded current-carrying conductor must be protected by a manually reset, trip-free circuit breaker or fuse. The type (voltage and current rating) of the fuse or circuit breaker must be sized accordingly to the trolling motor used.

24v WIRING

WARNING Before proceeding, allow battery compartment to vent for at least 15 minutes. This allows any combustible gases that have built up in the compartment to escape.

Wiring with Two 12v Batteries Connected in Series

STEP 1 Read ALL safety warnings and precautions on p. 23 before installing the Move.

STEP 2 Install a connector cable to the negative (-) post of Battery 1 (high side) and positive (+) post of Battery 2 (low side).

STEP 3 Connect the positive (+) lead from the Move to the positive (+) post of Battery 1 (high side).

WARNING The positive lead on a 24v setup MUST be wired through a **50 Amp Circuit Breaker**.

STEP 4 Connect the negative (-) lead from the Move to the negative (-) post of Battery 2 (low side).

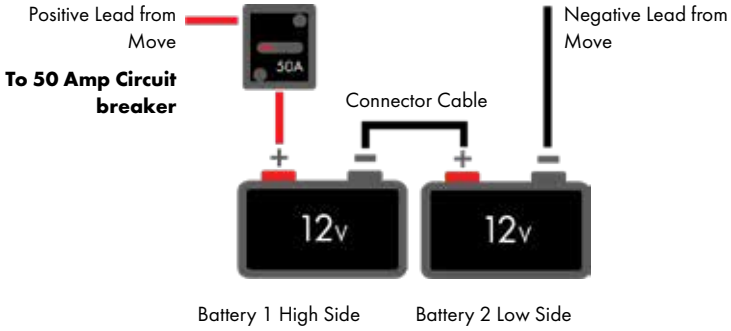

Wiring with a single 24v Lithium Battery

NOTE: The Move may also be wired to multiple 24v batteries wired in parallel.

STEP 1 Read ALL safety warnings and precautions on p. 23 before installing the Move.

STEP 2 Connect the positive (+) lead from the Move to the positive (+) post.

WARNING The positive lead on a 24v setup MUST be wired through a **50 Amp Circuit Breaker**.

STEP 3 Connect the negative (-) lead from the Move to the negative (-) post.

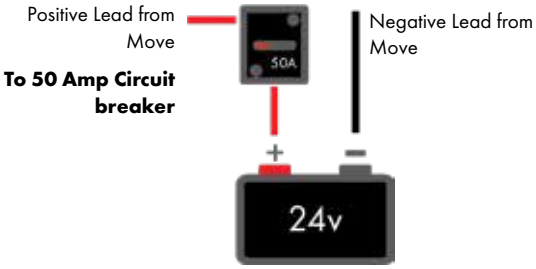

36v WIRING

WARNING

Before proceeding, allow battery compartment to vent for at least 15 minutes. This allows any combustible gases that have built up in the compartment to escape.

Wiring with Three 12v Batteries Connected in Series

STEP 1 Read ALL safety warnings and precautions on p. 23 before installing the Move.

STEP 2 Install a connector cable to the negative (-) post of Battery 1 (high side) and positive (+) post of Battery 2. Install another connector cable to the negative (-) post of Battery 2 and positive (+) post of Battery 3 (low side).

STEP 3 Connect the positive (+) lead from the Move to the positive (+) post of Battery 1 (high side).

WARNING

The positive lead on a 36v setup MUST be wired through a **60 Amp Circuit Breaker**.

STEP 4 Connect the negative (-) lead from the Move to the negative (-) post of Battery 3 (low side).

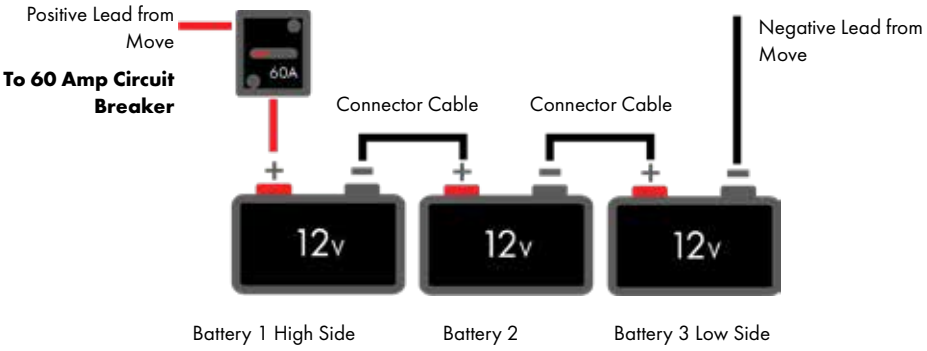

Wiring with a single 36v Lithium Battery

NOTE: The Move may also be wired to multiple 36v batteries wired in parallel.

STEP 1 Read ALL safety warnings and precautions on p. 23 before installing the Move.

STEP 2 Connect the positive (+) lead from the Move to the positive (+) post.

WARNING

The positive lead on a 36v setup MUST be wired through a **60 Amp Circuit Breaker**.

STEP 3 Connect the negative (-) lead from the Move to the negative (-) post.

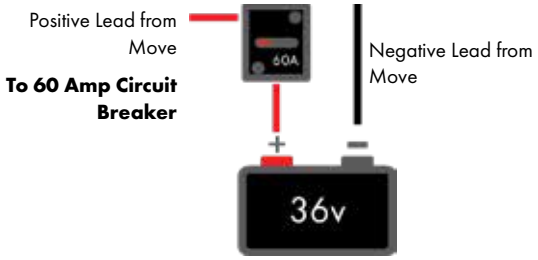

OPERATING the MOVE

Here's all the information you'll need on the functions, safe use, and maintenance of the MOVE. If you have questions, contact our Customer Service Team at **+1 (813) 689-9932 option 2** or visit our website at **www.power-pole.com**.

TROLLING MOTOR TERMINOLOGY

WARNING

When stowing or deploying the motor, keep fingers clear of all hinges, pivot points and moving parts. To prevent injury, always use the Pull Cord to stow or deploy the unit.

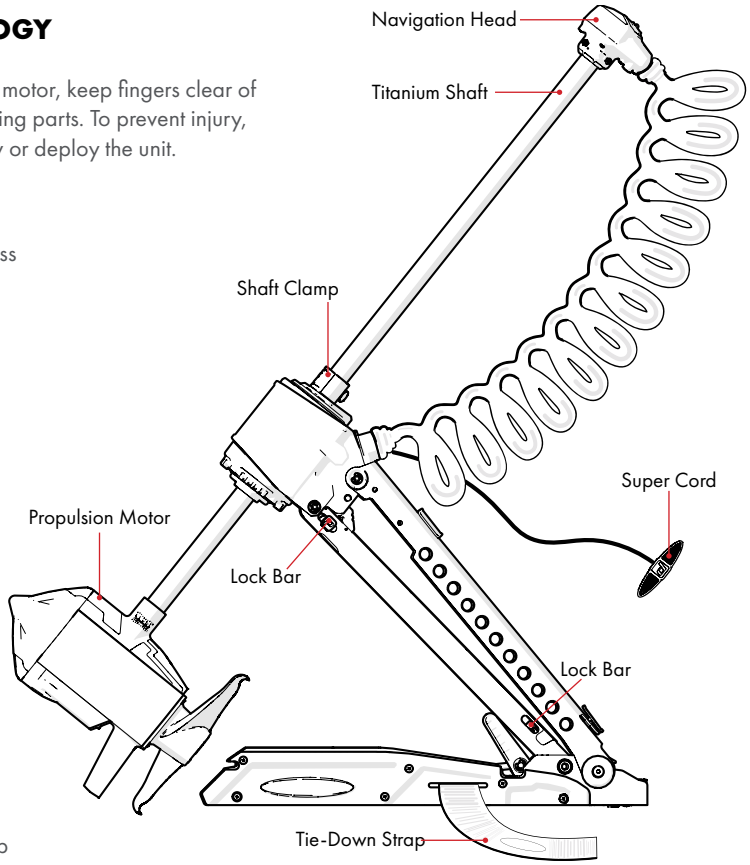

Navigation Head

The Navigation Head has an internal compass and 3 LEDs: (Anchor Mode, Navigation Heading, and Prop) which convey Move status information. (Navigation Head LED diagram p. 30)

Aerospace Grade Titanium Shaft

The Titanium Shaft was built to be as light and tough as possible and features a lifetime warranty.

Shaft Clamp

The Shaft Clamp is used to adjust the depth of the propulsion motor for operation or moving it into the ideal stowing position.

Tie-Down Strap

When the unit is in the stowed position, the Security Strap wraps around the shaft to keep the unit secure when transporting or running on the water.

Dyneema® Super Cord

The Super Cord is used to safely stow and deploy the trolling motor. When the trolling motor is in a deployed position, lifting up on the pull cord will disengage the lock bar and allow the unit to be safely stowed.

Lock Bars

The Lock Bars keep the unit held in its stowed and deployed positions. They are located on the lower arm and lock into place when the unit is in a deployed position. These also provide a secondary method to stow and deploy the unit if the Super Cord breaks.

Propulsion Motor

The Propulsion Motor is responsible for driving the Move. It features an ultra-quiet, efficient brushless motor.

STOWING, DEPLOYING, AND ADJUSTING

DEPLOYING THE MOVE ZR

WARNING

When stowing or deploying the Move, keep fingers clear of all hinges, pivot points and moving parts. To prevent injury, always use the **Super Cord** to stow or deploy the unit.

STEP 1 If needed, detach the **Tie-Down Strap**.

STEP 2 Use **Super Cord** to lift trolling motor up and over the bow. Once the trolling motor is in its properly deployed position, the **Lock Bars** will slide into place. **FIG 1**

WARNING

NEVER attempt to operate the trolling motor until it is in its properly deployed position.

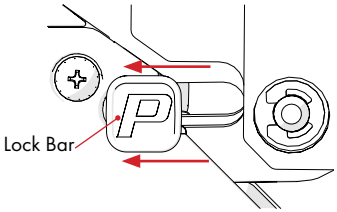

Figure 1
Lock Bar Position

STOWING THE MOVE ZR

Any time the trolling motor is not in use, whether when operating the main motor or when trailering, the trolling motor must be placed in its proper, stowed position. To avoid damage to the unit, vessel, and/or passengers, follow the listed stowing procedure and parameters.

IMPORTANT! The **Propulsion Motor** must be properly seated on the flat part of the Rubber Bumpers (shown as **green** in **FIG 2)**. If the unit is not seated properly, redeploy the unit and follow **Adjusting Move Depth** page 28.

STEP 1 Use the **Super Cord** to lift the propulsion motor out of the water and onto the trolling motor base.

STEP 2 If needed, attach the **Tie-Down Strap**. **FIG 3**

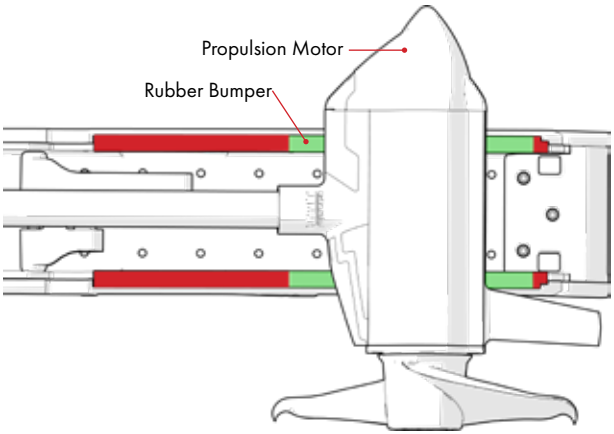

Figure 2
Proper Stowing Position

CAUTION

Failure to properly stow the trolling motor in accordance with parameters may result in damage to the shaft and/or other components on the unit.

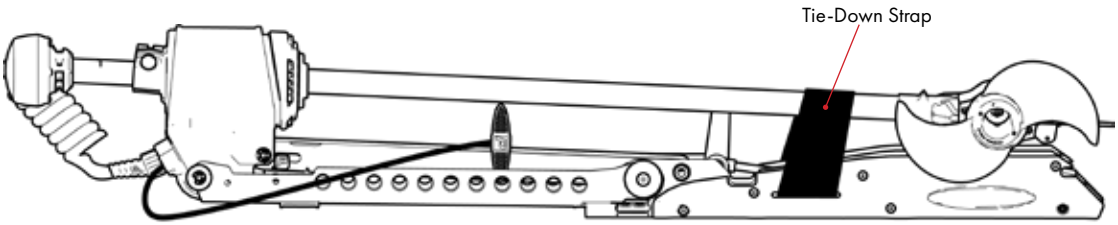

Figure 3
Properly Stowed Trolling Motor

ADJUSTING THE MOVE ZR DEPTH

WARNING

When stowing or deploying the Move, keep fingers clear of all hinges, pivot points and moving parts. To prevent injury, always use the Super Cord to stow or deploy the unit.

The Move's depth may be adjusted using the **Shaft Clamp** to ensure it stows properly or the Propulsion Motor is deep enough in the water for optimum performance.

STEP 1 While firmly grasping the **Shaft**, open the **Clamp Handle**.

WARNING

Once the Clamp Handle has been opened the Propulsion Motor can freely fall, creating a pinching hazard between the Navigation Head and Steering Motor Housing.

STEP 2 Slide the **Propulsion Motor** up or down until it is in the desired position.

NOTICE: For optimum operation, the Propulsion Motor must be at least 12" below the water's surface.

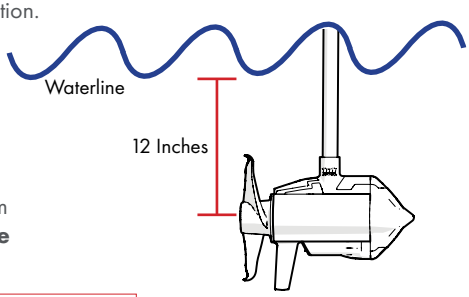

STEP 3 Clasp the **Clamp Handle** back into its original position.

STEP 4 If the **Shaft Clamp** does not hold the **Shaft** in place and keep it from sliding while the **Clamp Handle** is closed, open the **Clamp Handle** and tighten the **Thumb Screw**. Then, close the **Clamp Handle**.

IMPORTANT! The Shaft Clamp **MUST** be tight or the ZR will not function properly.

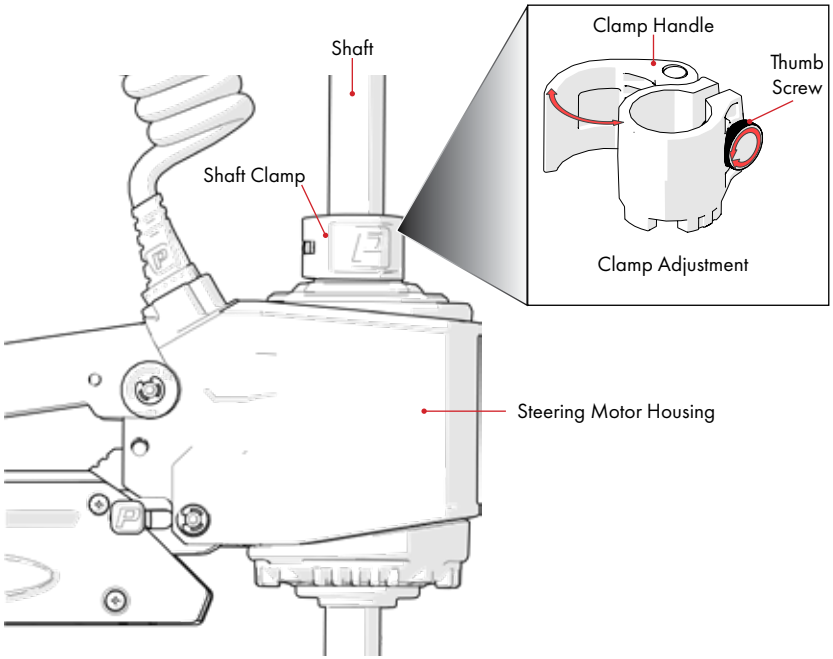

FEATURES OVERVIEW

MOVE ZR FEATURES TERMINOLOGY

ANCHOR MODE

Anchor Mode uses GPS to hold your boat in place, taking the current and wind into account. When Anchor Mode is on, the Anchor Mode LEDs on the Info Display and Navigation Head will be solid yellow. Anchor Mode can be turned on/off using the Hybrid Remote or Anchor Mode Foot Button.

- **Anchor Jog**
  When in Anchor Mode, the buttons on the Hybrid Remote with an Orange Dot (•) can be used to "Jog" the Move. Each time you tap one of these buttons, the Move will jog 5' in a corresponding direction.

NAVIGATION MODE

The Move has two navigation modes: **Compass Heading** and **Vector Heading**. Compass Heading is the default navigation mode. The default Navigation Mode can be changed in the app. Steering the Move when Navigation Mode is on will set a new heading. Navigation Mode can be set using the Move Remote. In Navigation Mode, the Navigation Mode LEDs on the Info Display and Navigation Head will be solid teal.

- **Compass Heading**
  In Compass Heading, the Navigation Head will always point in the exact direction it was set in. However, the wind and current will affect the course of your vessel.
- **Vector Heading**
  In Vector Heading, the Navigation Head will follow a set line from the exact direction it was set in. Unlike Compass Heading, in Vector Heading your vessel will follow a straight line regardless of what the wind and current are doing.

ACTIVE HEADING

When the Active Heading Foot Button is **double tapped**, both the propeller (at current set speed) and Navigation Mode turn on (a single tap will not turn on Active Heading).

NOTICE: This will either be Compass Heading or Vector Heading, depending on what is set in the app.

The Navigation Mode LEDs on the Info Display and Navigation Head will be solid teal. The Prop Icon LED on the Info Display will be solid green and the Navigation Head LED will be solid green. If you steer in Active Heading, the Move will stay in Active Heading mode, and the heading will be updated.

While in Active Heading mode: pressing the Momentary On button on the Foot Pedal, the Prop or Navigation Buttons on the Move Remote, or the Active Heading Foot Button will turn off **both** the propeller and Navigation Mode, disengaging Active Heading Mode.

REVERSE

The prop will spin in reverse. The prop speed will be displayed on the Info Display and can be adjusted via the Hybrid Remote. The Prop Icon LED on the Info Display will be solid orange and the Navigation Head LED will be solid orange. It is pre-programmed to a set speed of 10. With Reverse engaged, the reverse speed can be changed using the and buttons on the Hybrid Remote. Once the unit has been taken out of Reverse mode, the most recent speed setting will be saved until the Move is turned off, at which point the reverse speed will revert back to10.

NOTICE: Only use reverse in open water or areas with soft vegetation that will not damage the trailing edge of the propeller.

NAVIGATION HEAD LEDs

LED	NAME	FUNCTIONALITY
	Anchor Lock	- Anchor Mode On
	Prop	-Prop On, Forward
		-Prop On, Reverse
	Navigation Mode	-Navigation Heading On

ADDITIONAL NAVIGATION HEAD LED FUNCTIONS

All LEDs Flash TEAL: MOVE is in Pairing Mode
All LEDs Flash RED: Error (Check Simple Display for More Information)
All LEDs Jog ORANGE: Update Downloading
All LEDs Jog YELLOW: Powering Up

USING THE **WIRELESS HYBRID REMOTE**

HYBRID REMOTE FEATURES OVERVIEW

Remote Battery Level Indicator

The Hybrid Remote LED serves as a battery level indicator for the remote. When a button is pressed, the LED will flash either red, yellow or green, depending on the battery level (red being low, green being charged).

Charging the Hybrid Remote

The **Hybrid Remote** snaps into the **Charging Cradle**. It can be stored in the cradle or removed and used. To remove the remote, grab either side and firmly pull it from the cradle.

While charging, the LED on the remote will flash red if the battery is low, yellow at mid-charge, green when nearing full charge, and will shift to a solid green when fully charged.

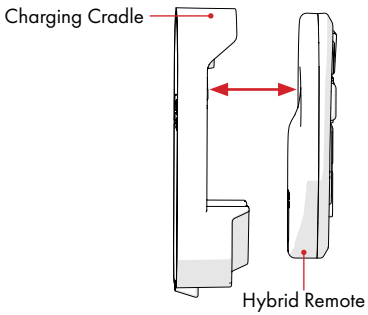

Charging Temperature Constraints

To avoid damage, the Hybrid Remote will not be charged in extreme hot or cold temperatures. If the remote LED displays solid red, it is over temperature (113°F). If it displays solid blue, it is too cold for charging (32°F).

Firmware Updates

If a firmware update is available, the next time the remote is plugged into the Charging Cradle it will be downloaded. While the update is downloading to the remote, the LED will slowly blink red. While the update is installing to the remote, the LED will flash red and green intermittently. When the update is installed, the LED will turn off.

HYBRID REMOTE FEATURES OVERVIEW CONTINUED

Pairing Procedure

NOTICE: Remote must be within 2ft. of Base PCB to initiate pairing.

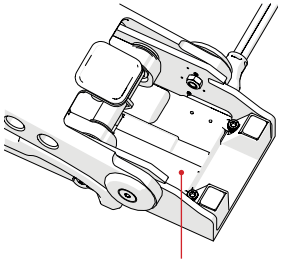

All remotes come pre-paired to your MOVE. However, if you need to pair a remote, tap L and R at the same time. **This will open the six second pairing window** (The MOVE will constantly ring and the 3 LEDs on the Head Unit will intermittently flash **TEAL**). Then, tap the ▼ and ▲ at the same time. The Move will beep twice, indicating the remote is now paired.

HYBRID REMOTE BUTTON FUNCTIONS

BUTTON	NAME	FUNCTIONALITY
	Anchor Mode	Tapping will put the Move into Anchor Mode. Tapping or will turn Anchor Mode off.
	Navigation Heading	Tapping will set a navigation heading. Tapping or will take the unit out of Navigation Heading Mode.
	Speed Up	Tapping will increase trolling motor speed. Speed will be displayed on the Info Display. For more information on the Info Display, see p. 34. This speed will apply to all unit functions and modes.
	Speed Down	Tapping will decrease trolling motor speed. It will be displayed on the Info Display. For more information on the Info Display, see p. 34. This speed will apply to all unit functions and modes.
L	Steer Left	Pressing and holding will rotate the prop motor counter clockwise, steering the Move to the left. As soon as you let off , prop motor will stop rotating.
R	Steer Right	Pressing and holding will rotate the prop motor clockwise, steering the Move to the right. As soon as you let off , prop motor will stop rotating.
	Reverse Prop	Tapping will put the Move into Reverse mode. Tapping the and buttons while in reverse will change reverse speed. Tapping , , or will take the unit out of Reverse Mode.
▼	Anchor Down	Pressing and holding ▼ will deploy the anchor. Double tapping will auto deploy.
▲	Anchor Up	Pressing and holding ▲ will retract the anchor. Double tapping will auto retract.
	Prop On/ Off	Tapping will turn the prop on. It will stay on until is pressed again. If the Move is in Reverse Prop mode, tapping will shut the prop off.

USING THE **REAL-FEEL™ FOOT PEDAL**

FOOT PEDAL TERMINOLOGY

The Foot Pedal is used for controlling the direction of the trolling motor, speed of the trolling motor, and for propeller operation. Use the information below to familiarize yourself with the layout, features and functions of the Foot Pedal.

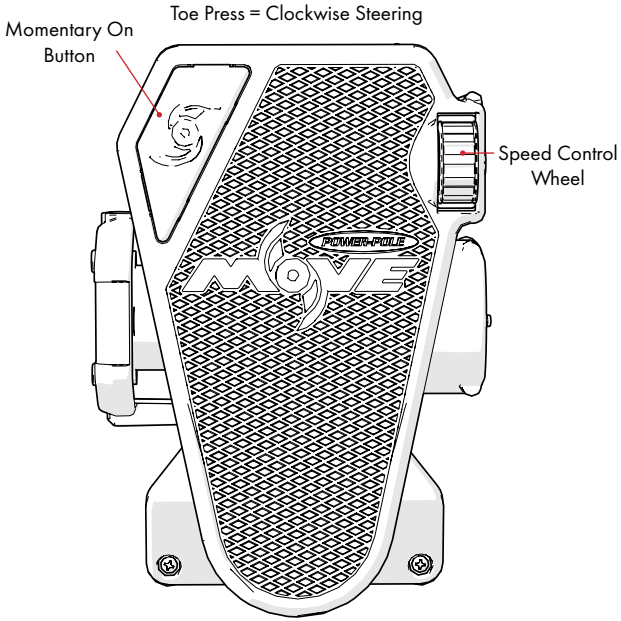

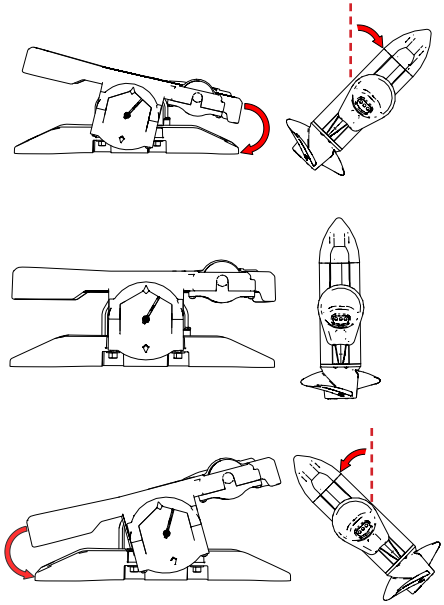

Momentary On Button

Pressing and holding the Momentary on Button will turn the propeller on. The propeller will continue to operate while the button is being held down. When the button is released, the propeller will stop operating.

Speed Control Wheel

The Speed Control Wheel controls the speed at which the propeller spins. Turning the Speed Control Wheel clockwise (forward) will increase speed. Turning the Speed Control Wheel counter-clockwise (backward) will decrease speed. The Foot Pedal will make a single beep each time the speed is increased or decreased. The speed will be shown on the Info Display.

Pairing Procedure

The Foot Pedal comes pre-paired to the Move. However, if you need to pair a Foot Pedal, wave a magnet over the Circuit Board Cover (see diagram). **This will open a 10 second pairing window.** During this time, the Foot Pedal will beep steadily. Finally, tap the ◁ and ▷ on the Hybrid Remote at the same time, opening the pairing window on the Move. The Foot Pedal will chime, indicating it is now paired.

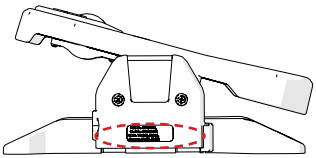

Wave Magnet Here

USING THE **WIRELESS FOOT BUTTONS**

FOOT BUTTON OVERVIEWS

The foot buttons can be used to toggle **Anchor Mode** and **Active Heading** on or off. Tap the **Anchor Mode Foot Button** once to activate Anchor Mode. Tap it again to turn it off. The **Active Heading Foot Button** must be tapped twice to turn on Active Heading.

Anchor Mode

Active Heading

Pairing Procedure

All foot buttons come pre-paired to the MOVE. However, if you need to pair a Foot Button,tap the and on the remote at the same time. **This will open a 6 second pairing window** (The MOVE will make a consistent tone and the 3 LEDs on the Head Unit will intermittently flash **TEAL**). Then, press the Foot Button you are pairing. The Foot Button will beep twice, indicating pairing is complete.

FOOT BUTTON BATTERY REPLACEMENT

IMPORTANT! Ensure the Foot Button and the surrounding area is as dry as possible to avoid any moisture intrusion.

STEP 1 Insert a small, Flat Head Screwdriver into the notch to pry it apart.

STEP 2 Remove the battery from the holder on the **Circuit Board** and replace with any **CR2032 3V Lithium Coin Battery**.

STEP 3 Lay the **Circuit Board** flush in the **Bottom Housing**, ensuring it lays flat.

STEP 4 Lay the **Foam Pad** on the **Circuit Board**.

STEP 5 Insert the **Plastic Disc** into the **Membrane**. **FIG 1**

STEP 6 Install the **Membrane** to the **Bottom Housing** so the **Tab** goes into the **Notch** on the **Bottom Housing**. Make sure the **Plastic Disc** does not fall out. **FIG 2**

STEP 7 Reinstall the **Top Housing** so it snaps into place and there is no gap between it and the **Bottom Housing**. **FIG 3**

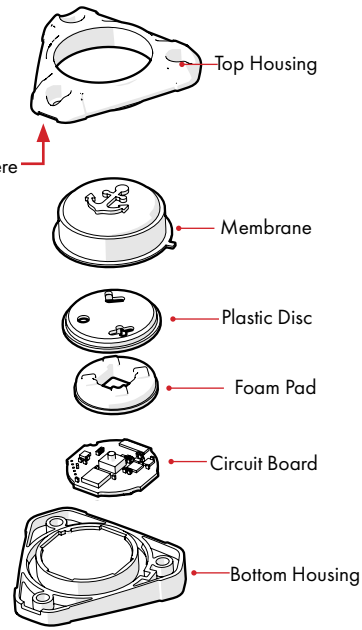

Exploded View

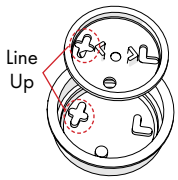

Figure 1

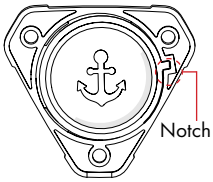

Figure 2

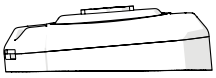

Figure 3

READING THE **WIRELESS INFO DISPLAY**

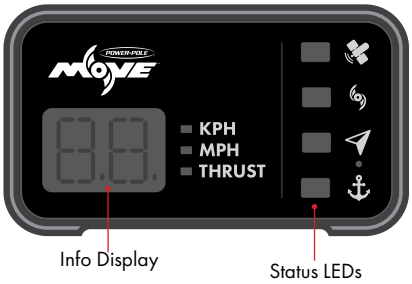

LED	NAME	FUNCTIONALITY
	GPS Signal	Solid Blue Good GPS Signal Flashing Blue Poor GPS Signal Flashing Yellow No GPS Signal
	Prop	Solid Green Prop On Solid Orange Reverse On
	Navigation Mode	Solid Teal Navigation Mode On
	Anchor Mode	Solid Anchor Mode On

INFO DISPLAY

The Info display is used to show a variety of information such as thrust/speed and error codes. The display will show thrust in an interval of 1-20 by default.

Motor propulsion speed can be controlled by thrust or KPH or MPH (Configurable in the app).

NOTICE: Depending on battery configuration and voltage, your speed setting may not go up to 20.

PAIRING PROCEDURE

The Info Display comes pre-paired to the Move. However, if you need to pair a display, wave a magnet up and down above the LEDs. **This will open a 10 second pairing window.** During this time, the display LED`s will flash as shown. Finally, tap the and on the remote at the same time, opening the pairing window on the Move. The display will beep twice, indicating it has been paired.

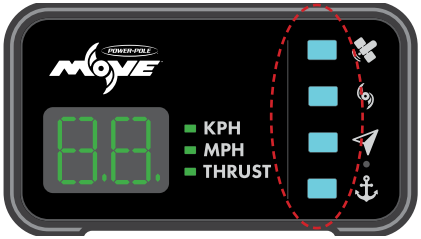

Pairing Window LEDs

POWER-POLE APP

POWER-POLE APP

While the Move is ready to be used out of the box, using the Move with the Power-Pole App creates an even better experience.

CONTROL

Control all your devices from the Power-Pole App using the Remote Feature. The app features a virtual remote with the same features available on the physical remote.

CONFIGURE

The Power-Pole App gives you unprecedented control over all of the Move's functions and accessories. Everything from the Propeller Acceleration rate to the Steering Aggressiveness can be adjusted and tuned to your exact needs.

Using the Power-Pole App with your Move makes for a truly tailored fishing experience.

MONITOR

Monitor the status of all your Power-Pole products all in one place. Easily find product status information including: connectivity, firmware version, Model, and Serial number.

DIAGNOSE

The Power-Pole app has a diagnosis feature built in to help our customer service team provide quick and effective solutions, allowing you to get back on the water as soon as possible.

UPDATE

We are constantly improving our products. Keeping your firmware up-to-date is a great way to ensure you're getting the most out of your Move. Using the Power-Pole App will ensure you never miss an update for your Move or any of its remotes.

MAINTENANCE AND STORAGE

Following these maintenance and storage tips will ensure you get the most use and longevity out of your Move trolling motor.

Mechanical Checks and Maintenance

- Never store the Move below 0°F.
- During extended periods of storage, storing the Move out of the elements will help to preserve finishes.
- To ensure long life and smooth operation, check the following locations to ensure they are properly greased. If no grease is present, apply all-purpose grease to the locations below.

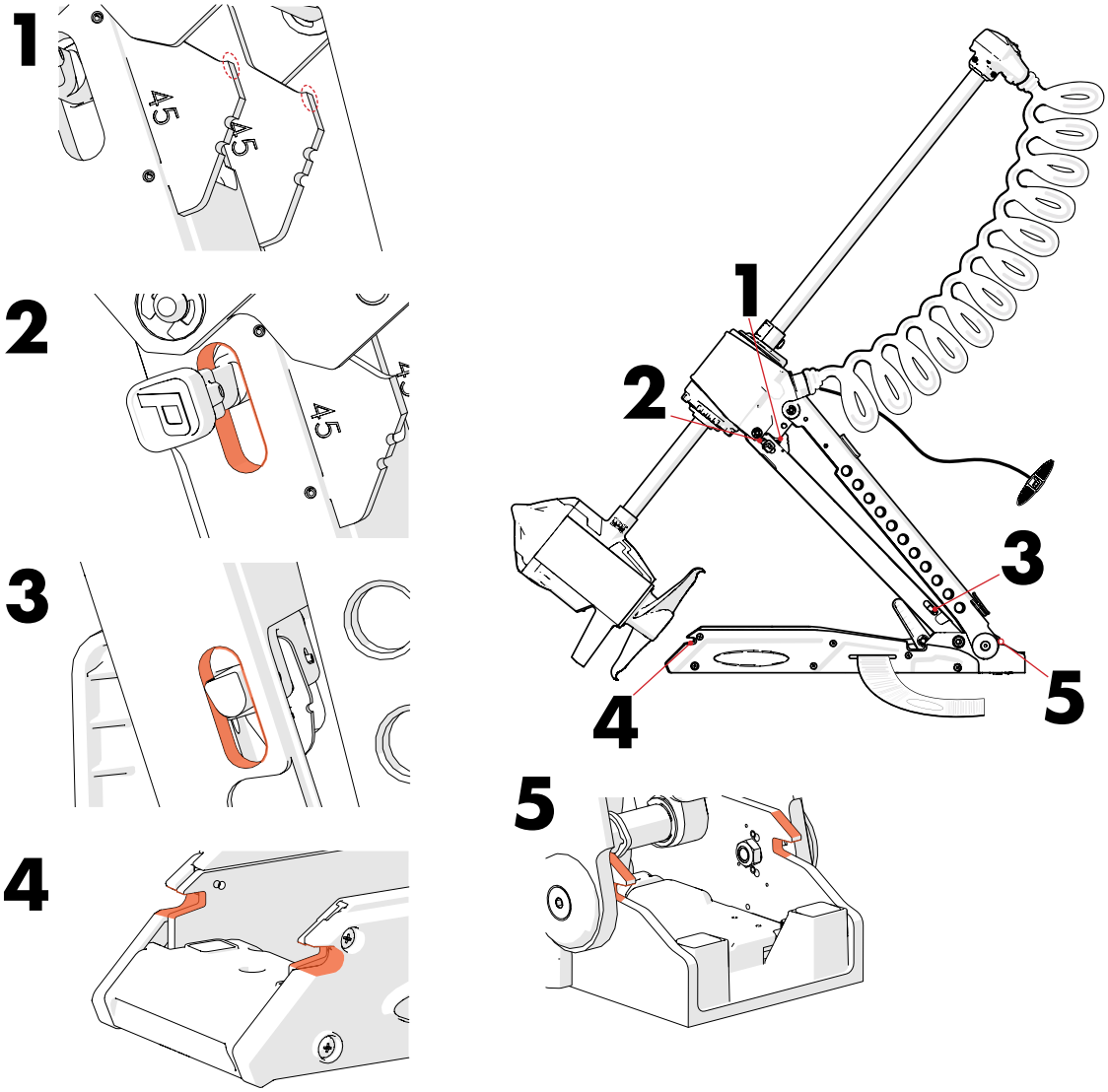

Yearly Checks and Maintenance

Once per year, inspect the Base PCB and apply dielectric grease if needed. Follow the steps below.

STEP 1 Disconnect the unit from power.
STEP 2 Deploy the trolling motor.
STEP 3 Using a **3/16" Allen Key**, remove the (2) **Screws** that hold the **Bumpers** and **Water Shield** in place.
STEP 4 Remove the (2) **Bumpers**, then lift the pull the **Water Shield** free.
STEP 5 Liberally apply **Dielectric Grease** to all terminals on the **Base PCB**. **FIG 2**
STEP 6 Install the **Water Shield** into place.
STEP 7 Slide the **Bumpers** into place so that the mounting holes on the **Water Shield** line up with the mounting holes on the **Bumpers**. **FIG 1**
STEP 8 Using a **3/16" Allen key**, install the (2) **Screws** and tighten to **20 in lbs**. **FIG 1**

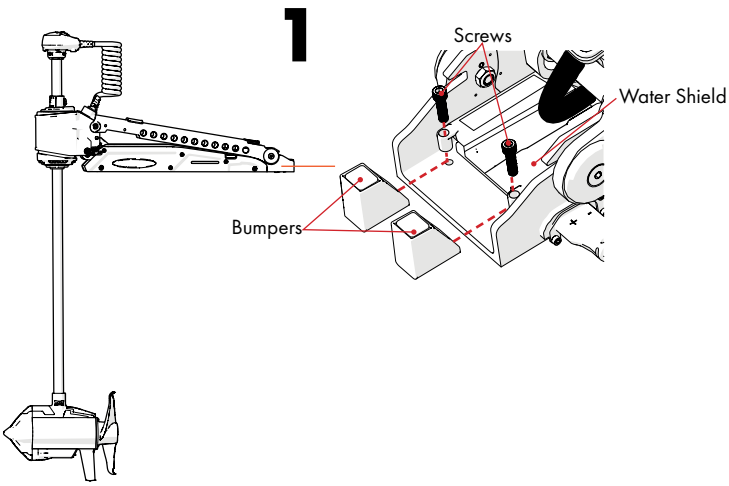

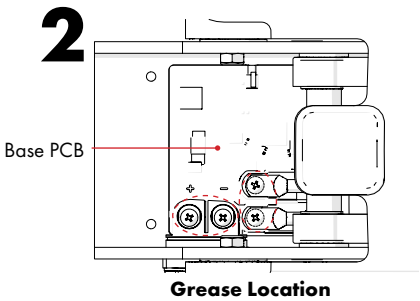

Battery Maintenance and Checks

- Always wear appropriate safety gear such as gloves and glasses.
- Follow battery manufacturer's maintenance instructions.
- Inspect all battery connections. If loose, tighten battery connections.
- Check battery terminals for dirt, oil and battery corrosion. If dirty, clean terminals using a water and baking soda solution. Dry with a clean cloth. Be sure to follow directions specific to your battery manufacturer when cleaning.
- Check wires to see if any cuts or abrasions exist. Contact JL Marine Systems Inc. at 1+(813) 689-9932 option 2 if any wire damage is found. Damaged cords can cause electric shock or electrocution.
- Inspect all batteries for any visible damage. This can include punctures, swelling, or warping of the batteries.

FAQ'S

For Customer Service, please call +1(813) 689-9932 option 2.

Q: What circuit breaker size is needed for the Move?
A: If wiring to a 36v setup, a **60 amp circuit breaker** must be used. If wiring to a 24v setup a **50 amp circuit breaker** must be used. For more information on wiring, visit (p. 23-25).

Q: Can I wire my Move with multiple lithium batteries wired in parallel?
A: Yes. The Move can be wired to a bank of 24v or 36v lithium batteries wired in parallel. Follow diagrams below.

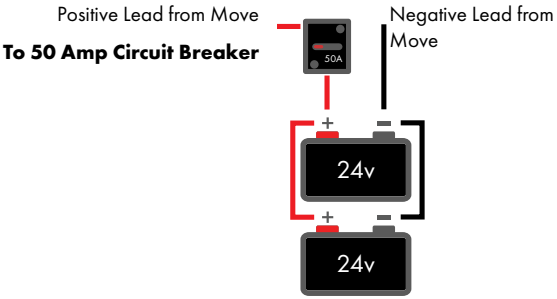

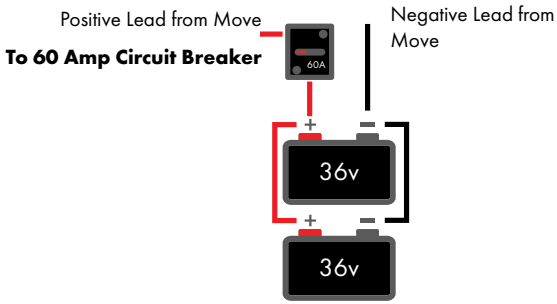

Q: How do I set up my Move for use with a 24v or 36v system?
A: The Move was uniquely designed to work with a 36v or 24v battery setup without any additional setup or programming. Just wire the trolling motor according to the instructions and your Move will be ready for use.

Q: Are there any performance differences between a Move wired to a 36v system and a Move wired to a 24v system?
A: A 24v system will max out around speed 17, while a 36v will max out at around speed 20 (these speeds are not guaranteed and may vary based on your battery condition). Amperage draw will also vary between 24v and 36v systems.

Q: Why does my display show a max speed, but then immediately drop without pressing a button?
A: This may happen with weak batteries. There may be enough voltage to display a higher speed, but once the motor begins drawing any power, the voltage may drop, changing the maximum achievable speed.

Q: Why does my Maximum speed drop as I use the trolling motor?
A: This depends on battery chemistry. With lithium batteries, your trolling motor will probably operate close to its top speed for the entire use cycle, then suddenly drop when the batteries die. With other battery types such as AGM or Lead Acid, your top speed will gradually decrease as your batteries are depleted.

Q: Does the Move come with a warranty?
A: The Move comes with a lifetime warranty on the shaft and a three-year warranty on all other components. For more warranty information, visit p. 5 of this manual.

Q: How much does the Move weigh?
A: Product weight varies from model to model. Visit **Appendix D** (p. 43) for more information on product weights.

Q: What is the amperage draw of the Move?
A: The Amperage draw varies depending on thrust level and whether the Move is operating in a 24v or 36v configuration. More information on Amp draw can be found in **Appendix D** (p. 43). The Move is most efficient when operated at the thrust levels highlighted **Green**.

FAQ'S

Q: Why is Anchor Mode/Navigation Mode behaving erratically?

A: The GPS signal may be obstructed. Ensure there are no large pieces of metal near the head and no magnets within the vicinity. If there are magnets within a few feet of the Navigation Head, it will interfere with the GPS signal. If there is nothing obstructing the signal, you may need to recalibrate your Navigation Head Circuit Board. This can be done in the Power-Pole App.

Q: Why is Anchor Mode too aggressive/not aggressive enough?

A: Anchor Mode is configurable in the Power-Pole App. Also, for best operation, make sure the Propulsion Motor is at least 12" below the water's surface.

Q: I don't have Power-Pole Shallow Water Anchors, why are there buttons on the remote?

A: Most avid anglers find that having a combination of a GPS trolling motor and shallow water anchors allow for optimum boat control while chasing fish in a variety of conditions. The team of anglers at Power-Pole wanted one remote to control all of the Power-Pole accessories on their boat, so the anchor buttons were integrated into the remote.

Q: Why is my display showing a random number?

A: The Move is most likely either updating or the display is relaying an error code.

Q: Will the Move drain my batteries when not in use?

A: As with any device, it is recommended to either turn off the main power cutoff switch or disconnect from power when not in use. The Move's accessories do have a slight power draw. For more information see **Appendix D** (p. 43).

COMPLIANCE STATEMENTS

General Statement (for all devices)
Warning: Changes or modifications to this device not expressly approved by JL Marine Systems, Inc. could void the user's authority to operate the equipment.

FCC Specific Statement
NOTE: This equipment has been tested and found to comply with the limits for a Class B digital device, pursuant to Part 15 of the FCC Rules. These limits are designed to provide reasonable protection against harmful interference in a residential installation. This equipment generates, uses, and can radiate radio frequency energy and, if not installed and used in accordance with the instructions, may cause harmful interference to radio communications. However, there is no guarantee that interference will not occur in a particular installation. If this equipment does cause harmful interference to radio or television reception, which can be determined by turning the equipment off and on, the user is encouraged to try to correct the interference by one or more of the following measures:

- Reorient or relocate the receiving antenna.
- Increase the separation between the equipment and receiver
- Connect the equipment into an outlet on a circuit different from that to which the receiver is connected
- Consult the dealer or an experienced radio/TV technician for help

FCC Part 15.19 Warning Statement – (Required for all Part 15 devices) THIS DEVICE COMPLIES WITH PART 15 OF THE FCC RULES. OPERATION IS SUBJECT TO THE FOLLOWING TWO CONDITIONS: (1) THIS DEVICE MAY NOT CAUSE HARMFUL INTERFERENCE, AND (2) THIS DEVICE MUST NOT ACCEPT ANY INTERFERENCE RECEIVED, INCLUDING INTERFERENCE THAT MAY CAUSE UNDESIRED OPERATION.

FCC Part 15.21 Warning Statement – NOTE: THE GRANTEE IS NOT RESPONSIBLE FOR ANY CHANGES OR MODIFICATIONS NOT EXPRESSLY APPROVED BY THE PARTY RESPONSIBLE FOR COMPLIANCE. SUCH MODIFICATIONS COULD VOID THE USER'S AUTHORITY TO OPERATE THE EQUIPMENT.

FCC/ISED RF Exposure
ENGLISH: This equipment complies with radiation exposure limits set forth for an uncontrolled environment. This equipment is in direct contact with the body of the user under normal operating conditions. The transmitter must not be co-located or operating in conjunction with any other antenna or transmitter.

FRENCH: Cet équipment est conforme aux limites d'exposition aux radiations dans un environment non controle. Cet équipment est en contact direct avec le corps de l'utilisateur dans des conditions de fonctionnement normales. Cet émetteur ne doit pas être co-localisées ou opérant en conjunction avec tout autre antenne ou transmetteur.

ENGLISH: This device complies with Industry Canada license-exempt RSS standard(s). Operation is subject to the following two conditions: (1) this device may not cause interference, and (2) this device must not accept any interference, including interference that may cause undesired operation of the device.

FRENCH: Le présent est conforme aux CNR d'Industrie Canada applicables aux appareils radio exempts de license. L'exploitation est autorisée aux deux conditions suivantes: (1) l'appareil ne doit pas produire de brouillage, et (2) l'utilisateur de l'appareil doit accepter tout brouillage radioélectrique subi, même si le brouillage est susceptible d'en compromettre le fonctionnement.

MODEL NUMBER	FCC ID:	IC:
MV-ZR-45-BK	A7FEA087 Contains: SQGBL653	11454A-EA087 Contains: 3147A-BL653
MV-ZR-52-BK	A7FEA087 Contains: SQGBL653	11454A-EA087 Contains: 3147A-BL653
MV-ZR-60-BK	A7FEA087 Contains: SQGBL653	11454A-EA087 Contains: 3147A-BL653
MV-ZR-45-WT	A7FEA087 Contains: SQGBL653	11454A-EA087 Contains: 3147A-BL653
MV-ZR-52-WT	A7FEA087 Contains: SQGBL653	11454A-EA087 Contains: 3147A-BL653
MV-ZR-60-WT	A7FEA087 Contains: SQGBL653	11454A-EA087 Contains: 3147A-BL653
MV-AC-FOOT-PDL	Contains: SQGBL653	Contains: 3147A-BL653
MV-AC-FS-ANCHOR	A7FEA204	11454A-EA204
MV-AC-FS-HEAD	A7FEA205	11454A-EA205
MV-AC-FS-REV	A7FEA207	11454A-EA207
MV-AC-INFO-DSPY	A7FEA142	11454A-EA142
MV-AC-RC-REMOTE	A7FEA131	11454A-EA131

APPENDICES

APPENDIX A Gel-Coat Drilling Procedure

WARNING

Always follow this procedure when drilling into the gel-coat of a boat. Failure to follow this procedure may result in chipping or cracking of your boat's gel-coat.

STEP 1 Cover the area that will be drilled with blue painter's tape.

STEP 2 Mark holes on masking tape with a fine-tip marker.

STEP 3 Drill a pilot hole with a drill bit that is 1/8" or less. Then, drill the hole again using a drill bit that is 1/16" larger. Repeat this process, increasing drill bit size by 1/16" until holes are the desired diameter.

APPENDIX B Wire Connection/Termination Procedure

TOOLS:

- Nitrile Gloves
- Wire Stripper
- Crimping Tool
- Heat Gun

WARNING

Always make sure power is shut off to the wires you are working with. NEVER attempt to attach a ring terminal or butt connector to a live wire.

STEP 1 Strip back the insulation on the wire(s) you will be connecting so around 1/4" of wire is exposed.

STEP 2 Twist all of the exposed wire ends and insert them into the Butt Connector or Ring Terminal.

IMPORTANT! Ensure no uninsulated wire is exposed past the end of the Heat Shrink.

STEP 3 Crimp the Butt Connector onto the wire using the Crimping Tool.

IMPORTANT! Check Ring Terminal or Butt Connector for any cuts from crimping and give the cables a slight tug to ensure they are properly crimped. Poorly crimped or damaged connectors will not provide a water-tight seal. This will lead to corrosion and wire failure.

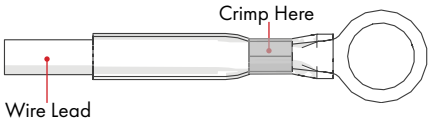

STEP 4 Use a Heat Gun to "shrink" the Heat Shrink of the Connector to the wire. Ensure no bubbles are present and the Connector has shrunk tightly to the insulation on the wire.

REMOVE SHROUDS

Using a **#2 Phillips Head Screwdriver**, remove the (6) **Screws** and **Lock Washers** on each **Side Shroud** that attach the **Side Shrouds** and **Rubber Bumpers** to the ZR.

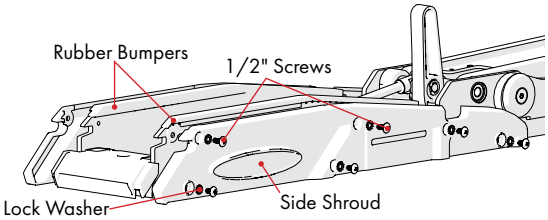

ROUTE TIE-DOWN STRAP

Route the **Strap** (Power-Pole Logo Side Face Up) through the **Side Shrouds** and **Base** as shown.

Place the **Side Shrouds** back in place while pulling the **Tie Down Strap** all the way through so the **Buckle** is resting against the **Side Shroud**.

Using a **#2 Phillips Head Screwdriver**, reinstall the (6) **Screws** and **Lock washers** on each **Side Shroud** and tighten snug.

IMPORTANT! The 2 uppermost screws on each shroud are the longer (1/2") screws.

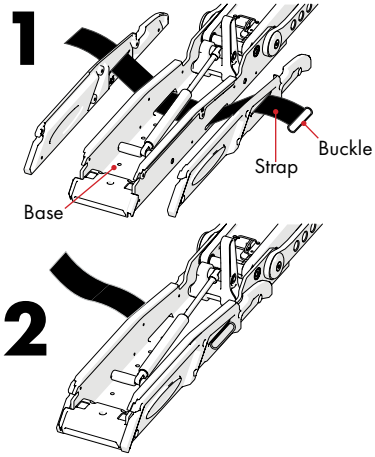

USING THE TIE-DOWN STRAP

Route the **Strap** over the **Shaft** and through the **Buckle**.

Pull the **Strap** snug against the **Shaft** and wrap it back over itself, using the Velcro to secure it.

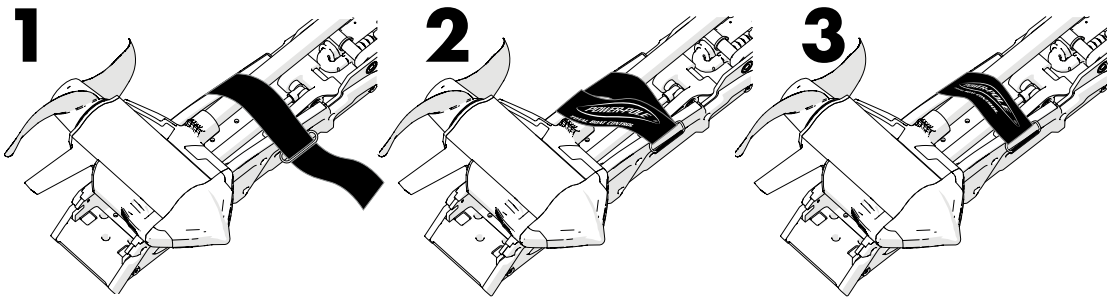

APPENDIX D Additional Product Information

AMPERAGE DRAW AND THRUST PER LEVEL

THRUST LEVEL	THRUST (LBS.)	AMP DRAW 24v	AMP DRAW 36v
1	1	0.45	0.3
2	1.5	0.6	0.4
3	2	0.75	0.5
4	3.5	1.125	0.75
5	5	1.5	1
6	8	2.25	1.5
7	11	3	2
8	15.5	4.5	3
9	19	6	4
10	25	9	6
11	28	10.5	7
12	35	15	10
13	44	21	14
14	51	27	18
15	61	37.5	25
16	68	45	30
17	78	48	36
18	88		44
19	95		50
20	100		55

PRODUCT WEIGHT

MODEL	WEIGHT
45 ZR	53 lbs.
52 ZR	54 lbs.
60 ZR	55 lbs.

NOTICE: Thrust levels highlighted in **Green** are the most efficient.

POWER DRAW OF ACCESSORIES

REMOTE	MODE	12V	24V	36V
Charging Cradle	Standby	10mA	5mA	3mA
-	Charging	120mA	60mA	43mA
Simple Display	Awake	39mA	18mA	12mA
-	Sleep*	7mA	3mA	1mA
Foot Pedal	Standby	27mA	16mA	12mA

*After 20 seconds w/o receiving communication from Base Circuit Board The Simple Display will go into a "sleep" mode.

DISPLAY ERROR CODES

ERROR CODE	DESCRIPTION
A2	Navigation Head Circuit Board not checked-in
A3	Steering Circuit Board not checked-in
A4	Propulsion Circuit Board not checked-in
A5	Steering Motor not checked-in
C1	No Steering Calibration
C2	No Navigation Head Circuit Board Compass Calibration
C3	No Base Circuit Board Compass Calibration
C4	Poor Navigation Head Circuit Board Compass Calibration
C5	Poor Base Circuit Board Compass Calibration
C6	Shaft slip detected
C7	Poor Steering Calibration
E0	Battery below 16v on power up; operation not possible
E1	Battery less than 10v; unit will turn off
E2	Base PCB solid state relay failed to turn on
E3	Low voltage on power up (possible short)
E4	Battery less than 16v during operation
E5	Electrolysis Detected
F1	Steering no current
F2	Steering over-current
F3	Steering stall
F4	Steering over temp
G2	Navigation Head Circuit Board Ping Test failure; poor communication
G3	Steering Circuit Board Ping Test failure; poor communication
G4	Propulsion Circuit Board Ping Test failure; poor communication
H1	Propulsion Motor Circuit Board over temp
H2	Propulsion Motor max RPM below expectation
L2	Poor Navigation Head Circuit Board Communication
L3	Poor Steering Circuit Board Communication
L4	Poor Propulsion Circuit Board Communication

APPENDIX E Error Codes and Update LED Colors

NAVIGATION HEAD AND DISPLAY UPDATE LED COLORS

LED COLOR	DESCRIPTION
RED	Display Updating
GREEN	Base Circuit Board Updating
WHITE	Navigation Head Circuit Board Updating
MAGENTA	Steering Circuit Board Updating
TEAL	Propulsion Circuit Board Updating
YELLOW	Other Update

GETTING THE MOST OUT OF YOUR NEW MOVE™ ZR TROLLING MOTOR

The Move comes ready-to-use out of the box. However, here are a few suggestions to ensure you get the most out of your new trolling motor.

ENSURE SHAFT CLAMP IS PROPERLY TIGHTENED

If the **Shaft Clamp** is not properly tightened, the Move will not perform as intended. Check to make sure the **Shaft** does not freely rotate, but that the **Shaft Clamp** and **Bottom Rotational Housing** also rotate with the **Shaft**. If the **Shaft Clamp** is loose, turn the **Thumb Screw** clockwise to the desired tightness.

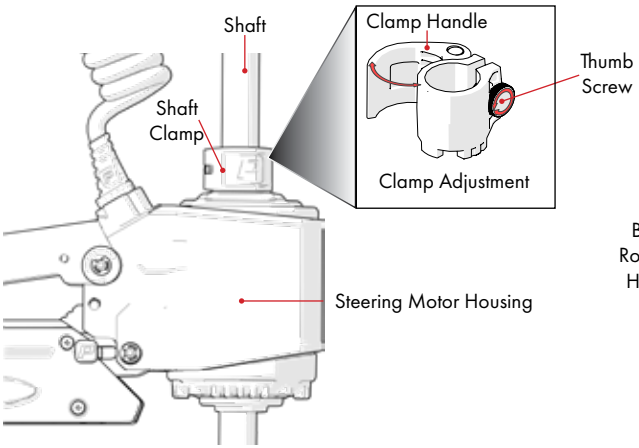

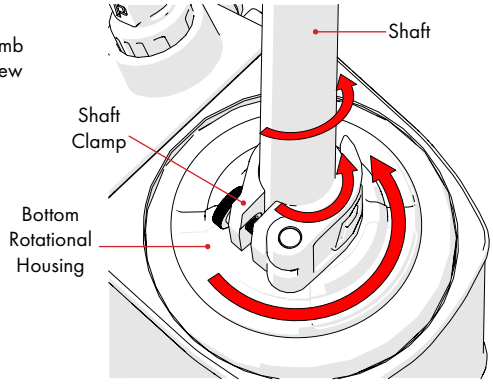

Properly Tightened Shaft Clamp

WHAT TO EXPECT FROM THE INITIAL STARTUP

The Info Display will flash in various patterns/colors while the LEDs on the Navigation Head "jog" back and forth. This is normal. The Move is ensuring all Circuit Boards are "checked in", error-free and ready for use. Once everything is checked in, the Navigation Head will ring and the Info Display will show GPS signal strength and speed setting.

APPENDIX F Initial Startup Procedure and Recommendations

CONNECT TO THE POWER-POLE APP

While the Move can be used without the use of our Power-Pole App, connecting to the app unlocks a variety of useful features and allows for a perfectly-tailored experience. Download the Power-Pole App from your device's App Store and follow the steps within the app to connect the Move.

SET THE BOW ANGLE OFFSET

Setting the bow angle offset will ensure your Move always points straight in line with your boat upon deployment. The bow angle offset can be set in the "Settings" tab of the app. Follow the in-app instructions to set your bow angle offset.

CALIBRATE THE BASE CIRCUIT BOARD

All Move Trolling Motors are factory calibrated and ready for use. However, when mounted near your electronics, they may need to be re-calibrated. For best results, recalibrate your Move's Base Circuit Board after installation. Base Board Calibration can be done in the "Settings" tab of the app. Follow the in-app instructions to calibrate your Base Circuit Board.

POWER-POLE®

Need help? Contact our Customer Service Team at

+1 813.689.9932 option 2

9010 Palm River Road, Tampa, Florida 33619
Phone 1+(813) 689-9932 Fax 1+(813) 689-8883
www.power-pole.com

JLMarine SYSTEMS, INC. ©2023 all rights reserved. Power-Pole Shallow Water Anchor.

28339622_V2.0