SolidRF TRUE5-A for 2G/3G/4G and 4G LTE

Manual

If you have any questions or concerns when installing or operating your cell phone booster, please email us:

Support@SolidRF.ca

Please provide the invoice of your product in your email. Or visit www.SolidRF.ca for more information.

Systems tested and certified against FCC standard, Equipment Class: Part 20 Wideband Consumer Booster (CMRS)

Systems tested and certified against IC standard, Type of Equipment: Amplifier, RSS-131

Product Diagram
Package Contents
Features

Test Installation

Installation – Step By Step

Technical Specification

Self Oscillation

Quick Troubleshooting
Find Strongest Signal

Manufactured and Warranted by
SolidRF Technology Inc. Canada
www.SolidRF.ca

Product Diagram

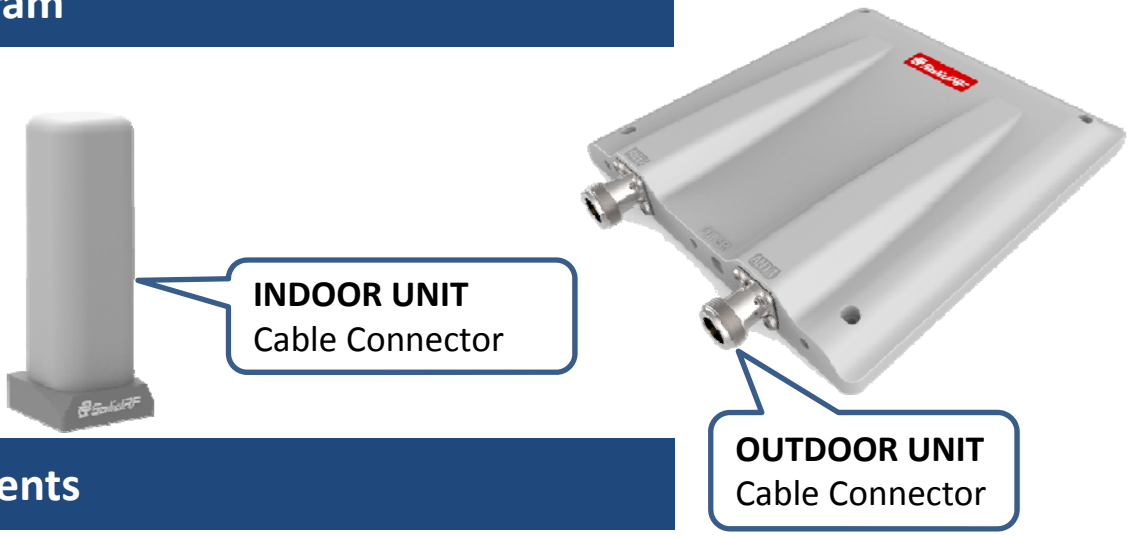

Package Contents

- Outdoor Unit
- Indoor Unit
- LM240 Cables: 1 x 45 feet
- Power Adapter

Features

- Greatly reduces dropped calls, extends signal range, and increases data rates
- Allows multiple mobile devices to be used simultaneously
- Oscillation (or interference) detection and automatic shutdown
- Overload protection circuit – protects cell towers from being overloaded
- Amplifies signal both to and from the cell tower
- Maximum 1 watts(EIRP) output power
- Works on all generations of 2G,3G and 4G
- Power control logic ensures maximum gain is within cellular standards
- Reduces radiation and extends battery life – up to 2 hours additional talk time in weak signal areas.

Supported Carriers

- AT&T 2G/3G (HSPA+)/4G LTE
- Verizon 3G/4G LTE
- T-Mobile 2G/3G/4G
- Sprint 3G/4G
- US Cellular 3G
- Metro PCS 3G/4G
- Major Canadian Carriers 2G/3G
- All other carriers using 700MHz(band12/13/17)/850MHz /1900 MHz/2100MHz

Test Installation

We **STRONGLY** recommends doing a soft install before the formal installation. Doing a test installation of a cell phone booster allows to get best optimal system setup.

Step1: Find the strongest signal, setup outdoor antenna with cable screwed

Affected by terrain and signal propagation characteristics. More higher of the outdoor antenna will get better signal. Find the best signal around the house by checking the bars of the cell phone. Setup the outdoor antenna on the top of building and connect the cable.

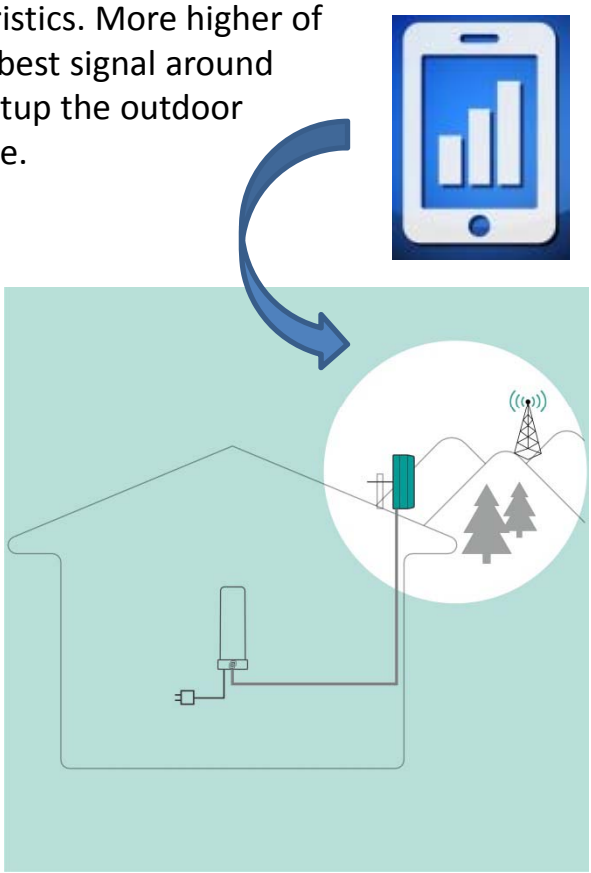

Find a cell tower nearby!
There are a bunch of resource online, here are some third party websites and app recommended.
SolidRF does NOT guarantee the accuracy or completeness on Third Party content
For Canada
website: www.cellmapper.net
app: TowerLocator(iPhone or Android)
For U.S.
websites:
www.cellmapper.net
www.cellreception.com/towers
www.antennasearch.com

Step2: Find a suitable place inside home for booster nearby the power socket

Minimum Required Separation Distance Between Indoor And Outdoor Antenna：
6 meters (20 ft) horizontal distance
4 meters (13 ft) vertical distance(As far as possible)

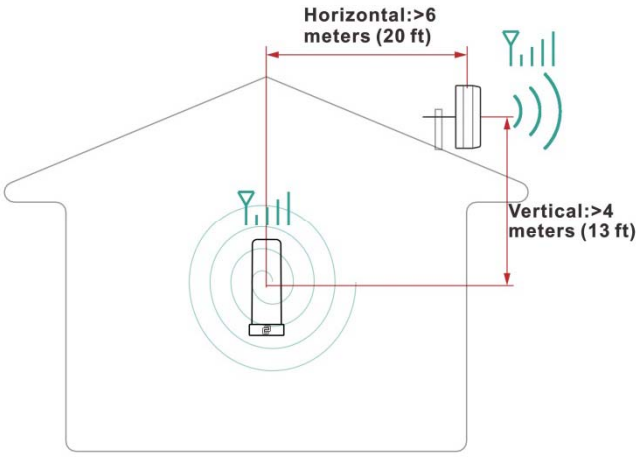

Step3: Introduce cables into room

Attention: Don't excessive bending of the cable, otherwise it will be damaged and loss functions.

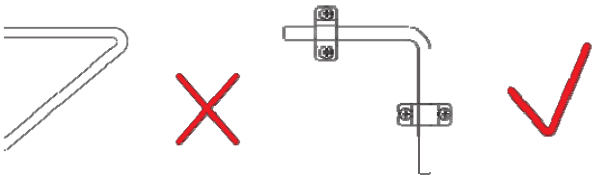

Step4: Setup booster

1. Connect cable to outside connecter, make sure pin of the cable head smooth import connecter's socket, and then screw well till the end;
2. Plug in power cord;

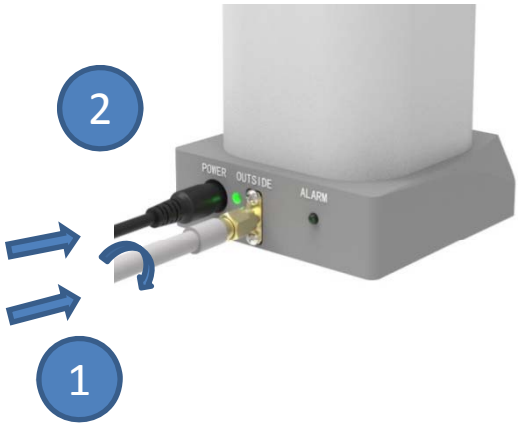

Step5: Power on and evaluate effects

1. Power on booster;
2. Observe the flashing status of "ALARM" lights;
3. If the lights lit 1 second and then goes out, that means all the test installation is correct;
4. Now check your cell phone to see how about the signal strength improved;
5. If light is blinking, please read the trouble shooting part of this manual;

The Formal Installation

OUTDOOR Unit INSTALLATION

a. Choose right position: 30 cm away from any other metallic objects, and 100 cm away from any windows

b. Mount the antenna as the picture shows

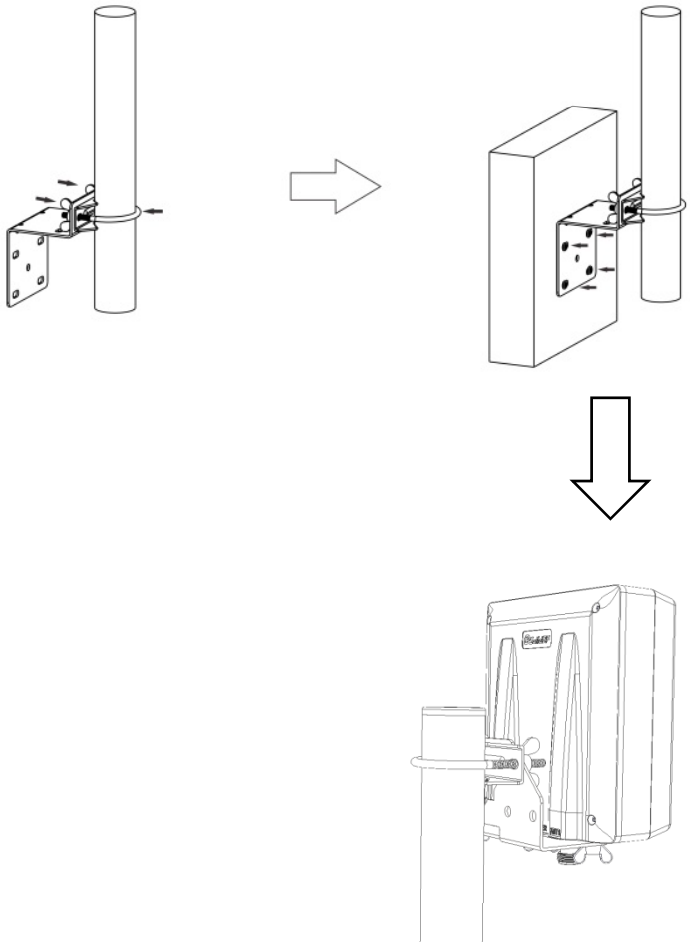

c. Connect the cable to the outdoor antenna

- Make sure connectors are well screwed in
- Seal the connectors with glued tape

Recommended Installation Position

ARRANGE BOOSTER

a. Choose right position

- Be sure to be far from any heat source
- In a ventilated dry place, temperature range should be from -25 ℃ to +50 ℃

b. Mount the booster as the picture shows

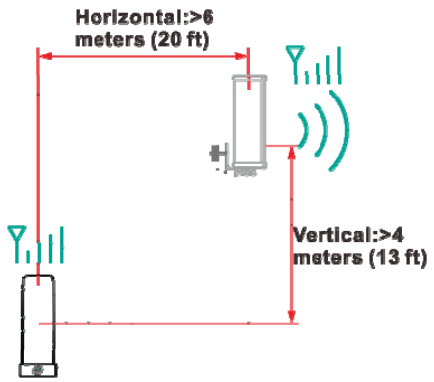

Technical Specification

		LTE (band 12/17)	LTE (band 13)	Cellular (band5)	PCS (band 2/25)	AWS (band 4)
Frequency (MHz)	Uplink	698-716	776-787	824-849	1850-1915	1710-1755
	Downlink	728-746	746-757	869-894	1930-1995	2110-2155
Noise figure	<5dB					
In-band Flatness	<8dB					
Weight	0.7Kg					
EIRP	≤1W					
Operating temperature	-31 °F(-35℃) to 122°F (50℃).					
Current	≦DC5.9V/3A					

Coverage Area

Note: Any cell phone booster has a limit of amplification power. This depends on the original output power of the closest cell tower.

Power level at the outdoor antenna location	Coverage Area (sq. ft.)
Strong (5 bars on the cellphone)	10000
Medium (3~4 bars on the cellphone)	3000
Weak (1~2 bars on the cellphone)	800

ATTENTION: Self Oscillation

We strongly recommend it must achieve the Minimum Required Separation Distance for the installation. The improper installation could result in possible Self Oscillation.

Minimum Required Separation Distance (MRSD)： 6 meters (20 ft) distance and 4 meters (13 ft) vertical height distance.

What is Self Oscillation:

When the antennas are too close, they could pick up each others signals, creating a feedback loop condition, which is called Self Oscillation.

By FCC regulations, the cell phone booster would automatically detect this condition and immediately shut down to prevent Self Oscillation from damaging the cellular network.
(see TroubleShooting Booklet)

Antennas Installation Recommended

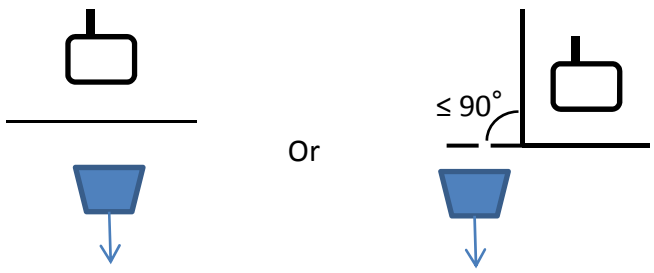

How to correct Self Oscillation:

If the booster detects Self Oscillation, it will not operate until the condition is corrected. One way to correct Self Oscillation is to increase separation distance between the antennas until the sufficient separation distance is achieved. Also **the antennas can NOT directly face each other.**

Antennas Installation Prohibited

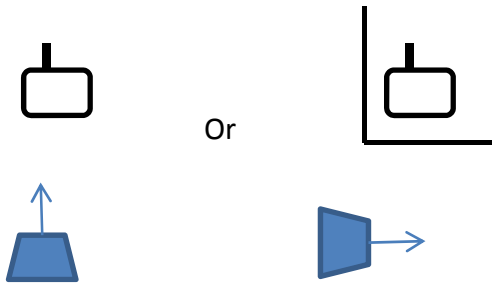

Why is it so important to prevent Self Oscillation:

The Self Oscillation could cause interference to the cellular network, The FCC regulations extremely prohibit cell phone booster users from causing interference to the cellular networks. If you were contacted by the FCC or any wireless provider – yours or any other – and told your cell phone booster is causing interference, you must shut it down until you can fix the interference problem. Under most situation, it is Self Oscillation problem.
Please refer to:
https://www.fcc.gov/wireless-telecommunications/signal-boosters/faq/signal-boosters-faq.

Quick Troubleshooting

Correct functioning:

- Power Light should be solid green
- Every time the booster is powered on, the Status Light will be lit in red for several times. It will turn off eventually.
- Status Light is off (no mobile devices are in use) or flashing (one or more mobile devices are in use).

Incorrect functioning: *(Please see The Troubleshooting booklet for the details)*

- Flashing Power Light: please contact the technical support
- Status Light: indicate the booster condition

  SOLID RED – self oscillation is occurring. You must switch off the booster and check the booster system is properly installed by re-checking each step in this manual.

  SOLID GREEN – the cable from the inside unit to the outside unit is not correctly connected.

  LIGHT IS OFF WITHOUT SIGNAL IMPROVEMENT - *(Please see The Troubleshooting booklet for the details)*

Weather condition:

The booster outside unit, include the amplifier and the outside antenna have an integrated design. Each are waterproof and no matter rain, snow or fog, they will work properly. However extreme hot or cold temperatures may cause problems to the booster. Optimal functioning will occur from -20 ℃ to +50 ℃. Too high or low temperatures beyond this range will cause the booster to lower output power to avoid damage.

If you can not fix the problem, please contact the technical support or the reseller.

SolidRF Technical Support: Support@SolidRF.ca

Find Strongest Signal

Use Cell Phone Only:

- Check the signal indicator on the cell phone display, it takes up to 30 seconds to reset a new reading. Or place calls from several locations outside the building.
- Read signal strength with numerical value (Smart Phone Only):

  iPhone: Dial *3001#12345#* then tap the CALL button, a negative number in the upper left corner.

  Android Phone: Go to Setting – About Phone – Status (SIM Status) – Signal Strength

  It would a negative number instead of the five dots, the range is from -120 (weak) to -65 (strong)

Use Cell Phone During Test Installation:

- One person adjusts the outside directional antenna small angle at a time. Allow 30 seconds for the phone to react with each turn.
- Second person read the signal strength on the cell phone inside the building.

See Test Installation Section for Find A Cell Tower Nearby

Warnings and Recommendations

- ⚠ Warning: This consumer booster is for Consumer use only.
- ⚠ Warning: Unauthorized antennas, cables, and/or coupling devices are prohibited by FCC regulations. Please contact FCC for details: 1-888-CALL-FCC.
- ⚠ Warning: Outside antenna orientation must be back side of inside antenna is to prevent the indoor antenna receiving the signal emitted by outside antenna. Otherwise it will cause self-oscillation of booster.
- ⚠ Warning: RF safety, any antenna used with this device must be located at 20 cm (8 inches) away from persons or by bystanders.
- ⚠ Warning: It will damage the mobile device and the booster if connect them with a cable directly.
- ⚠ Warning: Use the power supply provided by SolidRF only. Other power supplies may cause damage of the booster.
- ⚠ Warning: Antenna installation is restricted to 10 meters or less height above ground, even if the antenna is installed inside when used with a mobile device that operates in the 1710-1755 MHz band. Violation of this requirement may subject the owner of the booster to potential FCC enforcement actions.
- ⚠ Warning: Never point the front of a directional antenna toward the inside antenna. Verify that both the outside antenna and the inside antenna are connected to the booster before powering up the booster.

(EN) RF Exposure: The manufacturer's rated output power of this equipment is for single carrier operation. For situations when multiple carrier signals are present, the rating would have to be reduced by 3.5 dB, especially where the output is re-radiated and can cause interference to adjacent band users. This power reduction is to be by means of input power or gain reduction and not by an attenuating at the output of the device.
(FR) Exposition RF: La puissance de sortie nominale du fabricant de cet équipement est pour le fonctionnement d'une seule porteuse. Pour les situations où plusieurs signaux de porteuse sont présents, la note devrait être réduite de 3,5 dB, en particulier lorsque le signal de sortie est rayonné et peut causer des interférences aux utilisateurs de bande adjacents. Cette réduction de puissance doit se faire au moyen d'une puissance d'entrée ou d'une réduction de gain et non pas par un atténuateur à la sortie du dispositif.

(EN) This device complies with Industry Canada license-exempt RSS standard(s). Operation is subject to the following two conditions: (1) this device may not cause interference, and (2) this device must accept any interference, including interference that may cause undesired operation of the device.
(FR) Le présent appareil est conforme aux CNR d'Industrie Canada applicables aux appareils radio exempts de licence. L'exploitation est autorisée aux deux conditions suivantes : (1) l'appareil ne doit pas produire de brouillage, et (2) l'utilisateur de l'appareil doit accepter tout brouillage radioélectrique subi, même si le brouillage est susceptible d'en compromettre le fonctionnement.

(EN) This system has been evaluated for RF Exposure per RSS-102 and is in compliance with the limits specified by Health Canada Safety Code 6. The system must be installed at a minimum separation distance from the antenna to a general bystander of 8 inches (20 cm) to maintain compliance with the General Population limits.
(FR) L'exposition aux radiofréquences de ce système a été évaluée selon la norme RSS -102 et est jugée conforme aux limites établies par le Code de sécurité 6 de Santé Canada. Le système doit être installé à une distance minimale de 8 pouces (20 cm) séparant l'antenne d'une personne présente en conformité avec les limites permises d'exposition au grand public.

FCC Statement:

Description of network protection features:

This booster including safeguards to protect the cellular network from interference. Each Signal Booster is individually tested and factory set to ensure FCC compliance.

1. The Signal Booster cannot be adjusted without factory reprogramming or disabling the hardware.
2. The Signal Booster will amplify, but ***ONLY*** incoming and outgoing signals in order to increase coverage of authorized frequency bands.
3. If the Signal Booster is not in use for five minutes, it will reduce gain until a signal is detected.
4. If a detected signal is too high in a frequency band, or if the Signal Booster detects an oscillation, the Signal Booster will automatically turn the power off on that band.
5. For a detected oscillation the Signal Booster will automatically resume normal operation after a minimum of 1 minute. After 5 times consecutive such automatic restarts, if the detected oscillation still remains, any problematic bands are permanently shut off until the Signal Booster has been manually restarted by reconnecting power supply to the Signal Booster.
6. Noise power, gain, and linearity are maintained by the Signal Booster's microprocessor.

This is a CONSUMER device
BEFURE USE ,you MUST REGISTER THIS DEVICE with your wireless provider and have your provider's consent .Most wireless provider consent to the use of signal boosters .Some provider may not consent to the use of this device on their network .If you are unsure, contact your provider. You MUST operate this device with approved antenna and cables as specified by the manufacturer .Antennas MUST be installed at least 20cm (8inches) from any person. You MUST cease operating this device immediately if requested by the FCC or a licensed wireless service provider. WARNING.E911 location information may not be provided or may be inaccurate for calls served by using this device. This device may be operated ONLY in a fixed location for in -building use.

This device complies with Part 15 of FCC Rules. Operation is subject to the following two conditions: (1) this device may not cause harmful interference, and (2) this device must accept any interference received, including interference that may cause undesired operation.

Contact information for providers

A subscriber must have the consent of a wireless provider to operate a consumer signal booster. Please register your booster with your wireless service provider, refer to contact information for providers:

Sprint:
signalbooster@sprint.com
T-Mobile:
www.T-Mobile.com/BoosterRegistration
https://support.t-mobile.com/docs/DOC-9827
Verizon:
http://www.verizonwireless.com/wcms/consumer/register -signal-booster.html
AT&T:
https://securec45.securewebsession.com/attsignalbooster.com/
U.S. Cellular:
http://www.uscellular.com/uscellular/support/fcc -booster-registration.jsp
Metro PCS
https://www.metropcs.com/support/signal -booster

ISEDC Statement:

Safety Guidelines

To uphold network protection standards and ensure compliance, all active cellular devices must maintain a separation distance of at least six feet between the inside unit antenna and outside unit antenna and at least four feet of separation distance from the inside unit. Use only the power supply provided in this package. Use of a non-SolidRF product or accessory may result in damage to the equipment or components of the equipment. The inside unit is designed for use in an indoor, temperature-controlled environment (less than 100 degrees Fahrenheit). It is not intended for use in attics or similar locations where temperatures may be in excess of that range.

RF Safety Warning: Any antenna used with this device must be located at least 8 inches from all persons.

This is a CONSUMER device

BEFORE USE , you **MUST REGISTER THIS DEVICE** with your wireless provider and have your provider' s consent .Most wireless provider consent to the use of signal boosters .Some providers may not consent to the use of this device on their network .If you are unsure ,contact your provider.

In Canada,**BEFORE USE**,You must meet all requirements set out in ISED CPC-2-1-05.You **MUST** operate this device with approved antenna and cables as specified by the manufacturer .Antennas **MUST** be installed at least 20cm (8inches) from(i.e., **MUST NOT** be installed within 20 cm of)any person.

You **MUST** cease operating this device immediately if requested by the ISED or a licensed wireless service provider.

WARNING.E911 location information may not be provided or may be inaccurate for calls served by using this device.

This device may be operated **ONLY** in a fixed location for in-building use.

CPC-2-1-05 — Zone Enhancers - Spectrum management and telecommunications
http://www.ic.gc.ca/eic/site/smt-gst.nsf/eng/sf08942.html

Mobile phone is the minimum distance to use indoor antenna	
Inside server antenna types	Minimum separation distances D (m)
Ceiling mounted (e.g., dome-type) antennas	2
Wall mounted (i.e., panel or other type) antennas	1.0 or 2*
Table top antennas	1.0

Antenna Kitting Information

Component	Type specification	Gain/Loss					Manufacturer
		LTE-707	LTE-781	800MHz	1900MHz	1700MHz\2100MHz	
Outside Cable	LMR240 45Feet	2.9dB	3.15dB	3.38dB	4.87dB	4.87dB\5.2dB	Suirongcable
Outside Cable	SRLMR400-30NN 30Feet	1.9dB	1.9dB	1.95dB	2.9dB	2.55dB\2.9dB	Suirongcable
Inside Cable	RG6FF 90Feet	4.3dB	4.6dB	5dB	7.6dB	6.6dB\8.4dB	Suirongcable
Inside Cable	RG6FF 75Feet	3.6dB	3.8dB	4.2dB	6.3dB	5.5dB\7dB	Suirongcable
Inside Cable	RG6FF 60Feet	2.9dB	3.0dB	3.3dB	5dB	4.4dB\5.6dB	Suirongcable
Inside Cable	RG6FF 45Feet	2.2dB	2.3dB	2.5 dB	3.8 dB	3.3 dB\4.2dB	Suirongcable
Inside Cable	LMR240 90Feet	5.85dB	6.3 dB	6.75 dB	9.9 dB	9.9dB\10.35dB	Suirongcable
Inside Cable	LMR240 75Feet	4.88dB	5.25dB	5.63dB	8.25dB	8.25\8.63 dB	Suirongcable
Inside Cable	LMR240 60Feet	3.9dB	4.2dB	4.5dB	6.6dB	6.6 dB\6.9 dB	Suirongcable
Inside Cable	LMR240 45Feet	2.9dB	3.15dB	3.38dB	4.87dB	4.87dB\5.2dB	Suirongcable
Inside Cable	SRLMR400-30NN 30Feet	1.9dB	1.9dB	1.95dB	2.9dB	2.55dB\2.9dB	Suirongcable
Inside Cable	SRLMR400-75NN 75Feet	4.2dB	4.2dB	4.4dB	6.1dB	5.8dB\6.5dB	Suirongcable
Inside Cable	SRG58-30FN 30Feet	4.5dB	4.5dB	4.9dB	7.6dB	7.2dB\8dB	Suirongcable
Inside Cable	SRLMR400-20NN 20Feet	1.3dB	1.3dB	1.35dB	1.8dB	1.8dB\1.9dB	Suirongcable
Inside Cable	SRG58-15FN 15Feet	2.35dB	2.4dB	2.56dB	3.9dB	3.7dB\ 4.1dB	Suirongcable
Inside Cable	SRLMR400-30NN 30Feet	1.9dB	1.9dB	1.95dB	2.8dB	2.55dB\2.9dB	Suirongcable
Outside Antenna	ANT050701	7dBi	7dBi	7dBi	10dBi	10dBi\10dBi	Shenzhen Dachi Communications Co., Ltd.
Outside Antenna	ANT010901	9dBi	9dBi	9dBi	9dBi	9dBi	Shenzhen Dachi Communications Co., Ltd.
Outside Antenna	ANT010701	9dBi	9dBi	9dBi	9dBi	9dBi	Shenzhen Dachi Communications Co., Ltd.
Outside Antenna	ANT060302	3dBi	3dBi	3dBi	3.5dBi	3.5dBi\3.5dBi	Shenzhen Dachi Communications Co., Ltd.
Outside Antenna	ANT030301	3dBi	3dBi	3dBi	3dBi	3dBi	Shenzhen Dachi Communications Co., Ltd.
Outside Antenna	ANT060302	3dBi	3dBi	3dBi	3.5dBi	3.5dBi\3.5dBi	Shenzhen Dachi Communications Co., Ltd.
Outside Antenna	ANT030301	3dBi	3dBi	3dBi	3dBi	3dBi	Shenzhen Dachi Communications Co., Ltd.
Inside Antenna	ANT050701	7dBi	7dBi	7dBi	10dBi	10dBi\10dBi	Shenzhen Dachi Communications Co., Ltd.
Inside Antenna	ANT010901	9dBi	9dBi	9dBi	9dBi	9dBi	Shenzhen Dachi Communications Co., Ltd.
Inside Antenna	ANT010701	9dBi	9dBi	9dBi	9dBi	9dBi	Shenzhen Dachi Communications Co., Ltd.
Inside Antenna	ANT060302	3dBi	3dBi	3dBi	3.5dBi	3.5dBi\3.5dBi	Shenzhen Dachi Communications Co., Ltd.
Inside Antenna	ANT040301	3dBi	3dBi	3dBi	3dBi	3dBi	Shenzhen Dachi Communications Co., Ltd.
Inside Antenna	ANT080301	3dBi	3dBi	3dBi	3dBi	3dBi	Shenzhen Dachi Communications Co., Ltd.
Inside Antenna	ANT080302	3dBi	3dBi	3dBi	3dBi	3dBi	Shenzhen Dachi Communications Co., Ltd.
Inside Antenna	ANT060301	3dBi	3dBi	3dBi	3dBi	3dBi	Shenzhen Dachi Communications Co., Ltd.
Inside Antenna	ANT060303	3dBi	3dBi	3dBi	3dBi	3dBi	Shenzhen Dachi Communications Co., Ltd.
Inside Antenna	ANT070101	1dBi	1dBi	1dBi	1dBi	1dBi	Shenzhen Dachi Communications Co., Ltd.
Inside Antenna	SR-21300100	3dBi	3dBi	3dBi	3.5dBi	3.5dBi\3.5dBi	Shenzhen Dachi Communications Co., Ltd.
Lightning Protector	ACC010101	0.1 dB	0.1 dB	0.1 dB	0.18dB	0.16dB\0.2dB	Shenzhen Dachi Communications Co., Ltd.
All equivalent antennas and cables are suitable for use with the SolidRF booster.							

Default combination

TRUE5-A+ ANT050701 + LMR240 45Feet + LMR240 45Feet + ANT040301