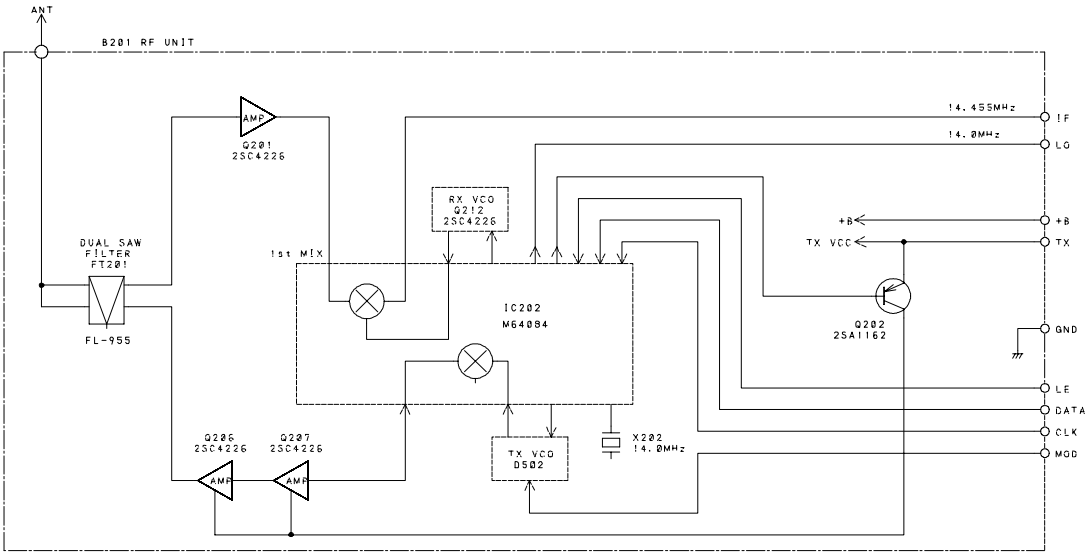

DESIGN	DRAWN. BY	UNIDEN No.	MODEL No.
	98. 7. 22	UC208ZL	43-1107
	ONOH	TITLE	BASE RF UNIT BLOCK DIAGRAM
CHECK. BY	APPRO. BY		
		DRAWING No.	
REV. No	1	UNIDEN CORP.	

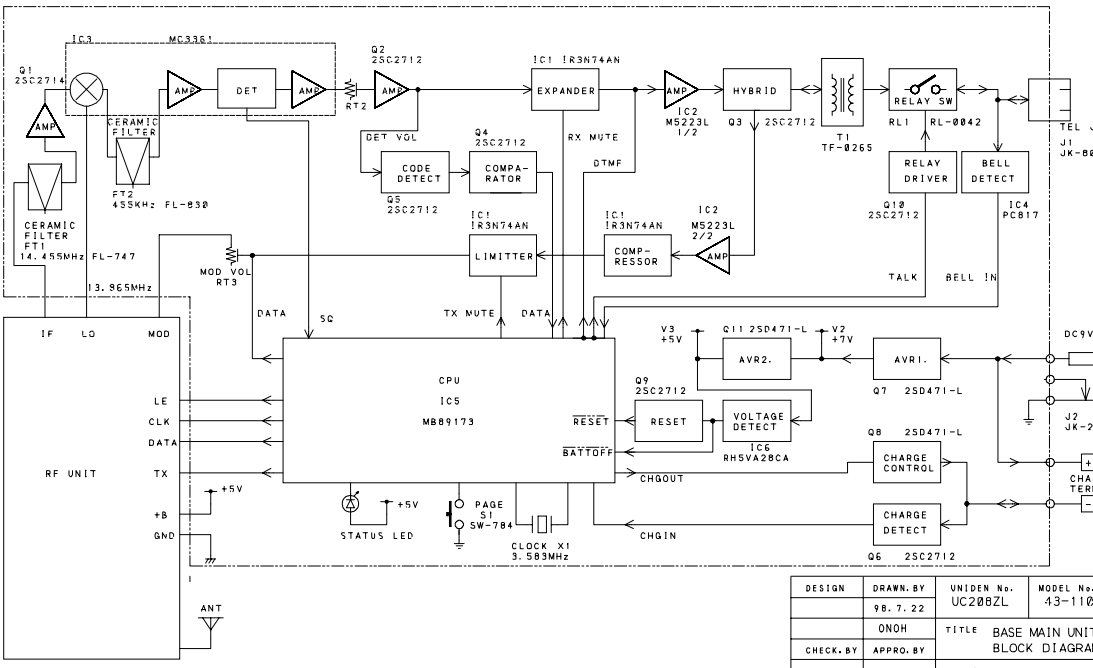

DESIGN	DRAWN. BY	UNIDEN No.	MODEL No.
	98. 7. 22	UC208ZL	43-1107
	ONOH	TITLE	BASE MAIN UNIT BLOCK DIAGRAM
CHECK. BY	APPRO. BY		
		DRAWING No.	
REV. No		UNIDEN CORP.	

IC601