NORTEL NETWORKS

EXHIBIT 5

User Documentation

Applicant: Northern Telecom Ltd.

For Type Acceptance/Certification on:

AB6NT800FRM

This document contains Proprietary Information of Northern Telecom Limited. This information is considered to be **CONFIDENTIAL** and should be treated appropriately.

411-2133-110

CDMA

Metro Cell
Functional Description Manual

NBSS7.1 Prototype 01.04 November 1998

PROTOTYPE

NORTEL

NORTHERN TELECOM

CDMA

Metro Cell

Functional Description Manual

Product release: NBSS7.1
Document release: Prototype 01.04
Date: November 1998
Document Number: 411-2133-110

© 1998 Northern Telecom

Printed in the United States of America

NORTHERN TELECOM CONFIDENTIAL: The information contained in this document is the property of Northern Telecom. Except as specifically authorized in writing by Northern Telecom, the holder of this document shall keep the information contained herein confidential and shall protect same in whole or in part from disclosure and dissemination to third parties and use same for evaluation, operation, and maintenance purposes only.

Information is subject to change without notice.

Metro Cell, DMS-MTX, and MAP are trademarks of Northern Telecom.

Publication History

June 1998

01.01 Draft release.

Contents

Related documents xi

Introduction to Metro Cell 1

Metro Cell product objectives 1
Key features 1
Physical layout of outdoor Metro Cell 6
Physical layout of Indoor Metro Cell 8
Digital equipment architecture 12
Environmental control 14
    Thermal design 14
Indoor digital rack (DR) of the Metro Cell 17
Outdoor radio enclosure (RE) physical architecture 19
Module interrelationships 22

Subsystem description 25

Outdoor Metro Cell power systems 25
    DEI physical layout 25
    Backhaul interface 26
    Surge protection 26
    AC power entry and distribution 26
    DC power and distribution 27
    Power, protection and grounding architecture 28
    Backup batteries and sensors 28
Indoor Metro Cell power systems 30
    AC power Input 30
    DC power input 33
    DC power distribution (FRMs) 33
Indoor and outdoor Metro Cell distribution module 35
    Battery management 39
    Power distribution 40
    Grounding 42
    Battery backup 42
CEM principle functions 43
    CEM Interconnect board (IB) 47
    CEM dc voltages 47
Timing and frequency systems 47
    Global positioning system timing module (GPSTM) 47
Antennas 50
    Gps antennas 50

Control Module (CM) 50
CDMA traffic systems 51
CORE 51
Flexible RF modules (FRM) 55
Transmit / Receive Module (TRM) 59
Duplexer/LNA Preselector/LNA Module (DPM) - 1900 MHz 60
Duplexer/LNA module - 800 MHz 62
1900 FRM Triplexer Module (FRMTM) 63
Electro-optical Module (EOM) 64
Power amplifier (PAM) 65
Fan / alarm controller board 65
Basestation communication network (BCN) distribution 67
DE / RF module signalling 70
Signal flow 70
Forward link baseband signal flow 70

Field Replaceable Units (FRU) 71
Outdoor Metro Cell 72

Software 77

Specifications 79

Glossary 81

Figures

Figure 1 Metro Cell modular overview 3
Figure 2 System interconnect 4
Figure 3 System interconnect layout 5
Figure 4 Outdoor Metro Cell digital enclosure 7
Figure 5 Outdoor Metro Cell Physical Layout 8
Figure 6 Indoor Metro Cell Packaging 9
Figure 7 Indoor EOM to CORE optical link cable routing DR/RR collocated 10
Figure 8 FRM optical link cable routing 11
Figure 9 EOM to CORE fiber cable assembly 12
Figure 10 Digital shelf (bottom) graphic 13
Figure 11 Outdoor Metro Cell layout of thermal control system components 16
Figure 12 Digital rack 17
Figure 13 Indoor cabinet airflow 18
Figure 14 Radio enclosure 21
Figure 15 Module relationships 23
Figure 16 Layout of components in DEI 25
Figure 17 AC circuit breaker panel box in the DEI 27
Figure 18 Power protection and grounding block diagram 29
Figure 19 Metro Cell power and grounding interconnections 30
Figure 20 Indoor AC power architecture 31
Figure 21 AC system bulkhead 32
Figure 22 Indoor ac Metro Cell packaging 33
Figure 23 Indoor dc power architecture 34
Figure 24 Indoor system dc bulkhead 35
Figure 25 Power shelf (graphic) 36
Figure 26 Rectifier shelf - cover closed 37
Figure 27 Open rectifier shelf 38
Figure 28 Breaker sticker 39
Figure 29 Power distribution block diagram 41
Figure 30 Battery storage frame 42
Figure 31 Digital equipment shelf (top) graphic 44
Figure 32 CEM shelf 45
Figure 33 CEM diagram 46
Figure 34 Timing distribution 49
Figure 35 Global positioning system timing module (GPSTM) 50
Figure 36 NTGS30AA CORE module and CORE module with open faceplate 53
Figure 37 CORE block diagram 54
Figure 38 Flexible RF module 56
Figure 39 Layout of FRM connectors 57
Figure 40 Flexible radio module (FRM) block diagram 59
Figure 41 Transmit / receive module internal layout 60
Figure 42 General DPM drawing - 1900 MHz 61
Figure 43 General 800 DPM drawing 63
Figure 44 Electro-optical module 64
Figure 45 Power amplifier module - internal layout 66

Figure 46 Basestation communication network (BCN) distribution 69
Figure 47 DE/RF module signalling 70

Tables

Table 1 FRM indicator assignments 67
Table 2 Outdoor Metro Cell FRU list 72
Table 3 Indoor Metro Cell FRU list 73
Table 4 FRM Metro Cell FRU list 74

About this document

This document describes in detail the architecture and basic operation of the Multi Carrier Base Station Transceiver Subsystem (Metro Cell). It is organized as follows:

- Introduction to Metro Cell—CDMA concepts are described in general terms, and multicarrier concepts are introduced.
- Metro Cell high-level overview—the physical layout of the Metro Cell is described here, beginning with cabinets (DE and FRM) then individual shelves. This section also includes a complete listing of FRUs and their PECs.

Subsystem description—This section describes the Metro Cell in terms of the functional relationships of its subsystems; it gives you a framework for understanding what the Metro Cell does, and relates the physical components of the Metro Cell to what they do as part of the overall product.

FRU-level descriptions are provided, and significance of indicators and configurable hardware options are described.

The following subsystems are covered:

- Power, protection and grounding (batteries, rectifiers);
- Environmental control systems (heating, cooling);
- Timing and frequency systems (GPSTM);
- Backhaul (CM—T1/E1, BCN);
- CDMA Traffic systems (CEMs, CORE);
- RF system (FRM: TRM, HPA, DPM, EOM, fans);
- Hardware alarm reporting systems (AIM in DE, AIM—or alternate design implementation—in FRM cabinet);
- Signal distribution and optical interface (CORE, EOM)
- Signal path architecture.
- Specifications—information such as height, weight, power, compliance, and capacity.

- List of terms—a listing of acronyms, abbreviations, and pertinent terminology with definitions and descriptions for each.

Related documents

BSM User's Guide, NTP-411-2133-103

BSM Configuration Management User's Guide 411-2133-104

CDMA NBSS Software History and Delta for Planners Manual, 411-2133-199

Fault Management and Recovery Guide, 411-2133-545

Metro Cell Maintenance and Troubleshooting Guide, 411-2133-550

NBSS Alarm Reference Manual, 411-2133-530

Introduction to Metro Cell

The Metro Cell is NORTELs second generationWireless CDMA Multi-Carrier Base Transceiver Station product. This family of products is designed to cover outdoor and indoor deployment opportunities at both 800 and 1900 MHz.

Metro Cell product objectives

- to offer a product which can address multi-carrier deployments while offering reduced entry cost for a single frequency system.
- to provide a system which offers a simple and well defined upgrade path for both the existing product and future generations.
- to offer a product which has the flexibility to be used within numerous different applications with little or no additional development.
- to reduce BTS maintenance, operating and installation costs
- offer superior system performance.

Key features

The Metro Cell incorporates the following key features:

- outdoor operation.
- indoor operation.
- AC operation or DC operation
- digital system supports up to 4 RF carriers from one platform.
- capable of operating cellular (800MHz) and PCS (1900 MHz) band.
- remotable RF equipment with a digital interconnect link via optical
- EMC containment at a module level.
- reduced interconnect (“skinny”) backplane to simplify interconnect and product packaging evolution.
- overlays with current CDMA products.
- optional redundancy is available.
- extensive re-use of software from existing CDMA BTS.

- the Metro Cell design is modular in nature to allow for simple, cost effective expansion from single to multi-carrier operation.
- complete digital system up to electrical IF stage.
- channelizer in RF equipment - performs transceiver level DSP and channelization of the CDMA forward and reverse links.
- fiber optic interface for I & Q baseband routing.
- environmentally hardened IF - RF TX and RX modules.
- HPA is an ultra-linear amplifier which meets strict emission requirements of IS95.
- digital equipment-to-radio equipment separation of up to 200 m. or approximately 650 ft. using optical fiber.

A diagram of the modular overview of a Metro Cell is shown in Figure 1.

Figure 1
Metro Cell modular overview

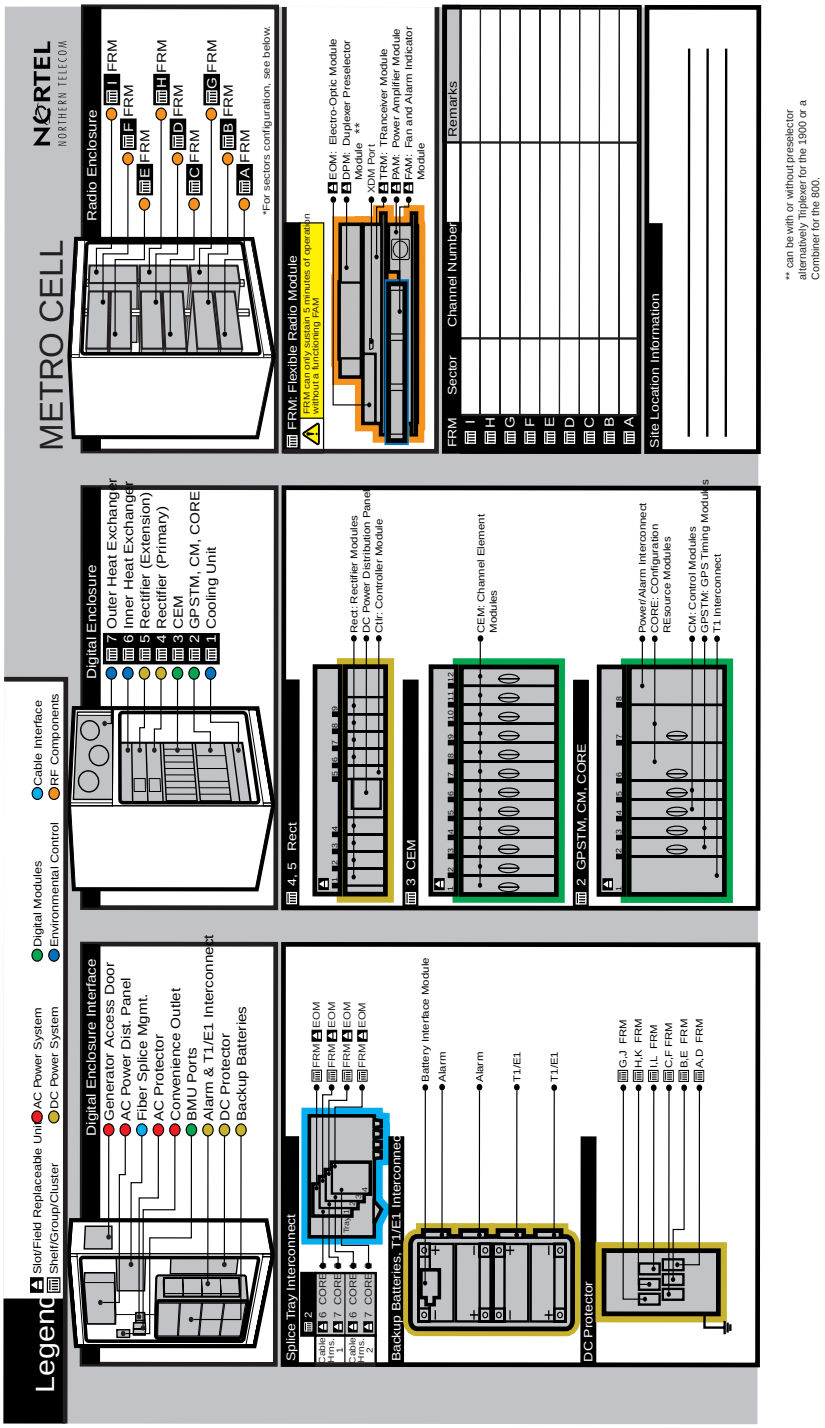

Figure 2 is a block diagram showing how the Metro Cell interfaces to the BSC and MTX.

Figure 2
System interconnect

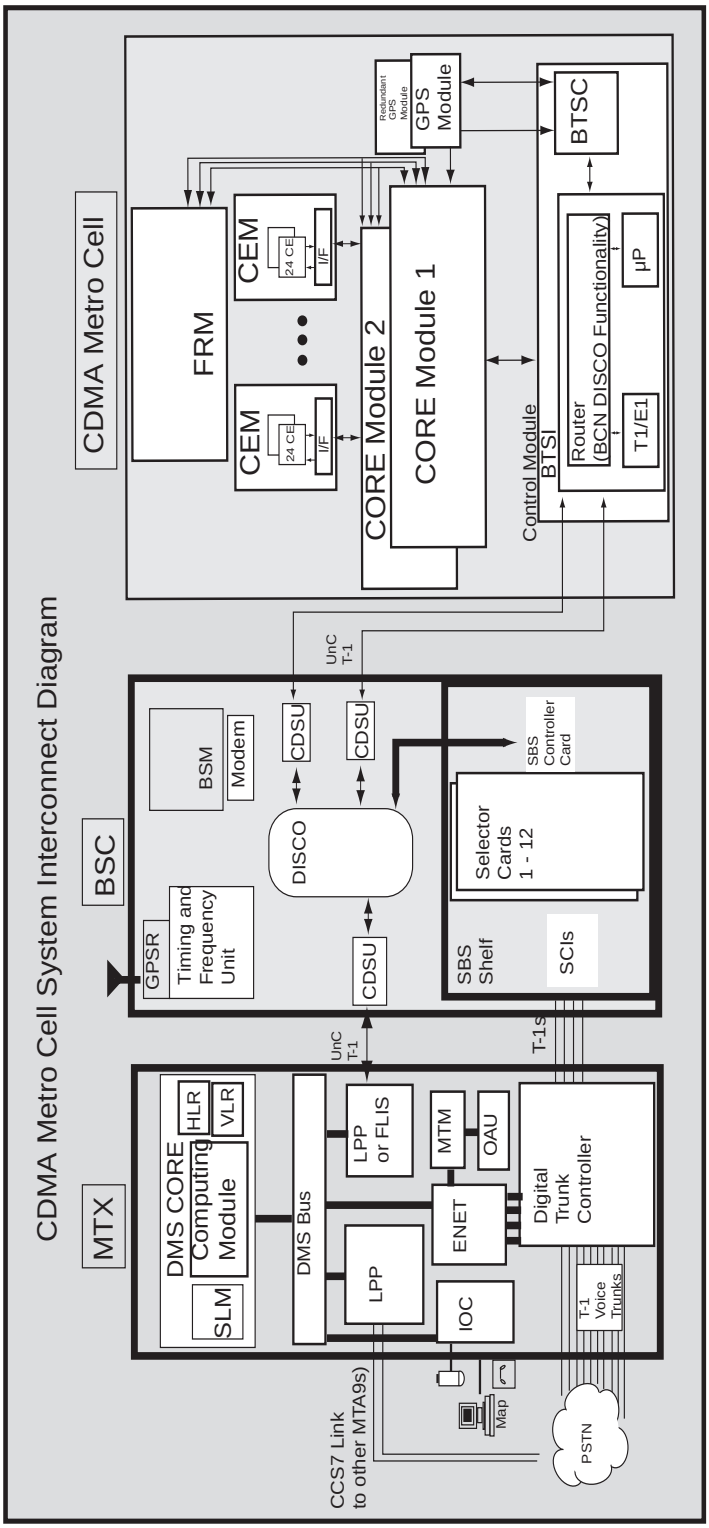

Figure 3 shows the high level relationship between the Metro Cell and Mobile Switching Center (MSC).

Figure 3
System interconnect layout

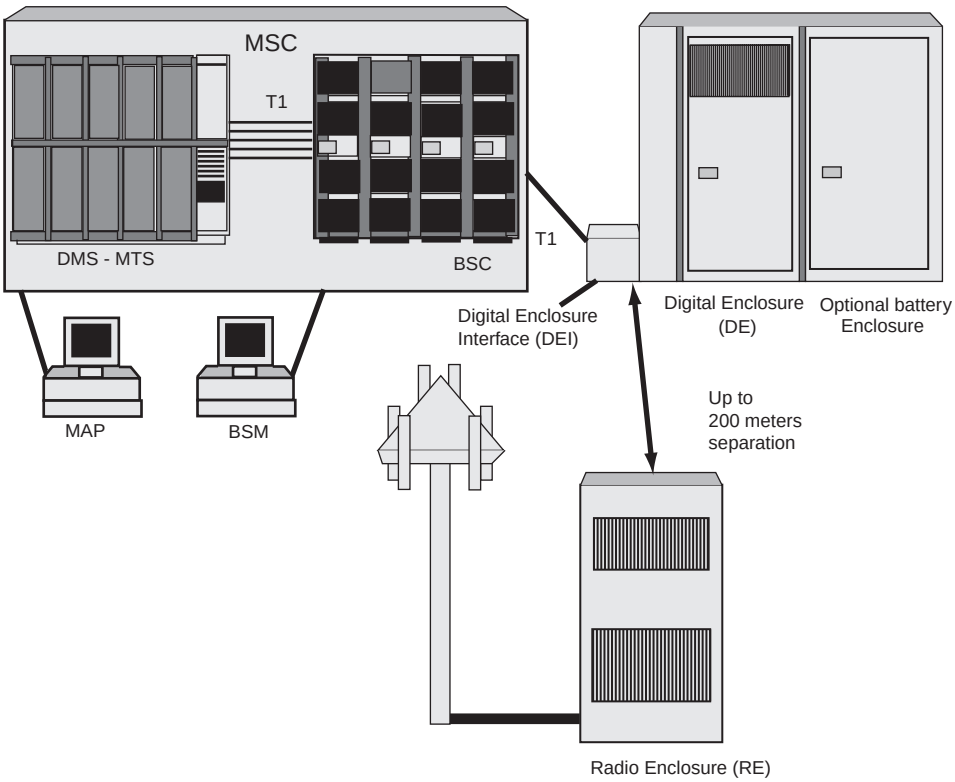

Physical layout of outdoor Metro Cell

The Metro Cell 1900 Outdoor consists of two main cabinets (DE/RE) and exploits modular design concepts. Five types of modules are defined: Flexible Radio Modules (FRM), Channel Element Modules (CEM), Control Modules (CM), COnfiguration REsource modules (CORE), and Global Positioning System Timing Modules (GPSTM).

The CEM, CM, CORE, and GPSTM are housed together in a digital frame. The RF equipment is packaged in a separate, environmentally hardened cabinet, and may be located remotely from the digital cabinet. This cabinet accommodates up to nine FRM modules, each of which supports the RF air interface for a single CDMA sector. FRM module frequency assignments are defined on a per module basis, so a fully populated FRM cabinet could support three carriers/three sectors or some other combination up to nine sectors. Accommodating a fourth carrier in a three-carrier/three sector Metro Cell requires a second FRM enclosure with up to three modules.

The Digital Enclosure cabinet for the outdoor version is shown in Figure 4 and Figure 5.

Figure 4
Outdoor Metro Cell digital enclosure

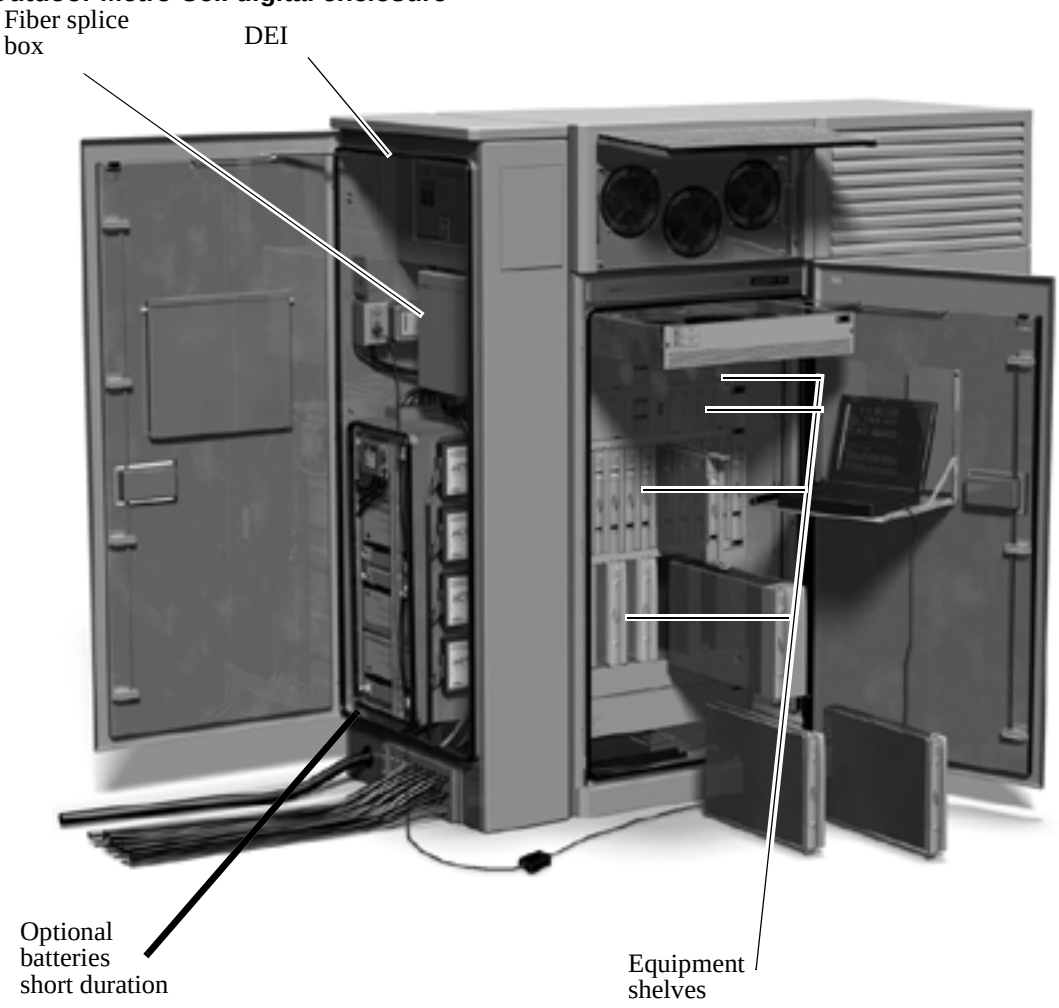

Figure 5
Outdoor Metro Cell Physical Layout

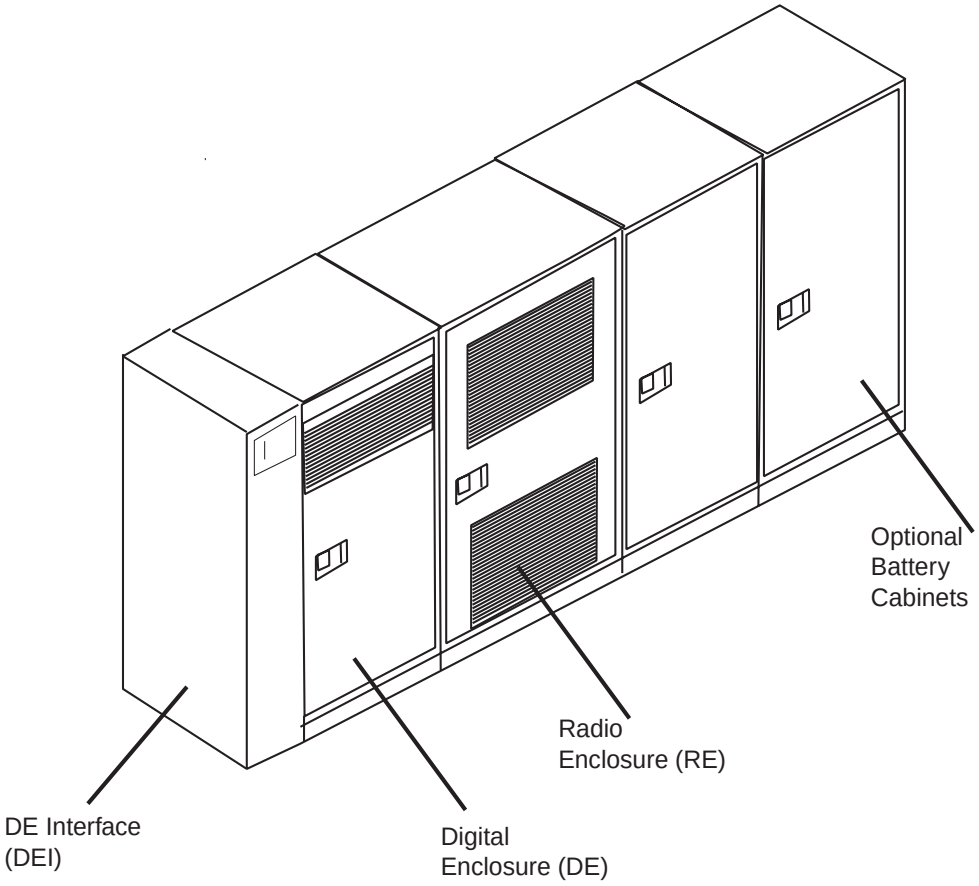

Physical layout of Indoor Metro Cell

The CEM, CM, CORE, and GPSTM modules are housed together in a digital rack. The Digital Rack (DR) houses the AC rectifiers or DC breaker panel for the required power supply system. The DR can also accommodate 3 FRMs; thus resulting in a fully equipped 3-sectored, 1 carrier Metro Cell in one rack.

The overall physical layout is shown in Figure 6.

Figure 6
Indoor Metro Cell Packaging

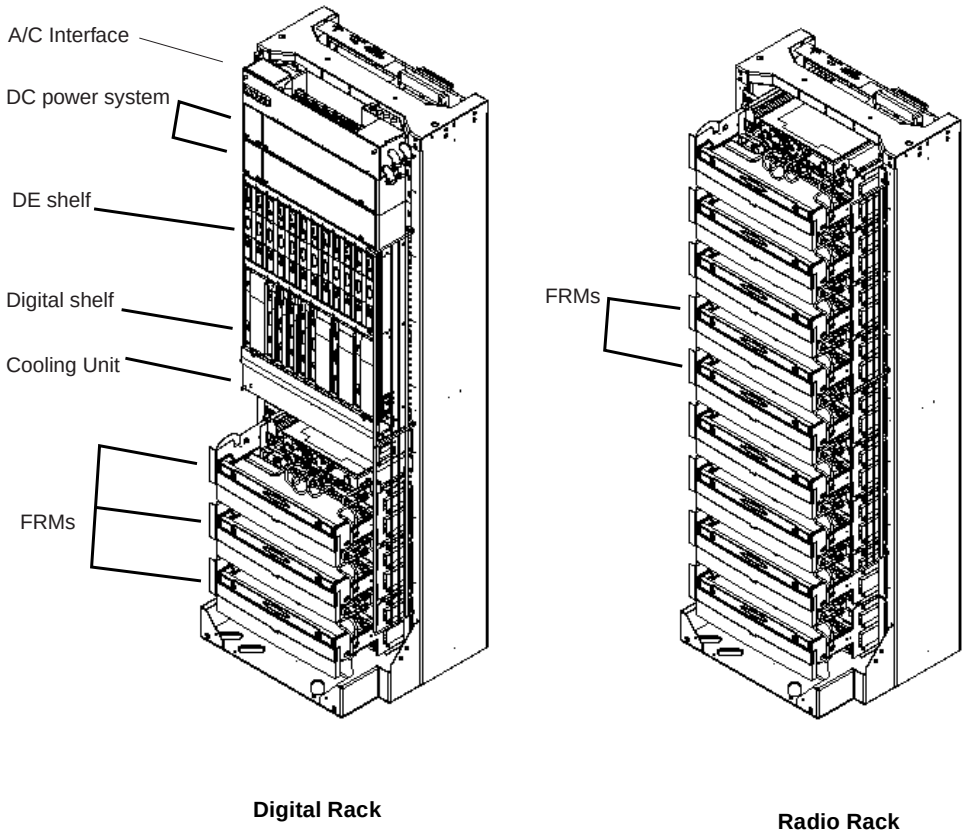

Each FRM is connected to the digital rack via a four-fiber optical cable carrying digital Tx and Rx baseband data and control signalling. At the digital rack, these cables are terminated directly on the CORE modules (not at the bulkhead).

Connectorized fiber-optic patch cables are provided to support configurations in which the digital and radio racks are located side-by-side or up to 650 feet apart. For applications where the radio rack is located farther away from the digital rack, cable splicing is required. The connectorized patch cables can be spliced to FRM cables of length 20 meters or 200 meters. A splicing tray can be mounted either on a wall or in the digital rack. The maximum cable run length is 200 meters.

Each FRM shelf is configured with an integral fiber management bracket designed to route and store excessive cable slack within each FRM shelf.

Cables are routed from the Radio Rack (RR) to the Digital Rack (DR) via a fiber cable routing tube and / or channel located at the bottom of the DR bay.

The optical link scenario is illustrated in Figure 7, Figure 8 and Figure 9.

Figure 7
Indoor EOM to CORE optical link cable routing DR/RR collocated

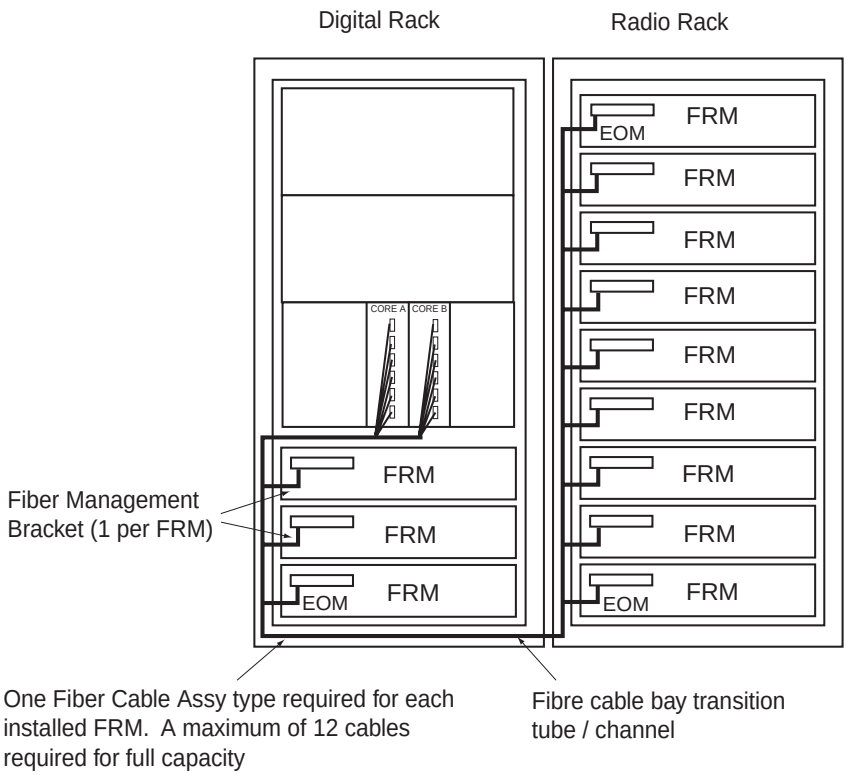

Figure 8
FRM optical link cable routing

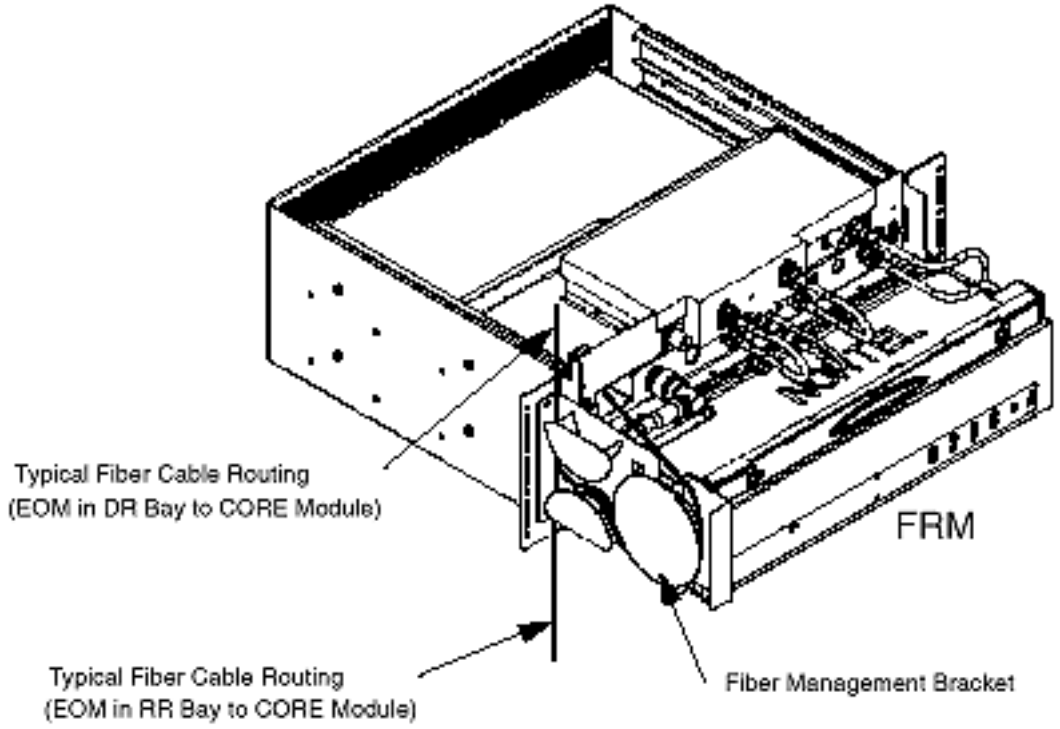

Figure 9
EOM to CORE fiber cable assembly

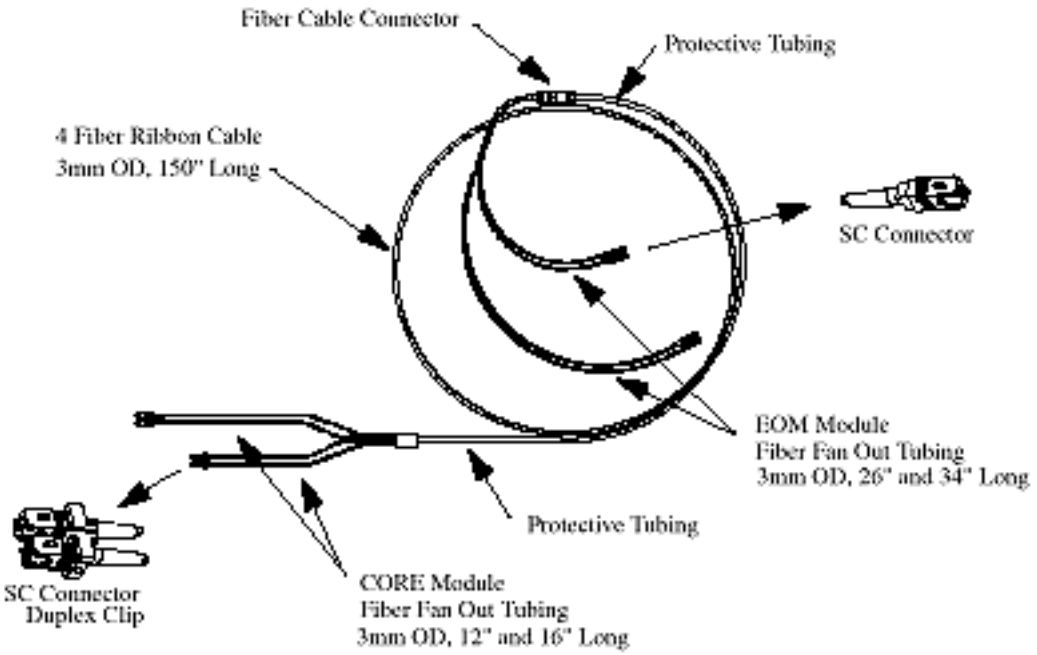

The RR accommodates up to nine FRM modules, each of which supports the RF air interface for a single CDMA sector. FRM module frequency assignments are defined on a per module basis, so a fully populated RR could support an additional three carriers/three sectors or some other combination up to nine sectors. Thus, a two cabinets indoor Metro Cell support 4 carriers/3 sector configuration. Six-sector configuration can be supported through the 2 racks.

Digital equipment architecture

The Digital Enclosure (DE/DEI) system consists of a Digital Enclosure Interface (DEI), digital shelf, fan tray, heater, heat exchangers, and a power shelf in an outdoor enclosure. The digital shelf is one large shelf sectioned off in two areas, the top shelf and the bottom shelf. There is a shared back plane that covers the top portion of the bottom shelf and the bottom portion of the top shelf. The CEM, CM, CORE and GPS modules are housed together in a digital shelf.

A graphical drawing of a digital shelf is shown in Figure 10.

Figure 10
Digital shelf (bottom) graphic

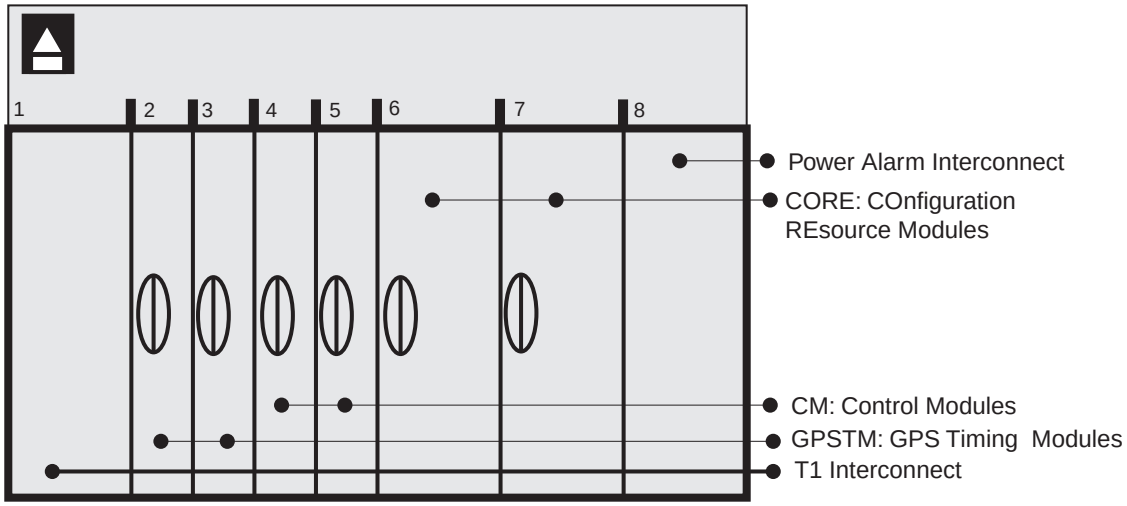

The top shelf contains the Channel Element Modules.

The Digital Equipment shelf houses the following modules:

- Channel Element Modules (CEM)

The following is a list of features provided by the channel cards (up to two in the CEM) and the module as a whole.

- face plate LEDs indicate the status of the module.
- diagnostic port to aid in software debugging and local downloads.
- parity checking of forward and reverse paths, to detect faulty ASICs or paths.
- disabling of faulty channel card, ASICs or paths.
- capture of reset failures.
- low voltage detection/reset on channel cards.
- channel card originated reset to the other Channel Card.
- low speed Inter-Integrated Circuit (IIC) bus.
- fault monitoring of IIC bus.
- fault monitoring of the other channel card in the module if present.
  - fault monitoring of registers ability to write.

A horizontal partition allows for inserting up to 12 CEMs on the top side and the CORE, Control and GPS modules on the bottom side.

All modules plug in to a common backplane

DC power is supplied via the backplane.

Cable interconnect (optical fiber) is through the CORE front module faceplates.

Environmental control

Thermal design

Outdoor cabinet

The MetroDE is intended for use in unprotected outside environments and, as such, must be able to withstand a wide range of temperature and humidity conditions. The enclosure includes a control system to manage and reduce the environmental extremes seen by the electronics.

The primary components of the thermal control system are:

- The Enhanced Controller Module within the Helios System 3500/48 power shelf
- The internal cooling unit (lower fan tray)
- The 120 Vac tubular heater assembly
- The heat exchanger
- The internal and external heat exchanger fan trays

The Enhanced Controller Module is interfaced to all of the other thermal control system equipment and, along with its primary duties within the power system, executes an environmental monitoring and control algorithm. It reads temperatures from two separate redundant temperature sensors, humidity from a relative humidity sensor, and fan failure signals from each of the separate fans. From this information and the values of various factory adjustable thermal parameters, the ECM operates the fans and heater in order to minimize temperature and humidity fluctuations within the cabinet.

The internal cooling unit sits at the very bottom of the DE cabinet and forces air up through the equipment stack to ensure that generated heat is carried away from the equipment. This tray consists of four fans that are constantly running at full speed. Since they are not controlled in any way, the only interface to the thermal control system is a single alarm wire that indicates whether any of the four fans has stopped rotating. The cooling unit also houses the humidity sensor, and the cooling unit power/fault status LEDs.

The AC heater assembly is directly above the cooling tray and provides heat to the enclosure for cold start and cold weather operation. It is under the direct control of the ECM and includes two failsafes: an overtemperature cutout to ensure that the heater cannot be enabled above 50 degrees Celsius,

and a wiring arrangement that ensures that the heater cannot be enabled if there is no power to the cooling tray fans.

The heat exchanger is located at the very top of the cabinet behind the external loop fan tray and allows heat from internal air to be transferred to external ambient air while keeping dust, salt and moisture outside of the cabinet.

The heat flow through the heat exchanger is controlled by the internal and external loop heat exchanger fan trays. The internal fan tray consists of two fans that force cabinet air past the inside surfaces of the heat exchanger, and the external fan tray consists of three fans that force external ambient air past the external surfaces. Each fan is separately controlled by the ECM. By enabling a variable number of these fans, the air flow, and hence the heat flow, through the exchanger core can be manipulated to regulate the temperature within the cabinet.

In addition to the two fans, the internal heat exchanger fan tray also contains the power switching electronics for the fans, the undertemperature fan cutouts, and the fan power/fault status LEDs.

The relative humidity within the cabinet is indirectly controlled by altering the cabinet temperature setpoint. If the humidity gets too high, the internal temperature is raised to the point where the humidity drops to acceptable levels, subject to a preset maximum.

A physical layout of the thermal system components is shown in Figure 11.

Figure 11
Outdoor Metro Cell layout of thermal control system components

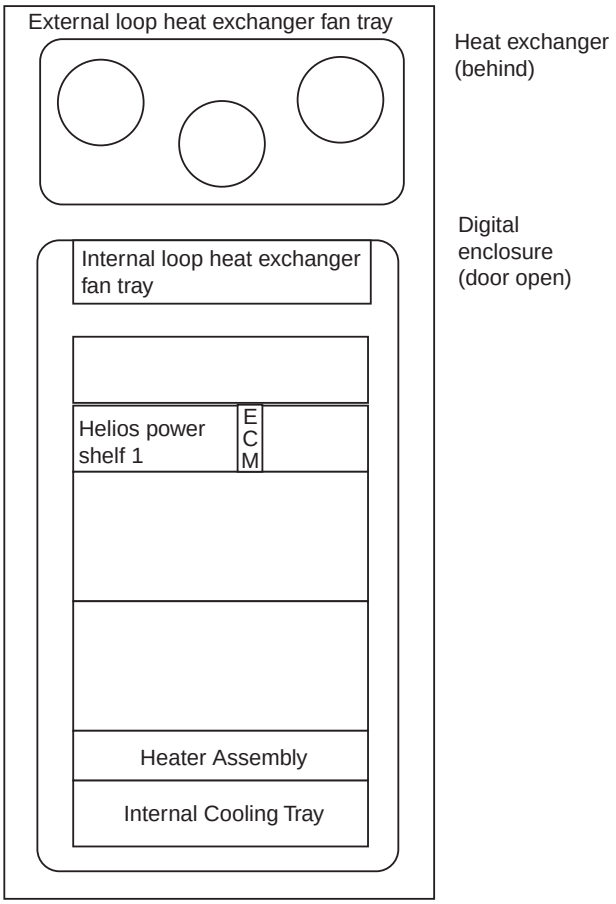

Indoor digital rack (DR) of the Metro Cell

The Power Supply System can be ac or dc. In the ac version, the top two shelves are equipped with ac to dc rectifiers. The shelf also contains breaker panel for the dc distribution to the various modules and supply feed to the batteries for recharging.

Up to 3 FRMs are housed in the DR.

Figure 12 shows an equipped DR.

Figure 12
Digital rack

Indoor cabinet thermal management

Thermal management in the Digital Rack is provided by a single cooling unit with 5 fans below the DE shelf providing bottom up cooling for the Digital Shelf, and Rectifier Shelves. Thermal management for the FRMs in the DR is done at the FRM module.

As all thermal control for FRMs is done at the FRM module level, the Radio Rack itself has no thermal requirements other than the sufficient air flow through the FRM by providing a minimum 6 inches from the rear wall.

Air flow in the Radio Rack is driven by the FRM fans. FRM fans push air over the FRM heatsink and out the rear of the rack.

The air flow through each FRM is ducted to prevent recirculation of hot air inside the RR. The Digital Rack is sealed off in the back to prevent hot air from the FRM to recirculate into the digital equipment. The fan tray contains an anti-back flow flap which stops hot air recirculation.

Figure 13
Indoor cabinet airflow

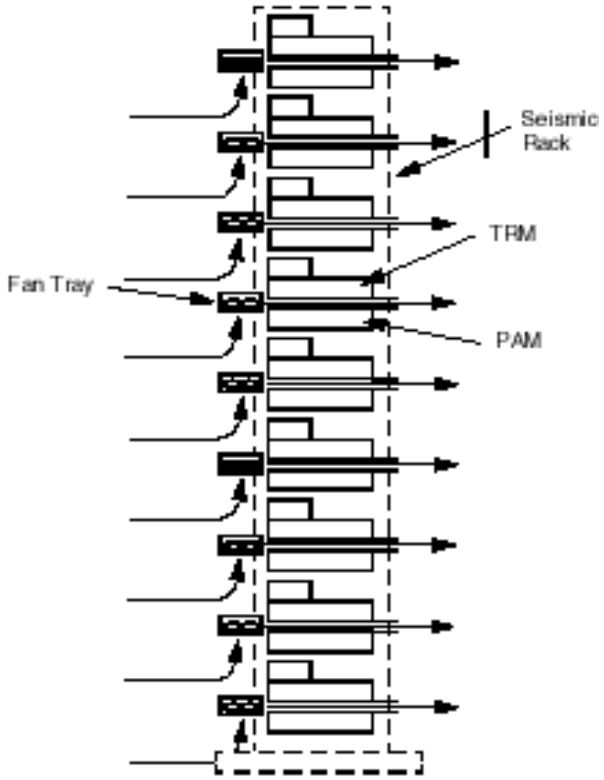

Outdoor radio enclosure (RE) physical architecture

The Radio Enclosure provides ventilation, solar and vandalism protection and structural mounting support for the FRMs. All environmental isolation is done at the Flexible Radio Module (FRM) level.

Optional hardware includes IMF filters and combiners for 800 MHz FRMs and triplexers for 1900 MHz. FRMs.

Each FRM consists of five field replaceable units (FRUs). They are the TRansceiver Module (TRM), Power Amplifier Module (PAM), Electro-Optic Module (EOM), Duplexer Preselector Module (DPM), and Fan and Alarm Indicator Module (FAM).

Additionally all external alarm interfacing and surge protection is done in the RE.

Up to 9 FRMs are housed in the RE. The FRMs consist of five Field Replaceable Units (FRUs)

- Electro-Optics Module (EOM)
  - — the EOM is located at the FRM side of the High Speed Serial interconnect.
  - — contains two optical transceivers for redundancy
  - — the light source is LED at approximately 1350 nm. No laser eye protection is required.
- Transmit Receive Module (TRM)
  - — performs modulation and de-modulation via “channelizer” ASICs.
  - — performs clock recovery and synthenization.
  - — performs Digital to Analog and Analog to Digital conversion.
  - — performs up and down frequency conversion.
  - — performs power control and power detection.
  - — allows for limited system overlay ability.
  - — external alarm routing.
- Power Amplifier Module (PAM)
  - — provides RF Power Amplification
  - — interface for DC power from the Digital Enclosure
  - — provides DC Distribution to other FRM modules.
- Duplexer (DPM) with or without preselector
  - — two DPMs with or without preselector.

  - — provides RF signal filtering.
  - — provides threshold extension / receive signal amplification.
  - — provides Interface to TRM and from PAM.
- Fan and Alarm Module (FAM)
  - — provides vectored constant velocity airflow for ambient PAM cooling.
  - — provides fault indications for all five FRUs.

The RE is shown in Figure 14.

Figure 14
Radio enclosure

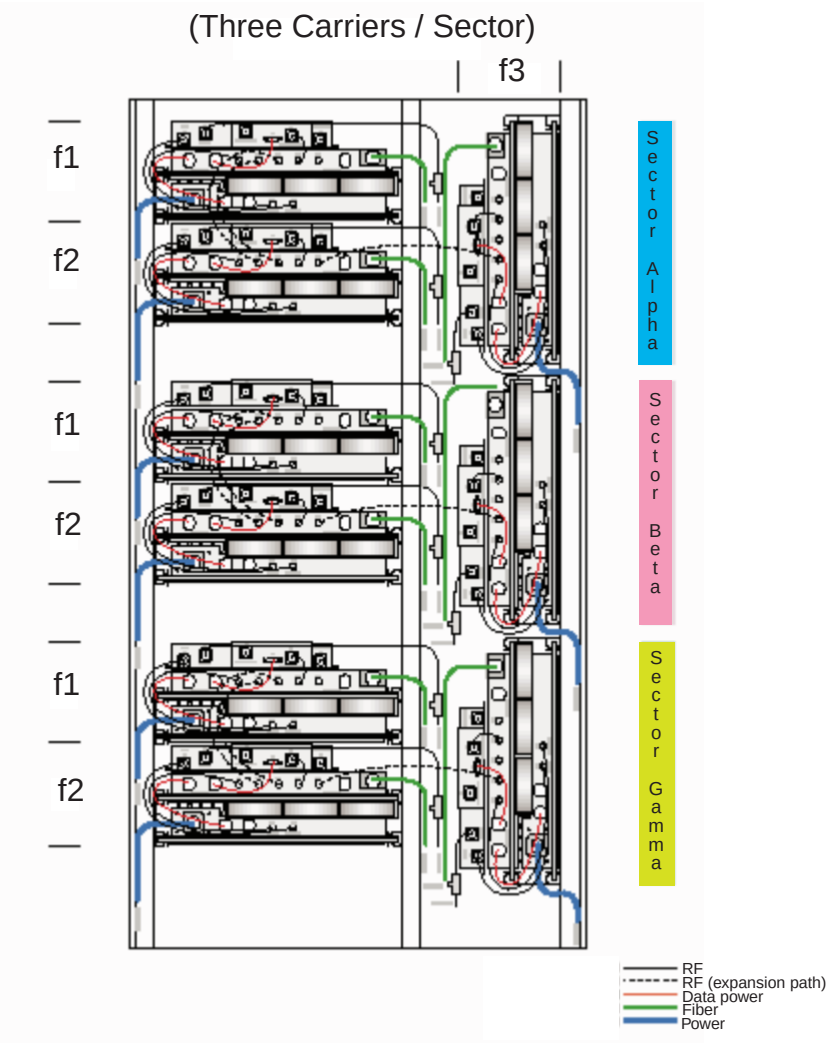

Module interrelationships

Figure 15 shows the relationship between the different modules making up the Metro Cell. This depicts a three carrier configuration. Up to 12 CEMs can be provisioned. Each CEM may have 24 or 48 channel elements.

The CORE module provides the interface between the CEM and the FRMs. Essentially, the CORE is responsible for the switching, routing, addition and multiplexing of baseband data signals between the CEMs and the FRMs.

The GPS module is the source of timing and frequency reference. The GPS directly provides the reference signals to the CORE and CM.

Figure 15
Module relationships

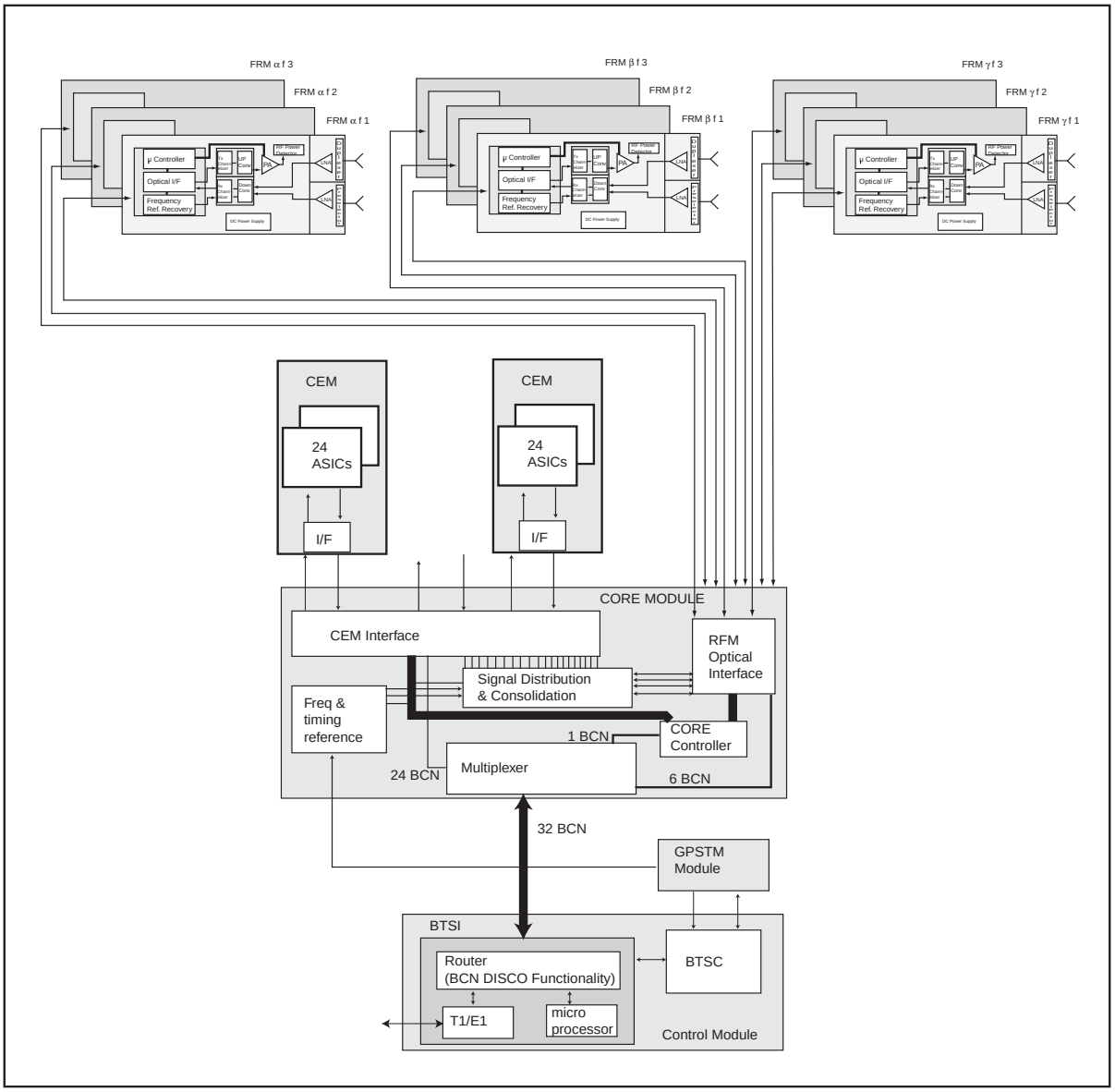

Subsystem description

Outdoor Metro Cell power systems

DEI physical layout

The location of the major components in the DEI is shown in Figure 16. Many of the PP&G cables from the DE and Helios 3500/48 terminate in the DEI. The connections to the Helios shelf pass through the access hole in the back of the DEI.

Figure 16
Layout of components in DEI

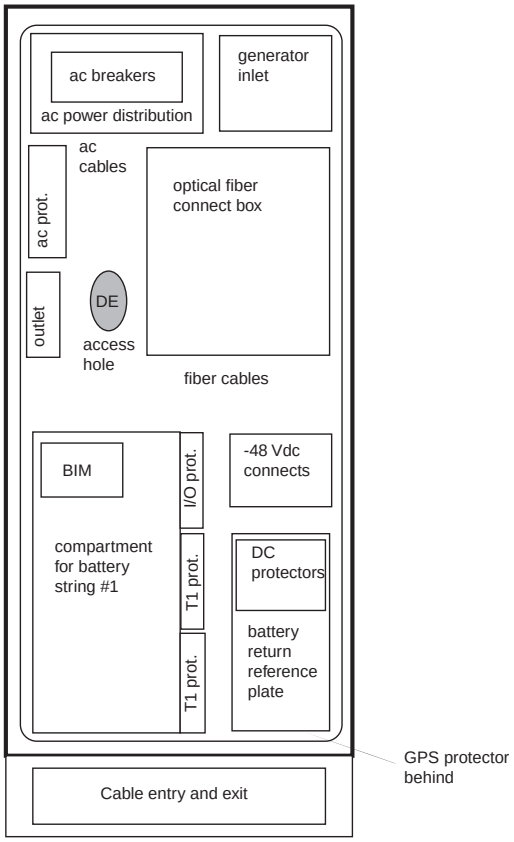

The following external interfaces and terminations are provided in the DEI:

- Utility 208/240 Vac power entry: 4-wire cable to ac panel (L1, L2, N & PE).
- AC generator: recessed 4-pin power receptacle, with access door.
- AC power to cabinet heaters: ac cables to DE and EBC.
- DC outputs to FRMs: Qty 9, 2-wire plus shield terminals, two-hole crimp lugs.
- T1 backhaul lines: Qty 6, screw-down terminals at protection modules.
- GPS Antenna: Qty 2, N-type coax connector on protection unit.
- DC power bus: -48V power cables to the EBC batteries.
- Battery monitor (BIM): RS485 serial link from EBC (if used).
- External inputs/outputs: Qty 12, alarm/control lines at protection module (if needed).
- Ground (to MetroRE): two-hole lug termination on BRR plate.

Backhaul interface

The Metro Cell terminates up to 6 T1/E1 ports and is software programmable in order to select between the T1 or E1 protocols. It supports B8ZS, AMI line coding for T1. HDB3 line coding for E1, SF and ESF framing is supported. The Metro Cell can be daisy chained to other BTSs up to a total of 3 BTSs in the chain. Each BTS must be assigned at least 4 contiguous DSOs over the backhaul link. The total T1/E1 connections supported by a Metro Cell is 6 which includes connections coming into the Metro Cell through two cables at the DEI. These cables can have any number of T1s/fractional maximum of 3 T1s/fractional T1s going out to the other BTS.

Surge protection

All external electrical interfaces are protected against surges and transients from lightening strikes. This includes all interfaces in the DEI and the power and RF connections at the FRMs.

AC power entry and distribution

The ac power system has the following components:

- service entrance for permanent connection to the utility ac power source.
- facility for connecting an external ac generator for emergency backup use, with a positive interlock to prevent both utility and generator being connected at the same time.
- indicator display to show that ac power is available and from which source.

- overcurrent protection (circuit breakers) and lightning surge arrestors at the ac power entry.
- circuit breakers in various sizes to service and protect the internal ac load circuits.
- the Metro Cell ac loads include the following: ac-dc rectifiers
- cabinet heaters
- 120Vac, 15 Amp duplex convenience outlet.

A power panel is shown in Figure 17.

Figure 17
AC circuit breaker panel box in the DEI

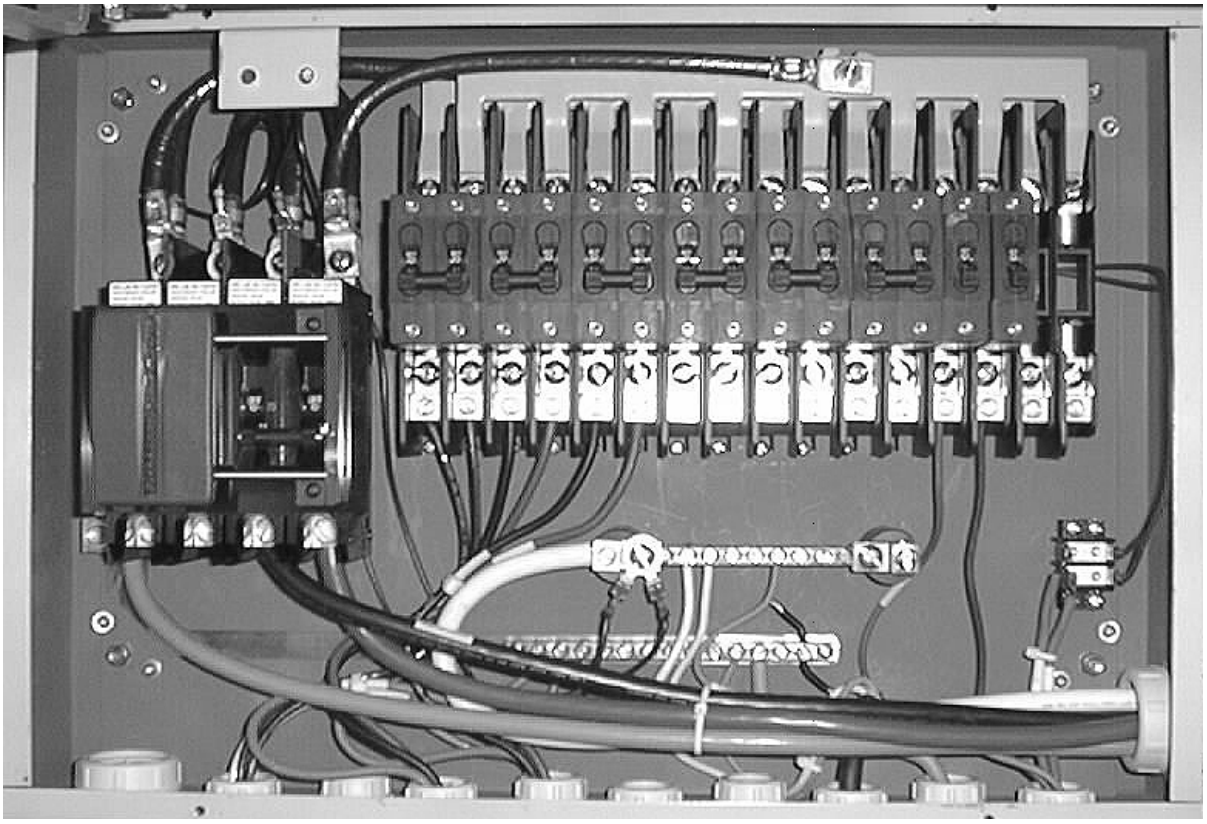

DC power and distribution

The Metro Cell dc Power System comprises the following functions:

- AC-DC power conversion via parallel rectifier units.
- charge/discharge management for the backup batteries.
- DC power distribution for the DC loads (internal and external).

- overcurrent protection for DC load circuits (breakers).
- filtering of power interfaces against EMI and transients.
- monitoring and alarms for the power system.

Power, protection and grounding architecture

The Metro Cell is powered by a combined ac and -48 Vdc power system. Figure 18 shows a simplified block diagram of the major items comprising the outdoor Metro Cell power, protection and grounding architecture. The principal ac power, dc power and grounding interfaces are also identified.

AC power is provided either through the utility connection or by an external generator. DC power is derived from the ac by rectifiers and stored in battery strings. Circuit breakers provide over current protection and fault isolation for both ac and dc circuits. The ac powers the cabinet heaters. The dc powers the environmental control units for the system. DC to dc converters provide electronic loads with isolated and regulated dc power at the required voltages. Signal and power cables are protected against transients and surges at every external interface. All cabinets, circuit modules and cable shields are properly grounded for safety. Power system operation is monitored and controlled internally and external alarms are set in the event of specified faults or failure events.

Batteries are located in the DEI or in a separate, expansion cabinet, depending on the configuration chosen. Each battery location is designed to facilitate the safe installation, inspection, or removal of the batteries in a minimum amount of time by one person. The terminals of each battery incorporate a protective cover to prevent accidental contact by maintenance personnel.

The battery enclosures have louvers to vent any gasses produced by the batteries to the outside air, such that buildup of a flammable or explosive hydrogen gas mixture cannot occur. Battery gasses are not able to enter the main system enclosure.

Backup batteries and sensors

The backup batteries used in the Metro Cell are sealed lead-acid, 12 Vdc (nominal) batteries intended for long life, maintenance free, stationary, UPS type applications. Four series batteries comprise one -48Vdc string. Additional parallel strings in an optional external battery cabinet may be added for extended backup time .

Under normal operating conditions, the batteries are float charged to 100% capacity at a constant voltage by the ac-dc rectifiers. The ECC (Enhanced Controller Card) located in the rectifier shelf, controls the float voltage, monitors battery charging a discharging, monitors the individual battery string temperature and adjusts the load voltage so that the batteries can be fully charged without danger of excessive gassing. Thermistor temperature

sensing on the terminals of each battery string is provided to interface with the ECC.

The ECC also monitors the midpoint voltage of each battery string to determine if the batteries in that string are charging equally and whether any battery cells are weak. The ECC also maintains a record of recent charging/ discharging events which can be accessed by the serial data link as a battery health report to assess the health of each battery string and project their remaining capacity and life.

Figure 18
Power protection and grounding block diagram

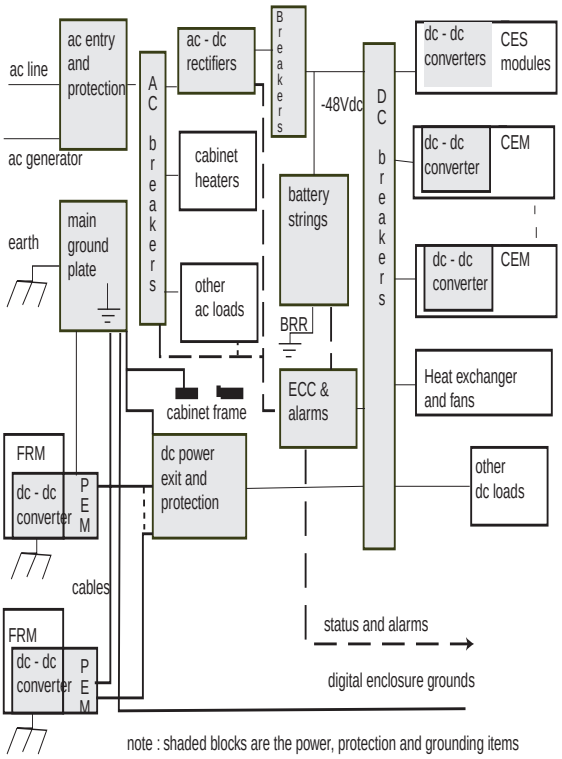

The Digital Enclosure Interface (DEI) on one side of the main cabinet is used for all external interfaces.

The dc power subsystem includes the new Helios Mini 48 power system. These include rectifier modules, battery management and alarm functions and a dc distribution/breaker panel in one small shelf. A second rectifier shelf is provisionable for adding extra power capacity.

With these components, the power system architecture is modular and quite flexible and can be adapted to multiple carriers and a wide range of electronic module (FRM and CEM) configurations.

Figure 19
Metro Cell power and grounding interconnections

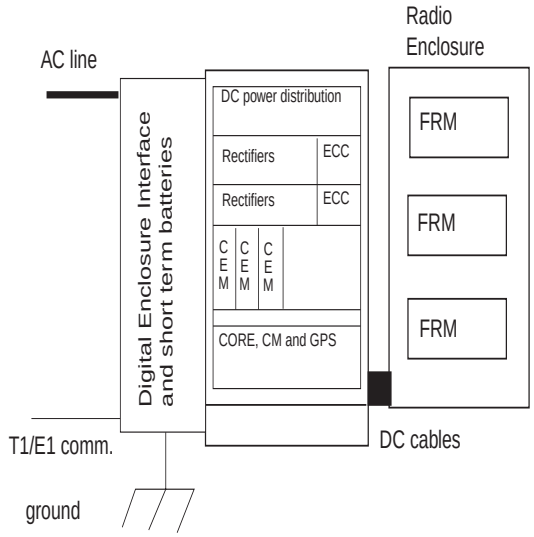

Indoor Metro Cell power systems

The Indoor Metro Cell power system is similar to the outdoor version. There are three options for powering the Indoor Metro Cell. These options are:

- AC Mains Operation
- -48Vdc Operation
- +24Vdc Operation

AC power Input

In the AC input version, the Metro Cell will operate in similar fashion as described above for the outdoor Metro Cell. AC breakering for the input must be provided by the customer.

The external AC power enters the Metro Cell through the bulkhead at the top of the digital rack. The AC power is provided by 240Vac, 3 conductor (L1, L2 and ground) power feeds.

Figure 20 shows the AC power architecture.

Figure 20
Indoor AC power architecture

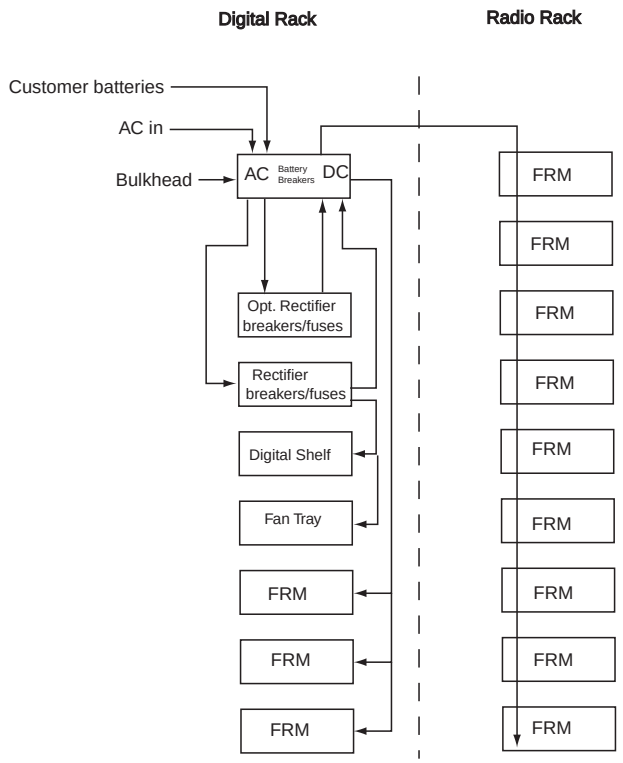

Figure 21 shows the AC System bulkhead.

Figure 21
AC system bulkhead

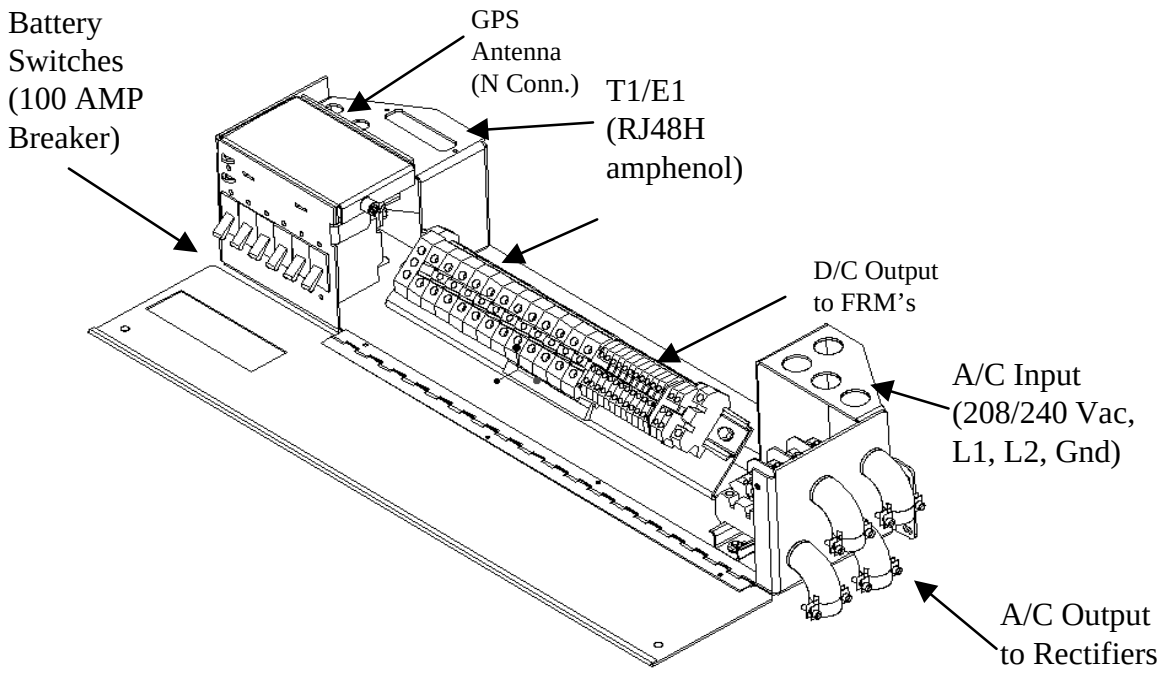

Figure 22 shows the A/C Indoor Metro Cell Packaging; indicating the AC System bulkhead and the rectifier shelves. It is to be noted that a maximum of 2 rectifier shelves can be provided; with a total of 16 rectifiers.

Figure 22
Indoor ac Metro Cell packaging

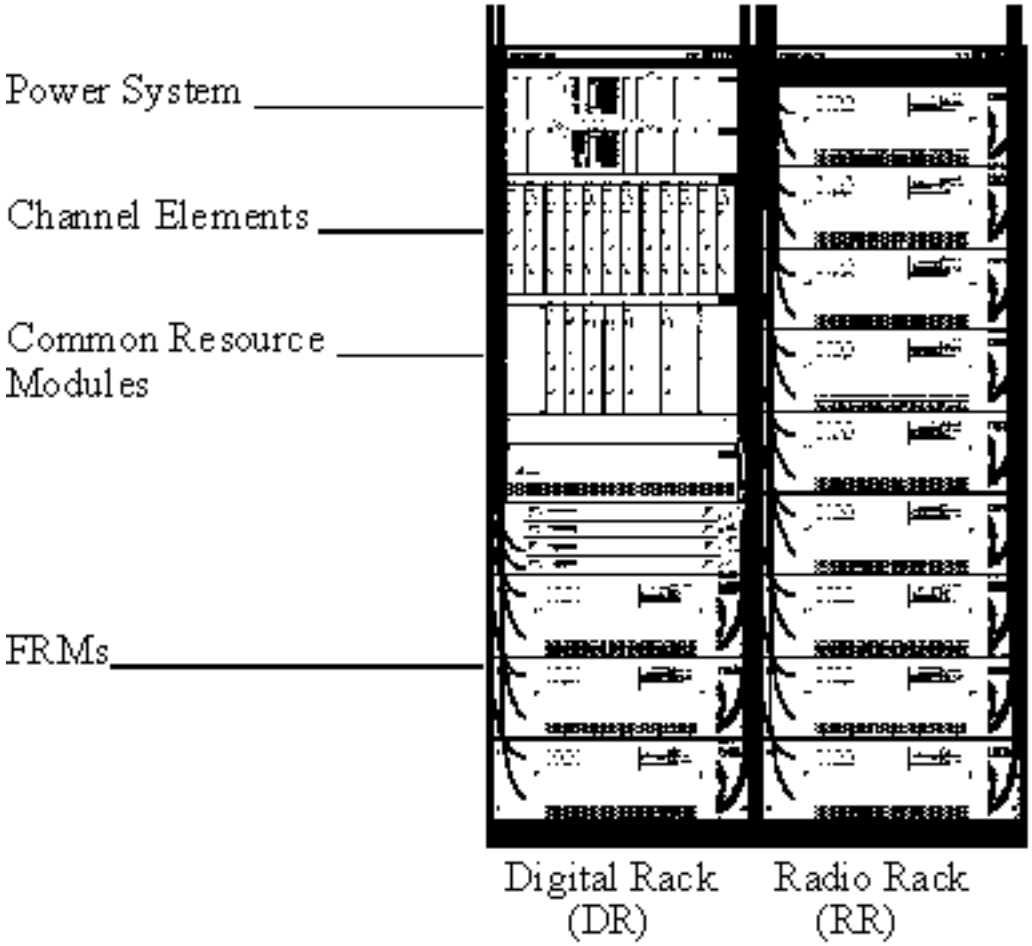

The AC to DC rectifiers are located in the rectifier shelf at the top of the DR. The rectifier shelf is a Helios 3500AC Power Shelf. Each shelf can accommodate 8 rectifiers, in a N+1 configuration. The rectifier shelf also contains an ECM and breakers as described above in the outdoor configuration.

DC power input

The Metro Cell is powered by -48Vdc input supplied by the customer. The DC feed enters at the bulkhead in the DR. The DC breaker panel provides the DC distribution to the digital shelf, fans and the FRMs. The FRMs in the RR are fed through the bulkhead as supplied by the breakers in the DC breaker panel.

DC power distribution (FRMs)

The indoor Metro Cell provides for the -48Vdc supply required by the FRMs. The DR bulkhead has 12 Vdc FRM power outputs connection. Up to six

breakers are provided in the dc breaker panel. Each breakered FRM power output is split into two FRM power feeds in the DR bulkhead.

Power is supplied to the digital shelf backplane via four separate feeds. The -48 Vdc is kept separated on the digital shelf backplane and supplies the modules (CEM, CORE, CM and GPSTM) via hot pluggable connectors on the backplane.

Figure 23 shows a block diagram of the Indoor Metro Cell dc power architecture.

Figure 23
Indoor dc power architecture

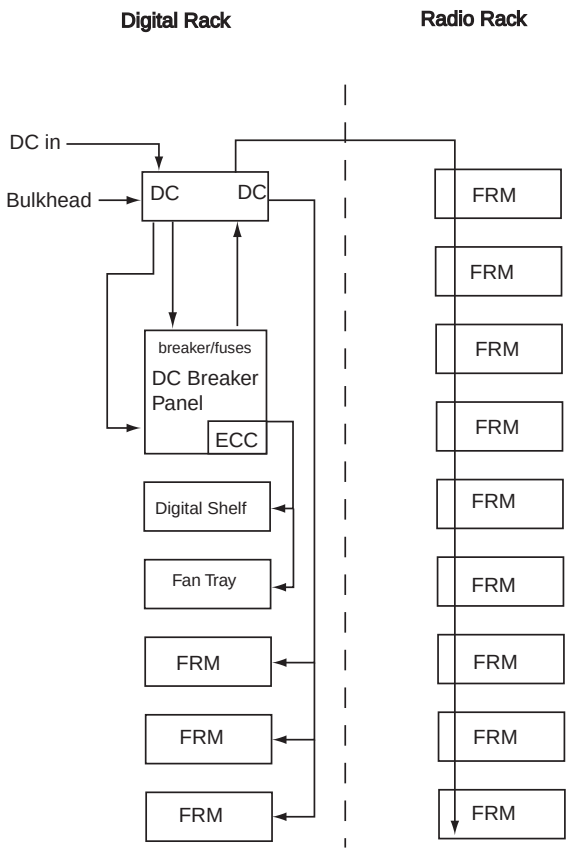

The indoor system dc bulkhead is shown in Figure 24.

Figure 24
Indoor system dc bulkhead

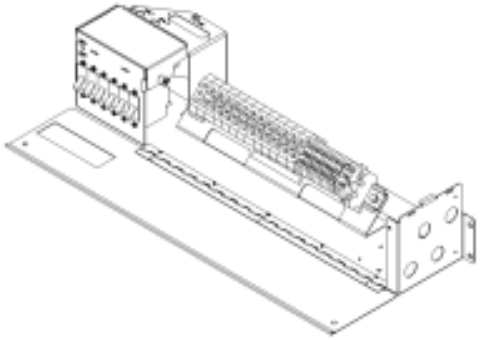

Indoor and outdoor Metro Cell distribution module

The Mini-48 system has up to eight 500W rectifier plugs in modules in a single shelf, with their own control module. Each rectifier converts the AC power to filtered -48Vdc (nominal) dc power for the Metro Cell battery and loads. These modules optionally operate in an N+1 redundancy mode to supply continuous loads up to 3500 watts. The rectifier modules perform the following functions :

- convert ac power into the nominal -48Vdc voltage level for the Metro Cell.
- provide the necessary charging and float voltage requirements for the batteries.
- prevent EMI emissions on both the ac and dc side.
- provide parallel operation with current sharing.
- provide N+1 optional operation and hot plug/replace capability.
- provide front panel operation status indicators.
- are fully connectorized for quick service via unit replacement in the field.

The rectifier shelf also houses the the Enhanced Controller Module (ECM). The ECM implements the dc power system and monitoring functions. It also performs the following functions:

- controls the current sharing among the rectifier modules.
- monitors rectifier performance and report it to the Metro Cell CM on demand.
- generates minor and major alarms for dc power system failures.

A graphic of a rectifier shelf is shown in Figure 25, a photograph of a closed rectifier shelf is shown in Figure 26 and a photograph of an open rectifier shelf is shown in Figure 27.

Figure 25
Power shelf (graphic)

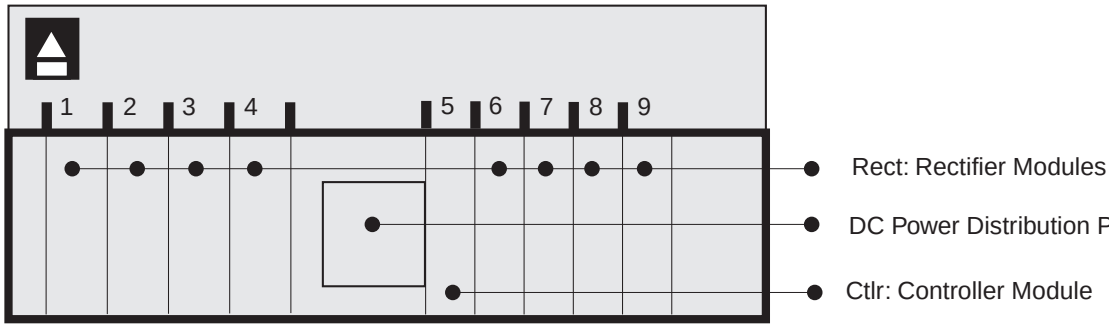

Figure 26
Rectifier shelf - cover closed

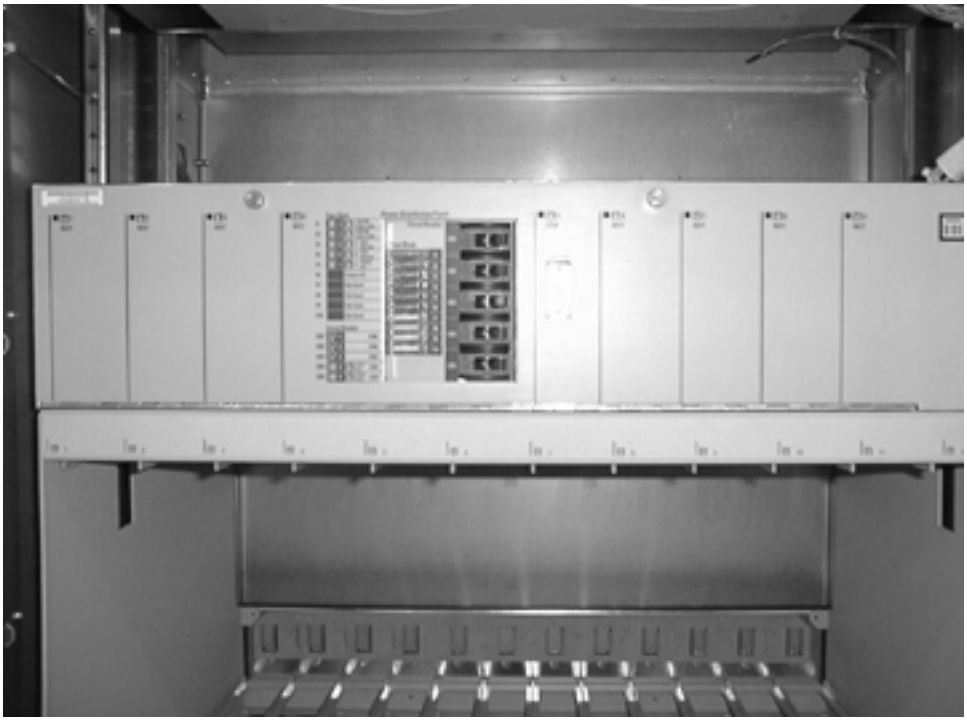

An open rectifier shelf is shown in Figure 27.

Figure 27
Open rectifier shelf

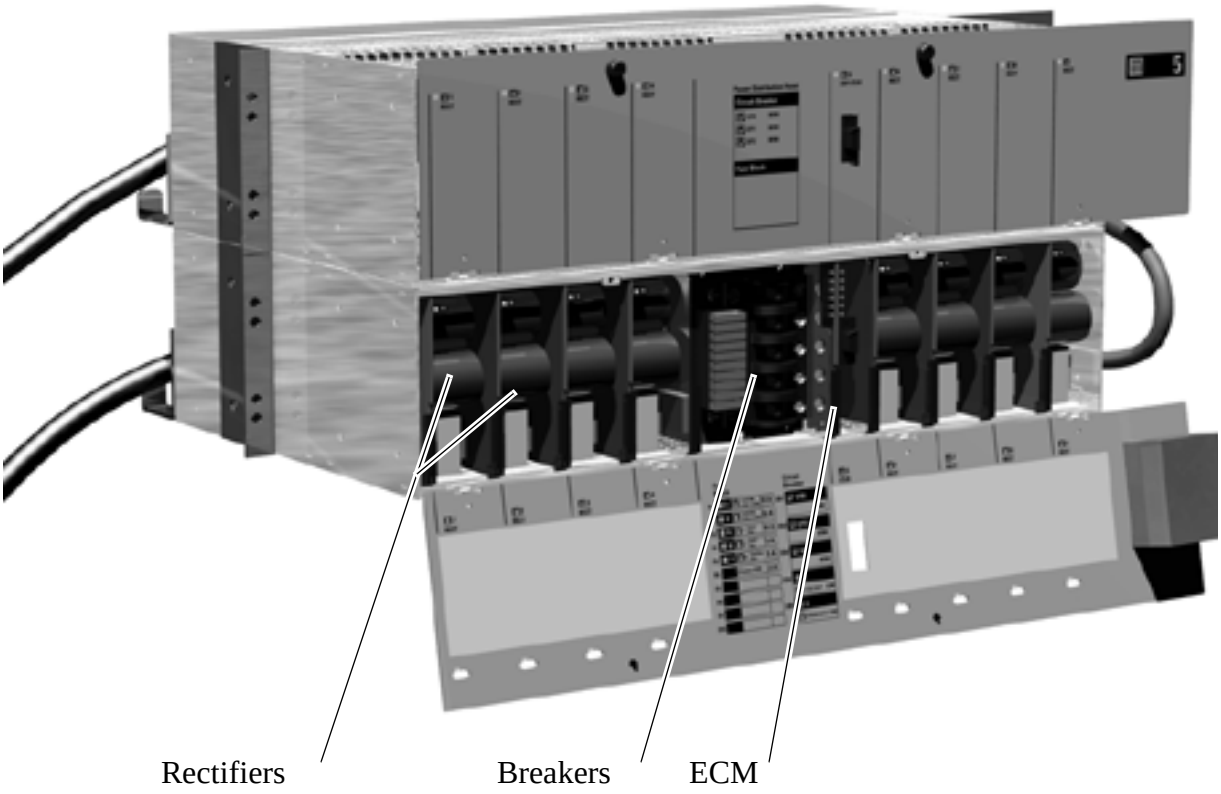

The breaker sticker on the rectifier shelf is shown in Figure 28.

Figure 28
Breaker sticker

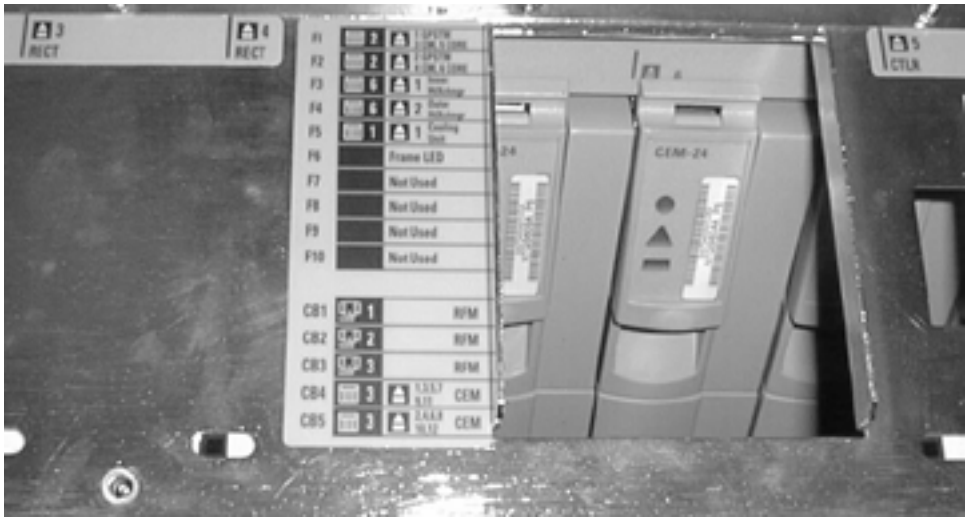

Battery management

The enhanced controller module (ECM) provides the control and monitoring functions for the dc power subsystem. One of its principal responsibilities is to manage the charging and discharging of the backup batteries. When ac power is restored, following an outage, any excess current available from the rectifiers is applied to recharge the batteries. These are charged up to a controlled float voltage, and once recharged are maintained at that level. The float voltage is adjusted for battery temperature.

The ECM also incorporates the following features for managing the batteries:

- temperature compensation of the float voltage for the selected battery type.
- Low Voltage Disconnect (LVD) to shut off the loads when the batteries are discharged below 42 Vdc. This protects the batteries from deep discharge and permanent damage.
- Over Voltage Protection (OVP): rectifier output voltage does not exceed the battery manufacturer's recommendation for continuous float charging (around 56V) to prevent excessive battery gassing which could shorten the battery life and represent a safety hazard.
- Over Temperature Shutdown: shutdown the rectifiers at high battery temperature conditions, with automatic restart upon falling below this temperature. Shut down temperature is selectable to comply with the battery specifications.

- Battery Health Monitor: monitor the battery strings and provide charging history, performance data, life data, etc. Report health status and any weak/shorted cells via a serial data link to the Controller Module.

Power distribution

This Mini-48 function includes the circuit breakers and terminations to distribute the -48Vdc power to the batteries and the dc loads. The circuit breakers used for dc distribution are magnetic-operation, UL listed types and incorporate provisions for each dc breaker to report the presence of a tripped condition to the controller. Power wiring in each circuit is of sufficient gauge to conduct the rated current of the circuit breaker for that circuit with minimal voltage drop within or between the BTS cabinets.

Disconnect facilities are provided to disconnect (in conjunction with the Enhanced Controller Module) the batteries and the rectifiers from the loads under the following conditions:

- dc voltage falls below 42.0 volts.
- all dc system loads are supplied from the nominal -48 Vdc battery rail. This provides no break dc power to the following loads:
- the RF and digital equipment.
- the GPS receive.
- the FRMs (external to the electronics cabinet, whether remote or local).
- the battery monitoring card (Enhanced Controller Module) subsystem.
- the environmental control fans.

Figure 29
Power distribution block diagram

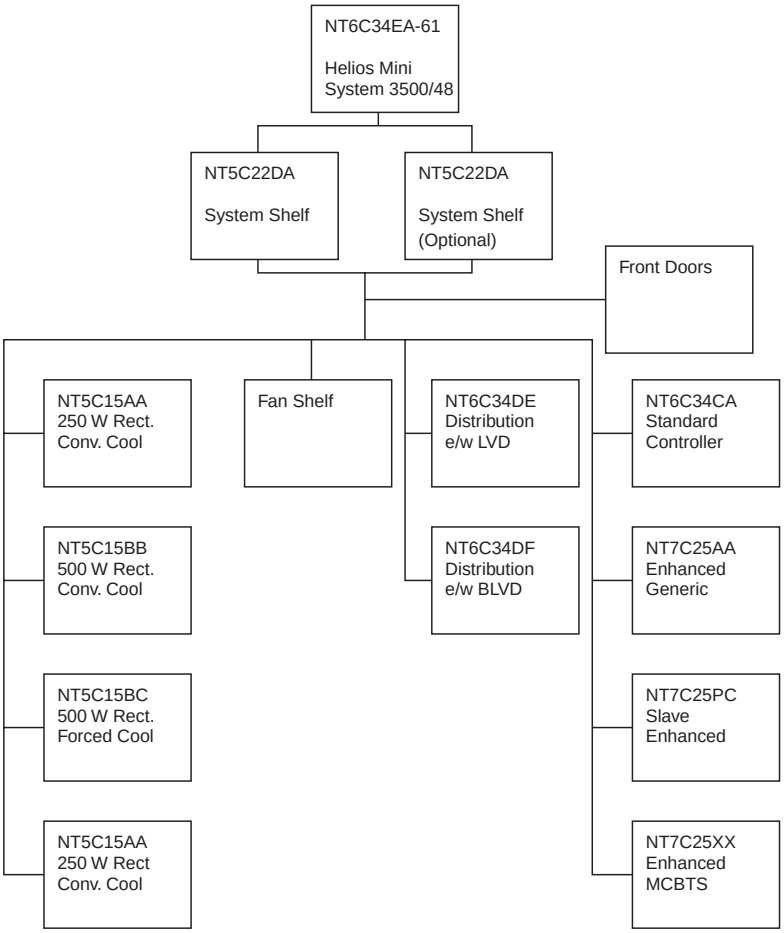

Grounding

For personnel safety and correct functioning of protection devices, proper grounding (both internal and external) of the Metro Cell system is essential. The main grounding plate in the interface module provides a central bonding point for all system grounds. This is connected to a good quality external site ground, and ties all the internal grounds and references together electrically. The ground plate also provides termination for external ac and RFM power cable grounds and coaxial cable shields. The cabinet frame and all conductive external surfaces are also grounded to the same plate.

The secondary side (Logic Return) of all dc-dc converters in the modules shall be grounded to the module frame or chassis which, when installed, shall be bonded to the frame of the cabinet. In systems with multiple cabinets, each cabinet frame ground are connected separately to the main ground plate in the DEI by means of a copper cable.

Battery backup

A backup battery is used to maintain system power during ac power outages. The Metro Cell is optionally provisioned with one or more strings of 12Vdc (nominal) lead acid batteries to provide backup energy storage.

A battery storage frame is shown in Figure 30.

Figure 30
Battery storage frame

CEM principle functions

The CEM resides in the Metro Cell Digital Shelf. The primary responsibility of the module is to process calls within the Metro Cell. To accomplish this function, it interfaces with the CORE module in order to receive digital samples and transmit baseband digital data. The CEM also interfaces with the CORE in order to send and receive traffic and control information. It also interfaces with the system to send and receive control information associated with call setup, tear down, and hand-off.

Each Channel Element) on a Channel Card is configured via software to perform a variety of tasks, including:

- traffic Channel.
- pilot Channel.
- sync Channel.
- paging Channel.
- access Channel.
- OCNS (Orthogonal Channel Noise Simulator).
- some combinations of overhead channels.

The ‘Built In Testing’ (BIT) function is used to perform built-in tests on Channel Element Hardware, including:

- channel card/Processor interface tests.
- modulator section signature analysis tests.
- DRAM integrity tests.
- JTAG boundary scan.

The CEM can contain one or two channel cards that are connected to an interconnect board. Each channel card in the CEM can function independently of the other card in the module. The module is capable of carrying up to 48 traffic and control channels. The actual number of channels and their composition is determined by software.

In a module equipped with two channel cards, one channel card is capable of powering the interconnect board and operating on its own if the other fails. The redundancy in this type of configuration is viewed as a “loss of capacity” strategy. As a module, the two channel cards monitor each other over an Inter-Integrated Circuit (IIC) bus; and, in the event of failure on one of the channel cards, the other one assumes control of the Interconnect board and informs the system that it has done so.

The module is built in an EMI shielded container which does not interact with the other CEMs in the shelf except through software. The Interconnect board inside the module interfaces to the CORE module via a 639 Mb/s serial link.

Module LEDs indicate the status of the module as a whole (refer to Metro Cell Maintenance and Troubleshooting Guide, 411-2133-550).The LEDs can indicate that the module is faulty or that one of the boards is still in working order and can carry on servicing users. Module software informs the system of the status of the internals of the module by monitoring status signal throughout the channel cards.

The CEM contains 24 or 48 Channel Elements (CE) on one or two channel cards, CEM Interface circuitry, serial/parallel converters and a power supply. The CEM can be connected to two separate COREs as part of the optional redundancy strategy.

There is a maximum of 4 X 48 CEMs per sector.

A graphic of a Digital Equipment Shelf showing the CEMs is shown in Figure 31.

Figure 31
Digital equipment shelf (top) graphic

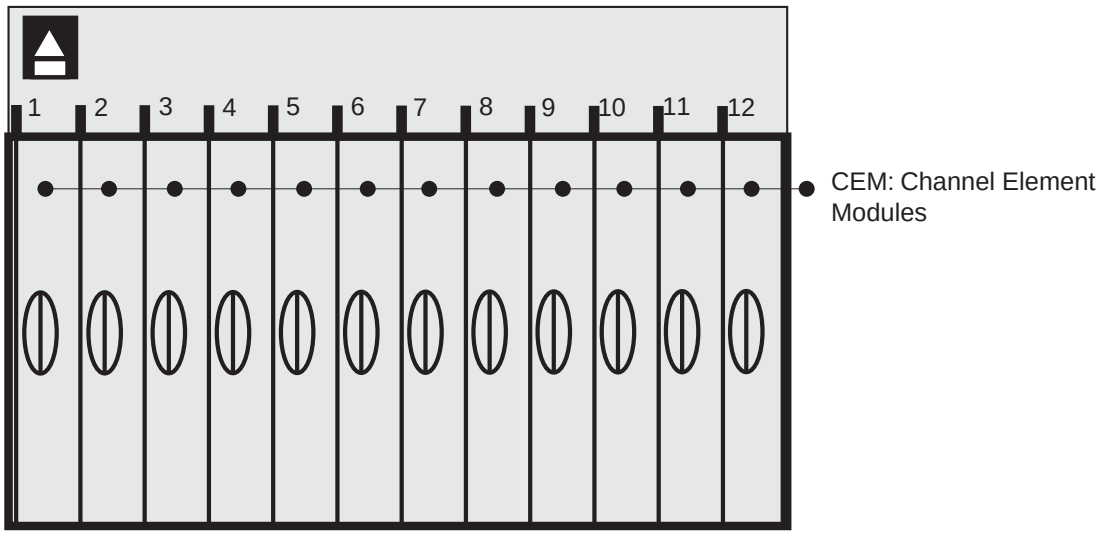

Power and the Tx/Rx baseband are distributed on a simple shielded backplane.A fully populated CEM shelf is shown in Figure 32.

Figure 32
CEM shelf

Figure 33
CEM diagram

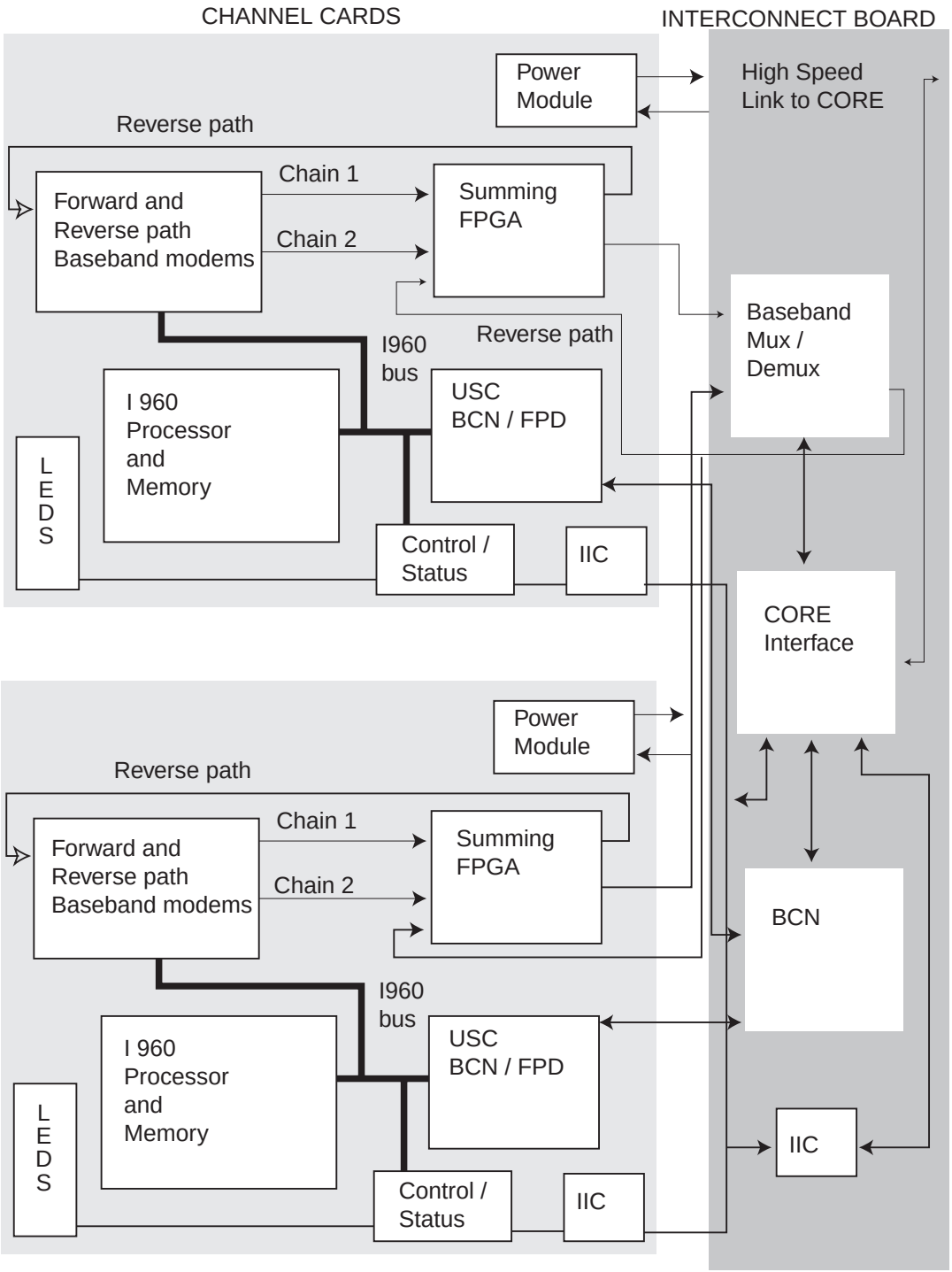

CEM Interconnect board (IB)

The CEM IB provides the interface between the two channel cards and the CEM and CORE Modules.

On the Forward Path the IB sums the two Channel Cards CDMA forward link Baseband and multiplexes it with the reverse link BCN traffic from the Channel cards.

On the Reverse Path the IB demultiplexes the 650 Mbps serial data from the CORE and splits it into CDMA forward link BCN data and CDMA reverse link baseband data.

CEM dc voltages

Each Channel Card Module is powered from the -48 Vdc power rail accessible along the back of the CEM shelf. Each CEM has an internal Power Supply to convert this to the regulated supply voltage(s) needed by the channel cards and other circuitry. The channel cards require a +5 Vdc supply. Each CEM has two Channel Cards and Interface cards, for a total power of less than 100W at -48Vdc.

Timing and frequency systems

Global positioning system timing module (GPSTM)

The GPSTM is an oscillator which provides outputs of 8fc (9.8304 MHz), 1/2 Hz (even second), 10 MHz and serial data. The primary clock signals are distributed directly to the CM and CORE over the back plane. The CORE distributes the clock signals to the FRMs and CEMs over the high speed serial link.

The GPSTM also supplies the system with the time of day obtained though a serial interface to the CM.

An internal oscillator stabilizes / tracks to GPS system time. The receive frequency is 1575.42 MHz.The GPSTM is a GPS disciplined oscillator which provides outputs of even_second, 10 MHz, 9.8304 MHz and serial data

The GPSTM also provides 10 MHz, 8fc and 1/2 Hz out for test equipment synchronization. Signals are available at the front of the card via a push on connector.

A 24 hour holdover after a 24 hour training period is provided as well.

The CORE and CM monitor the quality of the primary clock signals and report any deviations from normal operation.

Secondary clock sources PLLs in the CEMs and FRMs re-generate the clocks as required in these modules for local use. The PLLs are synchronized to the primary clocks distributed on the high speed serial links.

The timing distribution is shown in Figure 34.

Figure 34
Timing distribution

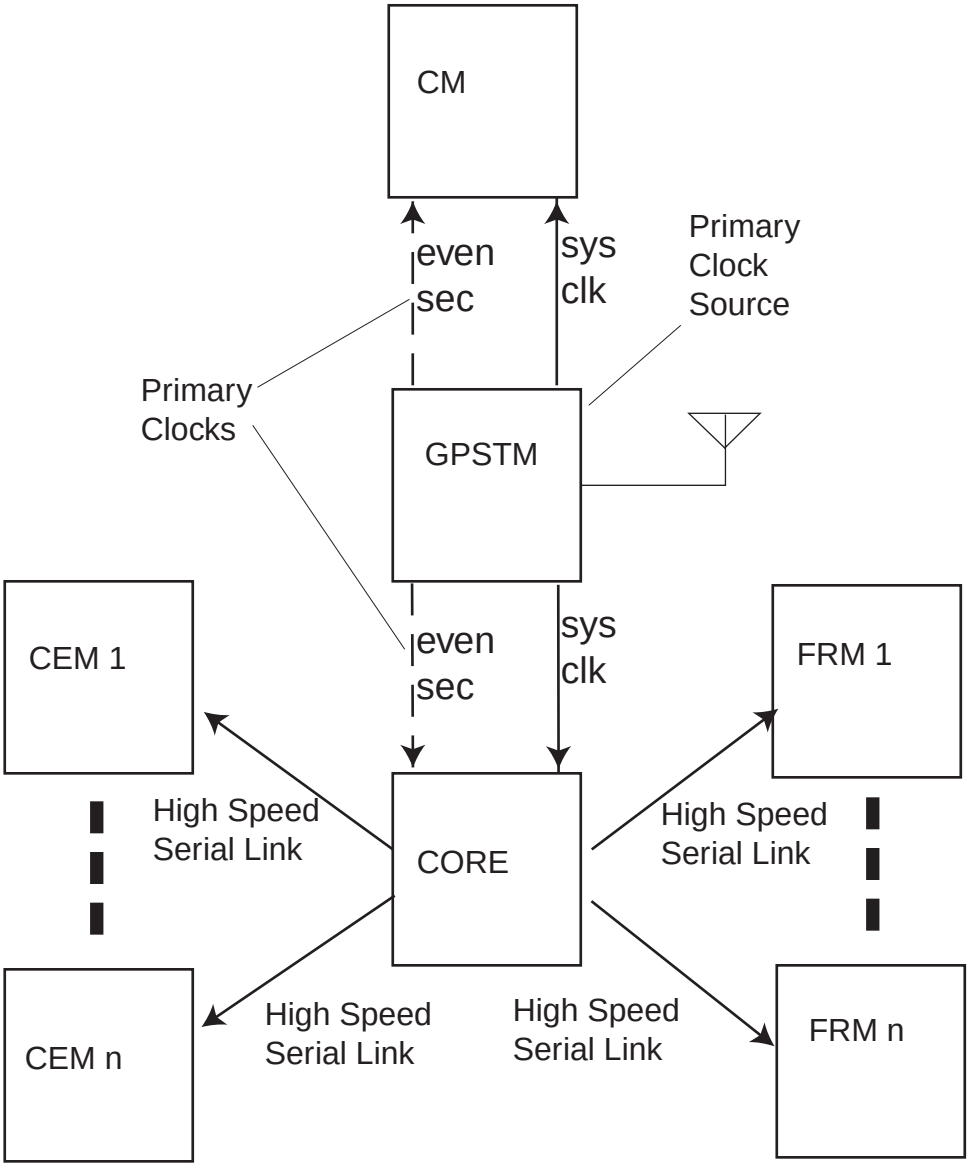

Antennas

Gps antennas

Two type N connections are supplied in the DEI for the GPS antennas (one per GPS receiver). Provision is made for grounding the GPS antenna cable to the ground plate within the DEI.

The GPS card is shown in Figure 35 with a control module (CM) card.

Figure 35
Global positioning system timing module (GPSTM)

Control Module (CM)

The Control module consists of the Base Transceiver Station Controller BTSC card and Base Transceiver Interface (BTSI) cards. The CM terminates 6 backhaul T1 links which provide drop and insert, and daisy chaining capability.

The Controller Module (CM) provides BTS control, the backhaul interface, and the internal BCN network switching and routing.

The CM controls the GPS Module using an asynchronous RS-422 serial port. One CM can control up to 2 GPS modules .

The BTSI utilizes an embedded processor to control/monitor the T1/E1 ports, to emulate the CSU interface, and to perform card level maintenance and diagnostics. In addition the BTSI provides the BCN interface to both the BTSC and the CORE modules.

Control Module BTSC

The BTSC is a new design based upon the Jumbo Universal Controller Card and provides control and maintenance in the Metro Cell.

The CM BTSC conveys call processing and OA&M messages to the BTSI via a BCN link. It also receives and controls frequency reference and timing information (for the Metro Cell) from the GPS Module.

Control Module BTSI

The BTSI terminates 6 T1 / E1 ports and terminates a BCN link transferring call processing and OAandM messaging to and from the BTSC card. It also terminates a BCN interface to the BTSI card in the redundant CM. This interface allows messaging and maintenance to be passed between the BSC and an inactive BTSC through the BTSI cards.

The Control Module BTSI provides the packet interface to the BTSC in both the same and redundant CM Modules, the BTSI in the redundant, and the CEMs and FRMs via the COREs.

Card level maintenance and diagnostics are performed.

CDMA traffic systems

CORE

The CORE Module provides the interface between the Control Module, Channel Element Modules and Flexable Radio modules receiving timing reference signals from the GPSTM . It accommodates six FRMs and performs baseband routing, BCN packet Mux and Demux functions, and timing reference distribution. Essentially, the CORE performs the routing, addition, and multiplexing of signals between the CEMs and FRMs.

The CORE module can be flexibly programmed to support many different system configurations.

The CORE consists of:

- performs some of the funcitons of the Legacy Tranceiver Controller Card.
- generates 52fc and 32fc clocking for the Metro Cell
- distributes TDM link data to applicable Channel Card (CEM)
- interface for all High Speed Serial Protocol Control (HSSPC) links.
- performs CEM summing.
- routing of CEM data to applicable frequency and sector.
- routing of FRM frequency and sector data to CEM.
- optical transceiver module is the physical entity of the CORE which handles the electrical to optical conversion and the optical communication with the FRMs.

- for each CORE Module there is one optical block which connects to 12 fibres that provide the multi-channel bi-directional data communication required to connect to 6 FRMs.
- the optical block consists of a serial transceiver, optical receiver, and optical transmitter.

A CORE module is shown in Figure 36.

Figure 36
NTGS30AA CORE module and CORE module with open faceplate

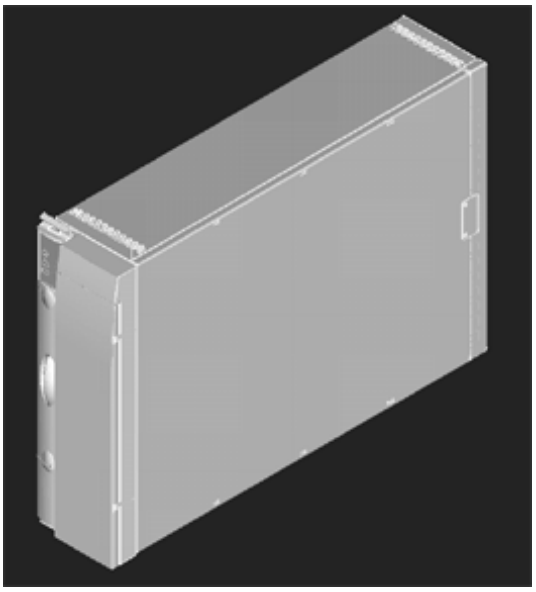

The block diagram of a CORE is shown in Figure 37.

Figure 37
CORE block diagram

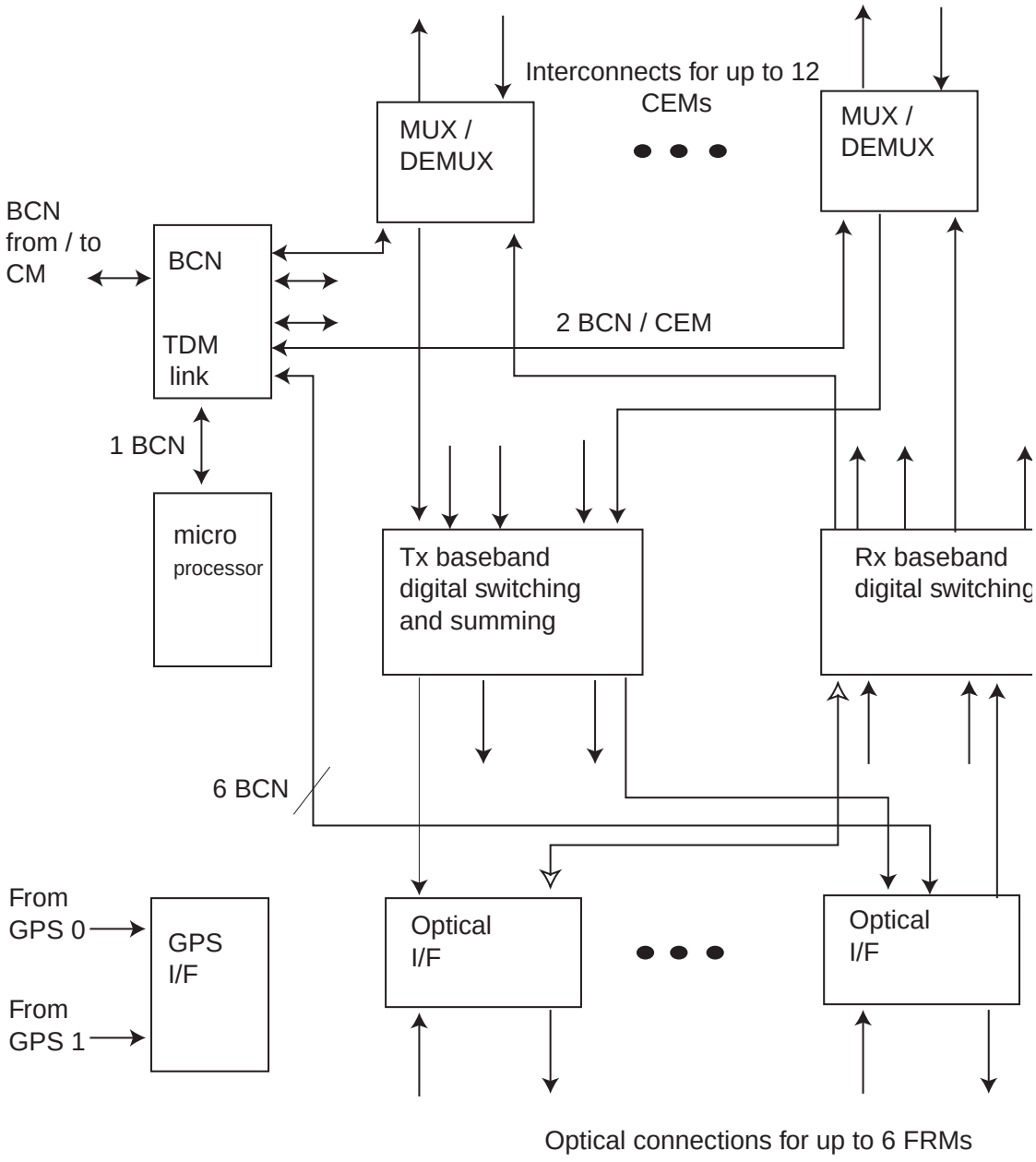

Required optics for operation and/or redundancy

- 1 Carrier 3 sector = 6 fibers no redundancy - 12 fibers for redundancy
- 2 Carrier 3 sector = 12 fibers no redundancy - 24 fibers for redundancy.
- 3 Carrier 3 sector = 18 fibers no redundancy - no redundancy available with this configuration.

BSC distribution consolodation (DISCO) port allocation

- a 1-carrier Metro Cell requires 1 to 2 CIS ports, assuming 1 to 4 CEMs are provisioned.
- a 2 - carrier Metro Cell requires 1 to 4 ports, assuming 2 to 8 CEMs are provisioned.
- a 3 - carrier Metro Cell requires 2 to 6 ports, assuming 3 to 12 CEMs are provisioned.

  Note: Note: A 3 - carrier Metro Cell requires at least 2 CIS ports. This is due to the fact that at the present time both DCGs must be active to support 3 carriers, and each DCG has its own pool of T1s.

Flexible RF modules (FRM)

An FRM is shown in Figure 38.

Figure 38
Flexible RF module

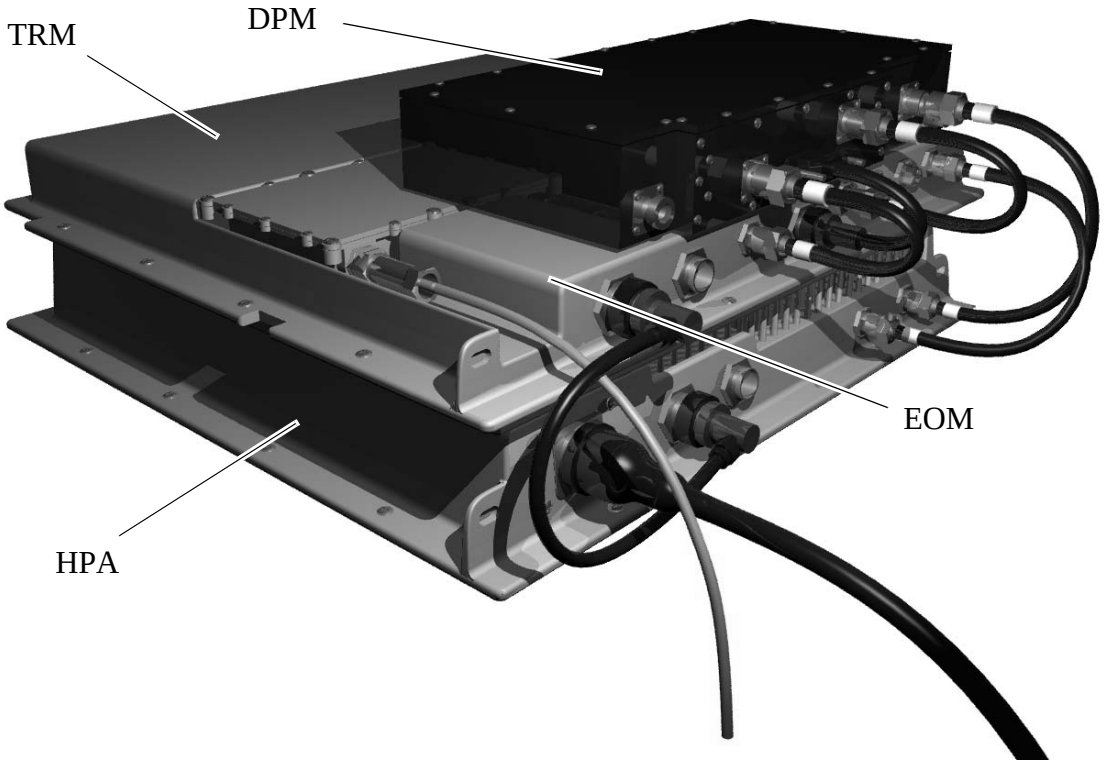

Figure 39
Layout of FRM connectors

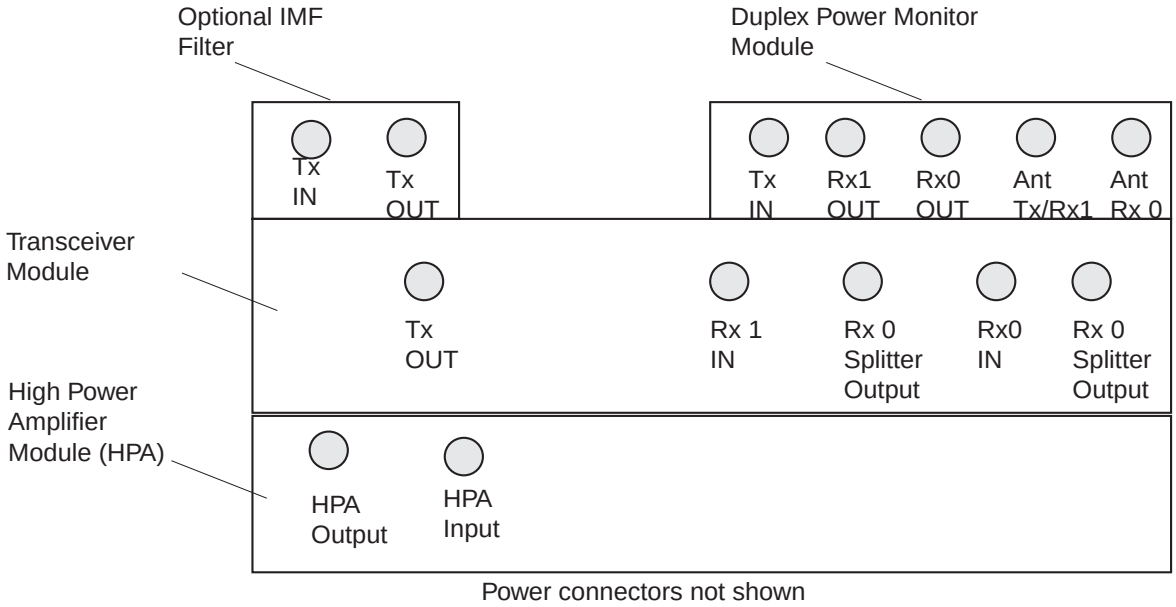

Each FRM can support one CDMA carrier on one sector. However, for compatibility with future multi carrier HPAs, the optical interface is designed for three carrier operation. With single carrier HPAs, multi-frequency operation is achieved using multiple FRMs.

Multi-frequency operation necessitates multiple antennas per sector. Multi-faceted antennas or multiple single facet antennas are to provide this functionality. A duplexer/LNA module is required for each antenna. Two carriers in each sector can be supported on a diversity pair of antennas (a diversity pair per sector is the minimum antenna requirement for any CDMA system) in each sector.

Within the receiver and upconverter many of the functions (E.G. filtering, Channelization, AGC) are performed digitally. Hence, the FRM interfaces to the digital enclosure are digital. The interface is implemented as a high speed serial digital optical link. The data transmitted over the optical link between the FRM and the CORE comprises Tx and Rx data , OAandM signalling, and frequency and timing reference signals.

The micro-controller and associated control circuitry within the FRM performs configuration, fault monitoring and several real time functions (mainly concerned with Tx sector power control) for the RF electronics.

The frequency reference recovery circuit recovers a frequency reference received over the optical interface with sufficient accuracy and low phase noise to meet ANSI J-STD-008 and IS-95 specifications.

An Flexible Radio Module (FRM) block diagram is shown in Figure 40.

Figure 40
Flexible radio module (FRM) block diagram

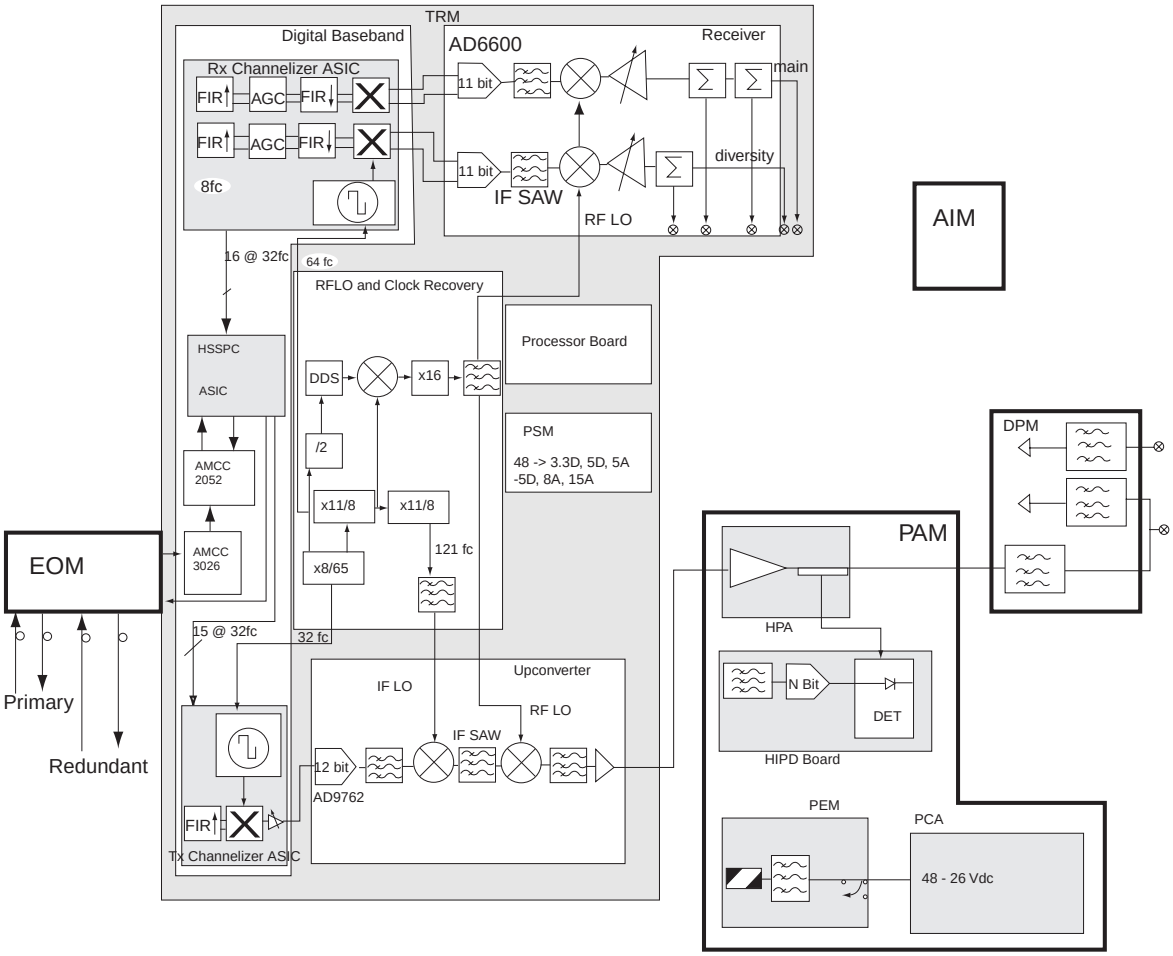

Depending upon the configuration, the FRM can be made up of some of the following components:

Transmit / Receive Module (TRM)

— The TRM contains the Transmit/Receive circuitry as well as the microprocessor board and the attendant power supply. The TRM is designed as an environmentally hardened module that is cooled using forced convection.

— The TRM consists of the following circuit packs :

– Power supply module (PSM)

– Transmit receive module (Transceiver board)
– Microprocessor Board (mP)

The internal layout of the TRM is shown in Figure 41.

Figure 41
Transmit / receive module internal layout

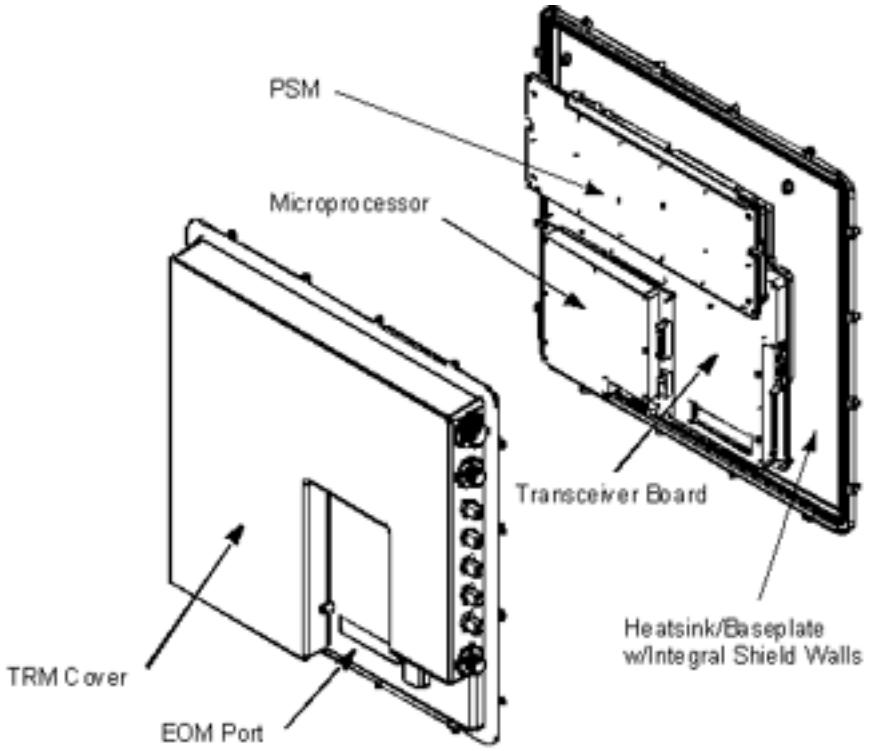

Duplexer/LNA Preselector/LNA Module (DPM) - 1900 MHz

The duplexer component of the module provides two functions:

— The duplexer provides isolation between the transmit and receive frequency bands thus facilitating the use of one antenna per diversity branch per sector.

— The duplexer provides filtering of the transmit and receive frequencies thus reducing interfering signals.

The LNA component of the module provides a low noise amplification at the system front end thus reducing the overall effects of noise.

The DPM operates within the FRM framework of the BTS system. The DPM is the last stage in the transmit section of the FRM preceding the antenna and lightning surge protectors; the FRMDPM is the first stage in the receive section of the FRM following the antenna and lightning surge protectors.

In the single carrier per sector case, the FRMDPM must include a preselector/ LNA that provides a conditioned antenna diversity signal to the receiver. Module 1 is comprised of the basic FRMDPM component with a preselector/ LNA. In the multicarrier per sector case, the FRMDPM does not require the additional preselector/LNA to achieve antenna diversity. Module 2 is comprised of the basic FRMDPM component without a preselector/LNA.

The 1.9 GHz PCS bandwidth, with respect to the FRMDPM operation, is subdivided into three bands, therefore three unique FRMDPM specifications are required. The FRMDPM specification #1 operates in the 1850 - 1870 MHz receive band and in the 1930 - 1950 MHz transmit band. The FRMDPM specification #2 operates in the 1870 - 1890 MHz receive band and in the 1950 - 1970 MHz transmit band. The FRMDPM specification #3 operates in the 1890 - 1910 MHz receive band and in the 1970 - 1990 MHz transmit band. There are three specification requirements for each module resulting in six different FRMDPM variations.

Figure 42 shows a drawing of a 1900 MHz. DPM.

Figure 42
General DPM drawing - 1900 MHz

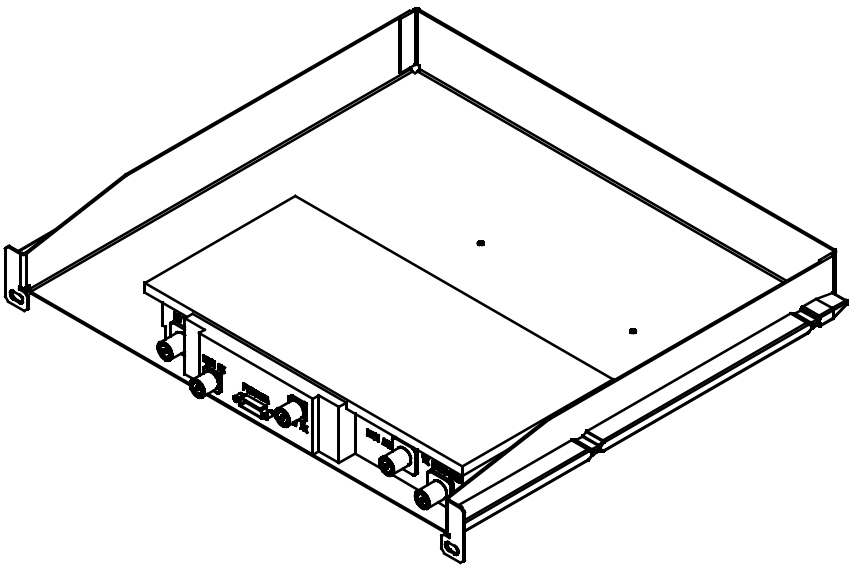

Duplexer/LNA module - 800 MHz

The duplexer component of the module provides two functions:

— The duplexer provides isolation between the transmit and receive frequency bands thus facilitating the use of one antenna per diversity branch per sector.

— The duplexer provides filtering of the transmit and receive frequencies thus reducing interfering signals.

The LNA component of the module provides a low noise amplification at the system front end thus reducing the overall effects of noise.

The 800 DPM operates within the SRFM framework of the 800 MHz CDMA base station. The 800 DPM is the last stage in the transmit section of the SRFM preceding the antenna and lightning surge protectors; the 800 DPM is the first stage in the receive section of the SRFM following the antenna and lightning surge protectors.

In the single carrier per sector case, the 800 DPM must include a preselector/LNA that provides a conditioned antenna diversity signal to the receiver. Module 1 is comprised of the basic 800 DPM800 DPM component with a preselector/LNA. In the multicarrier per sector case, the 800 DPM does not require the additional preselector/LNA to achieve antenna diversity. Module 2 is comprised of the basic 800 DPM component without a preselector/LNA.

The drawing in Figure 43 illustrates an 800 DPM.

Figure 43
General 800 DPM drawing

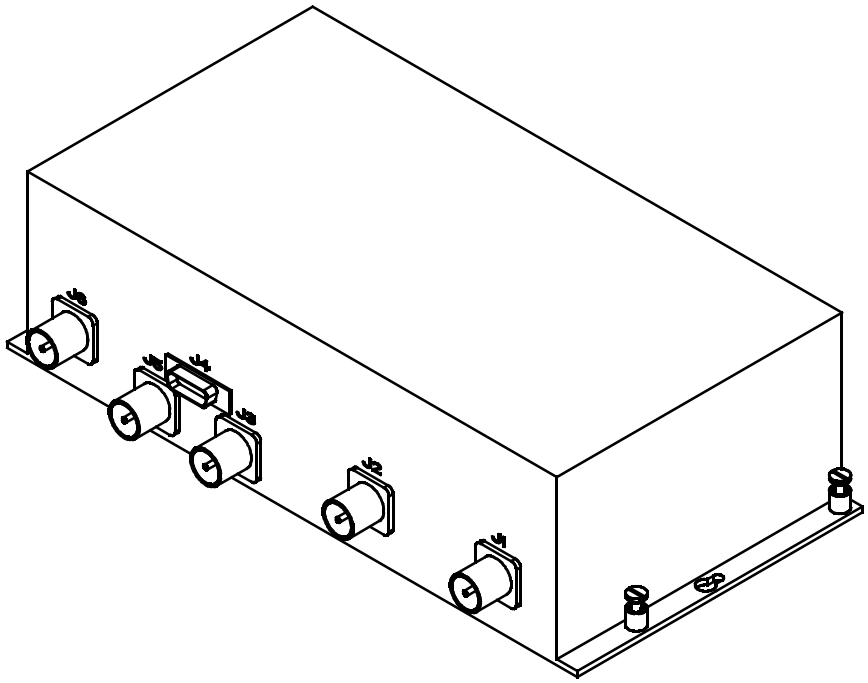

1900 FRM Triplexer Module (FRMTM)

The Triplexer component of the module provides three functions:

— The Triplexer provides isolation among the transmit signals and receive signals thus facilitating the use of one antenna for multicarrier forward link and reverse link.

— The Triplexer provides filtering of the transmit and receive signals thus reducing interfering signals.

— The Triplexer provides splitting between two received signals.

The LNA component of the module provides a low noise amplification at the system front end thus reducing the overall effects of noise.

The FRMTM operates within the FRM framework of the BTS system. The FRMTM is the last stage in the transmit section of the FRM preceding the antenna and lightning surge protectors; the FRMTM is the first stage in the receive section of the FRM following the antenna and lightning surge protectors.

The BTS system has both indoor and outdoor PCS base station using a CDMA scheme with multicarrier provisions. The base station is intended to operate in the 1830 - 1990 MHz region. The 1.9 GHz PCS bandwidth, with

respect to the FRMTM operation, is subdivided into three bands, therefore three unique FRMTM specifications are required. The FRMTM specification #1 operates in the 1850 - 1870 MHz receive band and in the 1930 - 1950 MHz transmit band. The FRMTM specification #2 operates in the 1870 - 1890 MHz receive band and in the 1950 - 1970 MHz transmit band. The FRMTM specification #3 operates in the 1890 - 1910 MHz receive band and in the 1970 - 1990 MHz transmit band. There are two module design requirements for each specification resulting in six different FRMTM variations.

Electro-optical Module (EOM)

— The optical fiber will terminate at the FRM electrically. The optical to electrical conversion is performed in the electro-optical module attached to the end of the fiber optic cable.

— The EOM contains the circuitry and optical transceivers required to convert the optical signal from the digital enclosure into an electrical signal

A diagram of an EOM is shown in Figure 44.

Figure 44
Electro-optical module

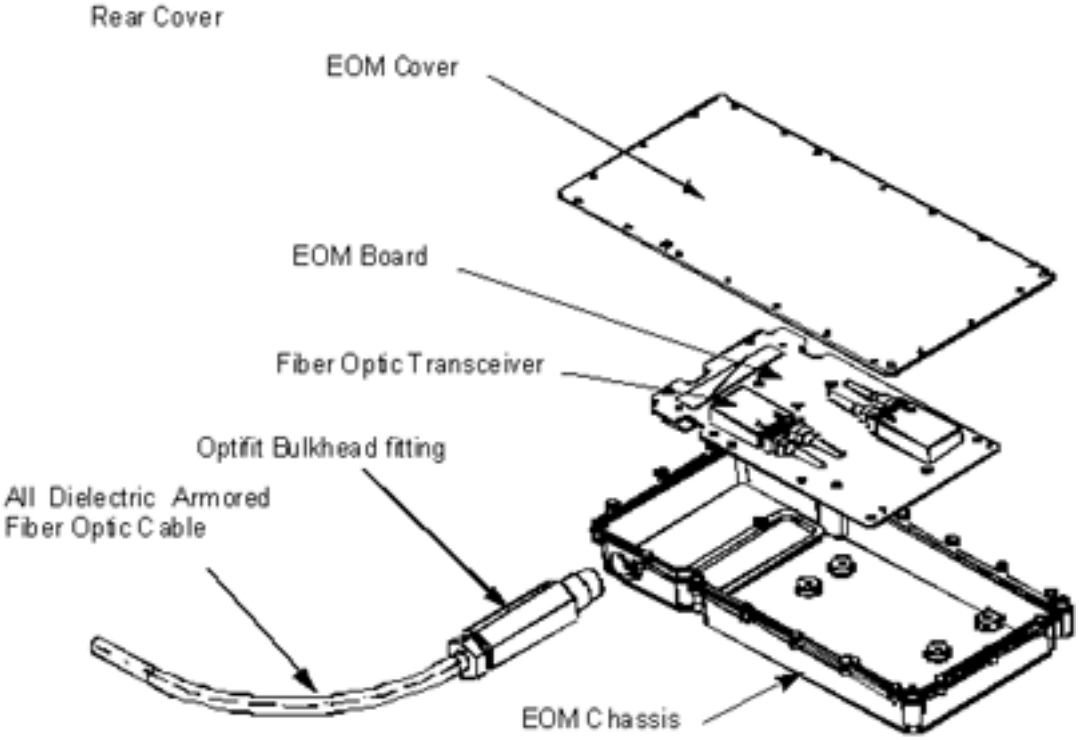

Power amplifier (PAM)

— The PAM contains the main heat dissipating components of the FRM. It is designed as an environmentally hardened module that is cooled using forced convection.

— The PAM consists of the following components :

- power entry module (PEM)
- single channel power amplifier (SCPA)
- power converter assembly (PCA)
  - the summary fault alarm from the PCA is a non-latching signal referenced to +26V_RTN that indicates that the PCA is operating normally and none of the protection features have been triggered.
- HPA interface and power detector board (HIPD) which:
  - measures the RMS power of the transmitted CDMA signal.
  - communicates the measurement to the TRM processor via the inter-integrated circuit (IIC) bus.
  - controls the enable / disable state of the HPA.
  - converts the status signals, HPA anxiety, HPA alarm, HPA fwdpwr, HPA revpwr and HPA temp to digital information to be transferred to the TRM processor via the IIC bus.
  - interfaces with the PCA and reports the status of the alarm to the TRM processor via the IIC bus.
  - allows storage of data within an IIC addressable EEPROM which is used for manufacturing information and calibration data for the power detector.
  - drives and powers the FAM.

Fan / alarm controller board

A diagram of the internal layout of the PAM is shown in Figure 45.

Figure 45
Power amplifier module - internal layout

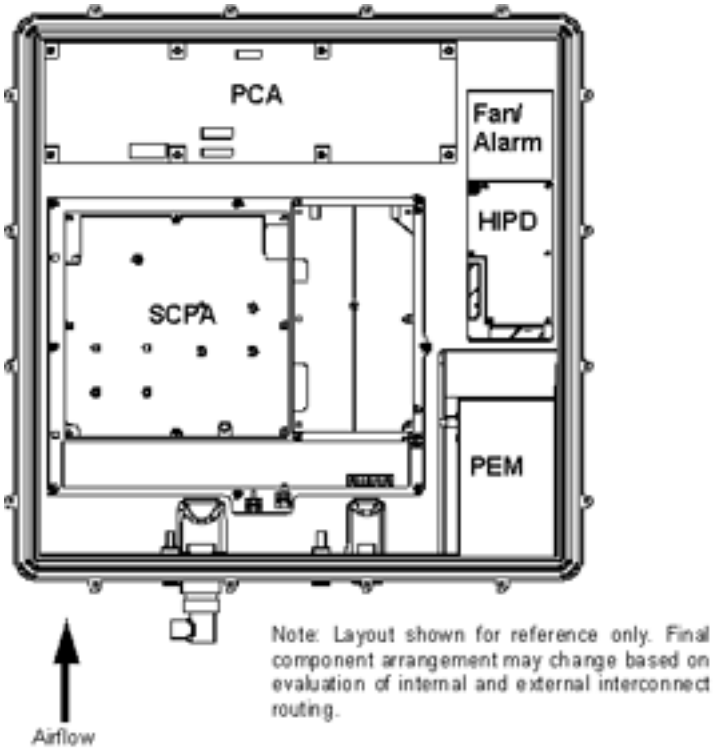

- Fan tray assembly
- Plenum assembly
- Alarm indicator

A group of 9 alarm indicators are located on an easily visible surface in front of each FRM as part of the FAM (Fan and Alarm Indicator Module). The indicators are consistent in size, shape and color with those on the modules within the DE. The indicator assignments are shown in Table 1:

Table 1
FRM indicator assignments

MODULE	GREEN RECTANGLE	RED TRIANGLE	AMBER CIRCLE	COMMENT
PAM	x	x	n	
TRM	x	x	n	
EOM	n	n	x	indicates no optical carrier detected
DPM	x	x	n	
FAM	x	x	n	

Fault management

FM software detects faults through diagnostic tests, reports the faults with sufficient information to replace or repair the faulty resource, and map fault reports into apposite alarms. This ensures high system availability through rapid fault detection, diagnosis, and recovery from faults.

The functionalities supported by FM include:

- fault Detection and Diagnosis: This includes,
  - — fault Resolution: Diagnose the location of the faults with enough precision to correct to problem during operations.
  - — fault Isolation: Diagnose the location of faults with enough precision to prevent the fault to damage the rest of the system;
- summarization and Reporting: Report the faults that are detected. If possible summarize multiple reports into a single report.
- redundancy: A secondary resource is reserved to take over from a failed primary resource.
- reconfiguration: Automatically reconfigure to use backup/alternate resources when the operating resource fail.
- recovery: Automatically attempt to recover resources that have failed.

Basestation communication network (BCN) distribution

The internal BTS BCN network is an extension of the BSC BCN network.

The BTS and BSC BCN networks are connected through a T1/E1 link (the backhaul link).

The BTSI in the CM passes the T1/E1 link in the internal BCN format. In the forward direction it routes the BCN packets from the BSC to the appropriate internal BCN entity over a dedicated link. In the reverse direction it routes and consolidates the 32 TDM links onto the T1/E1 backhaul links.

The CORE distributes the 32 TDM BCN links from the CM to the FRMs, CEMs, and the CORE processor. Each TDM BCN link has a bandwidth of 1.2288 Mbps.

Each CEM gets two BCN links, each FRM gets one. One goes to the CORE processor and one is a test link.

The BCN network carries traffic packets to/from the CEMs and OA&M traffic to/from all BCN entities.

The block diagram in Figure 46 shows the BCN distribution.

Figure 46
Basestation communication network (BCN) distribution

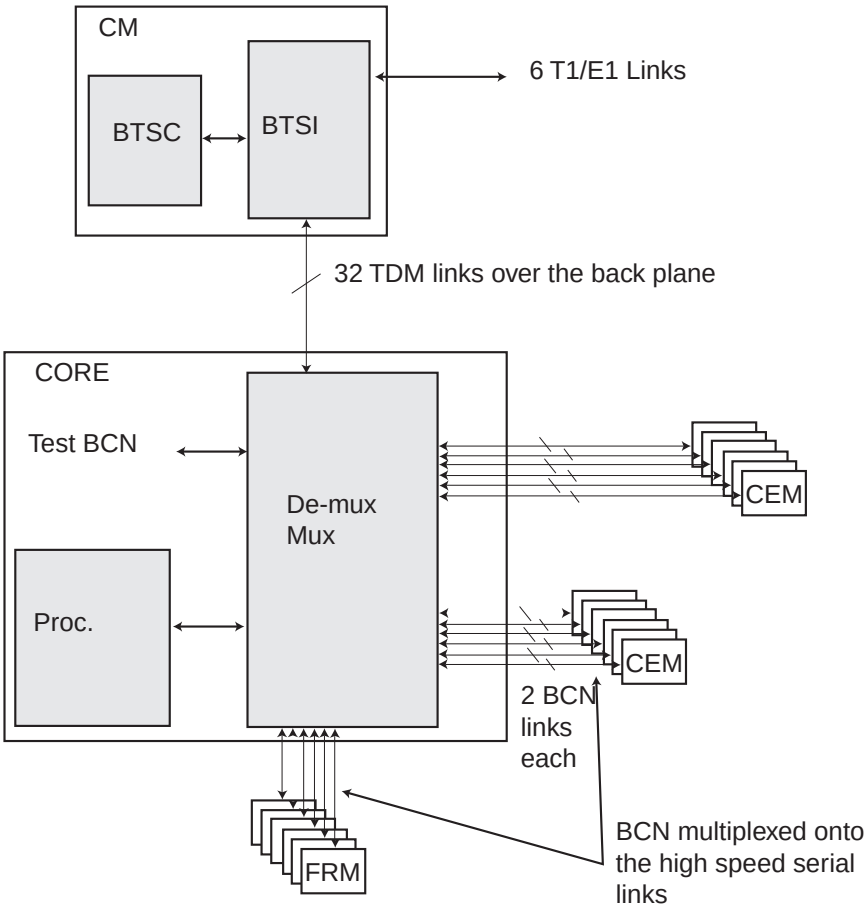

DE / RF module signalling

Figure 47
DE/RF module signalling

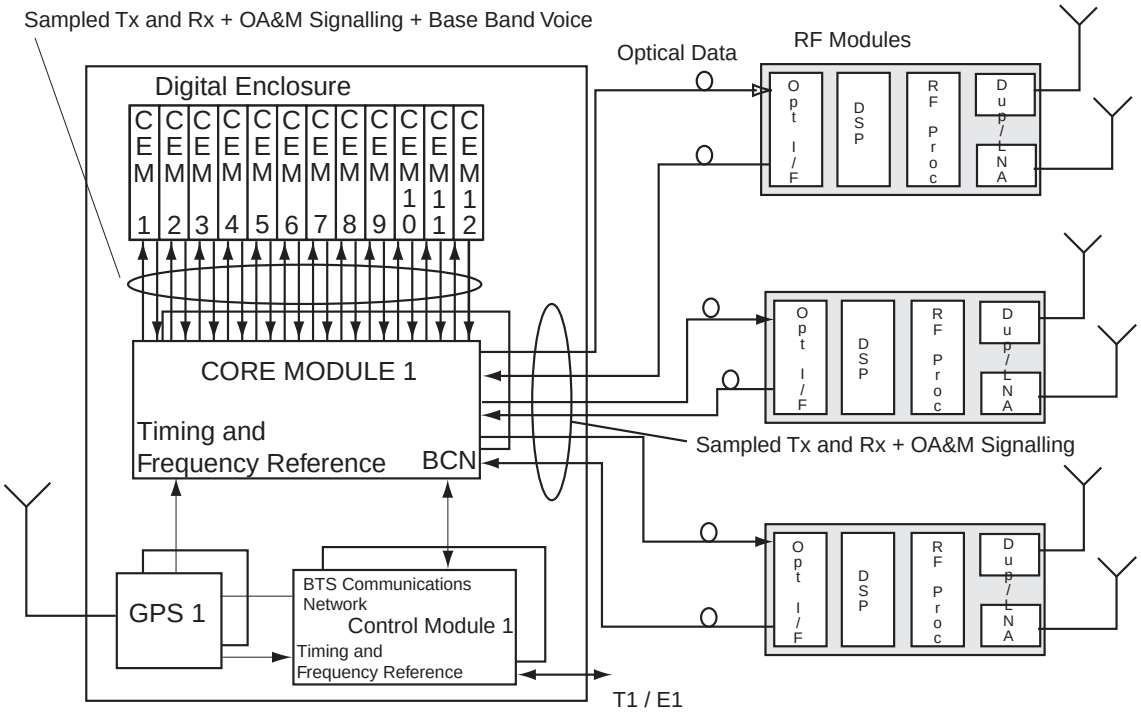

Signal flow

Forward link baseband signal flow

On the forward path the IB sums the two Channel Cards CDMA forward link Baseband and multiplexes it with the reverse link BCN traffic from the Channel cards.Reverse link baseband signal flow

On the reverse path the IB demultiplexes the 650 Mbps serial data from the CORE and splits it into CDMA forward link BCN data and CDMA reverse link baseband data.

Field Replaceable Units (FRU)

The following section lists the Field Replaceable Units (FRU) for the Outdoor and Indoor Metro Cells and the FRMs. A description of the procedures to replace the FRUs is found in NTP 411-2133-550 (Metro Cell Maintenance and Troubleshooting Guide).

Outdoor Metro Cell

Table 2
Outdoor Metro Cell FRU list

PEC	Description
NTGS15AA	Heat exchanger internal fan unit
NTGS16AA	Heat exchanger external fan unit
NTGS17AA	Heater Assembly
NTGS18AA	Cooling unit assembly
NT7C25BA	Enhanced controller module (ECM)
NT5C15BC	Mini-48 rectifier modules
NT7C25PC	Slave controller card
NTGS95AA	Battery string kit
NTGS30AA	Configuration resource module (CORE)
NTGS40AA	Control module (CM)
NTGS60AA	Channel element module (CEM-24)
NTGS60BA	Channel element module (CEM-48)
NTGS50AA	GPS module
NTGS53AA	FRM duplexer DPM, band A&D
NTGS53AA	FRM duplexer DPM, band B&E
NTGS53AA	FRM duplexer DPM, band C&F
NTGS53AA	FRM duplexer & preselector DPM, band A&D
NTGS53AA	FRM duplexer & preselector DPM, band B&E
NTGS53AA	FRM duplexer & preselector DPM, band C&F
NTGS54AA	FRM EOM - local RE
NTGS54BA	FRM EOM - remote RE - short
NTGS54CA	FRM EOM - remote RE - long
NTGS54ZA	FRM EOM assembly - local RE
NTGS54YA	FRM EOM assembly - remote RE - short

-sheet 1 of 2-

Table 2
Outdoor Metro Cell FRU list (continued)

PEC	Description
NTGS54XA	FRM EOM assembly - remote RE - long
NTGS55AA	FRM alarm indicator module
NTGS56AA	FRM fan tray assembly
NTGS57AA	FRM power amplifier module (PAM)
NTGS58AA	FRM transmit / receive module
NTGS7061	Lightning protector
NTGS7069	FRM termination load

-sheet 2 of 2-

Table 3
Indoor Metro Cell FRU list

PEC	Description
NTGS18AB	Cooling unit assembly
P0874870	Cooling unit filter
NT7C25BA	Enhanced controller module (ECM)
NTGS18AB	Cooling unit assembly
P0874870	Cooling unit filter
NT5C15BC	Mini-48 rectifier modules
NT7C25PC	Slave controller card
NTGS30AA	Configuration resource module (CORE)
NTGS40AA	Control module (CM)
NTGS60AA	Channel element module (CEM-24)
NTGS60BA	Channel element module (CEM-48)
NTGS50AA	GPS module
NTGS53AA	FRM duplexer DPM, band A&D

-sheet 1 of 2-

Table 3
Indoor Metro Cell FRU list (continued)

PEC	Description
NTGS53BA	FRM duplexer DPM, band B&E
NTGS53CA	FRM duplexer DPM, band C&F
NTGS53DA	FRM duplexer & preselector DPM, band A&D
NTGS53EA	FRM duplexer & preselector DPM, band B&E
NTGS53FA	FRM duplexer & preselector DPM, band C&F
NTGS54AA	FRM EOM local RE
NTGS54BA	FRM EOM remote RE - short
NTGS54CA	FRM EOM remote RE - long
NTGS54ZA	FRM EOM assembly - local RE
NTGS54YA	FRM EOM assembly - remote RE - short
NTGS54XA	FRM EOM assembly - remote RE - long
NTGS55AA	FRM alarm indicator module
NTGS56AA	FRM fan tray assembly
NTGS57AA	FRM power amplifier module (PAM)
NTGS58AA	FRM transmit / receive module

-sheet 2 of 2-

Table 4
FRM Metro Cell FRU list

PEC	Description
NTGS89BA	FRM duplexer DPM
NTGS89BB	FRM duplexer & preselector DPM
NTGS54BA	FRM EOM- remote RE- short
NTGS54CA	FRM EOM- remote RE- long
NTGS54ZA	FRM EOM - assembly - local RE

-sheet 1 of 2-

Table 4
FRM Metro Cell FRU list (continued)

PEC	Description (continued)
NTGS54YA	FRM EOM - assembly - remote RE - short
NTGS54XA	FRM EOM - assembly - remote RE - long
NTGS55AA	FRM alarm indicator module
NTGS56AA	FRM fan tray assembly
NTGS5650	FRM plenum assembly
NTGS82AA	FRM power amplifier module (PAM)
NTGS85AA	800 MHz FRM transmit / receive module

-sheet 2 of 2-

Software

Placeholder for Metro Cell software section.

Specifications

To be finalized.

Glossary

ACN
Applications Communication Network

AGC
Automatic Gain Control

AM
Accounting Management

ASIC
Application Specific Integrated Circuit

ATM-UL
Asynchronous Transfer Mode - Ultra Lite

BAN
Base Station Auxiliary Network

BCN
Basestation Communication Network

BIT
Built-In Test

BIU
Backhaul Interface Unit

BMU
Basestation Management Unit

BNC
Bayonet Navy Connector

BPM
Metro Cell Power Management

BSC
Base Station Controller

BSM
Base Station Manager

BTSC
Basestation Transceiver Subsystem Controller

BTSI
Basestation Transceiver Subsystem Interface

CA
Corrective Action

CAM
Call Manager

CC
Channel Card

CDMA
Code Division Multiple Access

CIS
CDMA Interconnect Subsystem

CLI
Command Line Interface

CM
Control Module

CM
Configuration Management

CMI
Call Manager Interface

CMS
Channel card Module Shelf

CORE
COnfiguration REsource

CPLD
CMOS Programmable Logic Device

CPU
Central Processing Unit

CRC
Cyclic Redundancy Check

CRM
Call Resource Manager

CSU/DSU
Customer Service Unit/Data Service Unit

DDLM
Dual Duplexer/LNA Module

DDS
Direct Digital Synthesizer

DE
Digital Enclosure

DEI
Digital Enclosure Interface

DFM
Design For Manufacturability

DISCO
DIstributor COmbiner

DMS-MTX
Digital Multiplex System - Mobile Telephone Exchange

DPM
Duplexer / LNA Preselector / LNA Module

DRAM
Dynamic RAM

DSP
Digital Signal Processor

DTC
Data / Digital Trunk Controller

ECC
Enhanced Controller Card

ECL
Emitter Coupled Logic

EMC
Electro Magnetic Compatibility

EMI
Electro Magnetic Interference

EOM
Electro Optical Module

EPROM
Erasable Programmable Read Only Memory

FA
Frequency Assignment

FCC
Federal Communication Commission

FER
Frame Error Rate

FFA
Fast Failure Analysis

FIR
Finite Impulse Response

FRU
Field Replaceable Unit

FM
Fault Management

FRM
Flexible Receiver Module

FRC
Frequency Reference Card

GPS
Global Positioning System

GPSR
GPS Receiver

GPSTM
Global Position Satellite Timing Module

GUI
Graphical User Interface

H/W
Hardware

HDLC
High level Data Link Control

HPA
High Power Amplifier

I/F
InterFace

IBN
Isolated Bonding Network

IF
Intermediate Frequency

IIC
Inter-Integrated Circuit

IMC
InterModule Communication

LNA
Low Noise Amplifier

LO
Local Oscillator

LPP
Link Peripheral Processor

LTM
Loopback Test Mobile

LVD
Low Voltage Disconnect

MDS
Mini Digital Shelf

MMI
Man Machine Interface

MTBF
Mean Time Between Failure

MTX
Mobile Telephone Exchange

MUX/DEMUX
Multiplex demultiplex

Nc
Navy Connector

NM
Network Management

OAM
Operations Administration and Maintenance

OCM
Overhead Channel Message

OCNS
Orthogonal Channel Noise Simulator

OEM
Original Equipment Manufacturer

OVP
Over Voltage Protection

PA
Power Amplifier

PAS
Product Administration System

PCA
Power Converter Assembly

PCB
Printed Circuit Board

PCM
Pulse Code Modulation

PCP
Printed Circuit Pack

PCS
Personal Communication System

PEM
Power Entry module

PLL
Phase Lock Loop

PLM
Product Line Management

PM
Performance Management

PR
Prevent Reoccurrence

PSU
Power Supply DC/DC converter

PUPS
Point of Use Power Supply

QCELP
Qualcomm Code Excited Linear Predictive

RAM
Random Access Memory

RCA
Root Cause Analysis

RCA
Radio CAlibration

RF
Radio Frequency

RLM
Radio Link Manager

RMS
Root Mean Square

SAC
Site Alarm Card

SAW
Surface Acoustical Wave

SBS
Selector Bank Subsystems

SBSC
SBS Controller

SCI
Selector Card Interface

SCPA
Single Channel Power Amplifier

SCPA
Single Channel PA

SCR
Single Channel Receiver

SCU
Single Channel Upconverter

SCU
Sector control Unit

SM
Site Management

SM
Security Management

SOM
Service Option Manager

SRFM
Single Channel RFM

SW
Software

TBD
To Be Determined

TDM
Time Division Multiplex

TFU
Timing & Frequency Unit

TM
Test Management

TNC
Threaded Navy Connector

TRM
Transmit / Receive Module

TST
Three Sector Transceiver

uP
micro Processor

UPS
Uninterruptable Power Supply

VO
Verification Office

VRLA
Valve Regulated Lead Acid

XDM
eXtended Diagnostic Monitor

CDMA

Metro Cell

Functional Description Manual

Nortel
Department 3431
4300 Emperor
Morrisville, NC 27560
Phone: (800) 684-2273/Fax: (919) 905-5854 / Fax: 684-3977

Copyright © 1998 Northern Telecom

NORTHERN TELECOM CONFIDENTIAL: The information contained in this document is the property of Northern Telecom. Except as specifically authorized in writing by Northern Telecom, the holder of this document shall keep the information contained herein confidential and shall protect same in whole or in part from disclosure and dissemination to third parties and use same for evaluation, operation, and maintenance purposes only.

Information is subject to change without notice.
Metro Cell, DMS-MTX, and MAP are trademarks of Northern Telecom.
Publication number: 411-2133-110
Product release: NBSS7.1
Document release: Prototype 01.04
Date: November 1998
Printed in the United States of America

NORTEL
NORTHERN TELECOM