ASTRO® 25
INTEGRATED VOICE AND DATA

GTR 8000 Base Radio

FEBRUARY 2020

MN003286A01-E

© 2020 Motorola Solutions, Inc. All rights reserved

Declaration of Conformity

Declaration of Conformity
Per FCC CFR 47 Part 2 Section 2.1077(a)

Responsible Party

Name: Motorola Solutions, Inc.

Address: 1303 East Algonquin Road, Schaumburg, IL 60196-1078, U.S.A.

Phone Number: 1-800-927-2744

Hereby declares that the product:

GTR 8000

conforms to the following regulations:

FCC Part 15, subpart B, section 15.107(a), 15.107(d), and section 15.109(a)

Class A Digital Device
This device complies with Part 15 of the FCC.

Note: This equipment has been tested and found to comply with the limits for a Class A digital device, pursuant to part 15 of the FCC Rules. These limits are designed to provide reasonable protection against harmful interference when the equipment is operated in a commercial environment. This equipment generates, uses, and can radiate radio frequency energy and, if not installed and used in accordance with the instruction manual, may cause harmful interference to radio communications. Operation of this equipment in a residential area is likely to cause harmful interference in which case the user will be required to correct the interference at his own expense.

Notice to Users (FCC)

This device complies with Part 15 of the FCC rules per the following conditions:

- This device may not cause harmful interference.
- This device must accept any interference received, including interference that may cause undesired operation.
- Changes or modifications made to this device, not expressly approved by Motorola Solutions, could void the authority of the user to operate this equipment.

Copyrights

The Motorola Solutions products described in this document may include copyrighted Motorola Solutions computer programs. Laws in the United States and other countries preserve for Motorola Solutions certain exclusive rights for copyrighted computer programs. Accordingly, any copyrighted Motorola Solutions computer programs contained in the Motorola Solutions products described in this document may not be copied or reproduced in any manner without the express written permission of Motorola Solutions.

© 2020 Motorola Solutions, Inc. All Rights Reserved

No part of this document may be reproduced, transmitted, stored in a retrieval system, or translated into any language or computer language, in any form or by any means, without the prior written permission of Motorola Solutions, Inc.

Furthermore, the purchase of Motorola Solutions products shall not be deemed to grant either directly or by implication, estoppel or otherwise, any license under the copyrights, patents or patent applications of Motorola Solutions, except for the normal non-exclusive, royalty-free license to use that arises by operation of law in the sale of a product.

Disclaimer

Please note that certain features, facilities, and capabilities described in this document may not be applicable to or licensed for use on a particular system, or may be dependent upon the characteristics of a particular mobile subscriber unit or configuration of certain parameters. Please refer to your Motorola Solutions contact for further information.

Trademarks

MOTOROLA, MOTO, MOTOROLA SOLUTIONS, and the Stylized M Logo are trademarks or registered trademarks of Motorola Trademark Holdings, LLC and are used under license. All other trademarks are the property of their respective owners.

European Union (EU) Waste of Electrical and Electronic Equipment (WEEE) directive

The European Union's WEEE directive requires that products sold into EU countries must have the crossed out trash bin label on the product (or the package in some cases).

As defined by the WEEE directive, this cross-out trash bin label means that customers and end-users in EU countries should not dispose of electronic and electrical equipment or accessories in household waste.

Customers or end-users in EU countries should contact their local equipment supplier representative or service centre for information about the waste collection system in their country.

Contact Us

The Solutions Support Center (SSC) is the primary contact for technical support included in your organization's service agreement with Motorola Solutions.

Service agreement customers should be sure to call the SSC in all situations listed under Customer Responsibilities in their agreement, such as:

- Before reloading software
- To confirm troubleshooting results and analysis before taking action

Your organization received support phone numbers and other contact information appropriate for your geographic region and service agreement. Use that contact information for the most efficient response. However, if needed, you can also find general support contact information on the Motorola Solutions website, by following these steps:

1. Enter motorolasolutions.com in your browser.
2. Ensure that your organization's country or region is displayed on the page. Clicking or tapping the name of the region provides a way to change it.
3. Select "Support" on the motorolasolutions.com page.

Comments

Send questions and comments regarding user documentation to documentation@motorolasolutions.com.

Provide the following information when reporting a documentation error:

- The document title and part number
- The page number or title of the section with the error
- A description of the error

Motorola Solutions offers various courses designed to assist in learning about the system. For information, go to https://learning.motorolasolutions.com to view the current course offerings and technology paths.

Document History

Version	Description	Date
MN003286A01-A	Original release of the *GTR 8000 Base Radio* manual	November 2016
MN003286A01-B	Updated the following sections: • CSS Initial Device Configuration on page 134 • GTR 8000 Base Radio General Troubleshooting on page 212	November 2016
MN003286A010-C	Updated the following sections: • Illegal Carrier Determination Feature (Trunked) on page 210 • Field Replaceable Units (FRUs) and Parts on page 222 • GTR 8000 Base Radio Industry Canada for Integrated Voice and Data UHF R1 (380–435 MHz) on page 48	February 2019
MN003286A010-D	Updated the following sections: • Field Replaceable Units (FRUs) and Parts on page 222 • Power Amplifier FRU Number Mappings on page 230	May 2019
MN003286A010-E	Updated the following sections to include additional FCC and safety information: • Declaration of Conformity on page 2 • General Safety Precautions on page 83 Updated the following sections to include information on the high-power/100W Power Amplifier (PA) in the VHF range and changes in the VHF, UHF R1, and UHF R2 ranges: • GTR 8000 Base Radio Specifications for Integrated Voice and Data VHF (136–174 MHz) on page 52 • GTR 8000 Base Radio Industry Canada for Integrated Voice and Data VHF (136–174 MHz) on page 56 • Field Replaceable Units (FRUs) and Parts on page 222 • Power Amplifier FRU Number Mappings on page 230 • GTR 8000 Base Radio Specifications for Integrated Voice and Data UHF R1 (380–435	February 2020

Version	Description	Date
	MHz) on page 45 – GTR 8000 Base Radio FCC Identification for IV&D UHF R1 (380–435 MHz) • GTR 8000 Base Radio Industry Canada for Integrated Voice and Data UHF R1 (380–435 MHz) on page 48 • GTR 8000 Base Radio Specifications for Integrated Voice and Data UHF R2 (435–524 MHz) on page 49 – GTR 8000 Base Radio FCC Identification for IV&D UHF R2 (435–524 MHz) • GTR 8000 Base Radio Industry Canada for Integrated Voice and Data UHF R2 (435–524 MHz) on page 52 • GTR 8000 Base Radio Specifications for Integrated Voice and Data VHF (136–174 MHz) on page 52 – GTR 8000 Base Radio FCC Identification for IV&D VHF (136–174 MHz) • GTR 8000 Base Radio Industry Canada for Integrated Voice and Data VHF (136–174 MHz) on page 56	

Contents

Declaration of Conformity 2
Copyrights 3
Contact Us 4
Document History 5
List of Figures 16
List of Tables 20
List of Processes 23
List of Procedures 24
About GTR 8000 Base Radio 27
What Is Covered In This Manual? 27
Helpful Background Information 27
Related Information 28
Chapter 1: GTR 8000 Base Radio Description 29
1.1 Introduction 29
1.2 GTR 8000 Base Radio Components 30
1.3 Supported System Configurations 30
1.3.1 Supported Frequencies for Trunked IV and D and Conventional Architectures 31
1.3.2 Supported Frequencies for HPD 31
1.4 Overview For a GTR 8000 Base Radio in a Trunked IP Simulcast Subsystem 31
1.5 Overview For a GTR 8000 Base Radio in an ASTRO 25 Repeater Site 31
1.6 Overview For a GTR 8000 Base Radio in a Trunked Single-Site Repeater Configuration 32
1.6.1 Configuring The Ethernet LAN Switch 34
1.7 Overview For a GTR 8000 Base Radio in a High Performance Data (HPD) Subsystem 34
1.8 Overview for a GTR 8000 Base Radio in Conventional Architectures 35
1.8.1 ASTRO 25 Conventional Base Radio 36
1.8.2 Analog Conventional Base Radio 37
1.9 Overview of a GTR 8000 Base Radio in a Trunked 3600 System 38
1.10 Power Efficiency Package 38
1.11 License Auditing 39
1.12 GTR 8000 Base Radio Specifications 40
1.12.1 GTR 8000 Base Radio Specifications for Integrated Voice and Data (700/800 MHz) 40
1.12.1.1 GTR 8000 Base Radio Industry Canada for Integrated Voice and Date (700/800 MHz) 44
1.12.2 GTR 8000 Base Radio Specifications for Integrated Voice and Data UHF R1 (380–435 MHz) 45

1.12.2.1 GTR 8000 Base Radio Industry Canada for Integrated Voice and Data UHF R1 (380–435 MHz)....48
1.12.3 GTR 8000 Base Radio Specifications for Integrated Voice and Data UHF R2 (435–524 MHz) 49
1.12.3.1 GTR 8000 Base Radio Industry Canada for Integrated Voice and Data UHF R2 (435–524 MHz)....52
1.12.4 GTR 8000 Base Radio Specifications for Integrated Voice and Data VHF (136–174 MHz) 52
1.12.4.1 GTR 8000 Base Radio Industry Canada for Integrated Voice and Data VHF (136–174 MHz)....56
1.12.5 GTR 8000 Base Radio Specifications for High Performance Data (700/800 MHz).... 56
1.12.5.1 GTR 8000 Base Radio Industry Canada for High Performance Data (700/800 MHz).... 59
1.12.6 Specifications for GTR 8000 Base Radio Cabinet.... 59
Chapter 2: GTR 8000 Base Radio Theory of Operation....61
2.1 Functions of the GTR 8000 Base Radio Modules.... 61
2.1.1 Function of the Transceiver Module....61
2.1.1.1 Transceiver Control Board.... 62
2.1.1.2 Transceiver RF Board 62
2.1.1.3 Transceiver External Interfaces.... 63
2.1.2 Function of the Power Amplifier Module.... 64
2.1.2.1 Power Amplifier Input/Output Connections.... 65
2.1.3 Function of the Fan Module.... 66
2.1.4 Function of the Power Supply....67
2.1.4.1 AC/DC Power Distribution – Base Radio.... 68
2.1.4.2 Power Supply Battery Charger....68
2.1.4.3 Battery Temperature Sensor Cable.... 69
2.1.4.4 ON/OFF Switch for Power Supply and Battery Charger.... 69
2.1.4.5 Power Supply Module Backplane Connections.... 70
2.2 Backplanes and Card Cages.... 70
2.3 RFDS Modules.... 71
2.3.1 RFDS Preselector (700/800 MHz).... 71
2.3.2 RFDS Preselector (UHF).... 71
2.3.3 RFDS Preselector (VHF).... 72
2.3.4 RFDS - Transmit Filter (700/800 MHz).... 72
2.3.5 RFDS - Duplexer (700/800 MHz)....73
2.3.6 RFDS - Duplexer (UHF)....73
2.3.7 RFDS - Duplexer (VHF)....74
2.3.8 RFDS - External Dual Circulator/Isolator Tray (700/800 MHz).... 75
2.3.9 RFDS - External Dual Circulator/Isolator Tray (UHF).... 75

2.3.10 RFDS - External Dual Circulator/Isolator Tray (VHF)..... 76
2.3.11 Antenna Relay Module.....76
2.3.11.1 Mounting Locations.....77
2.3.11.2 Functional Operation.....79
Chapter 3: GTR 8000 Base Radio Installation..... 82
3.1 Pre-Installation Tasks..... 82
3.1.1 Equipment Installation Process Overview.....82
3.2 General Safety Precautions.....83
3.2.1 GTR 8000 Base Radio Supplemental Safety Installation Requirements..... 84
3.2.2 DC Mains Grounding Connections..... 85
3.2.2.1 Disconnect Device Permanently Connected.....85
3.2.2.2 Multiple Power Sources..... 85
3.2.2.3 Connection to Primary Power..... 85
3.2.2.4 Replaceable Batteries..... 85
3.2.3 Maintenance Requiring Two People..... 86
3.2.4 Equipment Racks.....86
3.3 General Installation Standards and Guidelines..... 86
3.3.1 General Site Preparation Overview..... 86
3.3.2 General Equipment Inspection and Inventory Recommendations.....87
3.3.3 General Placement and Spacing Recommendations..... 87
3.3.4 General Cabinet Bracing Recommendations.....88
3.3.5 Mounting Cabinets or Racks to a Floor.....88
3.3.6 General Bonding and Grounding Requirements.....89
3.3.7 General Cabling Requirements.....89
3.3.8 General Power Guidelines and Requirements.....89
3.3.8.1 General AC Power Guidelines and Requirements.....90
3.3.8.2 General Breaker Recommendations.....90
3.3.8.3 General Battery Installation Recommendations.....91
3.3.9 General Electrostatic Discharge Recommendations..... 91
3.3.10 FCC Requirements..... 91
3.3.11 Networking Tools..... 92
3.3.12 General Installation/Troubleshooting Tools..... 92
3.3.12.1 General Tools.....92
3.3.12.2 Rack Tools..... 92
3.3.13 Technical Support for Installation.....93
3.3.13.1 Site-Specific Information..... 93
3.4 GTR 8000 Base Radio Hardware Installation.....94
3.4.1 Placement and Spacing.....94
3.4.2 Cabinet Version of the GTR 8000 Base Radio..... 94

3.4.2.1 Floor Mounting the Cabinet Version of the GTR 8000 Base Radio..... 95
3.4.2.2 Physical Dimensions and Clearances of the Cabinet Version of the GTR 8000 Base Radio.....96
3.4.2.3 Cabinet Mounting Rails.....97
3.4.2.4 Vertical Lifting of Cabinets..... 97
3.4.2.5 Removing/Replacing a Cabinet Door.....98
3.4.3 Rack Mounting The GTR 8000 Base Radio.....100
3.4.3.1 Mounting the GTR 8000 Base Radio..... 100
3.4.4 Connecting Power.....101
3.4.4.1 Connecting Power Cables to a GTR 8000 Base Radio..... 101
3.4.4.2 DC Power Connection Wire Gauge Calculations for Integrated Voice and Data.....101
3.4.4.3 DC Power Connection Wire Gauge Calculations for HPD..... 102
3.4.4.4 Battery Temperature Sensor Mounting..... 103
3.4.5 GTR 8000 Base Radio Grounding..... 104
3.4.5.1 Grounding the GTR 8000 Base Radio..... 105
3.4.6 GTR 8000 Base Radio Rear Connections (Integrated Voice and Data)..... 105
3.4.7 GTR 8000 Base Radio Rear Connections (HPD)..... 108
3.4.8 GTR 8000 Base Radio Front Connections..... 110
3.4.8.1 System Connector Ports (Conventional).....112
3.4.8.2 System Connector Ports (Trunked 3600).....115
3.4.8.3 Wireline Port Pin-Outs.....117
3.4.8.4 Microphone Port Pin-Outs.....118
3.4.8.5 Speaker Port Pin-Outs..... 118
3.4.8.6 V.24 Port Pin-Outs..... 119
3.4.8.7 GTR 8000 Base Radio Part 68 Information..... 119
3.5 Installation/Troubleshooting Tools..... 120
3.5.1 Quick Connect RF Coaxial Adapters for GTR 8000 Base Radio Support..... 121
3.6 Installing Device Software Prerequisites..... 121
3.7 Software Download Manager..... 123
3.8 Installing Devices in the UNC..... 124
3.8.1 Discovering a Device in the UNC.....125
3.8.2 Loading Device OS Images to the UNC..... 126
3.8.3 Loading Software to a Device..... 127
3.8.3.1 Enabling FTP Service..... 127
3.8.3.2 Transferring and Installing the OS Image..... 127
3.8.3.3 Inspecting Device Properties for Transferred and Installed Software..... 130
3.8.3.4 Disabling FTP Service.....131
Chapter 4: GTR 8000 Base Radio Configuration.....132
4.1 Configuration Software..... 132

4.2 Discovering a Device in the UNC..... 132
4.3 Security/Authentication Services..... 133
4.4 Device Configuration in CSS..... 134
4.4.1 CSS Initial Device Configuration..... 134
4.4.2 Connecting Through a Serial Port Link..... 135
4.4.3 Serial Connection Configurations..... 137
4.4.3.1 Setting the Device IP Address and Pairing Number in CSS..... 137
4.4.3.2 Pairing To a Comparator..... 137
4.4.3.3 Serial Security Services in CSS..... 138
4.4.3.4 Resetting SNMPv3 User Credentials to Factory Defaults in CSS..... 139
4.4.4 Connecting Through an Ethernet Port Link..... 140
4.4.5 Ethernet Connection Configurations..... 142
4.4.5.1 Setting the BR/CM Pairing Number in CSS..... 142
4.4.5.2 Setting the Date and Time in CSS..... 143
4.4.5.3 Changing SNMPv3 Configuration and User Credentials in CSS..... 143
4.4.5.4 Customizing the Login Banner in CSS..... 146
4.4.5.5 Setting the SWDL Transfer Mode in CSS..... 147
4.4.5.6 Manager IP Address Settings in CSS..... 148
4.4.5.7 NTP Server Settings in CSS..... 148
4.4.5.8 Setting the Local Password Configuration in CSS..... 149
4.4.6 Setting CSS Configuration Parameters for the GTR 8000 Base Radio (Trunked Simulcast)..... 150
4.4.7 Setting CSS Configuration Parameters for the GTR 8000 Base Radio (Trunked Repeater)..... 151
4.4.8 Setting CSS Configuration Parameters for the GTR 8000 Base Radio (HPD)..... 151
4.4.9 Setting CSS Configuration Parameters for the GTR 8000 Base Radio (Conventional)..... 152
4.4.10 Configuring Tx Power Values and Battery Type..... 153
4.4.11 Setting RMC System Gain..... 154
4.5 Configuring Centralized Authentication on Devices in VoyenceControl..... 154
Chapter 5: GTR 8000 Base Radio Optimization..... 156
5.1 Aligning the Internal Frequency Reference Oscillator..... 156
5.1.1 GTR 8000 Base Radio Time and Frequency Inputs..... 157
5.2 Battery Equalization..... 158
5.3 ASTRO Simulcast Alignment (Trunked Operation)..... 158
5.4 ASTRO/Analog Simulcast Alignment (Conventional Operation)..... 158
5.5 Carrier Squelch Alignment..... 158
5.6 Tx Wireline Alignment 159
5.7 Rx Wireline Alignment..... 159
5.8 Transmitter Testing..... 159

5.9 Tuning a Preselector....159
5.9.1 VHF Tuning Procedures.... 160
5.9.1.1 Calculating Proper VHF Alignment Frequency.... 160
5.9.1.2 Preparing the Equipment for VHF Alignment.... 161
5.9.1.3 Tuning The VHF Preselector....161
5.9.2 UHF Tuning Procedures.... 162
5.9.2.1 Calculating Proper UHF Alignment Frequency.... 163
5.9.2.2 Preparing the Equipment for UHF Alignment....164
5.9.2.3 Tuning The UHF Preselector.... 164
5.10 Tuning a Duplexer.... 165
5.10.1 Field Tuning Overview.... 165
5.10.2 Required Test Equipment.... 165
5.10.3 Tuning a 700/800 MHz Duplexer.... 166
5.10.4 Tuning a VHF Duplexer.... 166
5.10.4.1 VHF Duplexer Tuning Setup.... 166
5.10.4.2 VHF Duplexer Low Pass Resonators Tuning Set Up....168
5.10.4.3 VHF Duplexer High Pass Resonators Tuning Set Up....169
5.10.4.4 VHF Duplexer High Notch Loop Assemblies Tuning Set Up.... 170
5.10.4.5 VHF Duplexer Low Notch Loop Assemblies Tuning Set Up.... 171
5.10.4.6 VHF Duplexer Insertion Loss Verification Set Up.... 172
5.10.4.7 VHF Duplexer Isolation Verification Set Up.... 174
5.10.4.8 Checking VHF Duplexer After Tuning....176
5.10.5 Tuning a UHF Duplexer.... 176
5.10.5.1 UHF Duplexer Tuning Set Up.... 176
5.10.5.2 UHF Duplexer Low Pass Resonators Tuning Set Up.... 177
5.10.5.3 UHF Duplexer High Pass Resonators Tuning Set Up....178
5.10.5.4 UHF Duplexer High Notch Loop Assemblies Tuning Set Up.... 179
5.10.5.5 UHF Duplexer Low Notch Loop Assemblies Tuning Set Up....180
5.10.5.6 UHF Duplexer Insertion Loss Verification Set Up.... 181
5.10.5.7 UHF Duplexer Isolation Verification Set Up.... 182
5.10.5.8 Checking UHF Duplexer After Tuning....184
5.11 Testing the GTR 8000 Base Radio Performance with a Service Monitor for Integrated Voice and Data.... 184
5.11.1 Deviation Standards (Digital Operation).... 184
5.11.2 Monitoring the Power Supply Module.... 185
5.11.3 Verifying Receiver Performance for FDMA Operation....185
5.11.4 Verifying Receiver Performance in TTA Operation....187
5.11.4.1 Effective Receiver Sensitivity....190
5.11.5 Verify Receiver Performance for APCO TDMA Operation....190
5.11.6 Verifying Receiver Performance (Analog Operation)....190

5.11.7 Checking Receiver Sensitivity (Self-Test Method) (IV and D)..... 192
5.11.8 Monitoring the Transmitter Metering Points..... 193
5.11.9 Verifying Transmitter Performance (Digital Operation)..... 193
5.11.10 Verifying Transmitter Performance (Analog Operation)..... 195
5.12 Testing the GTR 8000 Base Radio Performance with a Service Monitor for HPD..... 197
5.12.1 Setting Up the HPD Service Monitor for Testing the Base Radio..... 198
5.12.2 Performing In-band Power Meter User Calibration..... 199
5.12.3 Measuring HPD Base Radio Tx Power, Frequency Accuracy, and Tx EVM..... 200
5.12.4 Measuring HPD Base Radio Rx Sensitivity and Rx BER.....203
5.12.5 Checking Receiver Sensitivity (Self-test Method) (HPD)..... 206
Chapter 6: GTR 8000 Base Radio Maintenance..... 208
6.1 Fan Grill Cleaning Instructions.....208
6.2 Aligning the Internal Frequency Reference Oscillator..... 208
Chapter 7: GTR 8000 Base Radio Operation..... 209
7.1 Base Radio Operational States for Trunked Simulcast..... 209
7.2 Base Radio Operational States for Trunked Repeater and HPD.....209
7.3 Base Radio Operational States for Conventional..... 210
7.3.1 Packet Data interactions with Multiple NACs.....210
7.3.2 Supplementary Signaling interactions with Multiple NACs..... 210
7.4 Illegal Carrier Determination Feature (Trunked)..... 210
7.5 RF Channel Interference Determination Feature (Conventional)..... 211
Chapter 8: GTR 8000 Base Radio Troubleshooting.....212
8.1 GTR 8000 Base Radio General Troubleshooting..... 212
8.2 GTR 8000 Base Radio Troubleshooting Tools..... 215
8.2.1 Links and Components Monitoring in Unified Event Manager..... 215
8.2.1.1 Unified Event Manager Active Alarm Window Analyzation..... 216
8.2.1.2 Diagnostic Options in Unified Event Manager.....216
8.2.2 MOSCAD Network Fault Management..... 216
8.2.3 Device Troubleshooting in Unified Network Configurator..... 217
8.2.4 GTR 8000 Base Radio Troubleshooting in Configuration/Service Software.....217
8.2.4.1 Internal Diagnostic Test Alarm Log..... 218
8.2.4.2 Local Password and SNMPv3 Passphrase Troubleshooting.....218
8.3 Site Controller Failure Impact on GTR 8000 Base Radio for Trunked Operation.....219
8.4 Conventional Site Controller Failure - Impact on GTR 8000 Base Radio for Conventional Operation..... 219
8.5 Motorola Solutions Support Center.....219
8.5.1 Information Necessary to Contact Motorola Solutions Support Center..... 219
8.5.2 Where to Call for Service..... 220
8.5.2.1 Motorola Solutions Support Center..... 220

8.5.3 Subcontractors....221

Chapter 9: GTR 8000 Base Radio FRU Procedures....222

9.1 Field Replaceable Units (FRUs) and Parts....222

9.2 Transceiver Hardware Generations....226

9.2.1 Transceiver Software and Feature Compatibilities....226

9.2.2 Identifying Transceiver Hardware Generation....227

9.2.3 Transceiver FRU Number Mappings....228

9.3 Power Amplifier Hardware Generations....229

9.3.1 Power Amplifier Software and Feature Compatibilities....229

9.3.2 Identifying Power Amplifier Hardware Generation....230

9.3.3 Power Amplifier FRU Number Mappings....230

9.4 Replacing a Transceiver Module....231

9.5 Replacing the Fan Assembly....237

9.6 Replacing a Power Supply....238

9.7 Replacing a Power Supply Fan....240

9.8 Replacing a Power Amplifier....242

9.9 Replacing a GTR 8000 Base Radio Backplane....245

9.10 Replacing a Preselector Filter....250

9.11 Replacing Transmit Filters (700/800 MHz)....251

9.12 Replacing the Dual Circulator/Isolator Modules....253

9.13 Replacing a Duplexer (700/800 MHz)....257

9.14 Replacing a Duplexer (UHF)....259

9.15 Replacing a Duplexer (VHF)....261

9.16 Replacing an Antenna Relay....262

Chapter 10: GTR 8000 Base Radio Reference....264

10.1 GTR 8000 Base Radio LEDs....264

10.1.1 GTR 8000 Base Radio Transceiver LEDs....264

10.1.1.1 Transceiver Status and Alarm LEDs....265

10.1.1.2 Transceiver Ethernet Link Status LEDs....265

10.1.1.3 Transceiver Application-Controlled LEDs....266

10.1.1.4 Transceiver Services-Controlled LEDs....267

10.1.2 Transceiver Option Card Intercom LED....267

10.1.3 Power Amplifier LEDs....268

10.1.4 Fan Module LED....268

10.1.5 Power Supply LEDs....269

10.2 RFDS Equipment Specifications....270

10.2.1 Transmit Filter Specifications (700/800 MHz)....270

10.2.2 Preselector Filter Specifications (700/800 MHz)....271

10.2.3 Preselector Filter Specifications (UHF)....271

10.2.4 Preselector Filter Specifications (VHF)....271
10.2.5 Duplexer Specifications (700/800 MHz)....272
10.2.6 Duplexer Specifications (UHF)....272
10.2.7 Duplexer Specifications (VHF)....273
10.2.8 External Dual Circulator Specifications (700/800 MHz)....273
10.2.9 External Dual Circulator Specifications (UHF)....274
10.2.10 External Dual Circulator Specifications (VHF)....274
10.2.11 Antenna Relay Specifications....275
Chapter 11: GTR 8000 Base Radio Disaster Recovery....276
11.1 Recovering the GTR 8000 Base Radio....276
11.2 Performing a Site Download With PSC 9600 Site Controllers....276
11.3 Performing a Site Software Download With GCP 8000 Site Controllers....278
Appendix A: Conventional GTR 8000 Base Radio Option Kits....281
A.1 T2-2R, T3-3R, and T4-4R Receiver Mute Option Kits....281
A.1.1 T2-2R Receiver Mute Option Kit....281
A.1.1.1 T2-2R Receiver Mute Option Kit Parts List....282
A.1.2 T3-3R Receiver Mute Option Kit....283
A.1.2.1 T3-3R Receiver Mute Option Kit Parts List....284
A.1.3 T4-4R Receiver Mute Option Kit....285
A.1.3.1 T4-4R Receiver Mute Option Kit Parts List....287
A.1.4 Expected Site Performance for T2-2R, T3-3R, and T4-4R Receiver Mute....289
A.1.5 Tn-nR Receiver Mute Option Kit....289
A.1.5.1 Tn-nR Receiver Mute Option Kit Parts List....290
A.1.6 Installing the T2-2R, T3-3R, and T4-4R Receiver Mute Option Kits....291
A.1.7 Configuring the T2-2R, T3-3R, and T4-4R Receiver Mute Option Kits....292
A.2 T1-2R with Talk-Around Option Kit....295
A.2.1 T1-2R with Talk-Around Option Kit Parts List....296
A.2.2 Site Performance Expected for T1-2R with Talk-Around....297
A.2.3 Installing the T1-2R with Talk-Around Option Kit....298
A.2.4 Configuring the T1-2R with Talk-Around Option Kit....299
A.3 T2-2R with Duplexer and Triple Relay Option Kit....301
A.3.1 T2-2R with Duplexer and Triple Relay Option Kit Parts List....304
A.3.2 Site Performance Expected for T2-2R with Duplexer and Triple Relay....305
A.3.3 Installing the T2-2R with Duplexer and Triple Relay Option Kit....306
A.3.4 Configuring the T2-2R with Duplexer and Triple Relay Option Kit....307

List of Figures

Figure 1: GTR 8000 Base Radio.....29
Figure 2: Single-Site Repeater Configuration 1.....33
Figure 3: Single Site Repeater Configuration 2.....33
Figure 4: GTR 8000 Base Radios in HPD Remote Site.....35
Figure 5: Transceiver Module (Front View).....61
Figure 6: Transceiver Control Board Information Flow.....62
Figure 7: Transceiver RESET Switch (viewable through the drop-down door).....63
Figure 8: Transceiver Option Card Intercom Button (behind the fan module).....64
Figure 9: Transceiver Module (Backplane Connections).....64
Figure 10: Power Amplifier Module.....65
Figure 11: Power Amplifier (Backplane Connections).....66
Figure 12: Fan Module.....66
Figure 13: Power Supply.....67
Figure 14: AC and DC Power Distribution in the GTR 8000 Base Radio.....68
Figure 15: Power Supply Connections (Rear).....70
Figure 16: Preselector Filter (700/800 MHz).....71
Figure 17: Preselector (UHF).....72
Figure 18: Preselector (VHF).....72
Figure 19: Transmit Filter (700/800 MHz).....73
Figure 20: Duplexer (700/800 MHz).....73
Figure 21: Duplexer (UHF).....74
Figure 22: Duplexer (VHF).....74
Figure 23: External Dual Circulator/Isolator Tray (700/800 MHz).....75
Figure 24: External Dual Circulator/Isolator Tray (UHF).....76
Figure 25: Antenna Relay Module Connections.....77
Figure 26: Base Radio Backplane Mounting Location.....77
Figure 27: Antenna Relay Module Mounted on Backplane Cover.....78
Figure 28: Antenna Relay Module Mounted on Peripheral Tray.....79
Figure 29: Functional Block and Interconnect Diagram for Antenna Relay Module (Bracket Mounting).....80
Figure 30: Functional Block and Interconnect Diagram for Antenna Relay Module (Peripheral Tray Mounting).....81
Figure 31: Warning Label on Hot Modules.....84
Figure 32: GTR 8000 Base Radio (Cabinet Version) – Floor Mounting Detail.....95
Figure 33: Cabinet Dimensions.....96
Figure 34: Cabinet Mounting Rails.....97
Figure 35: Lifting a Cabinet with a Harness.....98

Figure 36: Cabinet Door Removal.....99
Figure 37: Cabinet Door Replacement.....99
Figure 38: Base Radio Mounted in Rack 100
Figure 39: Battery Temperature Sensor Example 1.....103
Figure 40: Battery Temperature Sensor Example 2.....104
Figure 41: Rack Grounding..... 105
Figure 42: Base Radio Integrated Voice and Data Backplane..... 106
Figure 43: Base Radio – HPD Backplane..... 109
Figure 44: Base Radio – Front..... 110
Figure 45: 50–Pin System Connector Pin-Outs (Conventional)..... 114
Figure 46: 50–Pin System Connector Pin-Outs (Trunked 3600).....117
Figure 47: Wireline Port Pin-Outs.....118
Figure 48: Microphone Port Pin-Outs.....118
Figure 49: Speaker Port Pin-Outs..... 119
Figure 50: VoyenceControl Welcome Page..... 128
Figure 51: VoyenceControl Login Window..... 128
Figure 52: VoyenceControl Dashboard..... 129
Figure 53: SNMPv3 Security Level Option Prompt..... 133
Figure 54: CSS Login Banner.....134
Figure 55: CSS Login Banner.....136
Figure 56: SNMPv3 Passphrase Prompt.....142
Figure 57: Remote Access Configuration Tab.....148
Figure 58: Password Configuration Window..... 149
Figure 59: Preselector Tuning — VHF..... 162
Figure 60: Preselector Tuning — UHF..... 164
Figure 61: VHF Duplexer Tuning Setup..... 167
Figure 62: Test Equipment Set Up for Tuning VHF Duplexer Low Pass Resonator..... 168
Figure 63: Test Equipment Set Up for Tuning VHF Duplexer High Pass Resonator..... 169
Figure 64: Test Equipment Set Up for Tuning VHF Duplexer High Notch Loop Assemblies..... 170
Figure 65: Test Equipment Set Up for Tuning VHF Duplexer Low Notch Loop Assemblies.....171
Figure 66: Verifying VHF Duplexer Insertion Loss — Connecting Test Equipment..... 172
Figure 67: Verifying VHF Duplexer Insertion Loss — Connecting Duplexer Cable Assembly..... 173
Figure 68: Verifying VHF Duplexer Isolation — Connecting Test Equipment..... 174
Figure 69: Verifying VHF Duplexer Isolation — Connecting Duplexer Cable Assembly..... 175
Figure 70: UHF Duplexer Tuning Setup..... 176
Figure 71: Test Equipment Set Up for Tuning UHF Duplexer Low Pass Resonator.....177
Figure 72: Test Equipment Set Up for Tuning UHF Duplexer High Pass Resonator..... 178
Figure 73: Test Equipment Set Up for Tuning UHF Duplexer High Notch Loop Assemblies.....179
Figure 74: Test Equipment Set Up for Tuning UHF Duplexer Low Notch Loop Assemblies.....180

Figure 75: Verifying UHF Duplexer Insertion Loss — Connecting Test Equipment..... 181
Figure 76: Verify UHF Duplexer Insertion Loss — Connecting Duplexer Cable Assembly.....181
Figure 77: Verifying UHF Duplexer Isolation — Connecting Test Equipment..... 182
Figure 78: Verifying UHF Duplexer Isolation — Connecting Duplexer Cable Assembly 183
Figure 79: Metering Screen Window..... 185
Figure 80: Configuration for Modulation Fidelity Measurement (Aeroflex 2975 Series Service Monitor or Equivalent Analyzer)..... 195
Figure 81: Configuration for Modulation Fidelity Measurement (Aeroflex 2975 Series Service Monitor or Equivalent)..... 197
Figure 82: HPD Service Monitor Test Screen (Aeroflex 3900 Series Service Monitor).....198
Figure 83: HPD Service Monitor - RF Control Settings Window (Aeroflex 3900 Series Service Monitor)..... 201
Figure 84: CSS Test And Measurement Screen..... 202
Figure 85: HPD Service Monitor - Rx Meter Subscreen, Reset Soft Keys (Aeroflex 3900 Series Service Monitor)..... 202
Figure 86: HPD Service Monitor - RF Control Settings Window (Aeroflex 3900 Series Service Monitor)..... 204
Figure 87: Test And Measurement Screen.....205
Figure 88: HPD Service Monitor - Rx Meter Subscreen and Soft Keys (Aeroflex 3900 Series Service Monitor)..... 206
Figure 89: CSS Test And Measurement Screen..... 207
Figure 90: MOSCAD Network Fault Management – Example..... 217
Figure 91: GEN 1 Transceiver Module.....228
Figure 92: GEN 2 Transceiver Module.....228
Figure 93: GEN 1 Power Amplifier Module.....230
Figure 94: GEN 2 Power Amplifier Module.....230
Figure 95: Transceiver Module.....231
Figure 96: GTR 8000 Base Radio Modules 232
Figure 97: Fan Assembly 237
Figure 98: Power Supply..... 239
Figure 99: Power Supply Fan.....241
Figure 100: Power Amplifier Module..... 243
Figure 101: Captive Screws..... 243
Figure 102: GTR 8000 Power Amplifier RF Cable (Front).....244
Figure 103: GTR 8000 Base Radio Showing Connections to Backplane Through Backplane Cover..245
Figure 104: Fan Cable Connector..... 248
Figure 105: EMI Spring Panel Guide Rail Alignment.....249
Figure 106: Preselector Filter (700/800 MHz)..... 250
Figure 107: Preselector Filter (UHF)..... 250
Figure 108: Preselector Filter (VHF).....251
Figure 109: Transmit Filter (700/800 MHz).....252

Figure 110: External Dual Circulator/Isolator Tray (700/800 MHz).....254
Figure 111: External Dual Circulator/Isolator Tray (UHF).....255
Figure 112: Duplexer Module (700/800 MHz)..... 258
Figure 113: Duplexer Module (UHF)..... 259
Figure 114: Duplexer Module for IVD (VHF)..... 261
Figure 115: Transceiver LEDs (viewable through a drop-down door).....264
Figure 116: Transceiver Option Card Intercom LED (viewable behind the fan module)..... 267
Figure 117: Power Amplifier LEDs, viewable through a drop-down door.....268
Figure 118: Fan Module-Alarm LED (lower right corner).....269
Figure 119: Power Supply Module..... 269
Figure 120: T2-2R Receiver Mute Option Kit Wiring Diagram.....282
Figure 121: T3-3R Receiver Mute Option Kit Wiring Diagram.....284
Figure 122: T4-4R Receiver Mute Configuration.....286
Figure 123: T4-4R Splitter and Antenna Relay Tray..... 286
Figure 124: T4-4R Receiver Mute Option Kit Wiring Diagram.....287
Figure 125: Tn-nR Receiver Mute Option Kit Wiring Diagram.....290
Figure 126: CSS - WildCard Tables Example..... 293
Figure 127: T1-2R Talk-Around Option Kit Wiring Diagram..... 296
Figure 128: T2-2R with Duplexer and Triple Relay Configuration.....301
Figure 129: Triple Antenna Relay Tray.....302
Figure 130: T2-2R with Duplexer and Triple Relay Option Kit Wiring Diagram.....303

List of Tables

Table 1: Base Radio Modules and Function....30
Table 2: Standby Power Consumption....39
Table 3: GTR 8000 Base Radio General Specifications IV&D (700/800 MHz) 40
Table 4: GTR 8000 Base Radio Transmitter Specifications for IV&D (700/800 MHz) 42
Table 5: GTR 8000 Base Radio Specifications for IV&D (700/800 MHz) 43
Table 6: GTR 8000 Base Radio FCC Identification for IV&D (700/800 MHz) 44
Table 7: GTR 8000 Base Radio Industry Canada for IV&D (700/800 MHz)....44
Table 8: GTR 8000 Base Radio General Specifications for IV&D UHF R1 (380–435 MHz) 45
Table 9: GTR 8000 Base Radio Transmitter Specifications for IV&D UHF R1 (380–435 MHz)....46
Table 10: GTR 8000 Base Radio Specifications for IV&D UHF R1 (380–435 MHz)....47
Table 11: GTR 8000 Base Radio FCC Identification for IV&D UHF R1 (380–435 MHz)....48
Table 12: GTR 8000 Base Radio Industry Canada for IV&D (UHF R1 380–435 MHz)....48
Table 13: GTR 8000 Base Radio General Specifications for IV&D UHF R2 (435–524 MHz)....49
Table 14: GTR 8000 Base Radio Transmitter Specifications for IV&D UHF R2 (435–524 MHz)....50
Table 15: GTR 8000 Base Radio Specifications for IV&D UHF R2 (435–524 MHz)....51
Table 16: GTR 8000 Base Radio FCC Identification for IV&D UHF R2 (435–524 MHz)....52
Table 17: GTR 8000 Base Radio Industry Canada for IV&D (UHF R2 435–524 MHz)....52
Table 18: GTR 8000 Base Radio General Specifications for IV&D VHF (136–174 MHz)....52
Table 19: GTR 8000 Base Radio Transmitter Specifications for IV&D VHF (136–174 MHz)....54
Table 20: GTR 8000 Base Radio Specifications for IV&D VHF (136–174 MHz)....55
Table 21: GTR 8000 Base Radio FCC Identification for IV&D VHF (136–174 MHz)....56
Table 22: GTR 8000 Base Radio Industry Canada for IV&D (VHF 136–174 MHz)....56
Table 23: General Specifications for GTR 8000 Base Radio for HPD (700/800 MHz) 56
Table 24: Transmitter Specifications for GTR 8000 Base Radio for HPD (700/800 MHz) 57
Table 25: Receiver Specifications for GTR 8000 Base Radio for HPD (700/800 MHz) 57
Table 26: FCC Identification for GTR 8000 Base Radio for HPD (700/800 MHz)....58
Table 27: GTR 8000 Base Radio Industry Canada for HPD (700/800 MHz)....59
Table 28: General Specifications for GTR 8000 Base Radio Cabinet....59
Table 29: Transceiver Front RESET Switch Functions....63
Table 30: ON/OFF Switch - States for Power Supply and Battery Charger....69
Table 31: Power Supply Module Backplane Connections....70
Table 32: Activities for Site Preparation....86
Table 33: Heavy Gauge Wire Resistance Examples....91
Table 34: DC Power Connection Wire Gauge Maximum Distances for an IV and D Site....102
Table 35: Power Connection Wire Gauge Maximum Distances for HPD....102
Table 36: Base Radio Backplane Connections for Integrated Voice and Data....106

Table 37: Base Radio Backplane Connections for HPD..... 109
Table 38: Transceiver Connections - Front..... 111
Table 39: 50–Pin System Connector Pin-Outs (Conventional)..... 112
Table 40: 50–Pin System Connector Pin-Outs (Trunked 3600)..... 115
Table 41: Wireline Port Pin-Outs..... 117
Table 42: Microphone Port Pin-Outs..... 118
Table 43: Speaker Port Pin-Outs..... 119
Table 44: V.24 Port Pin-Outs..... 119
Table 45: Quick-Connect RF Coaxial Adapters for GTR 8000 Base Radio Support..... 121
Table 46: Time and Frequency Inputs..... 157
Table 47: Deviation Standards for ASTRO 25 System Test Patterns..... 184
Table 48: Illegal Carrier Determination..... 211
Table 49: GTR 8000 Base Radio General Troubleshooting..... 212
Table 50: Base Radio Diagnostic Options in UEM..... 216
Table 51: Local Password and SNMPv3 Passphrase Troubleshooting..... 218
Table 52: GTR 8000 Base Radio Field Replaceable Units..... 222
Table 53: GTR 8000 Base Radio Field Replaceable Parts..... 223
Table 54: GTR 8000 Base Radio Cabinet Field Replacement Parts..... 225
Table 55: Individual Replaceable Parts on External Dual Circulator Tray..... 225
Table 56: GTR 8000 Base Radio Cables..... 225
Table 57: System Feature Exceptions..... 226
Table 58: Minimum Software Download Version Requirements..... 227
Table 59: Transceiver FRU Number Mappings..... 228
Table 60: Power Amplifier FRU Number Mappings..... 230
Table 61: Transceiver Status and Alarm LEDs..... 265
Table 62: Transceiver Ethernet Link Status LEDs..... 265
Table 63: Transceiver Application-Controlled LEDs..... 266
Table 64: Transceiver Services-Controlled LEDs..... 267
Table 65: Power Amplifier LEDs..... 268
Table 66: Power Supply LEDs..... 270
Table 67: Transmit Filter Specifications (700/800 MHz)..... 270
Table 68: Preselector Filter Specifications (700/800 MHz)..... 271
Table 69: Preselector Filter Specifications (UHF)..... 271
Table 70: Preselector Filter Specifications (VHF)..... 271
Table 71: Duplexer Specifications (700/800 MHz)..... 272
Table 72: Duplexer Specifications (UHF)..... 272
Table 73: Duplexer Specifications (VHF)..... 273
Table 74: External Dual Circulator Specifications (700/800 MHz)..... 273
Table 75: External Dual Circulator Specifications (UHF)..... 274

Table 76: External Dual Circulator Specifications (VHF).....274
Table 77: Antenna Relay Specifications.....275
Table 78: T2-2R Receiver Mute Option Kit Parts List.....282
Table 79: T3-3R Receiver Mute Option Kit Parts List.....284
Table 80: T4-4R Receiver Mute Option Kit Parts List.....287
Table 81: Total Transmit and Receive Attenuation for T2-2R, T3-3R, and T4-4R Receiver Mute..... 289
Table 82: Tn-nR Receiver Mute Option Kit Parts List.....290
Table 83: T1-2R with Talk-Around Option Kit Parts List.....296
Table 84: Total Transmit and Receive Attenuation for T1-2R with Talk-Around..... 297
Table 85: T2-2R with Duplexer and Triple Relay Option Kit Parts List.....304
Table 86: Total Transmit and Receive Attenuation for T2-2R with Duplexer and Triple Relay..... 305

List of Processes

Equipment Installation Process Overview 82
Installing Device Software Prerequisites 121
Installing Devices in the UNC 124
Discovering a Device in the UNC 132
CSS Initial Device Configuration 134
Setting CSS Configuration Parameters for the GTR 8000 Base Radio (Trunked Simulcast) 150
Setting CSS Configuration Parameters for the GTR 8000 Base Radio (Trunked Repeater) 151
Setting CSS Configuration Parameters for the GTR 8000 Base Radio (HPD) 151
Setting CSS Configuration Parameters for the GTR 8000 Base Radio (Conventional) 152
Configuring Centralized Authentication on Devices in VoyenceControl 154
Recovering the GTR 8000 Base Radio 276

List of Procedures

Configuring The Ethernet LAN Switch 34
Mounting Cabinets or Racks to a Floor 88
Lifting Cabinets Vertically 97
Removing/Replacing a Cabinet Door 98
Mounting the GTR 8000 Base Radio 100
Grounding the GTR 8000 Base Radio 105
Discovering a Device in the UNC 125
Loading Device OS Images to the UNC 126
Enabling FTP Service 127
Transferring and Installing the OS Image 127
Inspecting Device Properties for Transferred and Installed Software 130
Disabling FTP Service 131
Connecting Through a Serial Port Link 135
Setting the Device IP Address and Pairing Number in CSS 137
Setting the Serial Security Services in CSS 138
Resetting SNMPv3 User Credentials to Factory Defaults in CSS 139
Connecting Through an Ethernet Port Link 140
Setting the BR/CM Pairing Number in CSS 142
Setting the Date and Time in CSS 143
Changing SNMPv3 Configuration and User Credentials in CSS 143
Adding or Modifying an SNMPv3 User in CSS 146
Performing an SNMPv3 Connection Verification in CSS 146
Customizing the Login Banner in CSS 146
Setting the SWDL Transfer Mode in CSS 147
Setting the Local Password Configuration in CSS 149
Configuring Tx Power Values and Battery Type 153
Setting RMC System Gain 154
Calculating The VHF Alignment Frequency For a Single Receive Frequency 160
Calculating The VHF Alignment Frequency for Multiple Receive Frequencies 161
Preparing the Equipment for VHF Alignment 161
Tuning The VHF Preselector 161
Calculating The UHF Alignment Frequency For a Single Receive Frequency 163
Calculating the UHF Alignment Frequency for Multiple Receive Frequencies 163
Preparing the Equipment for UHF Alignment 164
Tuning The UHF Preselector 164
Setting Up for VHF Duplexer Tuning 167

Tuning VHF Duplexer Low Pass Resonators 168
Tuning VHF Duplexer High Pass Resonators 169
Tuning VHF Duplexer High Notch Loop Assemblies 170
Tuning VHF Duplexer Low Notch Loop Assemblies 171
Verifying VHF Duplexer Insertion Loss 173
Verifying VHF Duplexer Isolation 175
Checking VHF Duplexer After Tuning 176
Setting Up for UHF Duplexer Tuning 176
Tuning UHF Duplexer Low Pass Resonators 177
Tuning UHF Duplexer High Pass Resonators 178
Tuning UHF Duplexer High Notch Loop Assemblies 179
Tuning UHF Duplexer Low Notch Loop Assemblies 180
Verifying UHF Duplexer Insertion Loss 182
Verifying UHF Duplexer Isolation 183
Checking UHF Duplexer After Tuning 184
Monitoring the Power Supply Module 185
Verifying Receiver Performance for FDMA Operation 185
Verifying Receiver Performance in TTA Operation 187
Verifying Receiver Performance (Analog Operation) 190
Checking Receiver Sensitivity (Self-Test Method) (IV and D) 192
Monitoring the Transmitter Metering Points 193
Verifying Transmitter Performance (Digital Operation) 193
Verifying Transmitter Performance (Analog Operation) 195
Setting Up the HPD Service Monitor for Testing the Base Radio 198
Performing In-band Power Meter User Calibration 199
Measuring HPD Base Radio Tx Power, Frequency Accuracy, and Tx EVM 200
Measuring HPD Base Radio Rx Sensitivity and Rx BER 203
Checking Receiver Sensitivity (Self-test Method) (HPD) 206
Replacing a Transceiver Module 231
Replacing the Fan Assembly 237
Replacing a Power Supply 238
Replacing a Power Supply Fan 240
Replacing a Power Amplifier 242
Replacing a GTR 8000 Base Radio Backplane 245
Replacing a Preselector Filter 250
Replacing Transmit Filters (700/800 MHz) 251
Replacing the Dual Circulator/Isolator Modules 253
Replacing a Duplexer (700/800 MHz) 257
Replacing a Duplexer (UHF) 259

Replacing a Duplexer (VHF) 261
Replacing an Antenna Relay 262
Performing a Site Download With PSC 9600 Site Controllers 276
Performing a Site Software Download With GCP 8000 Site Controllers 278
Installing the T2-2R, T3-3R, and T4-4R Receiver Mute Option Kits 291
Configuring the T2-2R, T3-3R, and T4-4R Receiver Mute Option Kits 292
Installing the T1-2R with Talk-Around Option Kit 298
Configuring the T1-2R with Talk-Around Option Kit 299
Installing the T2-2R with Duplexer and Triple Relay Option Kit 306
Configuring the T2-2R with Duplexer and Triple Relay Option Kit 307

About GTR 8000 Base Radio

This manual provides descriptive and procedural information on the GTR 8000 Base Radio. Included in the manual are descriptions of the components of the GTR 8000 Base Radio and their function, specifications for the various configurations, and procedures on installation, configuration, optimization, operation, troubleshooting, and FRU/FRE replacement. Finally, a reference section provides information on LED indicators and RFDS equipment specifications.

This manual is intended for technicians and system operators as a resource for understanding and installing the GTR 8000 Base Radio. The manual should be used with the ASTRO® 25 system documentation and the Motorola Solutions *Standards and Guidelines for Communication Sites* manual.

What Is Covered In This Manual?

This manual contains the following chapters:

- GTR 8000 Base Radio Description on page 29 provides a high-level description of the GTR 8000 Base Radio and the function it serves on your system.
- GTR 8000 Base Radio Theory of Operation on page 61 explains how the GTR 8000 Base Radio works in the context of your system.
- GTR 8000 Base Radio Installation on page 82 details installation procedures relating to the GTR 8000 Base Radio.
- GTR 8000 Base Radio Configuration on page 132 details configuration procedures relating to the GTR 8000 Base Radio.
- GTR 8000 Base Radio Optimization on page 156 contains optimization procedures and recommended settings relating to the GTR 8000 Base Radio.
- GTR 8000 Base Radio Maintenance on page 208 describes periodic maintenance procedures relating to the GTR 8000 Base Radio.
- GTR 8000 Base Radio Operation on page 209 details tasks to perform once the GTR 8000 Base Radio is installed and operational on your system.
- GTR 8000 Base Radio Troubleshooting on page 212 provides fault management and troubleshooting information relating to the GTR 8000 Base Radio.
- GTR 8000 Base Radio FRU Procedures on page 222 lists the Field Replaceable Units (FRUs) and Field Replaceable Entities (FREs) and includes replacement procedures applicable to the GTR 8000 Base Radio.
- GTR 8000 Base Radio Reference on page 264 contains supplemental reference information relating to the GTR 8000 Base Radio indicator LEDs.
- GTR 8000 Base Radio Disaster Recovery on page 276 provides references and information that enables recovery of a GTR 8000 Base Radio in the event of failure.
- Conventional GTR 8000 Base Radio Option Kits on page 281 provides the option kits that are available for the conventional GTR 8000 Base Radio.

Helpful Background Information

Motorola Solutions offers various courses designed to assist in learning about the system. For information, go to http://www.motorolasolutions.com/training to view the current course offerings and technology paths.

Related Information

In addition to the information in the table, see the Related Information Guide.

Related Information	Purpose
Standards and Guidelines for Communication Sites	Provides standards and guidelines that should be followed when setting up a Motorola Solutions communications site. This may be purchased on CD 9880384V83, by calling the North America Parts Organization at 800–422–4210 or the international number at 302–444–9842.
System Overview and Documentation	Provides an overview of the ASTRO® 25 new system features, documentation set, technical illustrations, and system-level disaster recovery that support the ASTRO® 25 radio communication system.
Dynamic System Resilience Feature Guide	Provides all the information required to understand, operate, maintain, and troubleshoot the Dynamic System Resilience feature.
Conventional Operations	Provides the information required to understand and operate the conventional GTR 8000 Base Radio in a Centralized or Distributed Conventional Architecture.
Conventional QUANTAR Replacement Guide	Provides instructions for replacing conventional QUANTARs® with conventional analog, digital and mixed mode GTR 8000 base radios. Also provides detailed comparisons of the devices.
Trunked IP Simulcast Subsystem Remote Site *HPD Standalone System - Infrastructure* *Repeater Site Infrastructure Reference Guide*	Provides the information required to understand and operate the GTR 8000 Base Radio in an ASTRO® 25 trunked site.
Quick Guide for Replacing a Trunked 3600 QUANTAR with a GTR 8000 Base Radio	Provides instructions for replacing trunked 3600 QUANTARs® with GTR 8000 base radios and GTR 8000 Expandable Site Subsystem. Also provides detailed comparisons of the devices.

Chapter 1

GTR 8000 Base Radio Description

This chapter provides a high-level description of the GTR 8000 Base Radio and the function it serves in your system.

1.1 Introduction

Figure 1: GTR 8000 Base Radio

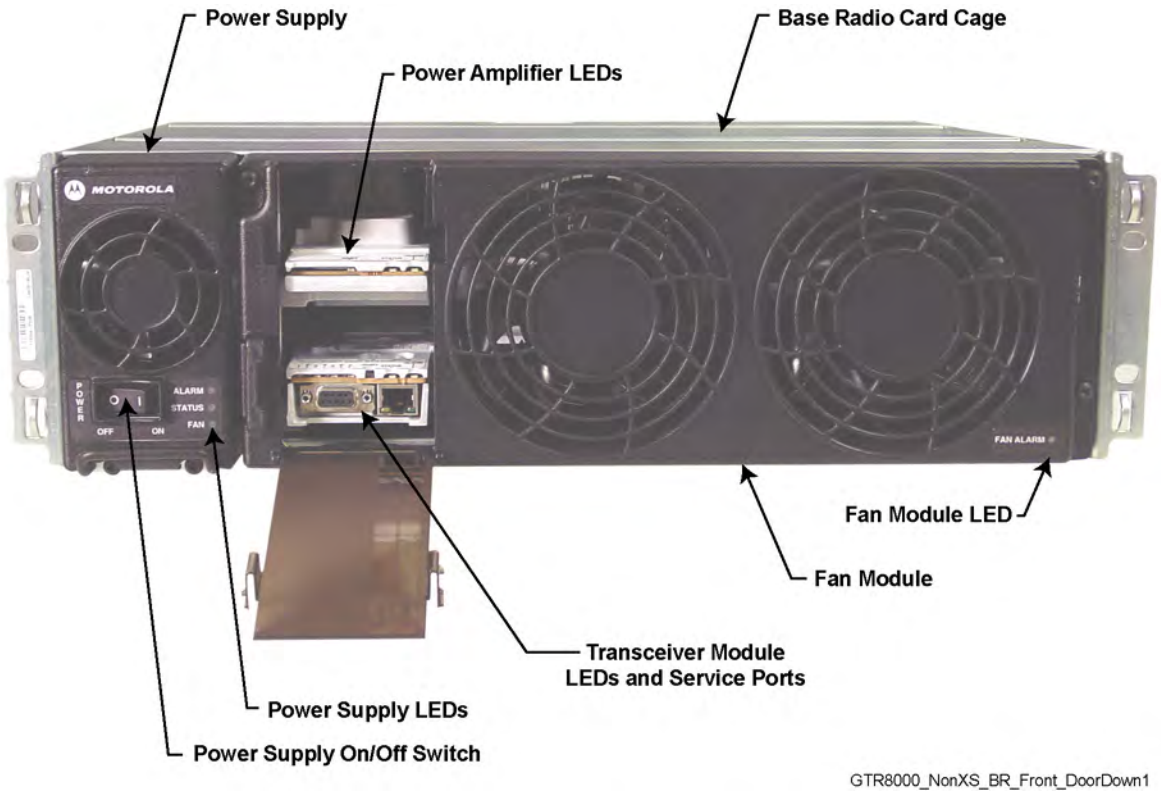

This manual provides information on the standalone GTR 8000 Base Radio and associated applications. The term base radio or BR is used to denote the transceiver and associated modules. As viewed in these instances, one base radio is a standalone configuration.

A GTR 8000 Base Radio consists of a transceiver module, power amplifier module, fan module, and power supply. The transceiver module includes the functionality for the exciter, receiver, and station control with an optional transceiver option card. The base radio software, configuration, and network management, as well as inbound/outbound traffic handling, are performed through the transceiver module. On-board serial and Ethernet service ports are on this module for local servicing through CSS. The power amplifier module amplifies the low-level modulated RF signal from the transceiver module and delivers the amplified signal on the path to the transmit antenna. The power supply module supports the transceiver and power amplifier modules. Radio Frequency Distribution System (RFDS) provides the interface between the transceivers and the site antennas and between the power amplifier and the site antennas.

1.2 GTR 8000 Base Radio Components

Table 1: Base Radio Modules and Function

Base Radio	Description
Power Supply	Operates from either an AC or DC input and provides the DC operating voltage for the base radio. May also provide a separate battery charger to maintain the charge on a 48 VDC nominal system, positive or negative ground.
Power Amplifier (PA)	Accepts a low-level modulated RF signal from the transceiver module and amplifies it for transmission through the site transmit antenna. Also provides a low-level RF feedback signal to the transceiver module to achieve the required transmitter linearity. Also performs functions related to the fan module.
Transceiver (XCVR)	Provides the control, exciter, and receiver functions for the base radio.
Transceiver Option Card	An optional board that attaches to the control board of the transceiver. Provides an internal 10 MHz frequency reference. For conventional base radio operation, it also provides the analog interfaces and WildCard I/Os. The transceiver option card is available in two categories: • OCXO (Oven Controlled Crystal Oscillator) • TCXO (Temperature Compensated Crystal Oscillator) **NOTICE:** The OCXO board when initially powered on takes a few minutes to reach its operational temperature. During the warm-up period, if the base radio is configured to use the OCXO frequency reference, the base radio may report a frequency reference failure. This alarm condition automatically clears once the OCXO board has warmed up sufficiently to provide a stable reference.
Fan	Provides intermittent forced air cooling for the power amplifier and transceiver modules.

1.3 Supported System Configurations

The GTR 8000 Base Radio is available in the following system architectures:

- High Performance Data (HPD)
- Trunked IP Simulcast Subsystems (IV&D)
- ASTRO® 25 Repeater Site
- Trunked Single-Site Repeater Configuration (IV&D)
- Centralized Conventional Architectures
- Distributed Conventional (Subsystem) Architecture

- ASTRO® 3.1 Conventional System
- Analog and/or Digital Conventional, Trunked or Mixed-Mode Systems
- Trunked 3600 SmartZone® Systems

1.3.1
Supported Frequencies for Trunked IV and D and Conventional Architectures

The GTR 8000 Base Radio is available in the following frequency bands:

- 700, 800 MHz (700 MHz analog conventional is not available within the U.S.A. or Canada)
- UHF R1 (380–435 MHz)
- UHF R2 (435–524 MHz)
- VHF (136–174 MHz)

NOTICE: RF Distribution Functionality (RFDS) information provided in this documentation pertains to the RFDS equipment supplied by Motorola Solutions.

1.3.2
Supported Frequencies for HPD

The GTR 8000 Base Radio is available for 25 kHz operation in the following frequency bands:

- 700 MHz
- 800 MHz

1.4
Overview For a GTR 8000 Base Radio in a Trunked IP Simulcast Subsystem

The base radio captures inbound signals through external receive (Rx) antennas from the subscriber/mobile radios and then amplifies, filters, and demodulates the signals into voice packets which are forwarded to a comparator. The comparator processes the received voice packets for a particular call and forwards the best quality voice packets to the zone core, which routes them to the associated base radio at each remote site. At a predetermined time, all base radios transmit the voice packets simultaneously on the same frequency to complete the communication.

A maximum of 30 base radios can be installed per remote site. Each base radio has an Ethernet connection to a switch at the site for the Network Management interface.

1.5
Overview For a GTR 8000 Base Radio in an ASTRO 25 Repeater Site

The base radios in an ASTRO® 25 repeater site are set up in a single trunked site, with one active control channel and a number of voice channels at the site. If packet data services are supported at the site, a number of voice channels can be configured with packet data channel capability. Voice traffic is routed from each of the base radios to the system for distribution to other sites and is repeated by the base radios to support other local subscribers. However, data traffic is routed to the GCP 8000 Site Controller. The site controller routes these packets upstream to the zone core for further processing and routing.

A maximum of 28 base radios can be installed at the site. Each base radio has either an Ethernet connection to a site LAN switch or an Ethernet connection to both site controllers at the site, depending on the site configuration. See the *Repeater Site Infrastructure Feature Guide* manual for details.

Besides the power supply module supporting the transceiver and power amplifier modules, the power supply can also provide auxiliary power to a connected site controller.

An ASTRO® 25 repeater site can also support a mix of GTR 8000 Base Radios and standalone 10Base-T Ethernet Epic IV or Epic VI QUANTAR® stations, or STR 3000 Base Radios.

If a mix of GTR 8000 Base Radios and QUANTAR® stations are at an ASTRO® 25 repeater site, SNMPv1 and clear SWDL support is used at the site.

1.6 Overview For a GTR 8000 Base Radio in a Trunked Single-Site Repeater Configuration

This configuration consists of standalone GTR 8000 Base Radios and standalone GCP 8000 Site Controllers in a single-site repeater configuration, or can be used in a multi-site system to provide a system migration step that enables replacement of PSC 9600 Site Controllers or base radios other than the GTR 8000 Base Radios. The base radios may be colocated with the site controllers, or be separated (non-colocated) from the site controllers.

NOTICE: This configuration can only be used in non-voting configurations.

Support is provided only for FDMA when the base radios are physically separated from and not colocated with the site controllers. TDMA requires the use of a frequency reference and timing reference that can only be provided through the CP3 links on the site controller, which cannot be extended to non-colocated base radios when the distance exceeds the noted limits. This configuration is supported only on repeater sites.

An Ethernet cable is used to extend the site controllers signal to the first non-colocated base radio through the site controllers Net AUX port into the base radios SC-A port. The site controllers Net AUX port must be enabled and configured using the CSS for 100/FULL (speed and duplex). When the distance between the site controllers and the first non-colocated base radio exceeds 328 ft (100 m), an external HP 2620 24-port Ethernet LAN switch must be used to extend the site controllers signal. When there are additional non-colocated base radios and those base radios are more than 328 ft (100 m) from the previous non-colocated base radio, additional Ethernet LAN switches are required to continue to extend the signal of the site controller. See Figure 2: Single-Site Repeater Configuration 1 on page 33.

Figure 2: Single-Site Repeater Configuration 1

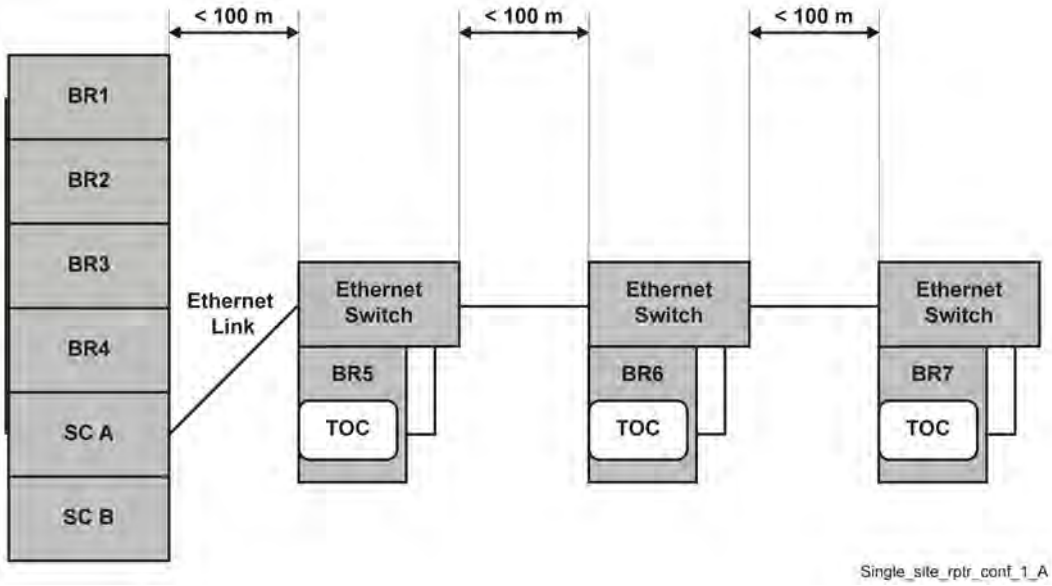

If the distance between the first non-colocated base radio and subsequent non-colocated base radios is less than 328 ft (100 m), a single Ethernet LAN switch can be used to distribute the site controllers call control signaling to those non-colocated base radios. The stated distance limit for a shielded twisted pair Ethernet cable (CAT5) is 328 ft (100 m) before the signal degrades too much to be used. See Figure 3: Single Site Repeater Configuration 2 on page 33.

Figure 3: Single Site Repeater Configuration 2

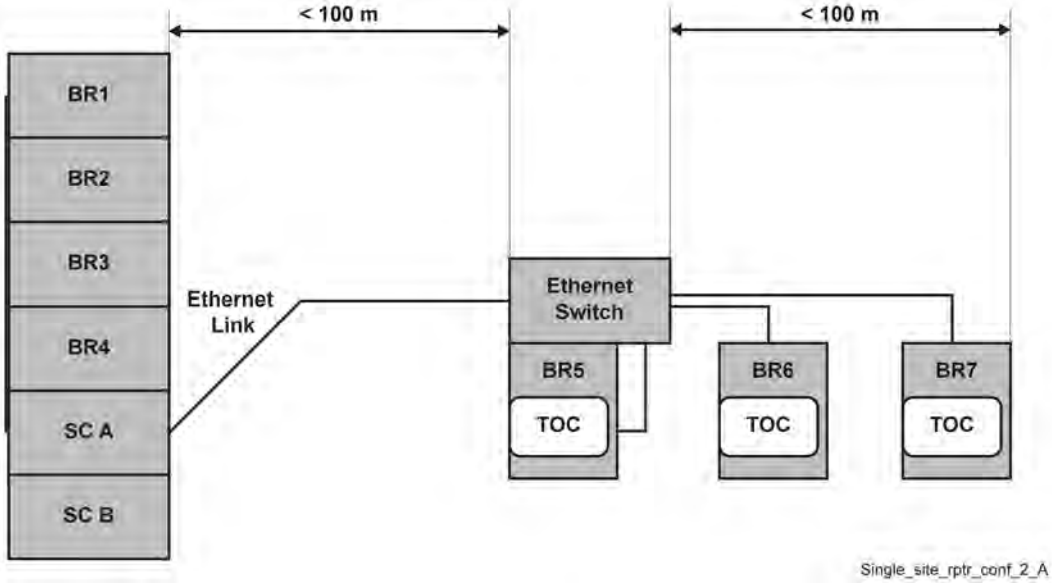

Once the site controller link is extended, the control plane could be open to access from elements other than the base radios. Each Ethernet LAN switch must be manually configured to provide MAC Port lockdown to make sure that only the proper devices can communicate with each other. MAC Port lockdown may also be applied on any unused Expansion Ports on the site controller. See the *MAC Port Lockdown* manual to lock down the site controller. The switch ports may be enabled or disabled according to specific security guidelines. See “Enabling/Disabling Ports on HP Switches Using Local Access” in the *System LAN Switches* manual.

Each non-colocated base radio is equipped with a transceiver option card, which provides an internal 10 MHz frequency reference. See the “Reference Oscillator Alignment Procedures” of the base radio Alignment Screens in the *Configuration/Service Software (CSS) Online Help* for alignment details. The base radios that are colocated with the site controllers do not require the transceiver option card.

When the Ethernet LAN switch is used in a configuration that does not include centralized network management, the switch must be programmed manually. See the *System LAN Switches* manual.

1.6.1
Configuring The Ethernet LAN Switch

When and where to use: Use this procedure to configure either an HP 2620 LAN switch for a Trunked Single-Site Repeater Configuration.

Procedure:

1. Enter the following commands at the prompt: `ProCurve Switch 2620-24#`
2. `ProCurve Switch 2620-24#erase startup-config`

   (This command removes any existing switch configuration)
3. `ProCurve Switch 2620-24#config`

   (This command puts the switch into configuration mode)
4. `ProCurve Switch 2620-24(config)#int X`

   (Using Port X as an example)
5. `ProCurve Switch 2620-24(eth-X)#speed-duplex 100-Full`

   (This command sets the interface X to 100MB/Full Duplex)
6. `ProCurve Switch 2620-24(eth-X)#write memory`

   (This command saves the configuration changes to persistent memory)

1.7
Overview For a GTR 8000 Base Radio in a High Performance Data (HPD) Subsystem

The GTR 8000 Base Radio provides the radio frequency (RF) link between the system site controller and the subscriber/mobile radios. The base radio captures inbound signals through external receive (Rx) antennas from the subscriber/mobile radios and then amplifies, filters, and demodulates the signals into data packets which are forwarded to the site controller. The site controller routes/receives digitized data payload to/from the Radio Network Gateway (RNG) for further processing and routing.

The site controller receives digitized data payload and control packets from the RNG and routes them to a specified base radio. The base radio extracts the control instructions from the packets and uses them for internal management such as channel frequency assignment. The base radio maps the digital data packets to discreet voltage levels which are then used to modulate an RF carrier. The modulated RF carrier is amplified and may be combined with other RF channels, filtered and routed to the transmission (Tx) antennas.

The first four base radios at the site are defined as home channel capable. Settings for the base radio are made through Unified Network Configurator (UNC) and Configuration/Service Software (CSS).

Besides the power supply module supporting the transceiver and power amplifier modules, it can also provide auxiliary power to a connected site controller or receive multicoupler/low noise amplifier (RMC/LNA).

The HPD base radio provides a full-duplex RF interface to HPD Mobile Subscriber Units (MSUs). The HPD base radios are available for 25 kHz HPD operation in the 700 MHz or 800 MHz bands. Up to five HPD base radios may be installed at the site. Each base radio has an Ethernet connection to both of the site controller modules at the site.

The HPD base radio uses Radio Link Adaptation (RLA) to provide high-speed, reliable, enhanced data performance when communicating traffic with MSUs. RLA uses adaptive modulation techniques, with slower, and more reliable modulation for control signaling and retries, and faster modulation methods when traffic is successfully being delivered between the base radio and MSUs.

The HPD base radio is implemented with 2X receiver diversity. This receiver diversity enhances the inbound signals from the MSUs on the channel.

Figure 4: GTR 8000 Base Radios in HPD Remote Site

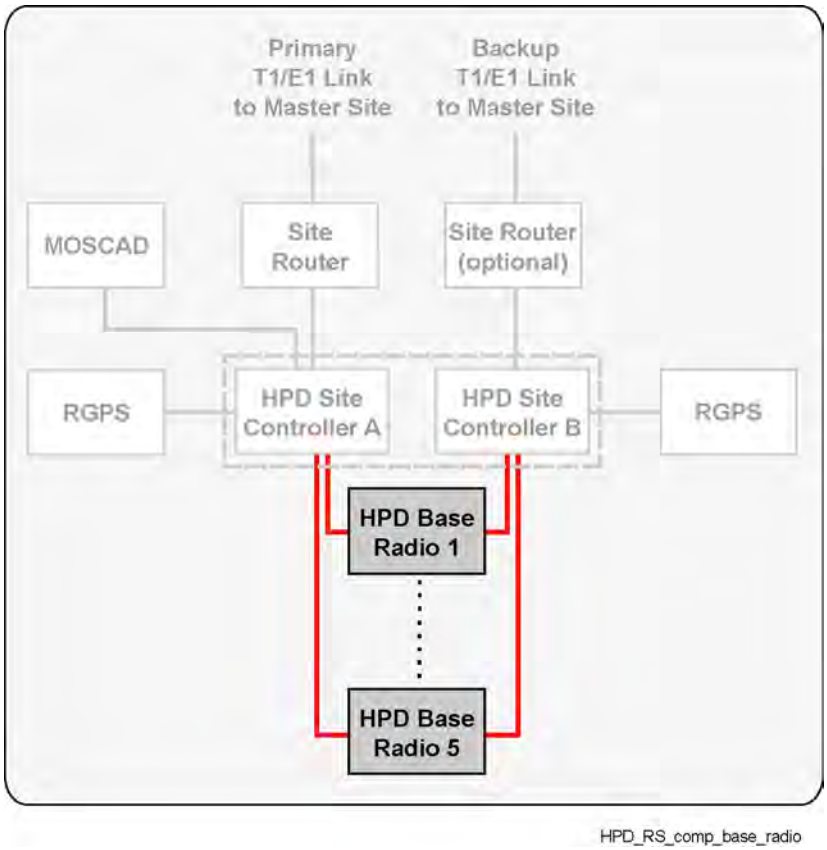

The HPD base radio uses Time Division Multiplex (TDM) frames for random access channels, reserved access channels, and broadcast messages. All carriers in the system are synchronized by a Global Positioning System (GPS) so that transmission slots are synchronized across sites. The base radio is able to schedule inbound/outbound traffic for half-duplex MSUs so that outbound traffic intended for the MSU does not conflict with inbound random or reserved access traffic from the MSU.

1.8 Overview for a GTR 8000 Base Radio in Conventional Architectures

Throughout this manual, the term “conventional” addresses either an analog only base radio or an ASTRO® 25 Conventional base radio that operates in either digital mode or mixed (analog/digital) mode. Conventional base radios operate within:

- An analog only infrastructure

- A Centralized or Distributed Conventional Architecture, or
- An ASTRO® 3.1 Conventional System.

Each conventional base radio uses either:

- A 2- or 4-wire TRC or 4-wire E&M interface in an analog infrastructure
- A V.24 interface for digital voice and data traffic to either a Channel Bank, Digital Interface Unit, Conventional Channel Gateway (CCGW), MLC 8000, or link converter, ASTRO-TAC 3000 Comparator, and an optional 4-wire link for analog voice in a mixed mode configuration
- An IP interface for digital voice and data traffic to a CCGW or GCM 8000 Comparator.

NOTICE: For information about conventional functions and topologies the base radio supports, see the *Conventional Operations* manual. The device can be IP managed while using the 4-wire/V.24 interface for channel traffic.

NOTICE: A base radio can be implemented as a QUANTAR® replacement within an ASTRO® 3.1 conventional system. The implementation details can be found in the *Conventional QUANTAR Replacement Guide* manual.

1.8.1
ASTRO 25 Conventional Base Radio

ASTRO® 25 Conventional base radio features include:

- Separate Tx and Rx network access code
- Console or repeat priority
- Repeater set-up knockdown from the console
- Voice and data
- Control Messages (TSBK)
- Standalone repeater
- Control station
- Receive-only station
- Voting
- Multicast
- Simulcast
- Console Control
  - Monitor Mode
  - Repeat Control
  - Frequency Select
- WildCard Operation
- Multi-Channel – up to 16 channels with base station or repeater functionality
- Multiple Network Access Code (Multi-NAC) Operation
- Scan Operation
- Analog Phone Patch
- 4-wire and V.24 connections to a DIU or an ASTRO-TAC 3000 Comparator using the same V.24 connector pin-outs as a QUANTAR® station

An ASTRO® 25 Conventional base radio can be used in the following architectures:

- ASTRO® 3.1 Conventional Systems
- Centralized Conventional Architectures
  - Zone Core with Colocated Conventional Channels
  - Trunked IP Simulcast Remote Site with Conventional Channels
  - Dispatch Console Site with Colocated Conventional Channels
  - Conventional-Only Remote Site
  - HPD Site with Conventional Channels
- Distributed Conventional (Subsystem) Architectures
  - Conventional Base Radio Sites
  - Conventional Hub Sites

1.8.2 Analog Conventional Base Radio

Analog conventional base radio features include:

- 12.5 kHz channel operation on all bands; 25 kHz channel operation for UHF T-Band and 800 MHz
- HearClear capability for 800 MHz
- Repeater Access Control
- Multi-Channel – up to 16 channel with base station or repeater functionality
- Alarm tones over-the-air and over-the-wireline
- Transmit Antenna Relay Control and Simplex Operation
- WildCard Operation
- E&M Interface; Ext PTT keying and COR receiver I/O
- Analog simulcast support using Gen Tx and PL Analog inputs and Ext PTT and Ext PTT keying
- 2-wire or 4-wire connection to console or Comparator
- Multi-PL receive operation
- RA/RT configuration with analog 4-wire connections
- Analog Wireline Automatic Level Control (ALC)
- Wideband Receiver Operation
- Telephone Interconnect
- PL/DPL
- Tone Remote Control (TRC)
- Fall Back In-Cabinet Repeat (Automatic Mode)*
- In-Cabinet Repeat (External Mode)*
- Control Station
- Interfaces for a local microphone and speaker
- Simplex operation
- Scan Operation
- Voting
- Multicast

- Simulcast
- Console Control
  - Monitor Mode
  - Repeat Control
  - Frequency Select

* For detailed information on the differences between the automatic **Fallback In-Cabinet Repeat** and the externally wired **In-Cabinet Repeat** functions, see the *Conventional Operations* manual.

An analog conventional base radio can be used in the following architectures:

- ASTRO® 3.1 Conventional Systems
- Centralized Conventional Architectures
  - Zone Core with Colocated Conventional Channels
  - Trunked IP Simulcast Remote Site Conventional Channels
  - Dispatch Console Site with Colocated Conventional Channels
  - Conventional-Only Remote Site
- Distributed Conventional (Subsystem) Architectures
  - Conventional Base Radio Sites
  - Conventional Hub Sites

1.9 Overview of a GTR 8000 Base Radio in a Trunked 3600 System

In a trunked 3600 system, the GTR 8000 Base Radio control channel runs at 3600 bps, and the voice channels can be configured for analog or ASTRO® 25 voice operation.

The base radio can be used in the following trunked 3600 SmartZone® systems:

- Trunked SmartX – 6809/MTC 3600 Site Controller Simulcast Subsystem

Depending on the system capabilities, each base radio can be configured for analog voice (4-wire interface), digital voice (V.24 interface) or mixed-mode (4-wire and V.24 interfaces). These interfaces connect to either a channel bank or ASTRO-TAC 3000 Comparator.

The base radio is available in the following frequency bands:

- 800 MHz
- UHF R1 (380–435 MHz)
- UHF R2 (435–524 MHz)
- VHF (136–174 MHz)

NOTICE: A GTR 8000 Base Radio can be implemented as a QUANTAR® replacement within a trunked 3600 SmartZone® system. The implementation details can be found in the *Quick Guide for Replacing a Trunked 3600 QUANTAR with a GTR 8000 Base Radio* manual.

1.10 Power Efficiency Package

The GTR 8000 Base Radio is available in a Power Efficiency Package, which provides low standby power consumption (see Table 2: Standby Power Consumption on page 39) functionality for ASTRO® 25 Conventional base radios and trunked base radios operating in the UHF-R1 and UHF-R2 frequency bands. The Power Efficiency Package optimizes the power consumption for supported base radios for the use of power generated from alternate energy sources such as solar or wind.

The Power Efficiency Package hardware includes a modified transceiver, power amplifier, power supply, fan, and optional transceiver option card (internal reference) along with additional software configurations through Configuration/Service Software (CSS).

The following conditions must be met to obtain a power consumption of less than or equal to 35 W:

- DC source only
- Speaker turned OFF (if equipped with a transceiver option card)
- No activation of Aux Out Relays (if equipped with a transceiver option card)
- No 29 V AUX loads. For example: active draws by a site controller
- CSS configured for applications not requiring receiver diversity
- CSS Fan Holdover configured to “short” (length of time the fan stays ON after transmission)
- Ambient temperature of 104 °F (40 °C) or less (single fan operation – disabling one of the fans within the fan module. See Replacing the Fan Assembly on page 237 in the Field-Replaceable Unit (FRU) Procedures chapter for instructions on how to disable the fan.)

  NOTICE: To validate the 35 W standby power consumption specification, wait for the main fans to turn off after the transmitter dekeys. The turn off delay of the main fans is controlled by the fan holdover configuration in the CSS. Single fan operation requires the Tx Power Out in the CSS to be limited to 50 W.

- Transceiver, power amplifier, power supply, fan, and TCXO transceiver option card (internal reference) are all power efficiency package versions

NOTICE: The TCXO transceiver option card is available only for non-simulcast conventional systems. The OCXO transceiver option card is available for trunked or simulcast systems, but does not guarantee 35 W.

Table 2: Standby Power Consumption

	Conventional Non- Simulcast	Conventional Simulcast	Trunked Non-Simulcast	Trunked Simulcast
Internal Reference Capable	35 W	45 W	35 W	45 W
Not Internal Reference Capable	35 W	35 W	35 W	35 W

1.11 License Auditing

License auditing for ASTRO® 25 G-series devices at M and L core systems can be enabled through the License Manager to ensure that site licenses have been purchased and also to prevent the transfer of site licenses across systems.

The License Manager performs the following functions:

- Monitors the number of site devices in use within the system.
- Audits the number of active licenses.
- Displays a noncompliance notification on the Unified Event Manager (UEM) when the number of devices exceeds the licenses.

If a site license is not present, the following functions do not occur:

- Send or receive audio

- Vote audio
- Implement site control functions; such as assigning channels or calls.

Any issues with an existing site license are sent to the UEM without system functionality being restricted.

1.12 GTR 8000 Base Radio Specifications

The following G-Series Product Specifications references the TIA specifications for the base radio. This includes the following Methods and Performance recommendations:

Phase 1 (includes Linear Simulcast):

- Methods: TIA-102.CAAA-C, “Digital C4FM/CQPSK Transceiver Measurements Methods” September 2008
- Performance: TIA-102.CAB-C, “Land Mobile Radio Transceiver Performance Recommendations, Project 25 – Digital Radio Technology, C4FM/CQPSK Modulation” January 2010

Phase 2:

- Methods: TIA-102.CCAA, “Two-Slot Time Division Multiple Access Transceiver Measurement Methods” August 2011
- Performance: TIA 102.CCAB, “Two-Slot Time Division Multiple Access Transceiver Performance Recommendations” October 2011

IMPORTANT: Specifications are subject to change without notice.

1.12.1 GTR 8000 Base Radio Specifications for Integrated Voice and Data (700/800 MHz)

Table 3: GTR 8000 Base Radio General Specifications IV&D (700/800 MHz)

General Specifications	
Model Number	T7039A
Number of Channels (trunked)	1
Number of Channels (conventional)	16
Size (H x W x D)	133mm x 483mm x 457mm (5.25" x 19" x 18")
Weight (Mid-Power)	21 kg (46 lbs)
Weight (High-Power)	22 kg (48 lbs)
Temperature Range	
Operating:	-30 to 60 °C (-22 to 140 °F)
Storage:	-40 to 85 °C (-40 to 185 °F)
Operating Altitude	Up to 1800 meters (5900 ft) above mean sea level Above 1800 meters (5900 ft), the derating is 1.5 °C/km (0.8 °F/1000 ft)

General Specifications		
		Above 3000 meters (9800 ft), the peak power derating for the Tx filter is 1 dB/1km (0.3 dB/ 1000 ft) Maximum operational altitude is 5000 meters (16900 ft)
Power Requirements		AC: 90-264 VAC, 47-63 Hz DC: 43.2-60 VDC
Power Consumption Transmitting – Low Power (2–30W)		
	AC:	C4FM, FM: 200W max., 700/800 MHz H-DQPSK, LSM: 195W max., 700/800 MHz
	DC:	C4FM, FM: 185 W max., 700/800 MHz H-DQPSK, LSM: 195W max., 700/800 MHz
Power Consumption Transmitting – Mid Power (2–100 W)		
	AC:	C4FM, FM: 470 W max., 700/800 MHz H-DQPSK, LSM: 530 W max., 700/800 MHz
	DC:	C4FM, FM: 430 W max., 700/800 MHz H-DQPSK, LSM: 490 W max., 700/800 MHz
Power Consumption Transmitting – High Power (15–150 W)		
	AC:	C4FM, FM: 725 W max., 800 MHz
	DC:	C4FM, FM: 700 W max., 800 MHz
Power Consumption (Standby)		
	AC:	110 W max.
	DC:	75 W max.
Channel Spacing		12.5/25 kHz
Power Supply Type		Switching
Battery Revert		Included
Input/Output Impedance		50 Ohms
Antenna Connector Types		
	Tx:	N female
	Rx:	BNC female without preselector N female with preselector
Frequency Stability Internal Reference (transceiver option card)		Aging: 30 ppb/yr 100 ppb/5yr Temperature: 40 ppb
Frequency Stability External Reference		TRAK

General Specifications	
Frequency Generation	Synthesized

Table 4: GTR 8000 Base Radio Transmitter Specifications for IV&D (700/800 MHz)

Transmitter Specifications	
Frequency Range	769-775, 775-776, 851–870 MHz
Power Output* (Low-Power, 700/800 MHz)	2-30 W
Power Output* (Mid-Power, 700/800 MHz)	2-100 W
Power Output* (High-Power, 800 MHz)	15-150 W
Electronic Bandwidth	Full Bandwidth
Modulation (Mid-Power, 700/800 MHz)	C4FM, LSM, H-DQPSK, FM
Modulation (High-Power, 800 MHz)	FM, C4FM
Modulation Fidelity	5%
Spurious and Harmonic Emissions Attenuation	90 dB
Analog FM Hum and Noise	
12.5 kHz:	45 dB
25 kHz:	50 dB
Analog Audio Distortion	Less than 2% at 1000 Hz
Emission Designators (Low-Power, 700/800 MHz)	**700MHz, 30W** 8K70D1E, 8K70D1D, 8K70D1W, 8K10F1E, 8K10F1D, 8K10F1W, 9K80D7E, 9K80D7D, 9K80D7W **800MHz, 30 W:** 8K70D1E, 8K70D1D, 8K70D1W, 8K10F1E, 8K10F1D, 8K10F1W, 10K0F1E, 10K0F1D, 10K0F1W, 9K80D7E, 9K80D7D, 9K80D7W, 17K7D7D, 16K0F1D, 16K0F3E, 11K0F3E, 14K0F1D, 14K0F3E
Emission Designators (Mid-Power, 700/800 MHz)	8K70D1E, 8K70D1D, 8K70D1W 8K10F1E, 8K10F1D, 8K10F1W 9K80D7E, 9K80D7D, 9K80D7W 10K0F1E, 10K0F1D **800 W only:** 10K0F1W, 16K0F1D, 16K0F3E, 11K0F3E, 14K0F1D, 14K0F3E
Emission Designator (High-Power, 800 MHz)	8K10F1E, 8K10F1D, 8K10F1W, 16K0F1D, 16K0F3E, 11K0F3E, 14K0F10, 14K0F3E, 10K0F1E, 10K0F1E, 10K0F1W
Adjacent Channel Power Ratio	
12.5 kHz offset, 6 kHz BW:	67 dB
Tx Noise in Rx Band	-145 dBc/Hz

Transmitter Specifications	
Intermodulation Attenuation (High-Power, 800 MHz)	55 dB
Intermodulation Attenuation (Mid-Power, 700/800 MHz)	80 dB

*Full transmitter output power is available during battery revert.

NOTICE: The output power reference plane is the output connector of the power amplifier. The loss of the transmitter output cable (PA output to back of base radio) is 4% at 800 MHz. However, the base radio software allows the transmitter output power to be set at 10% above rated value.

Table 5: GTR 8000 Base Radio Specifications for IV&D (700/800 MHz)

Receiver Specifications	
Frequency Range	792–825 MHz
Modulation	C4FM, H-CPM, FM
Analog Sensitivity (12 dB SINAD)	
12.5 kHz:	-118 dBm
25 kHz:	-117 dBm
Digital Sensitivity 5% Bit Error Rate Static (BER)	
C4FM:	-118 dBm
H-CPM:	-116 dBm
Faded Sensitivity 5% Bit Error Rate (BER)	
C4FM:	-110 dBm
Intermodulation Rejection	85 dB
Digital Adjacent Channel Rejection	60 dB
Analog Adjacent Channel Rejection (EIA603) Analog 12.5 kHz	75 dB
Analog Adjacent Channel Rejection (TIA603D)	
Analog 12.5 kHz:	50 or 60 dB (adjustable)
Analog 25 kHz:	80 dB
Spurious and Image Response Rejection	85 dB 100 dB with preselector
Analog Audio Response	+1, -3 dB from 6 dB per octave de-emphasis; 300–3000 Hz referenced to 1000 Hz at line output
Analog Audio Distortion	3% or 5% (adjustable)
Analog FM Hum and Noise	
12.5 kHz:	45 dB
25 kHz:	50 dB

Receiver Specifications		
Signal Displacement Bandwidth		1 kHz
Intermediate Frequencies		
	1st:	73.35 MHz
	2nd:	2.16 MHz
Electronic Bandwidth		Full Bandwidth
Blocking Immunity		100 dB
Conducted Spurious		-57 dBm
Bit Error Rate Floor		0.01%

Table 6: GTR 8000 Base Radio FCC Identification for IV&D (700/800 MHz)

FCC Identification			
Frequency Range	Type	Power Output	Type Acceptance Number
769–775, 775–776 MHz	Transmitter	2-100 W	ABZ89FC5812B
851–870 MHz	Transmitter	2-100 W	ABZ89FC5810B
851–870 MHz	Transmitter	15-150 W	ABZ89FC5825B
794–825 MHz	Receiver	N/A	ABZ89FR5811B
851-870 MHz	Transmitter	2-30W	ABZ89FC5829
769-775 MHz, 775-776 MHz	Transmitter	2-30W	ABZ89FC5831

1.12.1.1
GTR 8000 Base Radio Industry Canada for Integrated Voice and Date (700/800 MHz)

Table 7: GTR 8000 Base Radio Industry Canada for IV&D (700/800 MHz)

IC Approval Number	Frequency Range	Type	Power Output	IC Model Number
109AB-5810 B	Tx 851–869 MHz, Rx 806–824 MHz	LSM	Variable 2-100 Watts (average)	T7039-800B
109AB-5810 B	Tx 851–869 MHz, Rx 806–824 MHz	C4FM, FM	Variable 2-100 Watts	T7039-800B
109AB-5812 B	Tx 768–776 MHz, Rx 798–806 MHz	LSM	Variable 2-100 Watts (average)	T7039-700B
109AB-5812 B	Tx 768–776 MHz, Rx 798–806 MHz	C4FM, FM	Variable 2-100 Watts	T7039-700B
109AB-5825 B	Tx 851–869 MHz, Rx 806–824 MHz	C4FM, FM	Variable 15–150 W	T7039-8001 50B
109AB-5829	Tx 851–869 MHz, Rx 806–824 MHz	LSM	Variable 2-30W	GTR8000-80 030W

IC Approval Number	Frequency Range	Type	Power Output	IC Model Number
109AB-5829	Tx 851–869 MHz, Rx 806–824 MHz	C4FM, FM	Variable 2-30W	GTR8000-80 030W
109AB-5831	Tx 768–776 MHz, Rx 798–806MHz	LSM	Variable 2-30W	GTR8000-70 030W
109AB-5831	Tx 768–776 MHz, Rx 798–806MHz	C4FM, FM	Variable 2-30W	GTR8000-70 030W

1.12.2

GTR 8000 Base Radio Specifications for Integrated Voice and Data UHF R1 (380–435 MHz)

Table 8: GTR 8000 Base Radio General Specifications for IV&D UHF R1 (380–435 MHz)

General Specifications	
Model Number	T7039A
Number of Channels (trunked)	1
Number of Channels (conventional)	16
Size (H x W x D)	133mm x 483mm x 457mm (5.25" x 19" x 18")
Weight	21 kg (46 lbs)
Temperature Range	
Operating:	-30 to 60 °C (-22 to 140 °F)
Storage:	-40 to 85 °C (-40 to 185 °F)
Operating Altitude	Up to 1800 meters (5900 ft) above mean sea level Above 1800 meters (5900 ft), the derating is 1.5 °C/km (0.8 °F/1000 ft) Maximum operational altitude is 5000 meters (16900 ft)
Power Requirements	AC: 90-264 VAC, 47-63 Hz DC: 43.2-60 VDC
Power Consumption (Transmitting)	
AC:	C4FM, FM: 500 W max. H-DQPSK, LSM: 550 W max.
DC:	C4FM, FM: 460 W max. H-DQPSK, LSM: 510 W max.
Power Consumption (Standby)	
AC:	110 W max.
DC:	75 W max.
Power Consumption (Standby with Power Efficiency Package)	

General Specifications	
AC:	70 W
DC:	35 W
Channel Spacing	12.5/25 kHz
Power Supply Type	Switching
Battery Revert	Included
Input/Output Impedance	50 Ohms
Antenna Connector Types	
Tx:	N female
Rx:	BNC female without preselector N female with preselector
Frequency Stability Internal Reference (OCXO transceiver option card)	Aging: 30 ppb/yr 100 ppb/5yr Temperature: 40 ppb
Frequency Stability Internal Reference (TCXO transceiver option card)	Aging: 1000 ppb/yr Temperature: 500 ppb
Frequency Stability External Reference	TRAK
Frequency Generation	Synthesized

Table 9: GTR 8000 Base Radio Transmitter Specifications for IV&D UHF R1 (380–435 MHz)

Transmitter Specifications	
Frequency Range	380–435 MHz
Power Output*	2-110 W C4FM, FM 2-100 W LSM, H-DQPSK
Peak Envelope Power	2-110 W C4FM, FM 3.5-182 W LSM, H-DQPSK
Electronic Bandwidth	Full Bandwidth
Modulation	C4FM, LSM, H-DQPSK, FM
Modulation Fidelity	5%
Spurious and Harmonic Emissions Attenuation	90 dB
Analog FM Hum and Noise	
12.5 kHz:	45 dB
25 kHz:	50 dB
Analog Audio Distortion	Less and 2% (1% typical) at 1000 Hz
Emissions Designators	8K70D1W, 8K70D1E, 8K70D1D, 8K10F1W, 8K10F1E, 8K10F1D, 9K80D7W, 9K80D7E,

Transmitter Specifications	
	9K80D7D, 16K0F3E, 11K0F3E, 16K0F1D, 10K0F1D
Adjacent Channel Power Ratio	
12.5 kHz offset, 6 kHz BW:	67 dB
Tx Noise in Rx Band	142 dBc/Hz
Intermodulation Attenuation	65 dB

* Full transmitter output power is available during battery revert.

NOTICE: The output power reference plane is the output connector of the power amplifier. The loss of the transmitter output cable (PA output to back of base radio) is 3% at 450 MHz. However, the base radio software allows the transmitter output power to be set at 10% above rated value. If more than 70 dB Intermodulation Attenuation is required at a site, an external circulator should be added to the transmitter output.

Table 10: GTR 8000 Base Radio Specifications for IV&D UHF R1 (380–435 MHz)

Receiver Specifications	
Frequency Range	380–435 MHz
Modulation	C4FM, H-CPM, FM
Analog Sensitivity (12 dB SINAD)	
12.5 kHz:	-118 dBm
25 kHz:	-117 dBm
Digital Sensitivity 5% Bit Error Rate Static (BER)	
C4FM:	-118 dBm
H-CPM:	-116 dBm
Faded Sensitivity 5% Bit Error Rate (BER)	
C4FM:	-110 dBm
Intermodulation Rejection	85 dB
Digital Adjacent Channel Rejection	60 dB
Analog Adjacent Channel Rejection (EIA603) Analog 12.5 kHz	75 dB
Analog Adjacent Channel Rejection (TIA603D)	Analog 12.5 kHz: 50 or 60 dB (adjustable) Analog 25 kHz: 80 dB
Spurious and Image Response Rejection	85 dB 100 dB with preselector
Analog Audio Response	+1, -3 dB from 6 dB per octave de-emphasis; 300–3000 Hz referenced to 1000 Hz at line output
Analog Audio Distortion	3% or 5% (adjustable)
Analog FM Hum and Noise	

Receiver Specifications		
	12.5 kHz:	45 dB
	25 kHz:	50 dB
Signal Displacement Bandwidth		1 kHz
Intermediate Frequencies		
	1st:	73.35 MHz
	2nd:	2.16 MHz
Electronic Bandwidth		Full Bandwidth
Blocking Immunity		100 dB
Conducted Spurious		-57 dBm
Bit Error Rate Floor		0.01%

Table 11: GTR 8000 Base Radio FCC Identification for IV&D UHF R1 (380–435 MHz)

FCC Identification			
Frequency Range	Type	Power Output	Type Acceptance Number
406.1–435 MHz	Transmitter	2-110 W C4FM, FM, LSM, H-DQPSK	ABZ89FC4821C
406.1–435 MHz	Transmitter	2-110 W C4FM, FM 2-100 W LSM, H-DQPSK	ABZ89FC4821B
406.1–435 MHz	Transmitter	2-33 W C4FM, FM 2-30 W LSM, H-DQPSK	ABZ89FC4831
380–435 MHz	Receiver	N/A	ABZ89FR4822B

1.12.2.1
GTR 8000 Base Radio Industry Canada for Integrated Voice and Data UHF R1 (380–435 MHz)

Table 12: GTR 8000 Base Radio Industry Canada for IV&D (UHF R1 380–435 MHz)

IC Approval Number	Frequency Range	Type	Power Output	IC Model Number
109AB-4821C	Tx 406.1–430 MHz, Rx 406.1–430 MHz	C4FM, FM, LSM, H-DQPSK	Variable 2-100 Watts	T7039-UHFR1C
109AB-4821B	Tx 406.1–430 MHz, Rx 406.1–430 MHz	C4FM, FM	Variable 2-110 Watts	T7039-UHFR1B
109AB-4821B	Tx 406.1–430 MHz, Rx 406.1–430 MHz	LSM, H-DQPSK	Variable 2-100 Watts	T7039-UHFR1B
109AB-4831	Tx 406.1–430 MHz, Rx 406.1–430 MHz	C4FM, FM	Variable 2-33 Watts	GTR8000-UHF130W
109AB-4831	Tx 406.1–430 MHz, Rx 406.1–430 MHz	LSM, H-DQPSK	Variable 2-30 Watts	GTR8000-UHF130W

1.12.3

GTR 8000 Base Radio Specifications for Integrated Voice and Data UHF R2 (435–524 MHz)

Table 13: GTR 8000 Base Radio General Specifications for IV&D UHF R2 (435–524 MHz)

General Specifications	
Model Number	T7039A
Number of Channels (trunked)	1
Number of Channels (conventional)	16
Size (H x W x D)	133mm x 483mm x 457mm (5.25" x 19" x 18")
Weight	21 kg (46 lbs)
Temperature Range	
Operating:	-30 to 60 °C (-22 to 140 °F)
Storage:	-40 to 85 °C (-40 to 185 °F)
Operating Altitude	Up to 1800 meters (5900 ft) above mean sea level Above 1800 meters (5900 ft), the derating is 1.5 °C/km (0.8 °F/1000 ft) Maximum operational altitude is 5000 meters (16900 ft)
Power Requirements	AC: 90-264 VAC, 47-63 Hz DC: 43.2-60 VDC
Power Consumption (Transmitting)	
AC:	C4FM, FM: 460 W max. H-DQPSK, LSM: 510 W max.
DC:	C4FM, FM: 420 W max. H-DQPSK, LSM: 470 W max.
Power Consumption (GTR 8000 Base Radio Standby)	
AC:	110 W max.
DC:	75 W max.
Power Consumption (Standby with Power Efficiency Package)	
AC:	70 W
DC:	35 W
Channel Spacing	12.5/25 kHz
Power Supply Type	Switching
Battery Revert	Included
Input/Output Impedance	50 Ohms
Antenna Connector Types	

General Specifications	
Tx:	N female
Rx:	BNC female without preselector N female with preselector
Frequency Stability Internal Reference (OCXO transceiver option card)	Aging: 30 ppb/yr 100 ppb/5yr Temperature: 40 ppb
Frequency Stability Internal Reference (TCXO transceiver option card)	Aging: 1000 ppb/yr Temperature: 500 ppb
Frequency Stability External Reference	TRAK
Frequency Generation	Synthesized

Table 14: GTR 8000 Base Radio Transmitter Specifications for IV&D UHF R2 (435–524 MHz)

Transmitter Specifications	
Frequency Range	435–524 MHz
Power Output*	2-110 W C4FM, FM 2-100 W LSM, H-DQPSK
Peak Envelope Power	2-110 W C4FM, FM 3.5-182 W LSM, H-DQPSK
Electronic Bandwidth	Full Bandwidth
Modulation	C4FM, LSM, H-DQPSK, FM
Modulation Fidelity	5%
Spurious and Harmonic Emissions Attenuation	90 dB
Analog FM Hum and Noise	
12.5 kHz:	45 dB
25 kHz:	50 dB
Analog Audio Distortion	Less than 2% (1% typical) at 1000 Hz
Emissions Designators	8K70D1W, 8K70D1E, 8K70D1D, 8K10F1W, 8K10F1E, 8K10F1D, 9K80D7W, 9K80D7E, 9K80D7D, 16K0F3E, 11K0F3E, 16K0F1D, 10K0F1D
Adjacent Channel Power Ratio	
12.5 kHz offset, 6 kHz BW:	67 dB
Tx Noise in Rx Band	-142 dBc/Hz
Intermodulation Attenuation	65 dB

*Full transmitter output power is available during battery revert.

NOTICE: The output power reference plane is the output connector of the power amplifier. The loss of the transmitter output cable (PA output to back of base radio) 3% at 450 MHz. However, the base radio software allows the transmitter output power to be set at 10% above rated value. If more than 70 dB Intermodulation Attenuation is required at a site, an external circulator should be added to the transmitter output.

Table 15: GTR 8000 Base Radio Specifications for IV&D UHF R2 (435–524 MHz)

Receiver Specifications	
Frequency Range	435–524 MHz
Modulation	C4FM, H-CPM, FM
Analog Sensitivity (12 dB SINAD)	
12.5 kHz:	-118 dBm
25 kHz:	-117 dBm
Digital Sensitivity 5% Bit Error Rate Static (BER)	
C4FM:	-118 dBm
H-CPM:	-116 dBm
Faded Sensitivity 5% Bit Error Rate (BER)	
C4FM:	-110 dBm
Intermodulation Rejection	85 dB
Digital Adjacent Channel Rejection	60 dB
Analog Adjacent Channel Rejection (EIA603) Analog 12.5 kHz	75 dB
Analog Adjacent Channel Rejection (TIA603D)	
Analog 12.5 kHz:	50 or 60 dB (adjustable)
Analog 25 kHz:	80 dB
Analog Audio Response	+1, -3 dB from 6 dB per octave de-emphasis; 300-3000 Hz referenced to 1000 Hz at line output
Analog Audio Distortion	3% or 5% (adjustable)
Analog FM Hum and Noise	
12.5 kHz:	45 dB
25 kHz:	50 dB
Spurious and Image Response Rejection	85 dB 100 dB with preselector
Signal Displacement Bandwidth	1 kHz
Intermediate Frequencies	
1st:	73.35 MHz
2nd:	2.16 MHz
Electronic Bandwidth	Full Bandwidth
Blocking Immunity	100 dB

Receiver Specifications	
Conducted Spurious	-57 dBm
Bit Error Rate Floor	0.01%

Table 16: GTR 8000 Base Radio FCC Identification for IV&D UHF R2 (435–524 MHz)

FCC Identification			
Frequency Range	Type	Power Output	Type Acceptance Number
435–512 MHz	Transmitter	2-110 W C4FM, FM, LSM, H-DQPSK	ABZ89FC4819C
435–512 MHz	Transmitter	2-50 W C4FM, FM, LSM, H-DQPSK	ABZ89FC4819C
435–512 MHz	Transmitter	2-110 W C4FM, FM 2-100 W LSM, H-DQPSK	ABZ89FC4819B
435–524 MHz	Receiver	N/A	ABZ89FR4820B

1.12.3.1
GTR 8000 Base Radio Industry Canada for Integrated Voice and Data UHF R2 (435–524 MHz)

Table 17: GTR 8000 Base Radio Industry Canada for IV&D (UHF R2 435–524 MHz)

IC Approval Number	Frequency Range	Type	Power Output	IC Model Number
109AB-4819C	Tx 406.1-430 MHz, RX 406.1-430 MHz	C4FM, FM, LSM, H-DQPSK	Variable 2-110 Watts	T7039-UHFR2C
109AB-4819B	Tx 450–470 MHz, Rx 450–470 MHz	C4FM, FM	Variable 2-110 Watts	T7039-UHFR2B
109AB-4819B	Tx 450–470 MHz, Rx 450–470 MHz	LSM, H-DQPSK	Variable 2-100 Watts	T7039-UHFR2B

1.12.4
GTR 8000 Base Radio Specifications for Integrated Voice and Data VHF (136–174 MHz)

Table 18: GTR 8000 Base Radio General Specifications for IV&D VHF (136–174 MHz)

General Specifications	
Model Number	T7039A
Number of Channels (trunked)	1
Number of Channels (conventional)	16
Size (H x W x D)	133mm x 483mm x 457mm (5.25" x 19" x 18")

General Specifications	
Weight	21 kg (46 lbs)
Temperature Range	
Operating:	-30 to 60 °C (-22 to 140 °F)
Storage:	-40 to 85 °C (-40 to 185 °F)
Operating Altitude	Up to 1800 meters (5900 ft) above mean sea level Above 1800 meters (5900 ft), the derating is 1.5 °C/km (0.8 °F/1000 ft) Maximum operational altitude is 5000 meters (16900 ft)
Power Requirements	AC: 90-264 VAC, 47-63 Hz DC: 43.2-60 VDC
Power Consumption (Transmitting) – Mid-Power	
AC:	C4FM, FM: 500 W max. H-DQPSK, LSM: 410 W max.
DC:	C4FM, FM: 460 W max. H-DQPSK, LSM: 360 W max.
Power Consumption (Transmitting) – High-Power	
AC:	C4FM, FM: **TBD** W max. H-DQPSK, LSM: **TBD** W max.
DC:	C4FM, FM: **TBD** W max. H-DQPSK, LSM: **TBD** W max.
Power Consumption (Standby)	
AC:	110 W max
DC:	75 W max
Channel Spacing	12.5/25 kHz
Power Supply Type	Switching
Battery Revert	Included
Input/Output Impedance	50 Ohms
Antenna Connector Types	
Tx:	N female
Rx:	BNC female without preselector N female with preselector
Frequency Stability Internal Reference (transceiver option card)	Aging: 30 ppb/yr 100 ppb/5yr Temperature: 40 ppb

General Specifications	
Frequency Stability External Reference	TRAK
Frequency Generation	Synthesized

Table 19: GTR 8000 Base Radio Transmitter Specifications for IV&D VHF (136–174 MHz)

Transmitter Specifications	
Frequency Range	136–174 MHz
Power Output* (Mid-Power)	2-100 W C4FM, FM 2-60 W LSM, H-DQPSK
Power Output* (High-Power)	2-100 W C4FM, FM 2-100 W LSM, H-DQPSK
Peak Envelope Power	2-100 W C4FM, FM 3.5-110 W LSM, H-DQPSK
Peak Envelope Power (High-Power)	2-100 W C4FM, FM 3.5-182 W LSM, H-DQPSK
Electronic Bandwidth	Full Bandwidth
Modulation	C4FM, LSM, H-DQPSK, FM
Modulation Fidelity	5%
Spurious and Harmonic Emissions Attenuation	90 dB
Analog FM Hum and Noise	
12.5 kHz:	45 dB
25 kHz:	50 dB
Analog Audio Distortion	Less than 2% (1% typical) at 1000 Hz
Emissions Designators	8K70D1W, 8K70D1E, 8K70D1D, 8K10F1W, 8K10F1E, 8K10F1D, 9K80D7W, 9K80D7E, 9K80D7D, 16K0F3E, 11K0F3E, 16K0F1D, 10K0F1D
Adjacent Channel Power Ratio	
12.5 kHz offset, 6 kHz BW:	67 dB
Intermodulation Attenuation	55 dB

*Full transmitter output power is available during battery revert.

NOTICE: The output power reference plane is the output connector of the power amplifier. The loss of the transmitter output cable (PA output to back of base radio) 1% at 150 MHz. However, the base radio software allows the transmitter output power to be set at 10% above rated value. If more than 70 dB Intermodulation Attenuation is required at a site, an external circulator should be added to the transmitter output.

Table 20: GTR 8000 Base Radio Specifications for IV&D VHF (136–174 MHz)

Receiver Specifications	
Frequency Range	136–174 MHz
Modulation	C4FM, H-CPM, FM
Analog Sensitivity (12 dB SINAD)	
12.5 kHz:	-119 dBm
25/30 kHz:	-118 dBm
Digital Sensitivity 5% Bit Error Rate Static (BER)	
C4FM:	-119 dBm
H-CPM:	-117 dBm
Faded Sensitivity 5% Bit Error Rate (BER)	
C4FM:	-111 dBm
Intermodulation Rejection	85 dB
Digital Adjacent Channel Rejection	60 dB
Analog Adjacent Channel Rejection (EIA603) Analog 12.5 kHz	75 dB
Analog Adjacent Channel Rejection (TIA603D)	
Analog 12.5 kHz:	50 or 60 dB (adjustable
Analog 25 kHz:	80 dB
Spurious and Image Response Rejection	90 dB 95 dB with preselector
Analog Audio Response	+1, -3 dB from 6 dB per octave de-emphasis; 300–3000 Hz referenced to 1000 Hz at line output
Analog Audio Distortion	3% or 5% (adjustable)
Analog FM Hum and Noise	
12.5 kHz:	45 dB
25 kHz:	50 dB
Signal Displacement Bandwidth	1 kHz
Intermediate Frequencies	
1st:	44.85 MHz
2nd:	2.16 MHz
RF Input Connector with Optional Preselector	N female
Electronic Bandwidth	Full Bandwidth
Blocking Immunity	100 dB
Conducted Spurious	-57 dBm
Bit Error Rate Floor	0.01%

Table 21: GTR 8000 Base Radio FCC Identification for IV&D VHF (136–174 MHz)

FCC Identification			
Frequency Range	**Type**	**Power Output**	**Type Acceptance Number**
136–174 MHz	Transmitter	2-100 W C4FM, FM 2-60 W LSM, H-DQPSK	ABZ89FC3790B
136–174 MHz	Transmitter	2-100 W C4FM, FM, LSM, H-DQPSK	ABZ89FC3799B
136–174 MHz	Receiver	N/A	ABZ89FR3791B

1.12.4.1
GTR 8000 Base Radio Industry Canada for Integrated Voice and Data VHF (136–174 MHz)

Table 22: GTR 8000 Base Radio Industry Canada for IV&D (VHF 136–174 MHz)

IC Approval Number	Frequency Range	Type	Power Output	IC Model Number
109AB-3790B	Tx 138–174 MHz, Rx 138–174 MHz	C4FM, FM	Variable 2–100 Watts	T7039-VHFB
109AB-3790B	Tx 138–174 MHz, Rx 138–174 MHz	LSM, H-DQPSK	Variable 2–60 Watts	T7039-VHFB
109AB-3799B	Tx 138–174 MHz, Rx 138–174 MHz	C4FM, FM, LSM, H-DQPSK	Variable 2–100 Watts	T7039-VHF100W

1.12.5
GTR 8000 Base Radio Specifications for High Performance Data (700/800 MHz)

Table 23: General Specifications for GTR 8000 Base Radio for HPD (700/800 MHz)

General Specifications	
Model Number	T7039A
Number of Channels	1
Size (H x W x D)	133mm x 483mm x 457mm (5.25" x 19" x 18")
Weight	21 kg (46 lbs)
Temperature Range	
Operating:	-30 to 60 °C (-22 to 140 °F)
Storage:	-40 to 85 °C (-40 to 185 °F)
Operating Altitude	Up to 1800 meters (6000 ft) above mean sea level
Power Requirements	AC: 90-264 VAC, 47-63 Hz DC: 43.2-60 VDC
Power Consumption	AC: 450 W

General Specifications	
	DC: 410 W
Channel Spacing	25 kHz
Modulation	64 QAM, 16 QAM, QPSK
Power Supply Type	Switching
Battery Revert	Included
Input/Output Impedance	50 Ohms
Antenna Connector Types	
Tx:	N female
Rx:	BNC female
Frequency Stability	External Reference (TRAK)
Frequency Generation	Synthesized

Table 24: Transmitter Specifications for GTR 8000 Base Radio for HPD (700/800 MHz)

Transmitter Specifications	
Frequency Range	769-775, 775-776, 851–870 MHz
Power Output*	2-50 W
Electronic Bandwidth	Full Bandwidth
Error Vector Magnitude	10%
Spurious and Harmonic Emissions Attenuation	90 dB
Emissions Designators	17K7D7D
Adjacent Channel Power Ratio	
25 kHz offset, 18 kHz BW:	58 dB
37.5 kHz offset, 25 kHz BW:	65 dB
Tx Noise in Rx Band	-142 dBc/Hz
Intermodulation Attenuation	80 dB

* Full transmitter output power is available during battery revert.

NOTICE: The output power reference plane is the output connector of the power amplifier. The loss of the transmitter output cable (PA output to back of base radio) is 4% at 800 MHz. However, the base radio software allows the transmitter output power to be set at 10% above rated value.

Table 25: Receiver Specifications for GTR 8000 Base Radio for HPD (700/800 MHz)

Receiver Specifications	
Frequency Range	792–825 MHz
Digital Sensitivity 1% Bit Error Rate Static (BER)	
64 QAM:	-98 dBm

Receiver Specifications	
16 QAM:	-104 dBm
QPSK:	-111dBm
Faded Sensitivity 1% Bit Error Rate TU50 (BER)	
64 QAM:	-90 dBm
16 QAM:	-96 dBm
QPSK:	-101 dBm
Faded Sensitivity 5% Bit Error Rate HT200 (BER)	
64 QAM:	-90 dBm
Faded Sensitivity 2% Bit Error Rate HT200 (BER)	
16 QAM:	-94 dBm
Faded Sensitivity 1% Bit Error Rate HT200 (BER)	
QPSK:	-98 dBm
Intermodulation Rejection*	75 dB
Digital Adjacent Channel Rejection*	50 dB
Spurious and Image Response Rejection*	85 dB
Intermediate Frequencies	
1st:	73.35 MHz
2nd:	2.16 MHz
Electronic Bandwidth	Full Bandwidth
Blocking Immunity	90 dB
Conducted Spurious	-57 dBm
Bit Error Rate Floor	0.01%
Co-Channel Rejection QPSK	11 dB

* Reference signal is QPSK

Table 26: FCC Identification for GTR 8000 Base Radio for HPD (700/800 MHz)

FCC Identification			
Frequency Range	**Type**	**Power Output**	**Type Acceptance Number**
769-775, 775-776 MHz	Transmitter	2-50 W	ABZ89FC5812B
851–870 MHz	Transmitter	2-50 W	ABZ89FC5810B
792–825 MHz	Receiver	N/A	ABZ89FR5811B

1.12.5.1
GTR 8000 Base Radio Industry Canada for High Performance Data (700/800 MHz)

Table 27: GTR 8000 Base Radio Industry Canada for HPD (700/800 MHz)

IC Approval Number	Frequency Range	Type	Power Output	IC Model Number
109AB-5810B	Tx 851–866 MHz, Rx 806–821 MHz	HPD	Variable 2-50 Watts (average)	T7039-800B
109AB-5812B	Tx 768–776 MHz, Rx 798–806 MHz	HPD	Variable 2-50 Watts (average)	T7039-700B

1.12.6
Specifications for GTR 8000 Base Radio Cabinet

Table 28: General Specifications for GTR 8000 Base Radio Cabinet

General Specifications	
Height	
Cabinet Version (Option CA02446AA):	31 in. (78.74 cm) 15 Rack Units
Cabinet Version (Option CA02447AA):	47 in. (119.4 cm) 24 Rack Units
Footprint (W x D)	24 in. x 24 in. (609.6 mm x 609.6 mm)
Weight (empty cabinet)	
Cabinet Version (Option CA02446AA):	77.6 lb (35.2 kg)
Cabinet Version (Option CA02447AA):	123 lb (55.8 kg)
Weight (with one base radio)	
Cabinet Version (Option CA02446AA):	98.6 lb (44.72 kg)
Cabinet Version (Option CA02447AA):	144 lb (65.32 kg)
Maximum Stack Quantity*	2
Maximum Stack Height	
Cabinet Version (Option CA02446AA):	62 in. (157.48 cm)
Cabinet Version (Option CA02447AA):	94 in. (238.76 cm)
Temperature Range, Operating	
Cabinet without Doors:	-22 to 140 °F (-30 to 60 °C)
Cabinet with Doors:	-22 to 131 °F (-30 to 55 °C)

General Specifications		
Temperature Range, Storage	-40 to 185 °F (-40 to 85 °C)	
Maximum Recommended Ambient with # of Base Radios**	**31 in. 15 RU Cabinet**	**47 in. 24 RU Cabinet**
1	55	55
2	50	55
3	50	55
4	NR	50
5	NR	50
6	na	45
7	na	NR
8	na	NR
Operating Altitude	Up to 1800 meters (5900 ft) above mean sea level Above 1800 meters (5900 ft), the derating is 1.5 °C/km (0.8 °F/1000 feet) Maximum operational altitude is 5000 meters (16900 ft)	

* = If different size cabinets are being stacked, place the larger cabinet on the bottom. Use a 9/16 in. hexagon head screw with washer and lock nut. The minimum bolt size must not be smaller than 1/2 in.

** = NR - Not recommended. Though the cabinet does have enough available space to accommodate this number of chassis, typically some peripherals, RFDS, networking, and other equipment may be colocated and occupy the remaining space. In addition, a few RUs of space for cable egress is recommended at the top of the cabinet so cables do not interfere with the airflow from the equipment. If adding more equipment than shown, validate that the internal cabinet temperature does not exceed the rating of any installed devices.

Chapter 2

GTR 8000 Base Radio Theory of Operation

For an understanding of the GTR 8000 Base Radio components, review the modules that provide the base radio functionality, the modules that provide RF distribution functionality (RFDS), and the backplane that connects to other modules within the site.

This chapter explains how the GTR 8000 Base Radio works in the context of your system.

2.1 Functions of the GTR 8000 Base Radio Modules

The following lists GTR 8000 Base Radio modules:

- Transceiver (XCVR) module (with or without a transceiver option card)
- Power amplifier module
- Fan module
- Power supply module

2.1.1 Function of the Transceiver Module

The transceiver module provides the control, exciter, receiver, and optional transceiver option card for the base radio.

Figure 5: Transceiver Module (Front View)

The transceiver generates the station reference, which typically must be locked on to one of many possible external sources. The external source can be either the site controller TDM clocks or the external reference operating at 5 MHz or 10 MHz.

The transceiver SPI bus allows communication with its receiver and exciter circuitry, as well as the power supply module and power amplifier module.

Two or three circuit boards in the transceiver are:

Transceiver Control Board
Performs the control management, digital signal processing, and transmit and receive data formatting for the base radio.

Transceiver RF Board
Contains DC power conversion/regulation and performs receiver and exciter functions.

Transceiver Option Card

An optional board that attaches to the control board. Provides an internal 10 MHz frequency reference. For conventional operation, it also provides the analog interfaces and WildCard I/Os. The transceiver option card requires an internal frequency reference oscillator alignment at different intervals mandated by its category and frequency band. See Base Radio Service Help > Service Screens > Alignment Screens in the *CSS Online Help* for the alignment procedures and mandated intervals.

The transceiver option card is available in two categories:

- **OCXO (Oven Controlled Crystal Oscillator)** – operates at 0.1 ppm and is inclusive to temperature and aging. The OCXO Transceiver Option Card is available in 700/800 MHz, UHF R1/R2, and VHF frequency bands.
- **TCXO (Temperature Compensated Crystal Oscillator)** – operates at 1.5 ppm, of which 0.5 ppm is allocated to temperature, and 1.0 ppm is allocated to aging. Reference precision with the TCXO is traded for lower power consumption. The TCXO mandates shorter maintenance intervals. The TCXO transceiver option card is available in UHF R1/R2 frequency bands. The TXCO is only available for non-simulcast conventional systems.

2.1.1.1
Transceiver Control Board

The main operating software for the base radio is loaded in the XCVRs control section. As the main manager for the base radio, the XCVR control board provides operational control over the other station modules. It handles three types of information flow, in the following ways:

- Serves as a gateway between the network and RF functionality, by distributing the RF payload to and from the network.
- Supports operational and diagnostic functions with digital control data (for example: site information, channel assignments, and identification numbers for call processing).
- Ensures the flow of other network management configuration information.

Figure 6: Transceiver Control Board Information Flow on page 62 shows the information flow through the transceiver control and RF sections for trunked and conventional operation.

Figure 6: Transceiver Control Board Information Flow

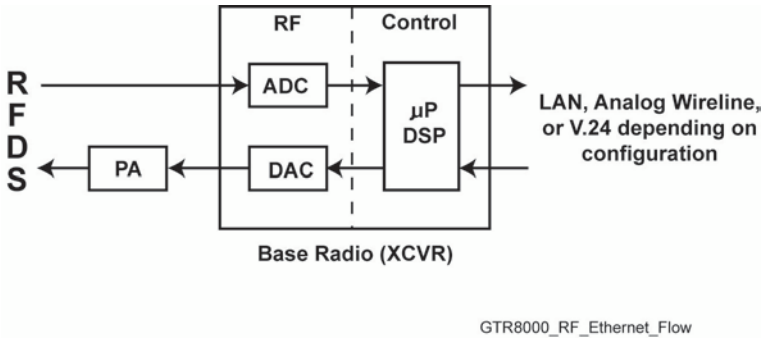

2.1.1.2
Transceiver RF Board

In addition to DC power conversion/regulation, the XCVR RF board provides circuitry for the following exciter and receiver functions.

2.1.1.2.1
Exciter

The exciter on the XCVR RF board provides the transmitter functions for the base radio. The exciter circuitry generates a low-level, modulated RF signal that passes to the power amplifier. It supports various modulation types as well as bandwidths up to 25 kHz, through software programming.

The exciter also provides a controlled output power level to the power amplifier.

2.1.1.2.2
Receiver

The receiver provides either single receiver input or dual (HPD or TDMA) receiver inputs for dual diversity. The receiver also provides enhanced diagnostic capabilities using an on board noise source generator. It includes a wide tuning range (electronic varactor-tuned) preselector. The preselector is electronically tuned to the desired receive frequency anywhere between 792–825 MHz, UHF R1 380–435 MHz, UHF R2 435–524 MHz, or VHF 136–174 MHz.

2.1.1.3
Transceiver External Interfaces

The transceiver external interfaces include seven external ports, a switch, and LEDs. If a transceiver option card is part of the transceiver, there are four additional external ports. See GTR 8000 Base Radio Front Connections on page 110 for the port connections. See GTR 8000 Base Radio LEDs on page 264 for information on the LEDs.

2.1.1.3.1
Transceiver Switch

The multifunction RESET switch on the front of the transceiver module is accessible through the drop-down door to the left of the fans. The RESET switch has two functions:

Figure 7: Transceiver RESET Switch (viewable through the drop-down door)

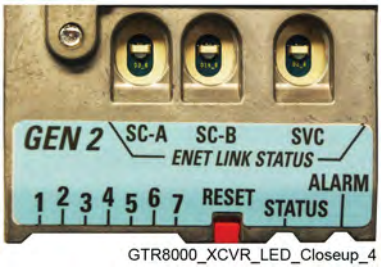

Table 29: Transceiver Front RESET Switch Functions

User Action	Result
Press switch for less than 1 second	Toggles between Tx Inhibit and Tx Enable (LED 3 blinks amber)
Press switch for more than 3 seconds, then release	Transceiver Control Module Reset

2.1.1.3.2
Transceiver Option Card Intercom Button

The intercom button on the front of the transceiver option card is accessible behind the fan module. Pressing the intercom button toggles the intercom function between the ON and OFF states.

Figure 8: Transceiver Option Card Intercom Button (behind the fan module)

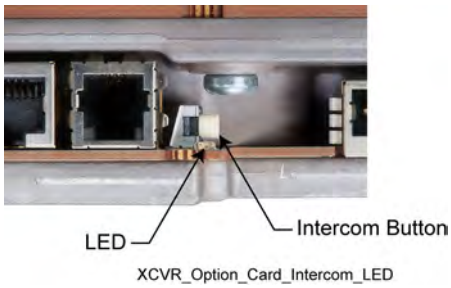

2.1.1.3.3
Transceiver Ports (Rear)

The transceiver interconnects to the backplane using a 120-pin HVDML digital connector and 8-pack RF connector, as shown in the figure. These connections handle multiple signals including power supply communications, power amplifier communications, fan interface, and peripheral interface. The digital connection receive alarm data and the site controller Time Division Multiplexer (TDM) signals are used to pass reference and control data to the base radio.

Figure 9: Transceiver Module (Backplane Connections)

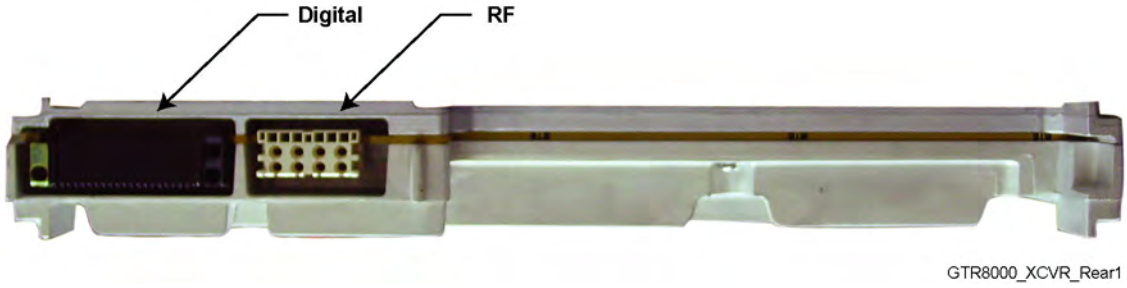

Single Receiver Input

An RJ-45 Ethernet port on the backplane is cabled to a site LAN switch for this channel. The backplane also provides an RF connection to the transceiver for receive (Rx) path A.

Dual Receiver Input

RJ-45 Ethernet ports on the backplane are cabled to corresponding ports on the site controller backplanes (HPD). The backplane also provides RF connections to the transceiver for receive (Rx) paths A and B (HPD and TDMA).

2.1.2
Function of the Power Amplifier Module

The power amplifier (PA) is a forced convection-cooled RF power amplifier. It accepts a low-level modulated RF signal from the transceiver module, and amplifies it for transmission through the site transmit antenna. Also, to complete the Cartesian correction loop (linearization method), it provides a low-level RF feedback signal to the transceiver module to achieve the required transmitter linearity.

Transmit power output can be set using Configuration/Service Software (CSS). See Configuring Tx Power Values and Battery Type on page 153.

The power amplifier also performs functions related to the fan module, including reporting of the fan module status and supplying power to the fan power bus.

Figure 10: Power Amplifier Module

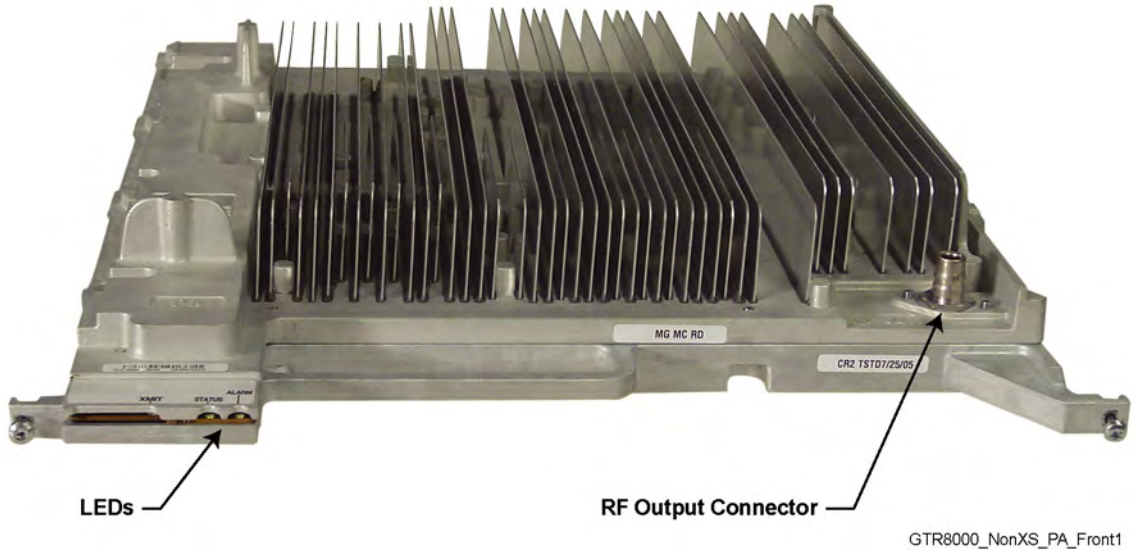

The power amplifier is comprised of six internal modules:

- Core Board
- Converter Board
- Driver Amplifier Board
- Final Amplifier Board
- Distribution Board
- Output Circuitry

2.1.2.1
Power Amplifier Input/Output Connections

There are three electrical connection assemblies on the power amplifier:

- RF output (front QN "quick-N" connector) on the front of the power amplifier module

  NOTICE: This is cabled to the N-type female bulkhead connection at the rear of the base radio housing.

- DC power supply/control signal (backplane connection)
- RF input/feedback (backplane connection).

Figure 11: Power Amplifier (Backplane Connections)

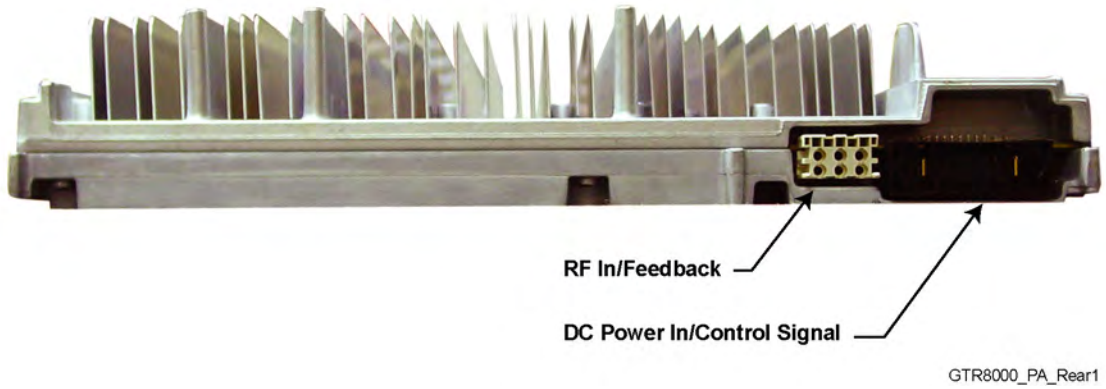

2.1.3

Function of the Fan Module

The fan module provides intermittent forced-air cooling for the power amplifier and transceiver modules. The fan module houses two 119 mm axial fans which deliver a total of approximately 160 cubic feet per minute of airflow. Nominal fan speed is 4100 revolutions per minute. A thermostat behind the fan module controls each fan. If the fan speed for either fan falls below 30% of the rated speed, a built-in speed sensor on each fan turns on the red Fan Alarm LED.

If the fan module is used for the Power Efficiency Package, the following must be configured in the Configuration/Service Software (CSS) to take full advantage of the Power Efficiency Package:

- Optional fan holdover time (length of time the fan stays ON after transmission).
- Disabling one of the fans within the fan module. See Replacing the Fan Assembly on page 237 for instructions on how to disable one of the fans.
- Configuring the base radios Tx Power Out in the CSS should be limited to 50 W.

The fan module connects to the backplane through a 4-pin port on the front of the chassis.

NOTICE: The power supply module has its own fan which provides independent airflow.

Figure 12: Fan Module

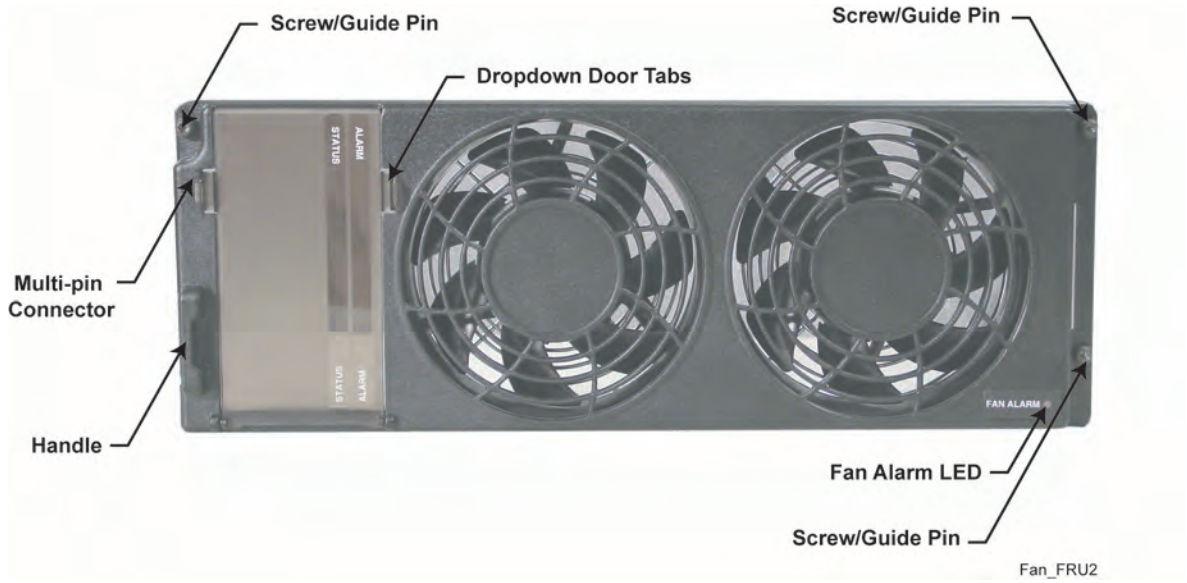

2.1.4
Function of the Power Supply

The power supply, with front-to-rear airflow, operates from either an AC or DC input and provides the DC operating voltage for the base radio. However the power supply prioritizes an AC source (if present) over a DC source.

Figure 13: Power Supply

NOTICE: If the power supply module is used for the Power Efficiency Package, the power supply must be used in DC mode to obtain the 35 W standby power consumption performance.

When operating from an AC source (90 to 264 VAC, 47-63 Hz), the supply generates two DC output voltages of 29 V with respect to output ground. The power supply automatically adjusts to AC input ranges and supplies a steady output.

In AC mode, the power supply may provide a separate battery charger which can be used to maintain the charge on a 48 VDC nominal system, positive or negative ground, if installed. The supply generates two DC output voltages of 29 V with respect to output ground, when operating from a DC source (43.2 VDC to 60 VDC maximum), positive or negative ground. This voltage limit includes consideration of the battery charging "float voltage" associated with the intended supply system, regardless of the marked power rating of the equipment. Whether in AC, Battery Revert, or DC Only mode, at a voltage of 42 V or lower, the power supply shuts down to not damage any connected battery bank. Once this condition occurs, the power supply starts only after the applied voltage exceeds 45 V.

The battery charger is not usable when operating from a DC input power source. This DC source must be located in the same building as the base radio, and it must meet the requirements of a SELV circuit.

The power supply contains several switching-type power supply circuits as follows:

- Power factor correction circuitry
- Battery charging circuitry
- Diagnostics and monitoring circuitry

The power supply controls its own continuously running fan, changing its speed to fast, or slow as needed.

NOTICE: If the power supply module is used for the Power Efficiency Package, the power supply fan does not run below a 40 °C air inlet temperature in DC mode with the transmitter in a de-keyed state.

2.1.4.1
AC/DC Power Distribution – Base Radio

Figure 14: AC and DC Power Distribution in the GTR 8000 Base Radio

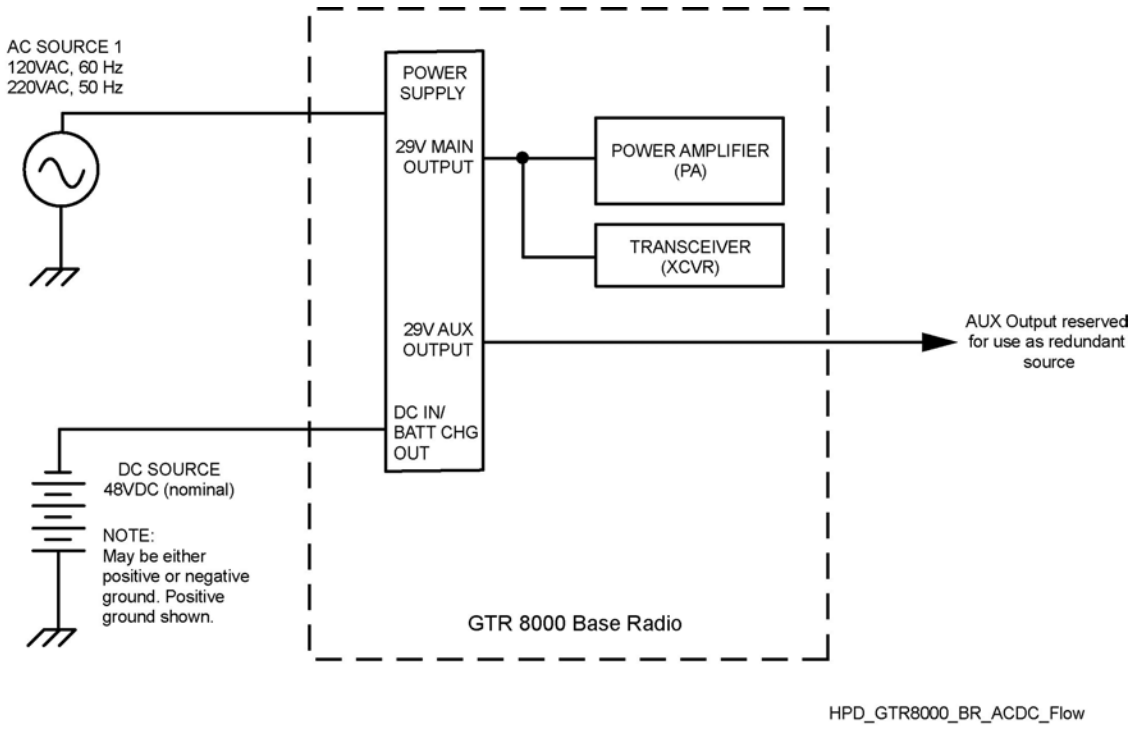

If present, the base radio operates from AC power as the preferred power source. When AC power is not available, the base radio switches to operate from the DC source. Operation returns to the AC source when the AC source is restored. Switchover from AC to DC and back again is fully automatic.

The Main DC output of the power supply is used to provide power to the power amplifier and the transceiver. The Auxiliary output of the power supply is not used within the base radio, but is reserved for use as a redundant power input to other site components such as the site controller.

2.1.4.2
Power Supply Battery Charger

The power supply may include an integrated battery charger. The battery charger is controlled through software residing on the associated device module. Software contains the information on supported battery types and obtains user-specific information pertaining to the particular site. The device software receives battery bus voltage and battery temperature information from the power supply, and uses these variables with supported battery charging profiles to return a signal which sets the charger output voltage appropriately. The battery charge and temperature conditions are viewed through

Configuration/Service Software (CSS) and Unified Network Configurator (UNC), or through alarms to Unified Event Manager (UEM).

The maximum charging current available from the integrated charger is 3 A (48 VDC nominal system). A battery with capacity no larger than 60 Ah should be connected to a single charger to ensure that the charger maintains an adequate state-of-charge on the backup battery, and the backup battery is restored to full capacity within a reasonable amount of time following operation on battery backup power.

In addition to standard sealed lead-acid batteries (valve-regulated lead acid or gel cells), the power supply supports charging of vented lead-acid and NiCd batteries.

2.1.4.3
Battery Temperature Sensor Cable

The integrated charger in the power supply performs temperature compensated battery charging when a temperature sensor is connected. If the sensor is disconnected, the charger continues to operate as an uncompensated charger with the charging profile following the minimum charger voltage specified by the battery manufacturer.

Included is a 40 ft battery temperature sensor cable, which attaches to a battery pack, supplied by your organization, and to the backplane of the device. This three-wire cable carries a voltage signal to the power supply from the sensor element, which must be mounted close to the storage battery. Voltage is proportional to the battery temperature, and the diagnostic circuitry in the power supply module. This cable is extended to a total length of 190 ft using 50 ft extensions. See Battery Temperature Sensor Mounting on page 103.

IMPORTANT: Continuous operation with a disconnected sensor is not recommended.

2.1.4.4
ON/OFF Switch for Power Supply and Battery Charger

This table identifies the switch states for the power supply and battery charger.

Table 30: ON/OFF Switch - States for Power Supply and Battery Charger

Switch Position	Power Supply State	Battery Charger State
ON (1)	• Power Factor Correction (PFC) section is active (AC input only) • Main DC converter runs to create the MAIN and AUX DC outputs	DLN6781A can be started if desired (AC input only) DLN6805A Disabled
OFF (0)	• Main DC converter is turned OFF and the MAIN and AUX DC outputs become 0.0 VDC	Disabled (AC input only)

2.1.4.5
Power Supply Module Backplane Connections

This table provides descriptions and functions of the power supply backplane connections.

Table 31: Power Supply Module Backplane Connections

Port/Type	Description
AC	Input only
Battery / DC Power and Control Signal	**48 VDC:** • Provides the DC input to the power supply when operating from a DC source. • Connects the charger output to the standby battery when operating from an AC input with a standby DC battery. **29 VDC:** • Provides the Main and Auxiliary DC outputs of the power supply for use by the power amplifier, transceiver, and site controller. Other signals this connector handles include control interface and battery temperature interface.

Figure 15: Power Supply Connections (Rear)

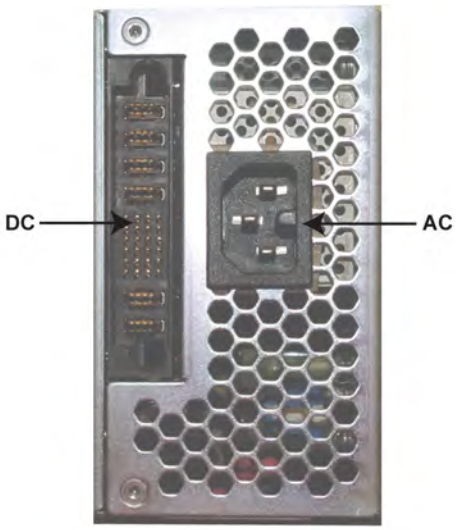

G_Series_PS_Rear1

2.2
Backplanes and Card Cages

Card cages are created with a welded and riveted design. Each card cage has a backplane.

- See GTR 8000 Base Radio Rear Connections (Integrated Voice and Data) on page 105 and GTR 8000 Base Radio Rear Connections (HPD) on page 108.

2.3 RFDS Modules

The Radio Frequency Distribution System (RFDS) equipment included in your system depends on which options were purchased from Motorola Solutions. The following are some examples of the RFDS equipment available for your system.

NOTICE: If the RTTE option was selected, a duplexer is required for applicable applications.

2.3.1 RFDS Preselector (700/800 MHz)

The preselector provides a first level of band pass filtering for inbound RF signals. RF input and output connectors are cabled to the RF Output RX-A. This filter must be included to fulfill TIA102-CAAB Class A spurious response rejection (90 dB). The filter is not required when using a receiver multicoupler system. This filter CANNOT be retuned in the field.

Figure 16: Preselector Filter (700/800 MHz)

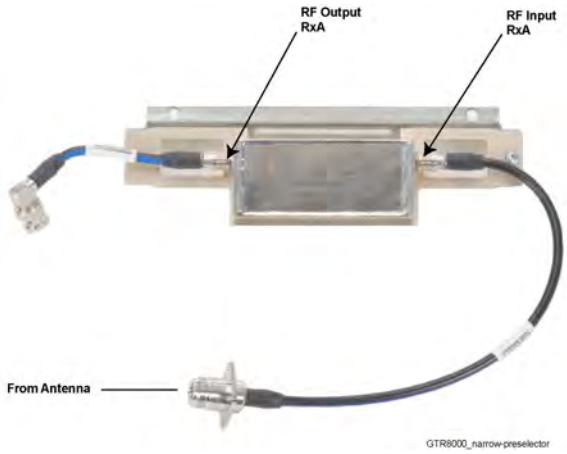

2.3.2 RFDS Preselector (UHF)

The preselector rejects unwanted signals including the transmitter signals from overloading the receiver. This filter must be included to fulfill TIA102-CAAB Class A spurious response rejection (90 dB). The filter is not required when using a receiver multicoupler system. This filter can be retuned in the field.

Figure 17: Preselector (UHF)

2.3.3
RFDS Preselector (VHF)

The preselector rejects unwanted signals including the transmitter signals from overloading the receiver. This filter must be included to fulfill TIA102-CAAB Class A spurious response rejection (90 dB). The filter is not required when using a receiver multicoupler system. This filter can be retuned in the field.

Figure 18: Preselector (VHF)

2.3.4
RFDS - Transmit Filter (700/800 MHz)

The transmit filter removes any noise in the receive sub-band. The Tx Output from the GTR 8000 Base Radio connects to the Transmit Filters Tx In. The Transmit Filters Tx Out connects the Tx Output or any other RFDS equipment.

Figure 19: Transmit Filter (700/800 MHz)

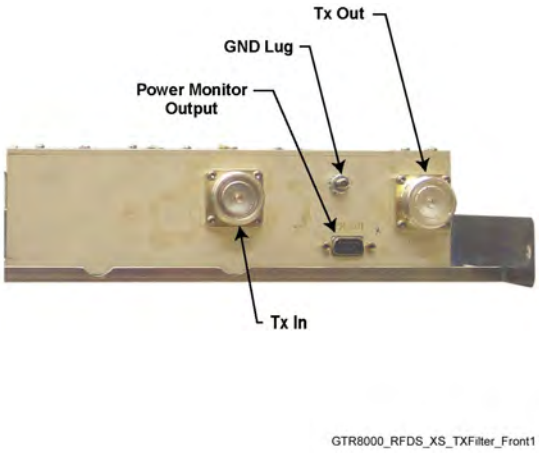

2.3.5

RFDS - Duplexer (700/800 MHz)

This optional filter provides the capability to use a single antenna for both transmitter and receiver. Only one transmitter and receiver can be combined.

Figure 20: Duplexer (700/800 MHz)

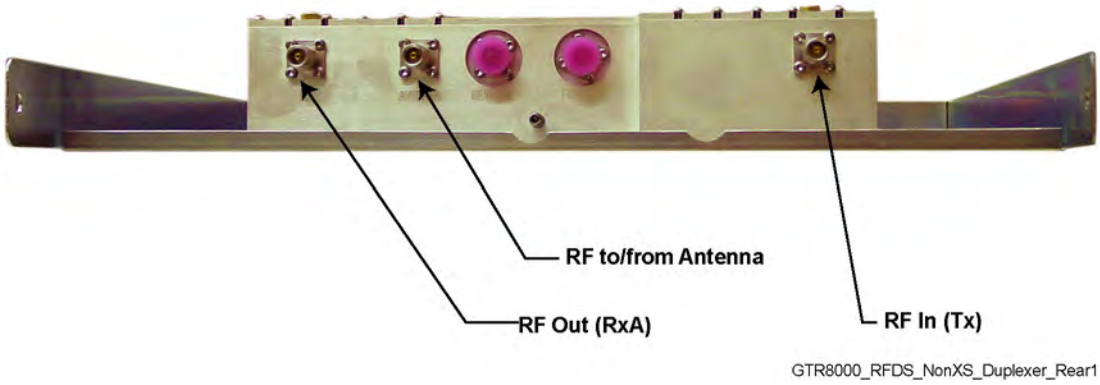

2.3.6

RFDS - Duplexer (UHF)

This optional filter provides the capability to use a single antenna for both transmitter and receiver. Only one transmitter and receiver can be combined.

Figure 21: Duplexer (UHF)

2.3.7

RFDS - Duplexer (VHF)

This optional filter provides the capability to use a single antenna for both transmit and receiver. Only one transmitter and receiver can be combined.

Figure 22: Duplexer (VHF)

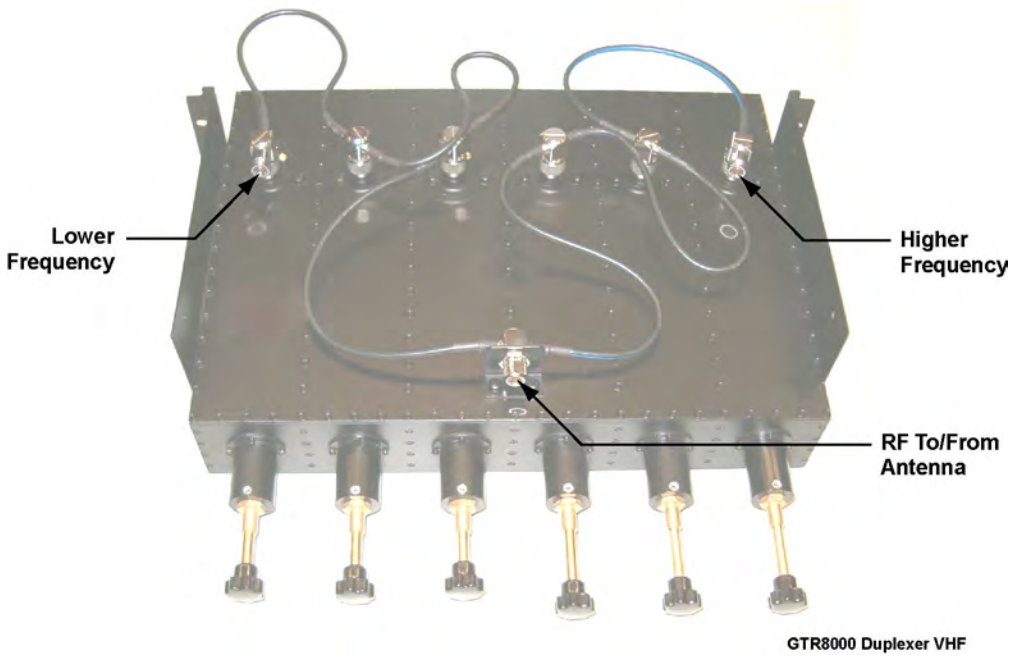

2.3.8

RFDS - External Dual Circulator/Isolator Tray (700/800 MHz)

An option for the GTR 8000 Base Radio is an External Dual Circulator module which isolates the base radio from the antenna, thus preventing the transmitter from generating intermodulation. The circulator load dissipates reflected power. It includes a cable that connects to the RF Peripherals port on the base radio backplane to provide temperature monitoring.

Figure 23: External Dual Circulator/Isolator Tray (700/800 MHz)

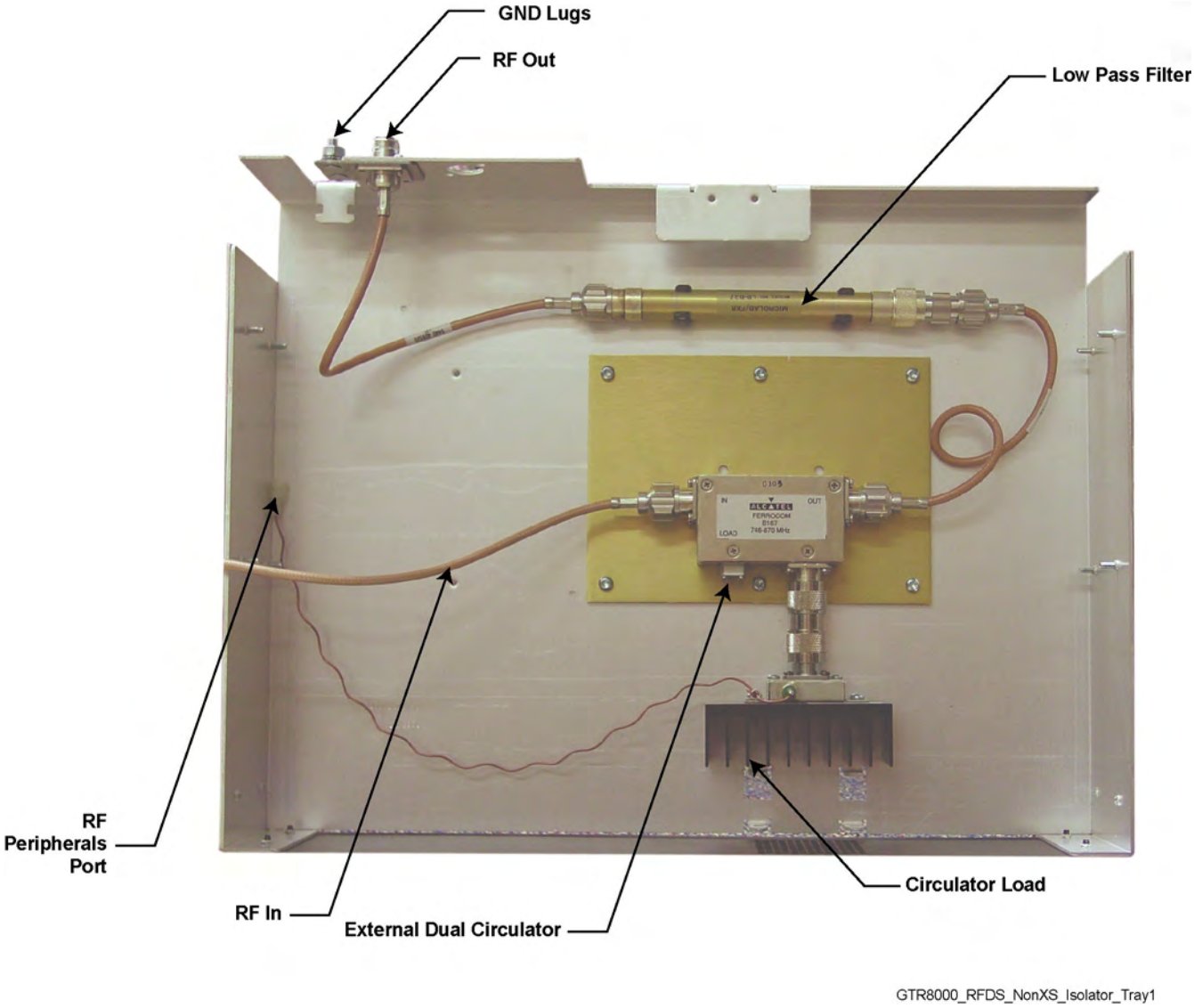

2.3.9

RFDS - External Dual Circulator/Isolator Tray (UHF)

An option for the GTR 8000 Base Radio is an External Dual Circulator module which isolates the base radio from the antenna, thus preventing the transmitter from generating intermodulation. The circulator load dissipates reflected power. It includes a cable that connects to the RF Peripherals port on the base radio backplane to provide temperature monitoring.

Figure 24: External Dual Circulator/Isolator Tray (UHF)

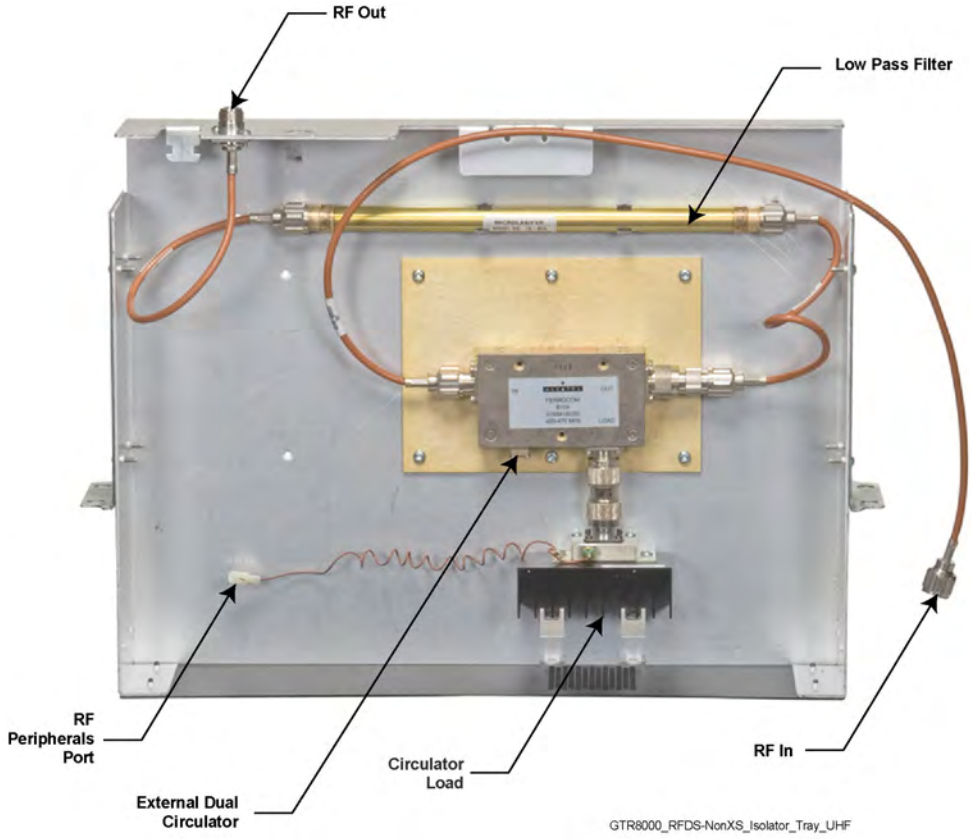

2.3.10
RFDS - External Dual Circulator/Isolator Tray (VHF)

An option for the GTR 8000 Base Radio is an External Dual Circulator module which isolates the base radio from the antenna, thus preventing the transmitter from generating intermodulation. The circulator load dissipates reflected power. It includes a cable that connects to the RF Peripherals port on the base radio backplane to provide temperature monitoring.

2.3.11
Antenna Relay Module

The antenna relay module allows a single antenna to be used for both transmit and receive functions on a conventional GTR 8000 Base Radio. A signal from the base radio transceiver module controls the antenna relay module. The antenna relay module is typically mounted on the backplane cover on the rear of the base radio, or on the peripheral tray if the base radio is equipped with other options. Figure 25: Antenna Relay Module Connections on page 77 shows the antenna relay module input and output external connections. Settings for the antenna relay module are made through Configuration/Service Software (CSS) and UNC.

NOTICE: If the antenna relay is Enabled and it is then disconnected, a failure is generated and logged stating the antenna relay is disconnected. However, the base radio also generates an exciter failure because the antenna relay is controlled and monitored through the exciter module. The exciter failure should be ignored until after the antenna relay failure is corrected. The failures are reported in the Status Report and UEM.

Figure 25: Antenna Relay Module Connections

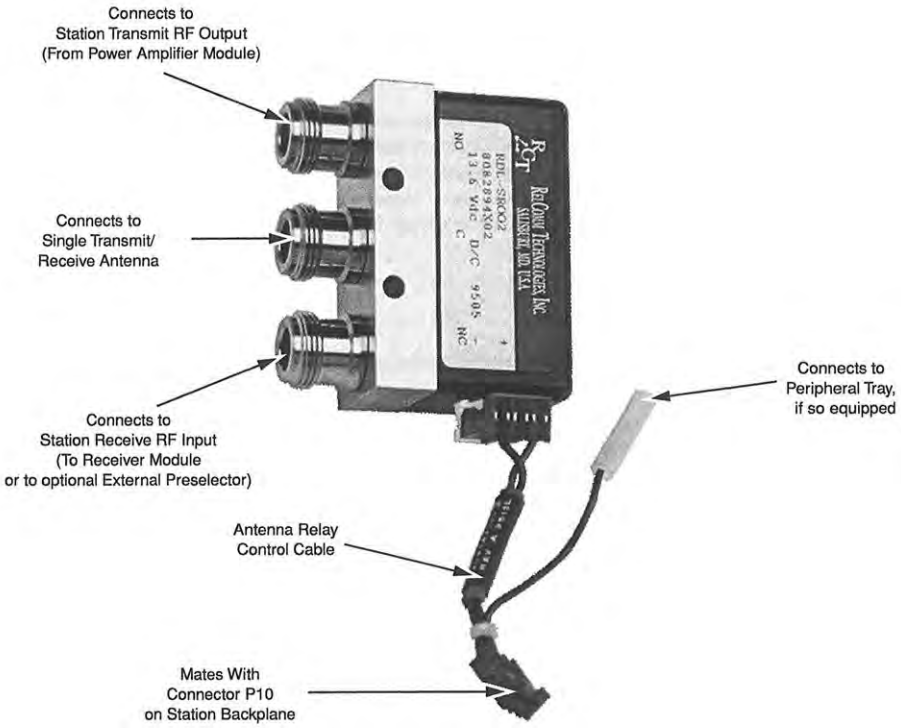

2.3.11.1

Mounting Locations

The antenna relay module may be installed in either of two locations.

On base radios **not equipped** with the peripheral tray, the antenna relay is mounted on the backplane cover.

Figure 26: Base Radio Backplane Mounting Location

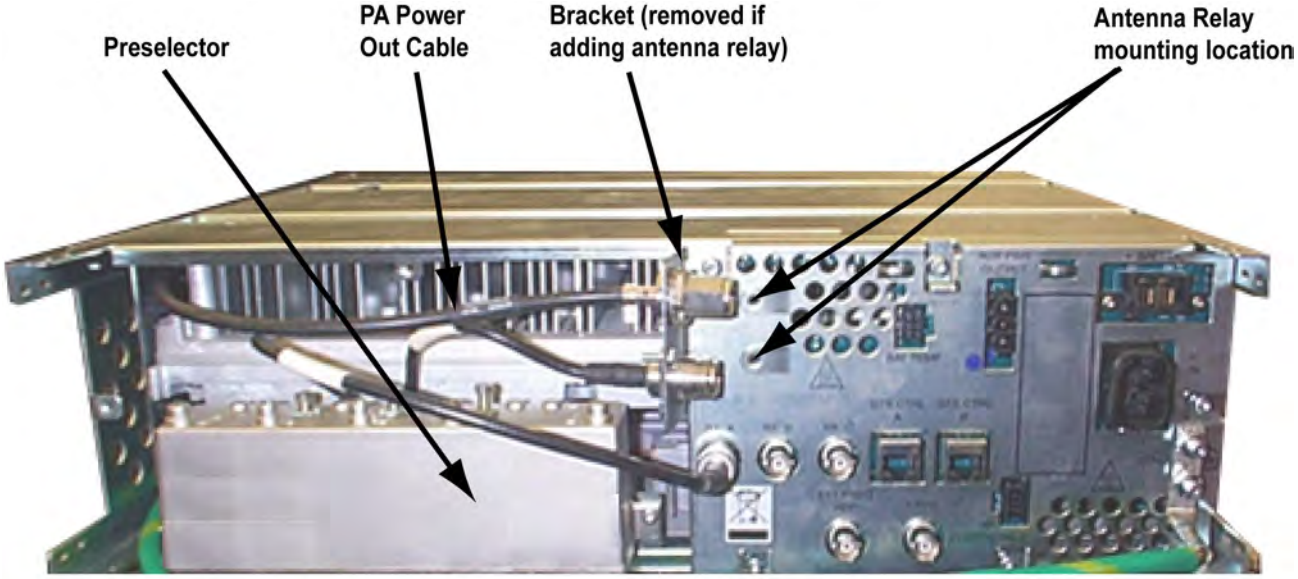

Antenna_Relay_Mounting_Location

Figure 27: Antenna Relay Module Mounted on Backplane Cover

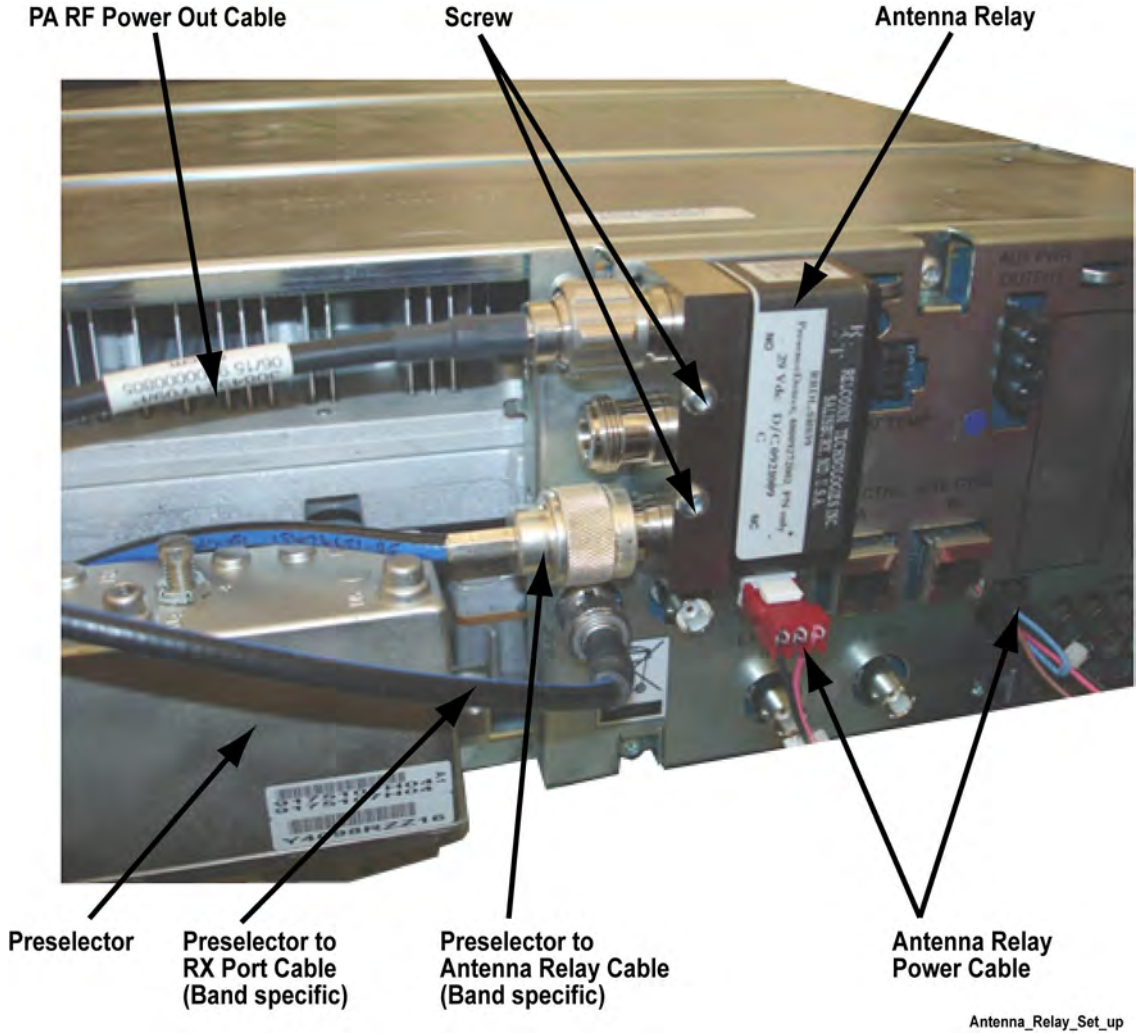

On base radios **equipped** with the peripheral tray, the antenna relay is mounted on the peripheral tray.

Figure 28: Antenna Relay Module Mounted on Peripheral Tray

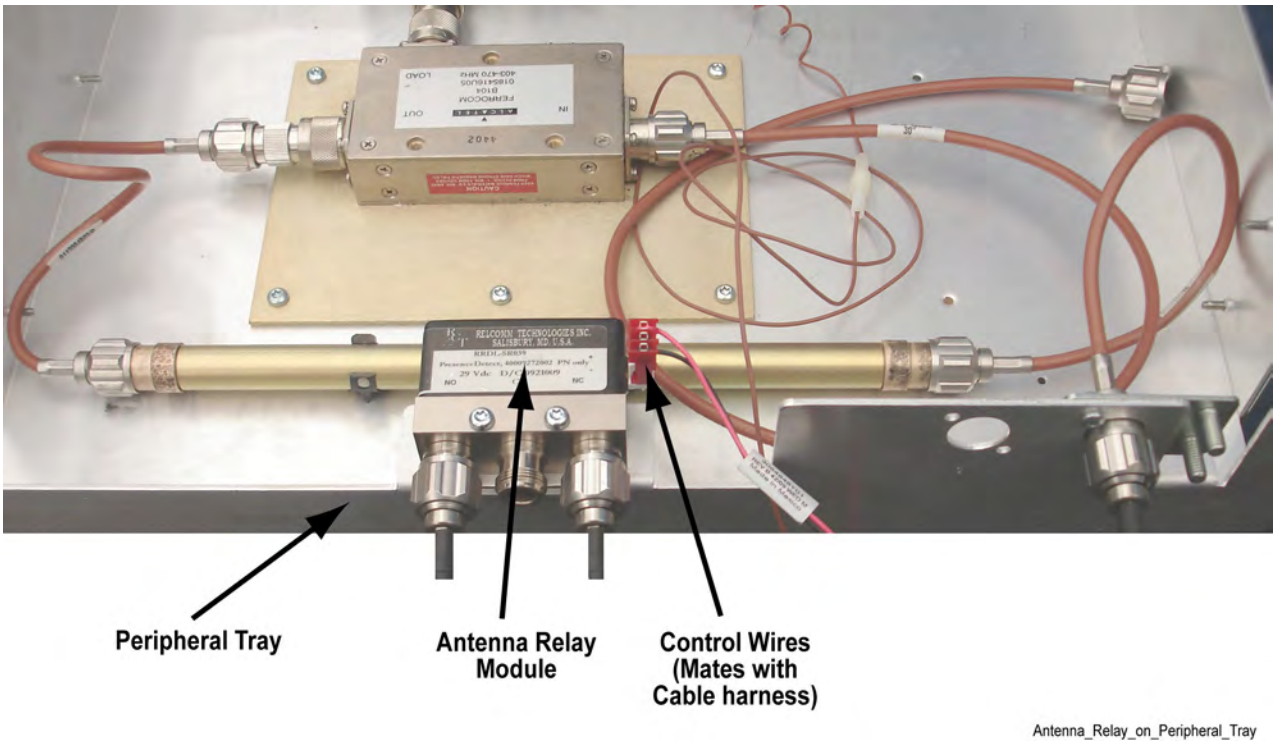

2.3.11.2
Functional Operation

The antenna relay module contains a relay with a set of normally open and normally closed contacts. A signal from the transceiver module controls the relay coil connected to the Receiver input port RX-A or the PA deck to a single transmit/receive antenna.

NOTICE: With the relay de-energized, the antenna is connected to the Receiver input port RX-A. To connect the antenna to the PA deck, the transceiver module must energize the relay.

Figure 29: Functional Block and Interconnect Diagram for Antenna Relay Module (Bracket Mounting)

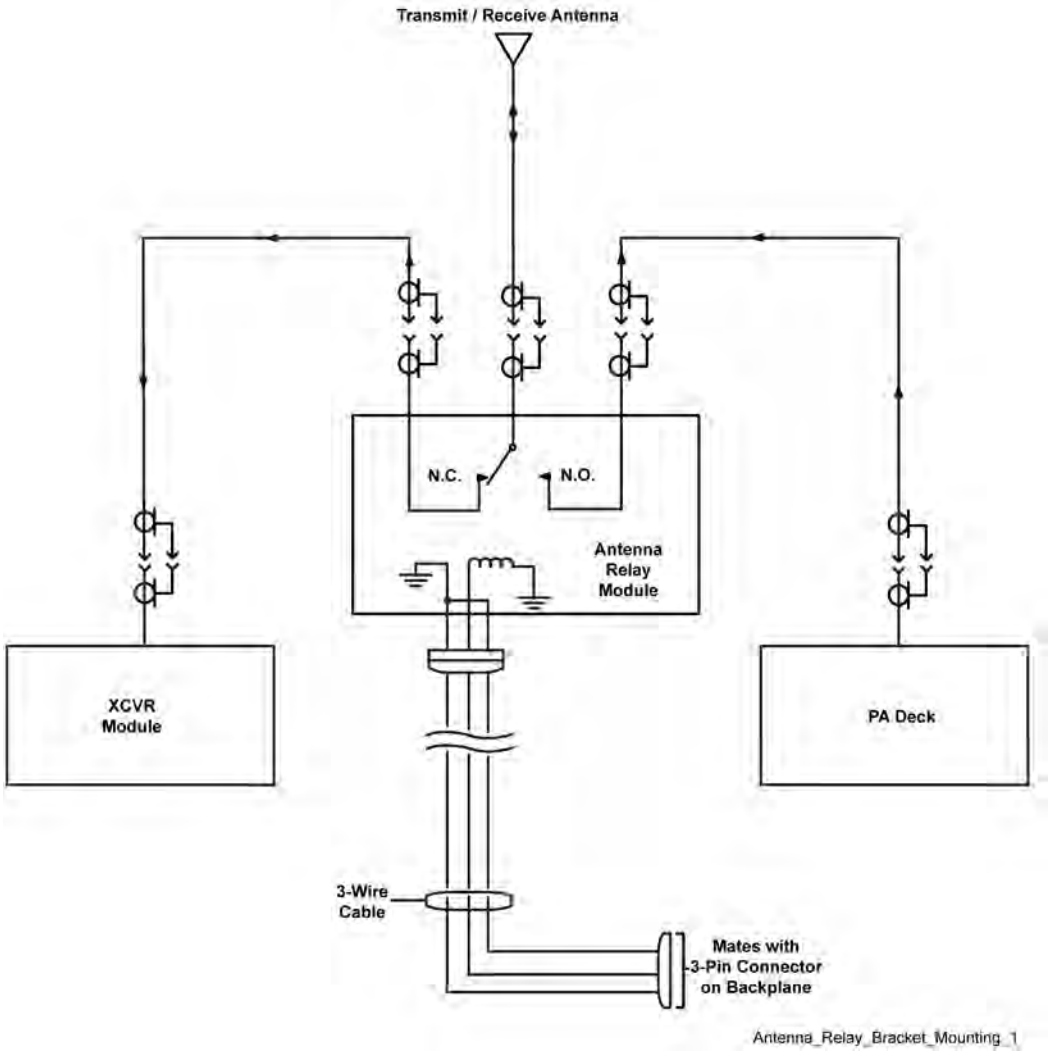

Figure 30: Functional Block and Interconnect Diagram for Antenna Relay Module (Peripheral Tray Mounting)

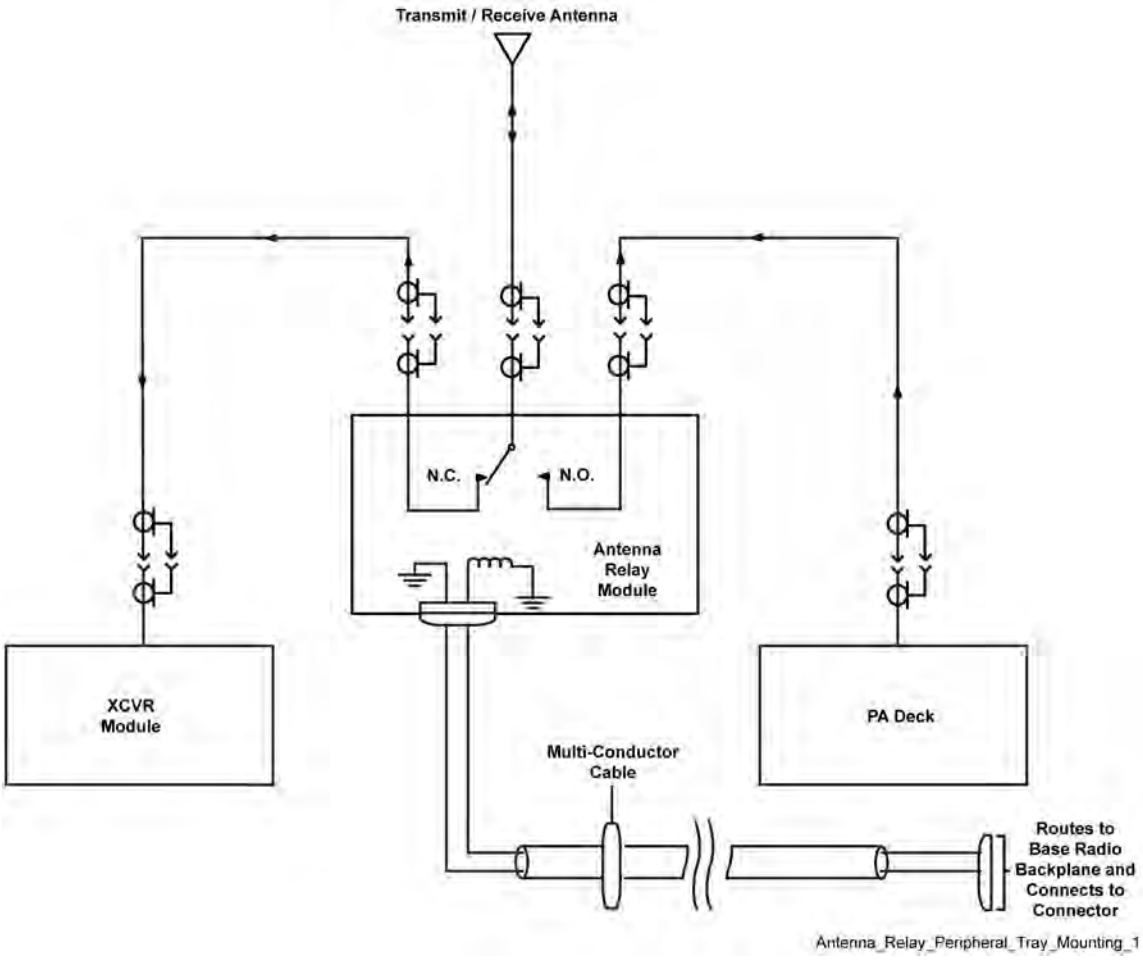

Chapter 3

GTR 8000 Base Radio Installation

This chapter details installation procedures relating to GTR 8000 Base Radio.

3.1 Pre-Installation Tasks

Follow this process to perform the installation tasks. Ensure that you have the following:

- Appropriate cables
- Access to Software Download Manager (SWDL), Configuration/Service Software (CSS), and the Unified Network Configurator (UNC)
- IP/DNS information
- Login and password information

3.1.1 Equipment Installation Process Overview

Process:

1. Prepare the site to comply with the Motorola Solutions requirements and specifications for the equipment, as listed in the *Standards and Guidelines for Communication Sites* manual. The base radio may be installed in a suitable, restricted access, indoor enclosure in any location suitable for electronic communications equipment. Other codes and guidelines that may apply to the location must also be met. See General Safety Precautions on page 83.
2. Inspect and inventory all racks, cabinets, cables, and other equipment with a Motorola Solutions representative to ensure that the order is complete. See General Installation Standards and Guidelines on page 86.
3. Various tools are used to install and service the equipment. If information is needed regarding where to obtain any of the equipment and tools listed, contact the Motorola Solution Support Center (SSC). See General Installation/Troubleshooting Tools on page 92 for a list of general recommended tools for installing and servicing the hardware.
4. Install all equipment using the site drawings and other documents provided by the Field Engineer. Use the installation standards and guidelines for placing and installing equipment.
5. Properly ground all the racks and cabinets to protect against ground faults, electrical surges, and lightning. See GTR 8000 Base Radio Hardware Installation on page 94.
6. Connect all necessary cables within a rack and between the racks for system interconnection. See GTR 8000 Base Radio Rear Connections (Integrated Voice and Data) on page 105, GTR 8000 Base Radio Rear Connections (HPD) on page 108, and GTR 8000 Base Radio Front Connections on page 110.
7. Run a preliminary check of a site before applying power.
8. See Installing Device Software Prerequisites on page 121 for a list of items you need access to before installing the software.
9. See Installing Devices in the UNC on page 124 to discover the base radio and to load OS software images from the UNC.

10 See Device Configuration in CSS on page 134 to program the configurations into the base radio using CSS.

11 See Configuring Centralized Authentication on Devices in VoyenceControl on page 154 to program the base radio using UNC.

3.2 General Safety Precautions

WARNING: Compliance with FCC guidelines for human exposure to Electromagnetic Energy (EME) at Transmitter Antenna sites generally requires that personnel working at a site must be aware of the potential for exposure to EME, and can exercise control of exposure by appropriate means, such as adhering to warning sign instructions, using standard operating procedures (work practices), wearing personal protective equipment, or limiting the duration of exposure. For more details and specific guidelines, see “Appendix A” of the Motorola Solutions *Standards and Guidelines for Communications Sites* manual.

Installation guidelines for compliance with RF exposure regulations

This equipment must be installed and operated at a fixed location, in compliance with all applicable code requirements. The antenna installation must comply with all applicable building and safety codes. In order to ensure optimal communication performance and compliance with applicable RF exposure limits, it is recommended that the antenna is installed outside the building hosting this equipment, on the roof or on a tower if at all possible.

It is the licensee or site owner responsibility to establish an RF exposure safety program meeting the applicable regulatory requirements concerning RF exposure of working personnel and the general public, implementing actions such as site survey measurements and computational analysis, signage and barriers, site access restrictions, as needed.

General safety precautions during all phases of operation, service, and repair

Observe the following general safety precautions during all phases of operation, service, and repair of the equipment described in this manual. Follow the safety precautions listed and all other warnings and cautions necessary for the safe operation of all equipment. See the appropriate section of the product service manual for additional pertinent safety information. Due to the danger of introducing additional hazards, do not install substitute parts or perform any unauthorized modifications of equipment.

NOTICE: The installation process requires preparation and knowledge of the site before installation begins. Review installation procedures and precautions in the Motorola Solutions *Standards and Guidelines for Communications Sites* manual before performing any site or component installation.

Always follow all applicable safety procedures, such as Occupational Safety and Health Administration (OSHA) requirements, National Electrical Code (NEC) requirements, local code requirements, and safe working practices. Also, all personnel must practice good judgment. General safety precautions include the following:

- Read and follow all warning notices and instructions marked on the product or included in this manual before installing, servicing, or operating the equipment. Retain these safety instructions for future reference.
- If troubleshooting the equipment while power is on, be aware of the live circuits.
- Do not operate the radio transmitters unless all RF connectors are secure and all connectors are properly terminated.
- Ground all equipment properly in accordance with the Motorola Solutions *Standards and Guidelines for Communications Sites* manual and specified installation instructions for safe operation.
- Slots and openings in the cabinet are provided for ventilation. Do not block or cover openings that protect the devices from overheating.

- Only a qualified technician familiar with similar electronic equipment should service equipment.
- Some equipment components can become hot during operation. Turn off all power to the equipment and wait until sufficiently cool before touching.
- Maintain emergency first aid kits at the site.
- Direct personnel to call in with their travel routes to help ensure their safety while traveling between remote sites.
- Institute a communications routine during certain higher risk procedures where the on-site technician continually updates management or safety personnel of the progress so that help can be dispatched if needed.
- Never store combustible materials in or near equipment racks. The combination of combustible material, heat, and electrical energy increases the risk of a fire safety hazard.
- Equipment installed at the site meeting the requirements of a "restricted access location," per UL60950-1, is defined as follows: "Access can only be gained by service persons or by a user who has been warned about the possible burn hazard on equipment metal housing. Access to the equipment is by using a tool or lock and key, or other means of security, and is controlled by the authority responsible for the location."

WARNING: Burn hazard. The metal housing of the product may become extremely hot. Use caution when working around the equipment.

Figure 31: Warning Label on Hot Modules

WARNING: DC input voltage must be no higher than 60 VDC. This maximum voltage includes consideration of the battery charging "float voltage" associated with the intended supply system, regardless of the marked power rating of the equipment. Failure to follow this guideline may result in electric shock.
RF energy burn hazard: disconnect power in the cabinet to prevent injury while disconnecting and connecting antennas.

CAUTION: All Tx and Rx RF cables outer shields must be grounded per Motorola Solutions *Standards and Guidelines for Communications Sites* manual requirements.
All Tx and Rx RF cables must be connected to a surge protection device according to the Motorola Solutions *Standards and Guidelines for Communications Sites* manual. Do not connect Tx and Rx RF cables directly to an outside antenna.

IMPORTANT: All equipment must be serviced by Motorola Solutions-trained personnel.

3.2.1
GTR 8000 Base Radio Supplemental Safety Installation Requirements

The Supplemental Safety and Installation Requirements include the following:

- The GTR 8000 Base Radio must be installed in a suitable, in-building enclosure. A restricted access location is required when installing this equipment into the end system.
- The base radio contains a Class 1 built-in power supply component. This component is equipped with an appliance inlet for connecting to an AC input, as well as DC input terminals which meet SELV DC circuit requirements.

- When installing the equipment, all requirements of relevant standards and local electrical codes must be fulfilled.
- The maximum operating ambient temperature of this equipment is 60 °C. The maximum operating altitude is 3000 meters above sea level.
- The 28.6 VDC output from the power supply to the PA is at an energy hazard level (exceeds 240 VA). When installing into the end system, care must be taken so as not to touch the output wires.
- When the base radio is used in a DC reverting system, the DC power supply must be located in the same building as the base radio, and it must meet the requirements of a SELV circuit.

3.2.2
DC Mains Grounding Connections

CAUTION: This equipment is designed to permit the connection of the grounding conductor of the DC supply circuit to the grounding conductor at the equipment. If this connection is made, you must meet all following conditions:

- Connect this equipment directly to the DC supply system grounding conductor or to a bonding jumper from a grounding terminal bar or bus in which the DC supply system grounding electrode conductor is connected.
- Locate this equipment in the same immediate area (such as adjacent cabinets) as any other equipment that has a connection between the grounded conductor of the same DC supply circuit and the grounding conductor (and also the point of grounding of the DC system). Do not ground the DC system elsewhere.
- Locate the DC supply source within the same premises as the equipment.
- Do not install switching or disconnecting devices in the grounded circuit conductor between the DC source and the point of connection of the grounding conductor.

3.2.2.1
Disconnect Device Permanently Connected

Incorporate a readily accessible disconnect device (circuit breaker or switch) in the building installation wiring.

3.2.2.2
Multiple Power Sources

This product has multiple power sources. If service requires the removal of a power source, disconnect all inputs (AC and DC power) to remove power completely from the equipment before servicing.

3.2.2.3
Connection to Primary Power

For supply connections, use wires rated for at least 75°C (167°F).

3.2.2.4
Replaceable Batteries

WARNING: Risk of explosion if you replace a battery with an incorrect type. Dispose of used batteries according to the instructions.

3.2.3
Maintenance Requiring Two People

Identify maintenance actions that require two people to perform the repair. Two people are required when:

- A repair involves the risk of injury that would require one person to perform first aid or call for emergency support. An example is work around high-voltage sources. If an accident occurs to one person, another person may be required to remove power and call for emergency aid.
- Heavy lifting is involved. Use the National Institute of Occupational Safety and Health (NIOSH) lifting equation to determine whether one or two persons are required to lift a system component when it must be removed and replaced in its rack.

3.2.4
Equipment Racks

Lift equipment racks without the use of lifting equipment only when sufficient personnel are available to ensure that regulations covering health and safety are not breached. Use an appropriately powered mechanical lifting apparatus for moving and lifting the equipment racks. In addition, comply with any local regulations that govern the use of lifting equipment.

For installation of the cabinet version of the GTR 8000 Base Radio, see Cabinet Version of the GTR 8000 Base Radio on page 94.

WARNING: Crush Hazard could result in death, personal injury, or equipment damage. Equipment racks can weigh up to 360 kg (800 lb). See the following instructions for proper lifting procedures.

3.3
General Installation Standards and Guidelines

This section provides guidelines to ensure a quality installation. Review these guidelines before unpacking and installing the system. Additionally, review the installation information in the *Standards and Guidelines for Communication Sites* manual for more details, including:

- Equipment installation
- Antenna installation

Review installation information specifically for GTR 8000 Base Radios and subsystems in GTR 8000 Base Radio Hardware Installation on page 94.

3.3.1
General Site Preparation Overview

Perform the activities listed in this table to ensure proper site preparation. The table references specific chapters in the Motorola Solutions *Standards and Guidelines for Communication Sites* manual for more information.

Table 32: Activities for Site Preparation

Activity	Description of Activity	Chapter Reference
Review the site plan.	• Prevents potential on-site and off-site interference by local trunked systems.	• Chapter 2 "Site Design and Development"

Activity	Description of Activity	Chapter Reference
	• Minimizes cable lengths. • Determines the location of telecom equipment.	
Determine site access and security.	Outlines of site access and security measures.	• Chapter 2 "Site Design and Development"
Review safety considerations.	Outlines general, installation, and environmental safety guidelines and requirements and OSHA-related considerations.	• Chapter 3 "Communications Site Building Design and Installation"
Schedule installation of telephone service.	Ensures options and functions of on-site, two-way communications for personnel safety and maintenance.	• Chapter 3 "Communications Site Building Design and Installation"
Review grounding specifications.	Ensures that the site meets or exceeds the Quality Audit Checklist in Appendix F as well as the Power and Grounding Checklist in Appendix D.	• Appendix D. “Grounding (Earthing) Electrode System Testing/ Verification” • Appendix F. “R56 Compliance Checklist”
Schedule installation of site power.	Covers grounding, power sources, and surge protection.	• Chapter 4 "External Grounding (Earthing)" • Chapter 5 "Internal Grounding (Earthing)" • Chapter 6 "Power Sources" • Chapter 7 "Surge Protective Devices"

3.3.2
General Equipment Inspection and Inventory Recommendations

Take an inventory of all equipment with a Motorola Solutions representative to ensure that the order is complete. Carefully inspect all equipment and accessories to verify that they are in good condition. Promptly report any damaged or missing items to a Motorola Solutions representative.

CAUTION: Do not tamper with factory configuration settings for these devices. These settings include software configuration, firmware release, password, and physical connections. Motorola Solutions has configured and connected these devices to meet specific performance requirements. Tampering with these devices may result in unpredictable system performance or catastrophic failure.

3.3.3
General Placement and Spacing Recommendations

When placing equipment at a site, perform the following:

- Place each rack on a firm, level, and stable surface, and bolt the racks together.
- Use correct mounting hardware and shims to prevent rack movement.

- Use strain relief when installing and positioning cables and cords to help ensure that no interruption of service occurs.
- Provide an appropriate amount of space around all components to allow for proper air flow, cooling, and safe access to equipment.
- Locate the site racks and other equipment with enough spacing to allow access for service.

  NOTICE: Proper spacing of equipment is essential for ease of maintenance and safety of personnel. Spacing requirements have been established to meet the National Fire Protection Associations (NFPA) code, and the American Society of Heating, Refrigerating, and Air Conditioning Engineers (ASHRAE) standards. Adhere to any local regulations that apply to the installation.
- Locate the system in an area free of dust, smoke, and electrostatic discharge (ESD).
- See the Motorola Solutions *Standards and Guidelines for Communication Sites* manual for details on these space requirements.

3.3.4
General Cabinet Bracing Recommendations

Use all supplied bracing hardware when installing a rack or cabinet, and secure all equipment within a rack or cabinet.

If additional equipment is installed, see the system design document the field engineer provided, or consult the Motorola Solutions Field Representative.

Subsystem cabinets are self-supporting structures. In areas subject to seismic activity, additional bracing of the cabinet may be required to prevent it from tipping. However, the bracing hardware must be locally procured. No specific procedures are provided within this manual for bracing cabinets in active seismic areas. See the Motorola Solutions *Standards and Guidelines for Communication Sites* manual for details on seismic conditions.

3.3.5
Mounting Cabinets or Racks to a Floor

When and where to use: Perform the following steps to properly install a cabinet or open rack within a site building. Secure the cabinets and racks to the floor for optimum stability. This procedure is written so that the cabinet or rack is moved only once.

Procedure:

1. Carefully mark the mounting holes with a pencil, as indicated on the appropriate cabinet or rack footprint.
2. Drill the marked mounting holes to the appropriate depth of the mounting hardware with a hammer drill and bit.
3. Insert an anchor into the drilled hole. If necessary, tap the anchor into place using a hammer.
4. For cabinets, remove the four screws securing the bottom kick panel to the front and back of the cabinet. Remove the kick panel and set aside during installation.
5. Carefully move the cabinet or rack into the position indicated by the holes in the floor.

   WARNING: Equipment cabinets and racks are heavy and may tip. Use extreme caution when moving. Lift from top eyenuts with the appropriate apparatus, or secure the cabinet or rack from tipping if lifting from the bottom. Failure to do so could result in death or serious injury or equipment damage.
6. Adjust and level the cabinet or rack as necessary to position the cabinet mounting holes with the pre-drilled holes.

7 Secure the cabinet or rack to the site floor with the locally procured mounting hardware.

IMPORTANT: If securing the cabinet or rack to a concrete floor, use 1/2-inch grade 8 bolts with anchors.

3.3.6
General Bonding and Grounding Requirements

Cabinets and racks include a Rack Grounding Bar (RGB) with the capacity to terminate numerous ground wires. Attach equipment added to the cabinet or rack to the ground bar using solid or stranded 6 AWG copper wire.

The RGB uses dual-hole lugs to terminate ground wires. The minimum number of dual-hole attachments is system-dependent and specified by the customer. This bar provides electrical continuity between all bonds and ground wire with a current-carrying capacity equal to or exceeding that of a 6 AWG copper wire.

See the Motorola Solutions *Standards and Guidelines for Communication Sites* manual for more information on proper bonding and ground at a site.

3.3.7
General Cabling Requirements

Diagrams for cabling are typically included in the system-specific configuration documentation Motorola Solutions provides.

Also see the Motorola Solutions *Standards and Guidelines for Communication Sites* manual for cabling standards.

IMPORTANT: System certification was completed using shielded cables. To prevent emission problems, use only shielded cables. Do not substitute other cable types.

- Position the equipment to avoid excessive tension on cables and connectors. Cables must be loose with absolutely no stress on the connectors. Careful cable routing and securing the cables with tie wraps (or other devices) is one way to provide this protection. Set up preventive maintenance loops.
- Dress the cables neatly using cable ties. Do not tighten the cable ties until you are sure that the required service length and bend radius requirements are met. Leave cable ties loose enough to allow adjustment.
- Verify that all cables are properly labeled to match System-specific configuration documentation Motorola Solutions provided.
- Ensure that cables do not exceed the minimum bend radius as outlined in the Motorola Solutions *Standards and Guidelines for Communication Sites* manual.

CAUTION: Use only Category 5 Shielded Twisted Pair (or higher) for cabling Ethernet connections. Motorola Solutions has engineered this system to meet specific performance requirements. Using other cabling and connectors may result in unpredictable system performance or catastrophic failure.

NOTICE: For more information on cabling guidelines, see the documentation supplied with components from each equipment manufacturer.

3.3.8
General Power Guidelines and Requirements

See the Motorola Solutions *Standards and Guidelines for Communication Sites* manual for information on providing electrical service, power budgeting, selecting batteries, and other topics for supplying power at the site.

Perform electrical installation work in accordance with the current edition of the NFPA 70 and local building codes. Where required, use a qualified and licensed electrician for all electrical installations.

3.3.8.1
General AC Power Guidelines and Requirements

The Motorola Solutions *Standards and Guidelines for Communication Sites* manual defines the guidelines and requirements for cabinets and racks which house equipment that requires AC power input. Some of the guidelines and requirements are as follows:

- The cabinet or rack is designed to accept 120/240 V, single-phase power with an amperage service size as required by the electronic equipment.
- Cabinets and racks powered by commercial power must be equipped with a Nationally Recognized Test Laboratory (NRTL) certified power distribution module that contains a main circuit breaker or individual circuit breakers of the correct size as required for the electronic equipment or as the customer specified.
- A decal showing an electrical schematic of the power wiring is affixed to the inside surface of the cabinet.
- All AC power equipment and electrical components must conform to National Electrical Manufacturers Association (NEMA) and National Electrical Code (NEC). The AC power equipment must also be listed by an NRTL.
- A surge arrestor, designed to protect equipment systems from a 120/240 V service and load center, is placed on the power feed ahead of all individual load center circuit breakers. This gapless arrestor must be listed by an NRTL for the purpose intended.
- Selection of a surge arrestor is based on the susceptibility of the equipment powered by the electrical service, with margin provided for locally generated disturbances. See ANSI/IEEE C62.41 (21) for more details.
- At least one 120 VAC, 15 A duplex convenience outlet equipped with Ground Fault Interrupter (GFI) protection must be provided in the electronic equipment compartment.

CAUTION: Do not use surge/transient suppressors without careful and expert power system analysis.

NOTICE: Redundant devices could be terminated on different AC main phases so that a single phase failure does not result in a power loss for both devices.

3.3.8.2
General Breaker Recommendations

To ensure that a fault which causes the breaker to open does not result in the loss of multiple transmit channels, each power supply should have its own supply breaker. The breaker recommendations for AC and DC supply breakers are as follows:

- For a 120 VAC, 60 Hz application, the AC supply breaker must be rated for a continuous current of 20 A. For a 220 VAC, 50 Hz application, the AC supply breaker must be rated for a continuous current of 10 A minimum, not to exceed 20 A.
- Individual DC breakers are not used. For information involving the sizing of cables and DC power distribution, see the *Standards and Guidelines for Communication Sites* manual.
- Site installation must include a single current interrupting device on the DC input distribution (fuse or circuit breaker) rated for the application loading, not to exceed 200 A. For each standalone device, the DC supply breaker should be rated for a continuous current of 25 A.

3.3.8.3
General Battery Installation Recommendations

Position the batteries and charger as closely as possible to the rectifier system using the cables. Use a heavy gauge stranded cable to minimize voltage drop. Examples of the resistance of some heavy gauge wire are:

Table 33: Heavy Gauge Wire Resistance Examples

Gauge	Resistance
#6 gauge	0.3951 /1000 ft
#4 gauge	0.2485 /1000 ft
#2 gauge	0.1563 /1000 ft

The maximum voltage drop can be calculated by knowing the peak current the radio system draws. Use the following formula:

Total Voltage drop = [Ω/1000 ft] x [total loop length (ft)] x [Ipeak (A)] + [connector(s) voltage drop(s)]

See DC Power Connection Wire Gauge Calculations for Integrated Voice and Data on page 101 and DC Power Connection Wire Gauge Calculations for HPD on page 102 for additional guidelines on the cable sizing.

3.3.9
General Electrostatic Discharge Recommendations

Electronic components, such as circuit boards and memory modules, can be sensitive to Electrostatic Discharge (ESD). Use an antistatic wrist strap and a conductive foam pad when installing or upgrading the system.

If an ESD station is not available, wear an antistatic wrist strap. Wrap the strap around the wrist and attach the ground end (usually a piece of copper foil or an alligator clip) to an electrical ground. An electrical ground can be a piece of metal that literally runs into the ground (such as an unpainted metal pipe), or the metal part of a grounded electrical appliance. An appliance is grounded if it has a three-prong plug and is plugged into a three-prong grounded outlet.

NOTICE: Do not use a computer as a ground, because it is not plugged in during installation.

3.3.10
FCC Requirements

Radio frequency (RF) transmitters installed at sites within the US must be in compliance with the following FCC regulations:

- The station licensee is responsible for the proper operation of the station at all times and is expected to provide observations, servicing, and maintenance as often as may be necessary to ensure proper operation.
- The transmitter ERP must not exceed the maximum power specified on the current station authorization.
- The frequency of the transmitter must be checked during initial installation of the transmitter, when replacing modules, or when making adjustments that affect the carrier frequency or modulation characteristics.

3.3.11
Networking Tools

Use the following networking tools for installing and servicing the network:

- Fluke® OneTouch Assistant LAN tester
- NiMH rechargeable battery for Fluke
- T1/E1 or E1 test set (such as the Hewlett-Packard® HP37702A)
- Serialtest® software with the ComProbe® and SerialBERT option

3.3.12
General Installation/Troubleshooting Tools

If information is needed regarding where to obtain any of the equipment and tools listed, contact the Motorola Solutions Support Center (SSC). See Motorola Solutions Support Center on page 219.

3.3.12.1
General Tools

Use the following general tools to install, optimize, and service equipment in the system:

- 150 MHz 4 Channel Digital Storage Oscilloscope
- Transmission Test Set (TIMS Set)
- Aeroflex 3900 Series Service Monitor or equivalent
- 50 Ohm Terminated Load
- Digital Multimeter (DMM)
- Terminal Emulation Software
- DB-9 Straight through serial cable
- RS-232 Cables with Connectors
- Punch Block Impact Tool
- MODAPT – RJ-45 Breakout Box
- Remote RJ-11/ RJ-45 Cable Tester (1200 ft length maximum)
- PC Cable Tester (RG-58, 59, 62, BNC, RJ-45, RJ-11, DB-9, DB-15, DB-25, Centronics 36-pin connectors)
- ESD field service kit
- Amprobe Instruments GP-1 Earth Tester
- AEMC 3730 Clamp-on Ground Resistance Tester

3.3.12.2
Rack Tools

Use the following tools to install, optimize, and service the equipment:

- Service Monitor: Aeroflex 3900 Series Service Monitor with P25 Options installed (plus High Performance Data (HPD) and Time Division Multiple Access (TDMA) options as required)
- Personal Computer meeting the following specifications:
  - Operating Systems:

    + Windows 10 (Server 2012 R2)
- Hardware Requirements:
  - Processor:
    + 1 GHz or higher Pentium grade
  - Processor Memory:
    + 2 GB RAM recommended for Windows 10
  - Hard Disk Space:
    + 300 MB minimum free space (for a Typical Installation, including Help Text and Software Download Manager) or 100 MB minimum free space (for a Compact Installation)
  - Peripherals:
    + Microsoft Windows supported mouse or trackball
    + Microsoft Windows supported serial port for product communication
    + Microsoft Windows supported Ethernet port for product communication
    + Microsoft Windows supported printer port for report printing
    + CD-ROM for software installation
- Configuration/Service Software (CSS) DLN6455
- CSS serial programming cable
- Ethernet cable
- Antenna tester
- 50 Ohm terminated load
- Rohde & Schwarz NRT-Z14 Directional Power Sensor, 25-1000 GHz, 0.1-120 W. Recommended for all uses when a service monitor is not available.

3.3.13
Technical Support for Installation

Technical support is available from the site-specific documents the Field Engineer or Motorola Solutions Field Representative provided for the system, one of the Motorola Solutions Support Centers (SSC), or qualified subcontractors.

- SSC can help technicians and engineers resolve system problems and ensure that warranty requirements are met. Check your contract for specific warranty information. See Motorola Solutions Support Center on page 219.
- The Motorola Solutions System Service Subcontractor Assessment program ensures that service people contracted by Motorola Solutions meet strict minimum requirements before they can work on any system. For more information on this program, contact the Motorola Solutions representative.

3.3.13.1
Site-Specific Information

When the Motorola Solutions Center for Customer Solution Integration (CCSi) stages a system, the Field Engineer assigned to the system creates all site-specific system documentation to document how the system was staged. Site-specific information includes the following:

- Site design drawings showing the location of racks, cabinets, cable trays, and other components
- Rack drawings showing the location of the equipment in each rack
- Cable matrix in a table format that shows each cable and its connections

- Interconnect wiring diagrams to show the cable connections between devices
- Pre-programmed parameters of each site component
- Templates used to program each device
- All firmware and software revisions of each site component
- Test data from each device that requires operational verification
- Optimization requirements and settings of each electrical path
- Acceptance Test Plan for the site components

NOTICE: Maintain this site-specific information to reflect the current site configuration and layout for the system.

3.4 GTR 8000 Base Radio Hardware Installation

The following is information specific to GTR 8000 Base Radios.

3.4.1 Placement and Spacing

Cabinets and racks allow equipment to be added to a site. Always consider room for expansion when setting up a site. Cabinets or racks may be installed next to each other or to other equipment. However, provide all cabinets and racks with sufficient floor space to permit access for installation and service.

Clearance required for service and installation is at least 2 ft in the front and rear.

Front access:

- At least 2 ft floor access in front of the cabinet or rack.

Side and rear access:

- At least 2 ft floor access at the rear of the cabinet or rack, or
- At least 2 ft access on at least one side of the cabinet or rack, plus 6 inches at the rear of the cabinet or rack.

To maintain this clearance, the following is required:

- If there is less than 2 ft rear access, do not install more than two cabinets or racks side by side, and allow at least 2 ft access on at least one side of each cabinet or rack.
- For the cabinet version, if there is less than 2 ft rear access, do not install the optional rear door on the cabinet.

NOTICE: For the cabinet version, when an eyenut has to be replaced, provide at least 2 ft access to both sides of the cabinet so that both side panels can be removed.

3.4.2 Cabinet Version of the GTR 8000 Base Radio

The GTR 8000 Base Radios are offered with factory cabinet options for mounting flexibility. Two cabinet height options are available:

- 31 in. 15 Rack Units (Option CA02446AA)
- 47 in. 24 Rack Units (Option CA02447AA)

Each cabinet is ordered with a single base radio and Radio Frequency Distribution System (RFDS) equipment pre-installed. Additional base radios and other devices are installed in the cabinet during

field installation. For spacing equipment or placing peripherals between base radios, additional slides rails can be ordered.

The cabinets have knockouts on the top and bottom that provide space and separation of cable types when routing the cables. Follow the Motorola Solutions *Standards and Guidelines for Communication Sites* manual for the multiple knockouts for the different cable types as shown in Figure 33: Cabinet Dimensions on page 96. The doors on both cabinets are provided with standard locks (key# 2135), which come with two keys per lock. Each door can also be detached and mounted on a reverse direction.

3.4.2.1
Floor Mounting the Cabinet Version of the GTR 8000 Base Radio

Securely fasten the cabinet to the floor or other rigid surface capable of supporting the load of the cabinet.

Figure 32: GTR 8000 Base Radio (Cabinet Version) – Floor Mounting Detail

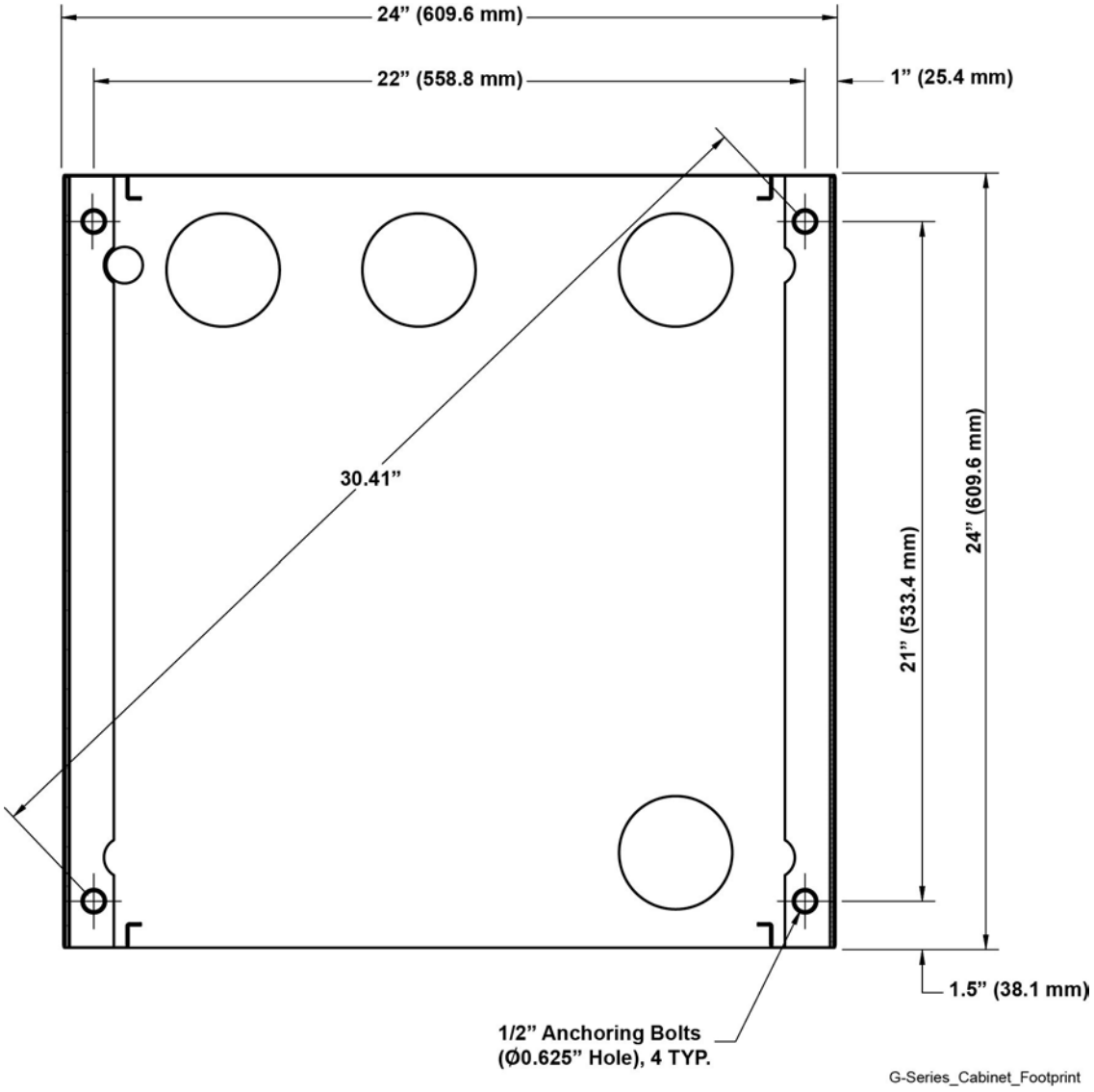

IMPORTANT: The four 5/8 in. holes in the top of the cabinet are for stacking cabinets and are not intended for strength when lifting a cabinet.

3.4.2.2

Physical Dimensions and Clearances of the Cabinet Version of the GTR 8000 Base Radio

The figures show the dimensions for both the 31 in. and 47 in. cabinets. Minimum recommended clearances are 36 in. (front and rear) for installation access.

Figure 33: Cabinet Dimensions

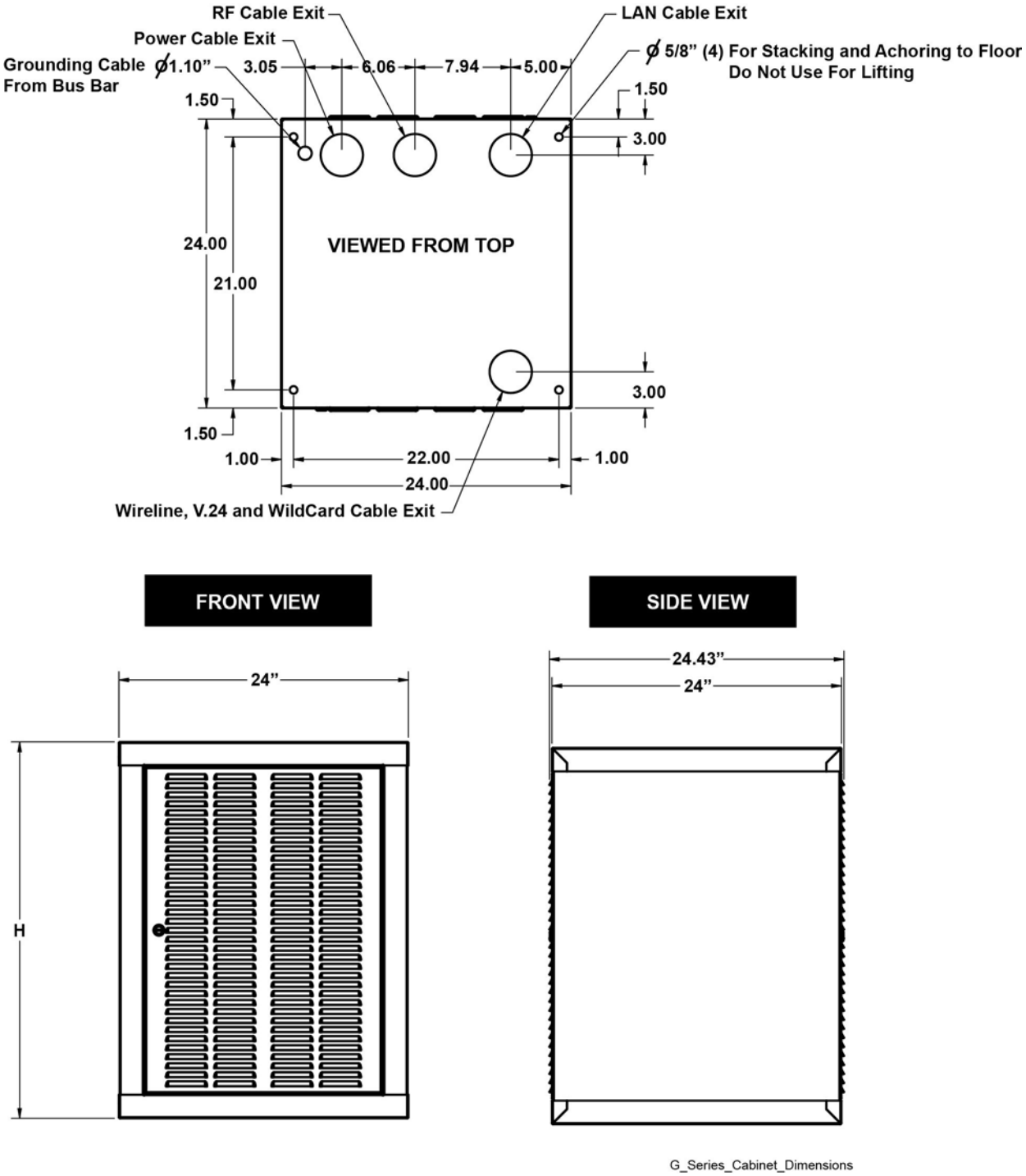

3.4.2.3
Cabinet Mounting Rails

The figures show the dimensions and spacings of the mounting rails inside both the 31 in. and 47 in. cabinets. The mounting rails are square hole and require cage nuts for additional equipment installation.

Figure 34: Cabinet Mounting Rails

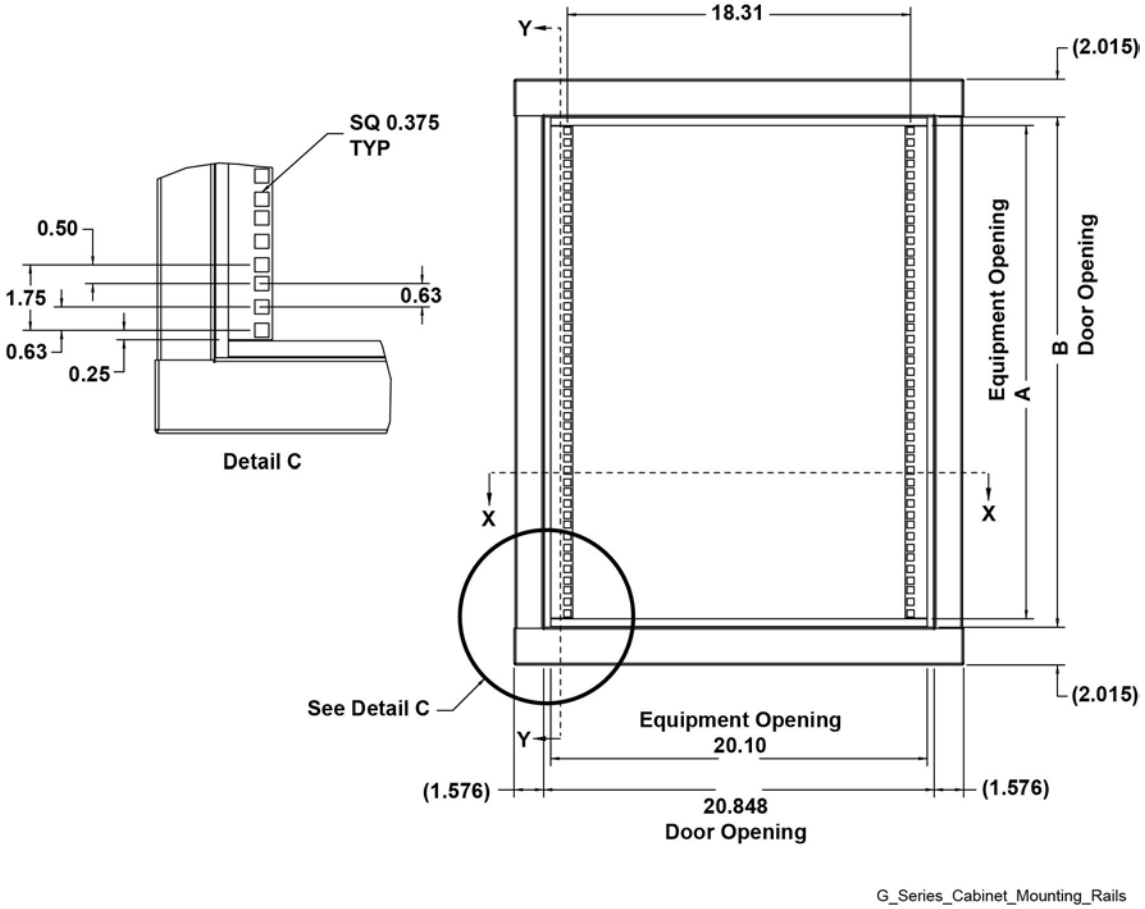

3.4.2.4
Vertical Lifting of Cabinets

Motorola Solutions made no provision to enable the removal of a harness after the equipment has been lifted and placed flat onto a surface. Your organization must provide those provisions.

3.4.2.4.1
Lifting Cabinets Vertically

When and where to use: Use this procedure to lift the cabinet with a harness and place onto a flat surface.

Procedure:

1. Place two temporary supports onto the floor or flat surface. Position the supports to facilitate the removal of harness. See Figure 35: Lifting a Cabinet with a Harness on page 98.

Figure 35: Lifting a Cabinet with a Harness

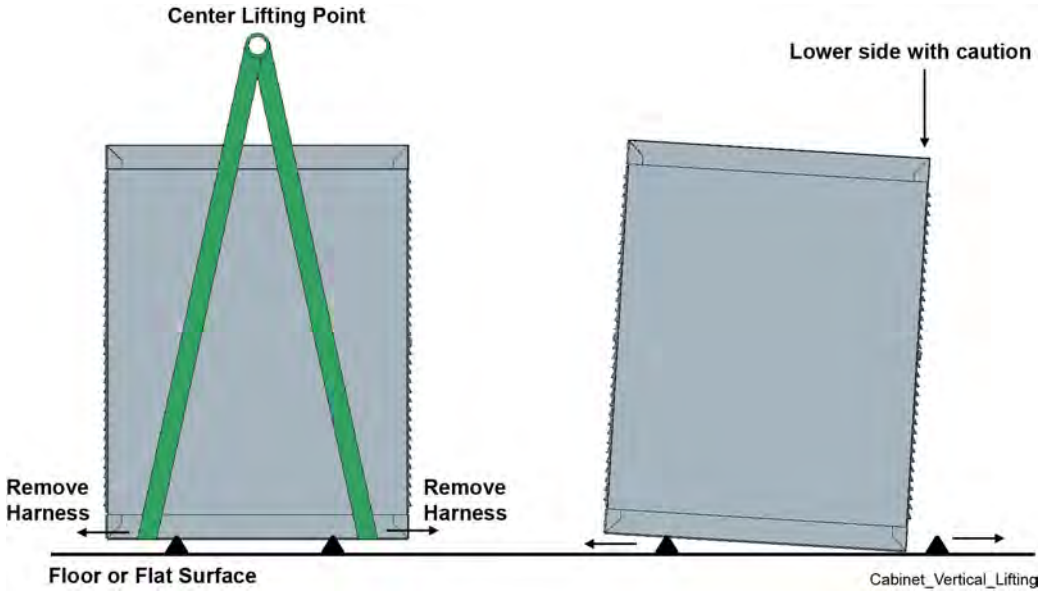

2 Using the harness, lift the cabinet onto the two supports.

3 Remove the harness.

4 Lift one side of the cabinet slightly and remove one of the supports. Carefully lower the cabinet onto the flat surface.

5 Lift the other side of the cabinet slightly and remove the other support. Carefully lower the cabinet onto the flat surface.

3.4.2.5
Removing/Replacing a Cabinet Door

When and where to use: The default orientation of the door hinge is on the right side of the cabinet. Use this procedure to change the hinge to the left side of the cabinet, or to replace a cabinet door.

Procedure:

1 Loosen the M6 fastener and detach the ground cable from the bus bar.

If removing the front cabinet door, the ground cable is detached from the M6 nut in the cabinet body.

Figure 36: Cabinet Door Removal

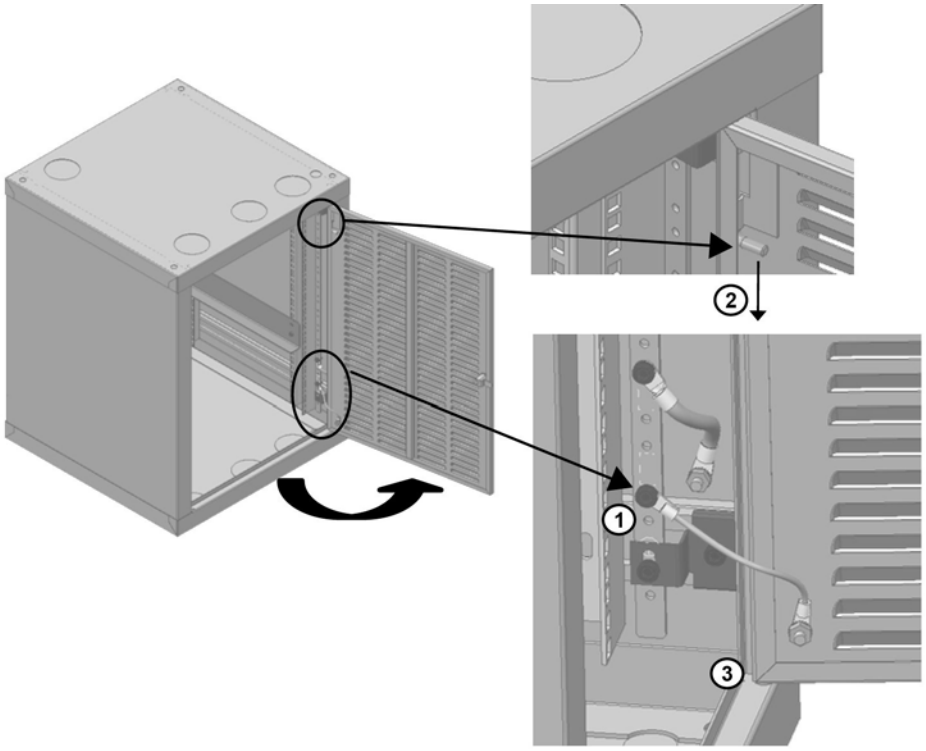

Cabinet_Door_Removal

2 To remove the door, release the spring loaded latch.

3 Lift the door from the pin hinge.

Figure 37: Cabinet Door Replacement

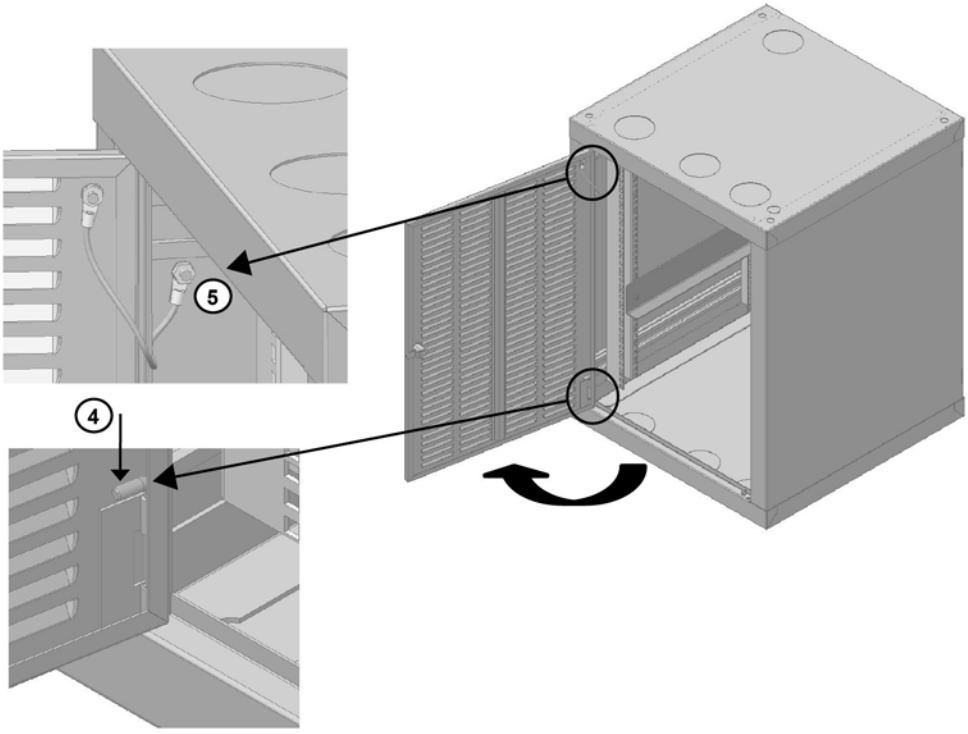

Cabinet_Door_Replacement

4 Flip the door 180° and reattach it to the cabinet with the pin hinge.

5 Reattach the ground cable to the M6 nut in the cabinet body.

3.4.3
Rack Mounting The GTR 8000 Base Radio

Mount the base radio housing in a rack that has been secured to the floor. For open racks, two brackets are required to distribute the weight. Without brackets, the center of gravity of the system shifts to the back, potentially causing structural issues with the rack. The brackets come with the required number of screws.

Figure 38: Base Radio Mounted in Rack

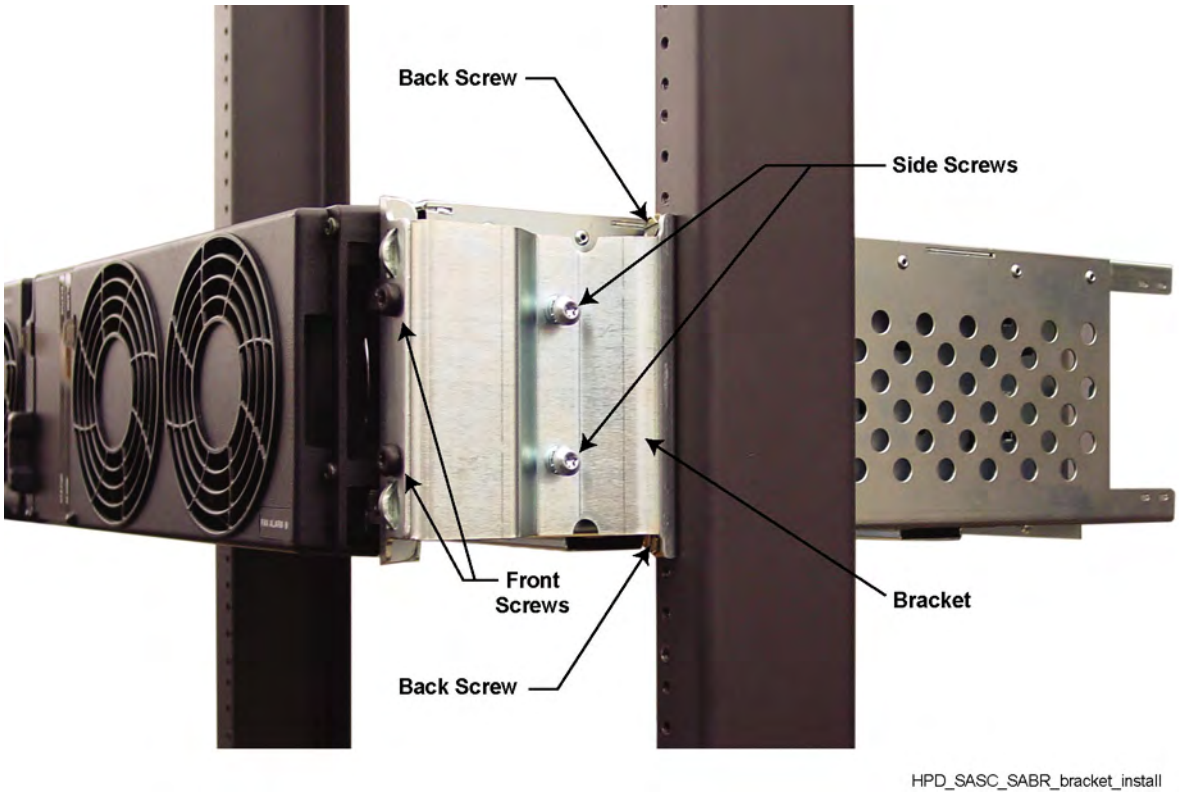

NOTICE: Perform this installation with two people so that one person can hold the device in place while the other person attaches the brackets to the rack.

3.4.3.1
Mounting the GTR 8000 Base Radio

Procedure:

1 Determine where to mount the device on the rack and mark the location. The brackets are useful in making this determination, and the pin on the back of the bracket helps in finding the exact location on the rack.

2 Attach the brackets to the sides of the chassis:

   a Use M6x1x13 machine screws with a captive washer (zinc plated).

   b Screw one bracket into the clinch nuts on the side of the chassis.

   c Screw the second bracket into the clinch nuts on the other side of the chassis.

3. Lift the device into place on the rack using the pins on the brackets to properly line up the device.
4. Attach the two brackets to the rack:
   a. For a Motorola Solutions modular rack, use M6x1x10 thread-forming screws with a black finish.
   b. For a Motorola Solutions open rack, use 1224x5/8 thread-forming screws (zinc plated).
   c. For your own rack, use hardware appropriate for the rack.
   d. Attach the brackets to both sides of the rack through the upper back openings on the brackets.
   e. Attach the brackets to the rack on both sides through the lower back openings.
5. In the front, attach the chassis to the brackets:
   a. Screw two M6x1x10 thread-forming screws (black finish) through the front holes on one side of the chassis and into the bracket.
   b. Screw two M6x1x10 thread-forming screws (black finish) through the front holes on the other side of the chassis and into the bracket.

3.4.4 Connecting Power

This section covers topics on connecting power cables to the base radio, calculating the length of wire for various gauges, and mounting the battery temperature sensor.

3.4.4.1 Connecting Power Cables to a GTR 8000 Base Radio

For standalone base radios, AC and DC inputs, provided by your organization, connect to the power supply through the backplane of the base radio. See GTR 8000 Base Radio Rear Connections (Integrated Voice and Data) on page 105, GTR 8000 Base Radio Rear Connections (HPD) on page 108, and GTR 8000 Base Radio Front Connections on page 110.

3.4.4.2 DC Power Connection Wire Gauge Calculations for Integrated Voice and Data

Because the power supply disconnects itself from the DC input when it senses that DC voltage has dropped to 42 VDC, it is important to minimize the voltage drop in the DC power supply loop (the total length of the 48 VDC hot wire and the DC return wire) to no more than 1 V total. Minimizing the voltage drop ensures that the maximum energy is removed from the battery before disconnecting the power supply from the DC input line.

A base radio transmitting at 100 W draws up to 10 A* current when operating from a 54 V source (nominal 48 VDC system). As voltage decreases (due to the standby battery discharging) the current increases proportionally (because the base radio appears to be a constant power load). At the low voltage disconnect point (42 V for a nominal 48 VDC system), the current is up to 13 A*. If a single pair of 2 AWG wire is used to connect the battery to the back panel, the maximum length of a single conductor would be 75 m (245 ft). Use of smaller gauge wire would reduce this length depending on the resistance of the wire.

* = The actual current value can be calculated from the power consumption value in the specifications tables. See GTR 8000 Base Radio Specifications on page 40.

To determine the maximum length of wire for wire other than 2 AWG, the following relationship can be used:

- Length (m/ft) = V/I/R

where:

- V = voltage drop in one leg of the loop (max = 0.5 V)
- I = current the base radio draws during DC operation
- R = resistance of the wire being considered (in Ohms per ft)

For common wire sizes, the maximum distances shown in Table 34: DC Power Connection Wire Gauge Maximum Distances for an IV and D Site on page 102 apply.

Table 34: DC Power Connection Wire Gauge Maximum Distances for an IV and D Site

AWG	Resistance (ohm/304.8 meter/ 1000 ft)	Maximum Distance (for 13A)
2	0.1563	75 m (245 ft)
3	0.1970	60 m (195 ft)
4	0.2485	47 m (155 ft)
5	0.3133	37 m (120 ft)
6	0.3951	30 m (95 ft)

3.4.4.3
DC Power Connection Wire Gauge Calculations for HPD

Since the power supply disconnects itself from the DC input when it senses that DC voltage has dropped to 42 VDC, it is important to minimize the voltage drop in the DC power supply loop (the total length of the 48 VDC hot wire and the DC return wire) to no more than 1 V total. Minimizing the voltage drop ensures that the maximum energy is removed from the battery before disconnecting the power supply from the DC input line.

A base radio transmitting at 50 W draws up to 7.4 A current when operating from a 54 V source (nominal 48 VDC system). As voltage decreases (due to the standby battery discharging) the current increases proportionally (since the base radio appears to be a constant power load). At the low voltage disconnect point (42 V for a nominal 48 VDC system), the current will be up to 9.5 A. Use of smaller gauge wire would reduce this length depending on the resistance of the wire. To determine the maximum length of wire for wire other than 2 AWG, the following relationship can be used:

- Length (ft) = V/I/R

where:

- V = voltage drop in one leg of the loop (max = 0.5 V)
- I = current drawn by the base radio during DC operation (9.5A)
- R = resistance of the wire being considered (in Ohms per ft)

For common wire sizes, the maximum distances shown in Table 35: Power Connection Wire Gauge Maximum Distances for HPD on page 102 apply.

Table 35: Power Connection Wire Gauge Maximum Distances for HPD

AWG	Resistance (ohm/1000 ft)	Maximum Distance
2	0.1563	102m (335 ft)
3	0.1970	81m (265 ft)
4	0.2485	64m (210 ft)

AWG	Resistance (ohm/1000 ft)	Maximum Distance
5	0.3133	51m (165 ft)
6	0.3951	40m (130 ft)

3.4.4.4

Battery Temperature Sensor Mounting

A 40 ft battery temperature sensor cable is shipped with your device. This three-wire cable carries a voltage signal to the power supply from a sensor element which must be mounted close to the storage battery. Voltage is proportional to the battery temperature and the diagnostic circuitry in the power supply module. The 40 ft cable can be extended to a total length of 190 ft using 50 ft extensions (Motorola Solutions part number 3084827Y04. See Motorola Solutions Support Center on page 219.

Mount the sensing element of the temperature sensor so that it detects the actual battery temperature (or the ambient temperature as close as possible to the batteries being charged). The two examples of mounting are as follows:

Example 1

Use cable ties to attach the sensing cable to the positive (or negative) power cable. A minimum of two cable ties should be used (spaced 6 inches apart), with one of the cable ties not more than 2 inches from the sensing element. Mount the sensing element not more than 2 inches from the battery post where the power cable connects. See Figure 39: Battery Temperature Sensor Example 1 on page 103.

Figure 39: Battery Temperature Sensor Example 1

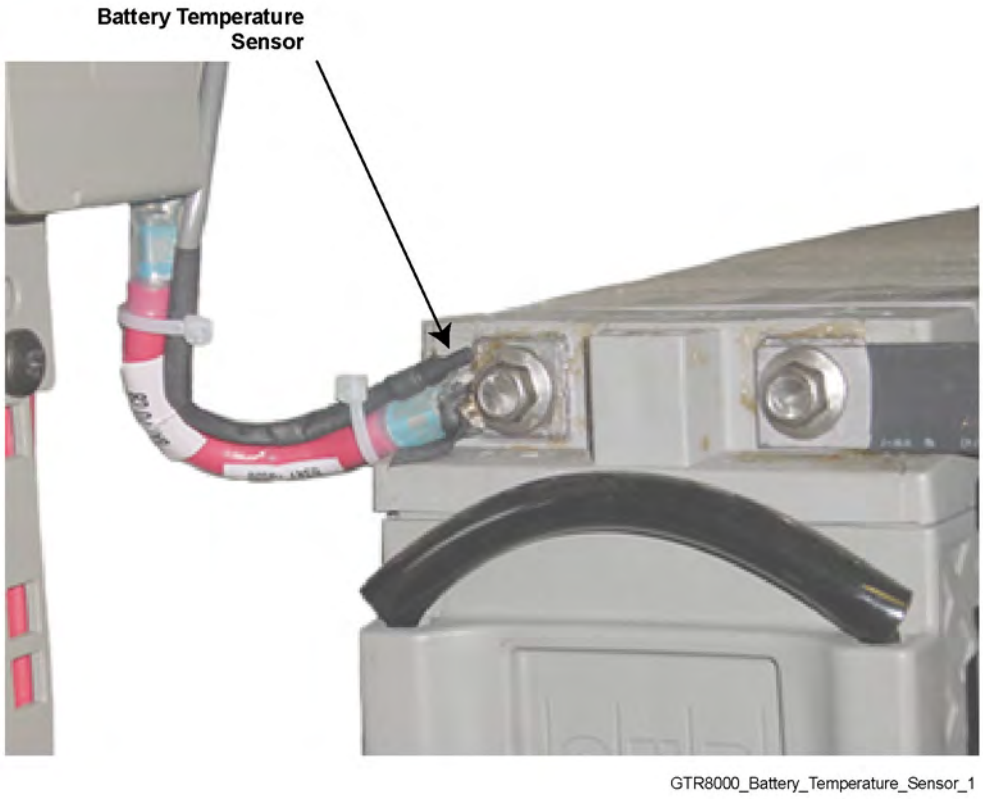

Example 2

Attach the sensing cable to an existing battery tray support bracket using cable ties or nylon loop straps of the proper size. Mount the sensing element not more than 2 inches from the surface of the batteries being monitored. Use a minimum of two cable ties and/or loop straps to secure the sensing cable to the bracket. Place the cable ties/ loop straps no more than 6 inches apart with one placed no more than 2 inches from the sensing element. See Figure 40: Battery Temperature Sensor Example 2 on page 104.

Figure 40: Battery Temperature Sensor Example 2

3.4.5
GTR 8000 Base Radio Grounding

Detailed grounding information is beyond the scope of this manual. See the *Standards and Guidelines for Communication Sites* manual for detailed information about grounding and lightning protection.

IMPORTANT: Ground the battery system, either positive or negative, at the battery. The DC input (battery charger output) of the power supply floats with respect to earth ground. The power supply can therefore be used in either positive ground or negative ground DC systems. Connect the appropriate terminal (+ or -) of the DC system to protective earth at the battery. These instructions assume that all telephone lines, antenna cables, and AC or DC power cables have been properly grounded and lightning-protected.

When rack installations have a primary rack and one or more expansion racks, all these racks must be connected to the same Sub System Ground Bus Bar (SSGB) (with no other rack connected to the SSGB). Grounding ensures that surge events do not produce ground potential differences that affect signals between the racks.

The backplane has a double lug with two lock nuts on the rear panel where the ground wire connects to the backplane on one end, and to the rack grounding bar on the other. The rack grounding bar is connected to the master ground bus bar.

To use the grounding lugs, a length of #6 AWG wire with UL-listed ring lugs is required on both ends. This wire is shipped with the device.

For the cabinet version of the base radio, the rack grounding bar is connected to the SSGB with a provided AWG2 dual hole lug.

Figure 41: Rack Grounding

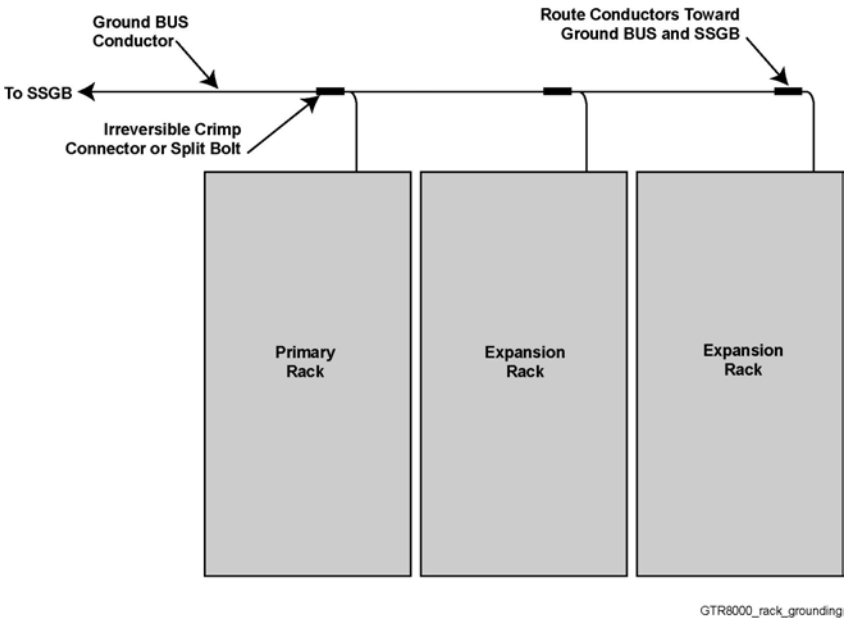

3.4.5.1
Grounding the GTR 8000 Base Radio

Procedure:

1. Connect the ground wire attached to the two grounding lugs at the rear of the base radio to the rack grounding bar.
2. Tighten the ground lock nut to 60 in-lb (6.94 N.m).
3. Connect all other equipment and peripherals to the rack grounding bar.

3.4.6
GTR 8000 Base Radio Rear Connections (Integrated Voice and Data)

The base radio connects to SITE CTRL ports for this channel and to the transmit and receive paths.

Figure 42: Base Radio Integrated Voice and Data Backplane

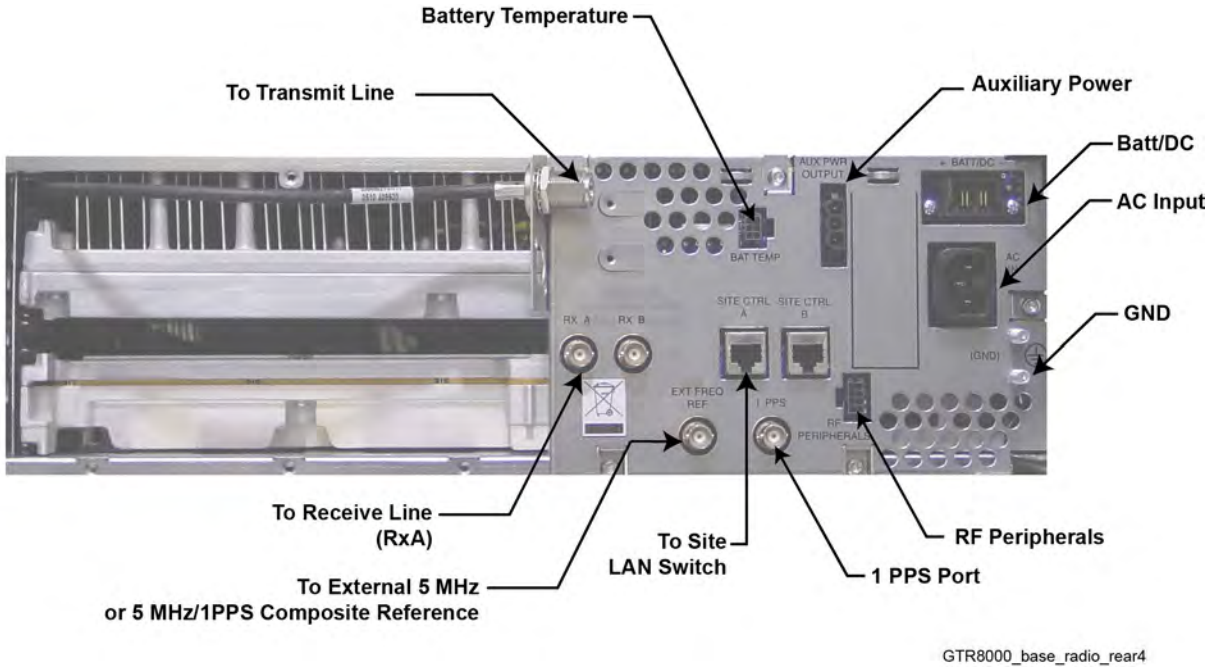

Table 36: Base Radio Backplane Connections for Integrated Voice and Data

Port / Type	Device it connects to:	Port / Type	Description
SC-A port, RJ-45	**Simulcast Site:** Site LAN switch	LAN port, RJ-45	IP interface connection to the site LAN switch port for this channel. An optional SDM RTU device connects to the site LAN switch that is connected to this port.
	ASTRO® 25 repeater site with Less than six GTR 8000 Base Radios, or with a mix of QUANTAR® stations: Site Controller module A	SC A to Base Radio 1-6 port, RJ-45	Connects to site controller A base radio port for this channel. **NOTICE:** The length of the cable between the site controller and the base radio should be no greater than 30 ft.
	ASTRO® 25 repeater site with More than six GTR 8000 Base Radios, or with a mix of QUANTAR® stations: External Site LAN switch or Site Controller module A	LAN port, RJ-45	IP interface connection to the site LAN switch port for this channel or connection to site controller A base radio port for this channel. An optional SDM RTU device connects to the site LAN switch that is connected to this port.
SC-B port, RJ-45	**Simulcast Site:** Not in use		
	ASTRO® 25 repeater site with Less than six GTR 8000 Base Ra-	SC B to Base Radio 1-6	Connects to site controller B base radio port for this channel.

Port / Type	Device it connects to:	Port / Type	Description
	dios, or with a mix of QUANTAR® stations: Site Controller module B	port, RJ-45	**NOTICE:** The length of the cable between the site controller and the base radio should be no greater than 30 ft.
	ASTRO® 25 repeater site with More than six GTR 8000 Base Radios, or with a mix of QUANTAR® stations: External Site LAN switch or Site Controller module B	LAN port, RJ-45	IP interface connection to the site LAN switch port for this channel or connection to site controller B base radio port for this channel. An optional SDM RTU device connects to the site LAN switch that is connected to this port.
RX-A, BNC	Receive line A	BNC	RF coax to receive path for antenna A.
RX-B, BNC	Receive line B	BNC	RF coax to receive path for antenna B. This port is used for dual diversity for TDMA.
Transmit port, N-type	Transmit line	N-type	RF coax to transmit antenna.
Aux Pwr Output	Comparator or Site Controller	Aux Pwr Input	Provides secondary power to a conventional comparator for a conventional base radio, or to the site controller in an ASTRO® 25 repeater site.
Bat Temp, 6-pin	Battery temperature sensor		Connection to temperature sensor, allowing for temperature compensated battery charging.
RF Peripherals	RF peripheral sensor ports		Antenna relay and presence detect, external circulator load temperature (external wattmeter not supported).
Batt/DC	DC power supply or battery	Batt/DC	Input from and output to a 48 VDC power supply or backup battery. When AC power is not available, the device switches to operate from a DC source if the optional DC power (8AWG; length 9 ft), CA01400AA is ordered and installed. One end connects into the Batt/DC port and the other end connects into the DC source. The contacts are 39-83503N02 (AMP #53880-2), the receptacle housings are 15-83502N01 (AMP #53884-1) and the mounting ears are 07-83504N01 (AMP #53887-1). 3084869Y06 cable is used for a positive ground system. 3084869Y02 cable is used for a negative ground system.
AC	120/240 VAC power source.		Input from 120/240 VAC nominal power source.

Port / Type	Device it connects to:	Port / Type	Description
EXT FREQ REF*	TRAK (Simulcast Site Reference)	BNC	**1** In an Analog or ASTRO® 25 simulcast configuration, this input is connected to an external reference signal source (TRAK 9100) to drive an internal oscillator for precise frequency stability. The source can be 5 or 10 MHz. **2** In an ASTRO® 25 simulcast (TRAK 9100) or ASTRO® 25 site repeater (TRAK 9100 or TRAK 8835) configuration, it is used as an input connected to an external reference, which provides a composite 5 MHz + 1 PPS signal source to drive an internal oscillator for precise frequency stability and provides a time reference for precisely launching ASTRO® 25 signals over the air.
1 PPS*	TRAK 9100 (Simulcast Site Reference)	BNC	This input is used when a composite 5 MHz + 1PPS signal source is not used. It is connected to an external 1 PPS time reference source to provide an accurate time source used for precisely launching ASTRO® 25 signals over the air. This input is used in conjunction with EXT FREQ REF option 1.

* See GTR 8000 Base Radio Time and Frequency Inputs on page 157.

NOTICE: The EXT FREQ REF input on the rear of the device is high impedance. Use an external termination to properly terminate the cable connected to the input. It is recommended that a BNC "T" and a 50 Ohm BNC termination is connected to the input to terminate the cable. If the cable is daisy chained (multiple base radios connected together and driven by one TRAK/PSC output), only the last base radio in the chain has the termination.

3.4.7
GTR 8000 Base Radio Rear Connections (HPD)

The base radio connects with each of the site controllers and to the transmit and receive paths.

Figure 43: Base Radio – HPD Backplane

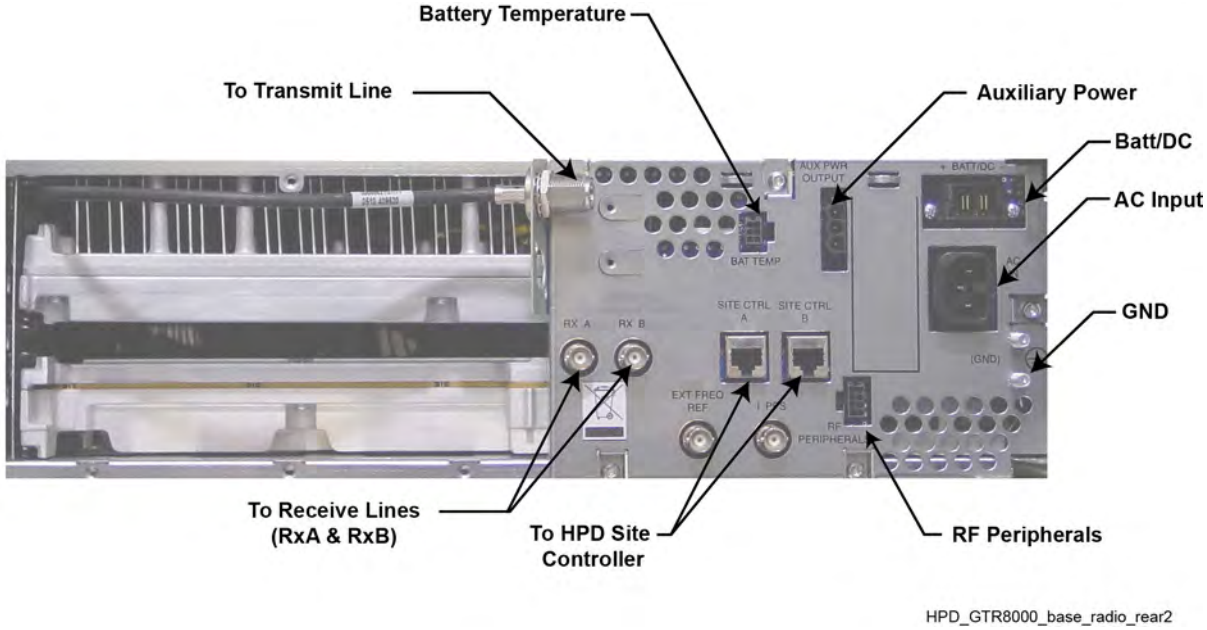

Table 37: Base Radio Backplane Connections for HPD

Port / Type	Device it connects to:	Port / Type	Description
SC A port, RJ-45	Site Controller module A	Base radio port, RJ-45	Connects to site controller A base radio port for this channel. **NOTICE:** The length of the cable between the site controller and the base radio should be no greater than 30 feet.
SC B port, RJ-45	Site Controller module B	Base radio port, RJ-45	Connects to site controller B base radio port for this channel.
RX-A, BNC	Receive line A	BNC	RF coax to receive path for Rx antenna.
RX-B, BNC	Receive line B	BNC	RF coax to receive path for antenna B.
Transmit port, N-type	Transmit line	N-type	RF coax to transmit antenna.
Aux Pwr Output	Site Controller or RMC/LNA	Aux Pwr Input	The auxiliary output power can be used to provide secondary power to the site controller or receive multicouplers (Site RMCs/LNAs).
Bat Temp, 6-pin	Battery temperature sensor		Connection to temperature sensor, allowing for temperature compensated battery charging.

Port / Type	Device it connects to:	Port / Type	Description
RF Peripherals			Not in use
Batt/DC	DC power supply or battery	Batt/DC	Input from and output to a 48 VDC power supply or backup battery. Input from and output to a 48 VDC power supply or backup battery. When AC power is not available, the device switches to operate from a DC source if the optional DC power (8AWG; length 9 ft), CA01400AA is ordered and installed. One end connects into the Batt/DC port and the other end connects into the DC source. The contacts are 39-83503N02 (AMP #53880-2), the receptacle housings are 15-83502N01 (AMP #53884-1) and the mounting ears are 07-83504N01 (AMP #53887-1). 3084869Y06 cable is used for a positive ground system. 3084869Y02 cable is used for a negative ground system.
AC	120/240 VAC power source.		Input from 120/240 VAC nominal power source.
EXT FREQ REF			Not in use
1 PPS			Not in use

3.4.8

GTR 8000 Base Radio Front Connections

Two service ports are accessible through a drop-down door to the left of the fans. The remaining ports are behind the fan module.

Figure 44: Base Radio – Front

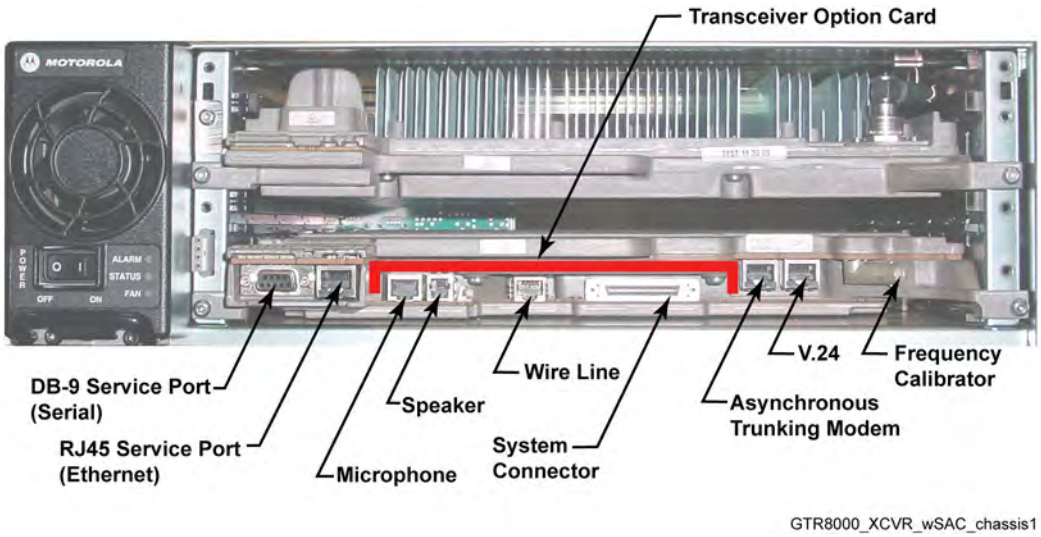

NOTICE: The optional Transceiver Option Card attaches to the control board. The board provides an internal 10 MHz frequency reference. For conventional operation, it provides the analog interfaces and WildCard I/Os.

Table 38: Transceiver Connections - Front

XCVR Port / Type	Connects to This Device/ Port	Description
Ethernet service port, RJ-45	Service PC, LAN port	Ethernet service port for local access using Configuration/Service Software (CSS). Also may be used for localized software downloads. **NOTICE:** Supports only 10 Mb half duplex operation.
Serial service port, DB-9	Service PC, RS-232 port	Serial service port for initial configuration of the IP address.
Microphone port, RJ-45	Microphone, RJ-45 port	Used to connect to a microphone with a PTT button. **NOTICE:** Use microphone kit GMMN4063B.
Speaker port, RJ-9	External Speaker, RJ-9 port	Used to connect to an amplified (DC powered) external speaker. Audio volume level is set from the CSS. **CAUTION:** To prevent damage to the base radio, use speaker kits HSN1006A and cable part no. 0185180U01.
Wireline port, RJ-45	Landline equipment, RJ-45	Connection between telephone lines or analog site equipment and the analog base radio. The wireline processes and routes all wireline audio signals between the base radio and landline equipment (such as consoles or modems).
System Connector, mini SCSI	50-pin Telco Connector or Punchblock	Provides the WildCard I/Os and supplementary Analog I/Os for analog simulcast and special applications. Editing of Wildcard configurations is permitted only through CSS.
Asynchronous port, RS232, RJ-45		Not in Use
V.24 port	Digital Circuit, RJ-45	Connection port when the base radio is part of a conventional or

XCVR Port / Type	Connects to This Device/ Port	Description
		trunked circuit-based site, mixed mode, or digital only.
Reference frequency input, BNC*	Service monitor	Connection port to service monitor for frequency calibration.

* See GTR 8000 Base Radio Time and Frequency Inputs on page 157.

NOTICE: For information about conventional functions and topologies the base radio supports, see the *Conventional Operations* manual. The base radio can be IP managed while using the 2- or 4-wire/V.24 interface for channel traffic.

3.4.8.1
System Connector Ports (Conventional)

The system connector, a 50-pin Mini SCSI connector, is used for the WildCard inputs, outputs, and the analog audio paths not routed to their own connector.

Table 39: 50–Pin System Connector Pin-Outs (Conventional)

Pin No.	Signal	Type	Function	Note
1	Aux In 2	Input	Main Standby - External handshaking	Pull To Ground To Activate
2	Aux In 4	Input	Main Standby- Status of other side	Pull To Ground To Activate
3*	Aux In 6	Input	In-Cabinet Repeat	Pull To Ground To Activate
4	Aux In 8	Input	Main Standby - Connectivity other Station	Pull To Ground To Activate
5	Aux In 9 –	Input	Phone Patch - PL Strip	Opto-Isolated In - Current flow to Activate
6	Aux In 10 –	Input	Phone Patch - Monitor	Opto-Isolated In - Current flow to Activate
7	Aux In 11 –	Input		Opto-Isolated In - Current flow to Activate
8	Aux In 12 –	Input		Opto-Isolated In - Current flow to Activate
9	Aux In 13	Input	For future use	Pull To Ground To Activate
10	Aux Out 12	Output		Low Impedance to Ground When Active
11	Aux Out 2	Output	Phone Patch - Rx Carrier	Low Impedance to Ground When Active
12	Aux Out 4	Output	Main Standby - Station Status	Low Impedance to Ground When Active
13	Aux Out 6	Output		Low Impedance to Ground When Active

Pin No.	Signal	Type	Function	Note
14	Aux Out Relay 7 Com	Output	RD STAT - Receiver Active	Form Relay A Closed When Active
15	Aux Out Relay 8 Com	Output	Main Standby - Antenna Relay	Form Relay A Closed When Active
16	Aux Out Relay 9 Com	Output		Form Relay A Closed When Active
17	Aux Out Relay 10 Com	Output		Form Relay A Closed When Active
18	Aux Out 11	Output		Low Impedance to Ground When Active
19	External_Reset	Input	Reset	Buffered Input Pull To Ground To Activate
20	TSTAT	Output	For future use	0 Volts When Inactive / +5 Volts when Active
21	AUX RX	Output	Aux Rx	Analog Signal – Unbalanced
22	GND		GND	
23**	AUX TX	Input/ Output	Aux Tx	Analog Signal – 600 Ohm Unbalanced
24	PL -	Input	PL(-) In	Analog Signal – 600 Ohm Balanced
25**	Gen TX –	Input	Gen TX Data-	Analog Signal – 600 Ohm Balanced
26	Aux In 1	Input	Phone Patch - Call Request	Pull To Ground To Activate
27	Aux In 3	Input	Tx Inhibit	Pull To Ground To Activate
28	Aux In 5	Input	External PTT	Pull To Ground To Activate
29	Aux In 7	Input	Rx Inhibit	Pull To Ground To Activate
30	Aux In 9 +	Input	Phone Patch - PL Strip	Opto-Isolated In - Current flow to Activate
31	Aux In 10 +	Input	Phone Patch - Monitor	Opto-Isolated In - Current flow to Activate
32	Aux In 11 +	Input		Opto-Isolated In - Current flow to Activate
33	Aux In 12 +	Input		Opto-Isolated In - Current flow to Activate
34	GND		GND	
35	Aux In 14	Input	For future use	Pull To Ground To Activate
36	Aux Out 1	Output	Phone Patch - Inhibit / Enable	Low Impedance to Ground When Active
37	Aux Out 3	Output		Low Impedance to Ground When Active
38	Aux Out 5	Output		Low Impedance to Ground When Active
39	Aux Out Relay 7 N.O.	Output	RD STAT - Receiver Active	Form Relay A Closed When Active

Pin No.	Signal	Type	Function	Note
40	Aux Out Relay 8 N.O.	Output	Main Standby - Antenna Relay	Form Relay A Closed When Active
41	Aux Out Relay 9 N.O.	Output		Form Relay A Closed When Active
42	Aux Out Relay 10 N.O.	Output		Form Relay A Closed When Active
43	GND		GND	
44	GND		GND	
45	RSTAT	Output	For future use	0 Volts When Inactive / +5 Volts when Active
46	GND		GND	
47	TX DATA +			
48	GND		GND	
49	PL +	Input	PL(+) In	Analog Signal – 600 Ohm Balanced
50**	Gen TX +	Input	Gen TX DATA +	Analog Signal – 600 Ohm Balanced

* For detailed information on the differences between the automatic **Fallback In-Cabinet Repeat** and the externally-wired **In-Cabinet Repeat** functions, see the *Conventional Operations* manual.

** It is the responsibility of the third-party vendor to ensure that the signal generated by their device is compliant with any regulatory agency limitation imposed on the channel. This signal is not filtered or limited by the GTR 8000 Base Radio.

Figure 45: 50–Pin System Connector Pin-Outs (Conventional)

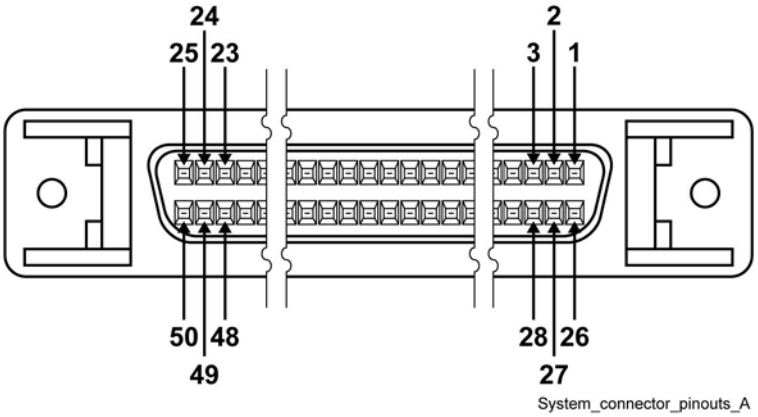

3.4.8.2
System Connector Ports (Trunked 3600)

The system connector is a 50-pin Mini SCSI connector. It is used for the WildCard inputs, outputs, and the analog audio paths not routed to their own connector.

Table 40: 50–Pin System Connector Pin-Outs (Trunked 3600)

Pin #	Signal	Type	Function	Note
1	Aux In 2	Input	CCI	Pull To Ground To Activate
2	Aux In 4	Input	TPTT	Pull To Ground To Activate
3*	Aux In 6	Input	In-Cabinet Repeat	Pull To Ground To Activate
4	Aux In 8	Input		Pull To Ground To Activate
5	Aux In 9 –	Input		Opto-Isolated In - Current flow to Activate
6	Aux In 10 –	Input		Opto-Isolated In - Current flow to Activate
7	Aux In 11 –	Input		Opto-Isolated In - Current flow to Activate
8	Aux In 12 –	Input		Opto-Isolated In - Current flow to Activate
9	Aux In 13	Input	Trunking Mute	Pull To Ground To Activate
10	Aux Out 12	Output		Low Impedance to Ground When Active
11	Aux Out 2	Output		Low Impedance to Ground When Active
12	Aux Out 4	Output		Low Impedance to Ground When Active
13	Aux Out 6	Output		Low Impedance to Ground When Active
14	Aux Out Relay 7 Com	Output	RD STAT - Receiver Active	Form Relay A Closed When Active
15	Aux Out Relay 8 Com	Output		Form Relay A Closed When Active
16	Aux Out Relay 9 Com	Output		Form Relay A Closed When Active
17	Aux Out Relay 10 Com	Output		Form Relay A Closed When Active
18	Aux Out 11	Output		Low Impedance to Ground When Active
19	External_Reset	Input	Reset	Buffered Input Pull To Ground To Activate
20	TSTAT	Output	TSTAT	0 Volts When Inactive / +5 Volts when Active

Pin #	Signal	Type	Function	Note
21	AUX RX	Output	Aux Rx	Analog Signal – Unbalanced
22	GND		GND	
23**	AUX TX	Input/ Output	Aux Tx	Analog Signal – 600 Ohm Unbal-anced
24	PL -	Input	n/a	Analog Signal – 600 Ohm Balanced
25**	Gen TX –	Input	Gen TX Data-	Analog Signal – 600 Ohm Balanced
26	Aux In 1	Input	Ext Failsoft	Pull To Ground To Activate
27	Aux In 3	Input	Tx Inhibit	Pull To Ground To Activate
28	Aux In 5	Input	External PTT	Pull To Ground To Activate
29	Aux In 7	Input	Rx Inhibit	Pull To Ground To Activate
30	Aux In 9 +	Input		Opto-Isolated In - Current flow to Activate
31	Aux In 10 +	Input		Opto-Isolated In - Current flow to Activate
32	Aux In 11 +	Input		Opto-Isolated In - Current flow to Activate
33	Aux In 12 +	Input		Opto-Isolated In - Current flow to Activate
34	GND		GND	
35	Aux In 14	Input	For future use	Pull To Ground To Activate
36	Aux Out 1	Output	Failsoft Indicate	Low Impedance to Ground When Active
37	Aux Out 3	Output		Low Impedance to Ground When Active
38	Aux Out 5	Output		Low Impedance to Ground When Active
39	Aux Out Relay 7 N.O.	Output	RD STAT - Receiver Active	Form Relay A Closed When Active
40	Aux Out Relay 8 N.O.	Output		Form Relay A Closed When Active
41	Aux Out Relay 9 N.O.	Output		Form Relay A Closed When Active
42	Aux Out Relay 10 N.O.	Output		Form Relay A Closed When Active
43	GND		GND	
44	GND		GND	
45	RSTAT	Output	RSTAT	0 Volts When Inactive / +5 Volts when Active
46	GND		GND	
47	TX DATA +			
48	GND		GND	

Pin #	Signal	Type	Function	Note
49	PL +	Input	n/a	Analog Signal – 600 Ohm Balanced
50**	Gen TX +	Input	Gen TX DATA +	Analog Signal – 600 Ohm Balanced

* For detailed information on the differences between the automatic **Fallback In-Cabinet Repeat** and the externally-wired **In-Cabinet Repeat** functions, see the *Conventional Operations* manual.

** It is the responsibility of the third-party vendor to ensure that the signal generated by their device is compliant with any regulatory agency limitation imposed on the channel. This signal is not filtered or limited by the GTR 8000 Base Radio.

Figure 46: 50–Pin System Connector Pin-Outs (Trunked 3600)

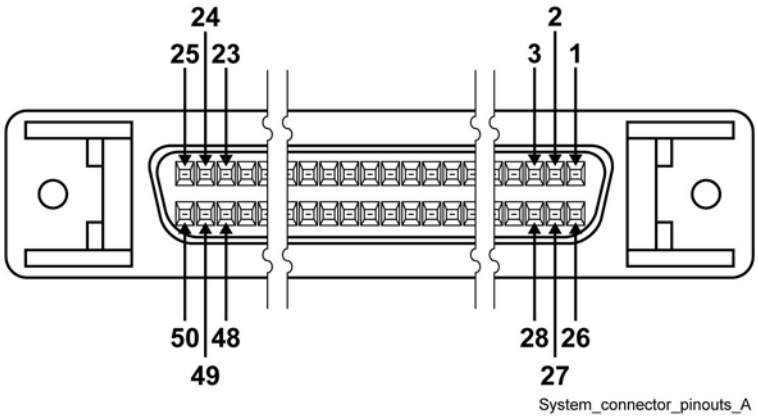

3.4.8.3
Wireline Port Pin-Outs

The Wireline port, an RJ-45 connector, can accommodate up to eight pins.

Table 41: Wireline Port Pin-Outs

Signal Name	Pin No.	2-Wire Connection	4-Wire Connection	Auxiliary 4-Wire Connection
Line2_+	1	Input/Output	Output	
Line2_–	2	Input/Output	Output	
Line3_+	3			Input
Line1_–	4		Input	
Line1_+	5		Input	
Line3_–	6			Input
Line4_+	7			Output
Line4_–	8			Output

Figure 47: Wireline Port Pin-Outs

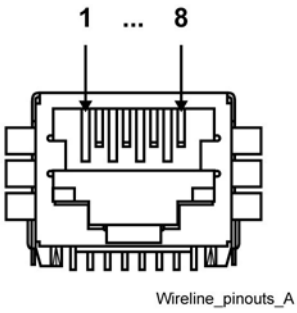

3.4.8.4
Microphone Port Pin-Outs

The Microphone port is an RJ-45 connector that provides the interface for a microphone.

Table 42: Microphone Port Pin-Outs

Signal Name	Pin No.
Reserved	1
Reserved	2
MIC_PTT	3
MIC_AUDIO	4
GND	5
Reserved	6
Reserved	7
Reserved	8

Figure 48: Microphone Port Pin-Outs

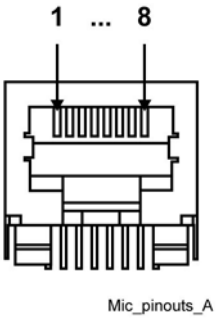

3.4.8.5
Speaker Port Pin-Outs

The Speaker port is an RJ-9 connector that provides the interface to an external speaker.

CAUTION: To prevent damage to the base radio, use the HSN1006A speaker with the 0185180U01 cable.

Table 43: Speaker Port Pin-Outs

Signal Name	Pin No.
GND	1
+12 V	2
GND	3
Speaker Out	4

Figure 49: Speaker Port Pin-Outs

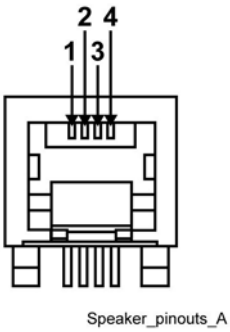

3.4.8.6
V.24 Port Pin-Outs

The V.24 port is an RJ-45 connector that provides the interface to a Digital Interface Unit, Conventional Channel Interface, Conventional Channel Gateway (CCGW), ASTRO-TAC® 3000 Comparator, Link Converter, or Channel Bank.

Table 44: V.24 Port Pin-Outs

Signal Name	Pin No.	Type
RCLK	1	Input
Rx Line Det	2	Input
TCLK	3	Input/Output
GND	4	GND
Data Rx	5	Input
Data Tx	6	Output
CTS	7	Input
RTS	8	Output

3.4.8.7
GTR 8000 Base Radio Part 68 Information

This section applies when the base radio is equipped with the optional wireline interface circuitry contained on the Oven Controlled Crystal Oscillator (OCXO) Transceiver Option Card (Option

CA01506AA) or Temperature Compensated Crystal Oscillator (TCXO) Transceiver Option Card (Option CA01953).

NOTICE: The TCXO Transceiver Option Card is used for the Power Efficiency Package option.

This equipment complies with Part 68 of the FCC rules and the requirements of the Administrative Counsel for Terminal Attachments (ACTA). On the rear of this equipment is a label that contains, among other information, the registration number:

- US: ABZNINANT7039

If requested, this number must be provided to the telephone company.

The connector used to connect this equipment to the premises wiring and telephone network must comply with the applicable FCC Part 68 rules and requirements of the ACTA. A compliant connector is provided with this product. See installation instructions for details.

REN: N/A
Connector: RJ-48
Authorized Network Port: 04NO2
Service Order Code: 7.0Y

If the equipment causes harm to the telephone network, the telephone company notifies your organization in advance that temporary discontinuance of service may be required. If advance notice is not practical, the telephone company notifies your organization as soon as possible. Also, your organization is advised of the right to file a complaint with the FCC if it is necessary.

The telephone company may change its facilities, equipment, operations, or procedures that could affect the operation of the equipment. If changes happen, the telephone company provides advance notice so your organization can make necessary modifications to maintain uninterrupted service.

If your organization experiences trouble with this equipment, see Motorola Solutions Support Center on page 219 for repair and warranty information. If the equipment is causing harm to the telephone network, the telephone company may request that you disconnect the equipment until the problem is resolved.

None of the circuit boards in this equipment are field repairable. For assistance in sending the boards back for repair, see Motorola Solutions Support Center on page 219.

This equipment cannot be used on telephone company public coin phone service. Connection to party line service is subject to state tariffs. Contact the state public utility commission, public service commission, or corporation commission for information.

3.5 Installation/Troubleshooting Tools

In addition to the general tools needed for site installation activities, a service monitor is used specifically for testing the equipment.

To place an order, contact Motorola Solutions at:
Phone: 1-800-422-4210 ext. 6883
TTY Phone: 1-866-522-5210
Motorola Online users: Web: https://businessonline.motorolasolutions.com
Fax: 1-800-622-6210

3.5.1
Quick Connect RF Coaxial Adapters for GTR 8000 Base Radio Support

The GTR 8000 Base Radio employs a number of "QN" and "QMA" Quick-Connect RF connectors in its design. The following RF adapters are available from Motorola Solutions and can be used to connect test equipment to the various station devices for troubleshooting purposes.

Table 45: Quick-Connect RF Coaxial Adapters for GTR 8000 Base Radio Support

Type	Adapter / Connector description	Motorola Solutions Part Number
"N"/QN	Female "N" to Male QN	5886055Y01
"N"/QN	Female "N" to Female QN	5886055Y10
"N"/QN	Male "N" to Male "QN"	5886055Y05
QN	Right Angle Male QN cable plug for RG-400 coax	2871002H01
QN	Right Angle Male QN cable plug for RG-213 coax	2886067Y01
N/QMA	Female "N" to Male QMA	5886055Y06
N/QMA	Female "N" to Female QMA	5886055Y07
QMA/QMA	Female QMA to Female QMA	5886055Y08
QMA/QMA	Male QMA to Male QMA	5886055Y09
7/16/QN	Female 7/16 to male QN	5886055Y03
7/16/QN	Male 7/16 to Male QN	5886055Y02
7/16/QN	"Female 7/16 to female QN Intermod test adaptor"	5886055Y04
7/16/QN	"Male 7/16 to female QN Intermod test adaptor"	5886055Y11

3.6
Installing Device Software Prerequisites

When and where to use: The following tasks are required before you can complete the device software installation and begin the configuration procedures in the “Configuration” chapter.

Process:

1. Transfer and install new software to a device using the Software Download Manager. See Software Download Manager on page 123.
2. Obtain the ASTRO® 25 media. Specifically, you need the Motorola Solutions Device OS Image media. See Loading Device OS Images to the UNC on page 126.
3. Obtain user names, passwords, and procedures required to access the devices on the network. For specific user names and passwords to access devices on the network, contact your system administrator.
4. Set up the users in the IT Admin group in Active Directory Users and Computers. See the *Authentication Services* manual.

5 Obtain the following values from the system administrator:
   - Line interface number
   - Zone Controller (ZC) site link path 1 IP address
   - ZC site link path 2 IP address
   - Host name to access the Unified Network Configurator (UNC) server application using Secure SHell (SSH) (***<username>*** @IP address format)
   - Site ID number
   - IP address 1 and 2
   - Primary and secondary NTP IP addresses

     NOTICE: The following are applicable to systems with Authentication, Authorization, and Accounting (AAA) Servers, Domain Controllers, or Syslog Servers.
   - Primary, secondary, and tertiary Domain Name Services (DNS) IP addresses
   - Requested DNS Domain Name
   - Requested DNS Host Name
   - System Name
   - Primary SYSLOG Service Name Fully Qualified Domain Name (FQDN)
   - Backup SYSLOG Service Name Fully Qualified Domain Name (FQDN)
   - Remote Authentication Dial-In User Service (RADIUS) FQDN parameter value
   - RADIUS Row Status parameter value
   - RADIUS Service Time Out (seconds) parameter value
   - RADIUS Service Retransmits Attempts parameter value
   - RADIUS Service Dead Timer (min) parameter value
   - RADIUS Specific Key parameter value
   - RADIUS Service Global Key parameter value

6 Obtain the default credentials (local accounts, central authentication, and SNMPv3) for the device being installed, as well as the updated passwords for those types of accounts (so that you can change the password after you install the device). Contact your system administrator, if you do not have this information. See the *SNMPv3* manual or see Local Password and SNMPv3 Passphrase Troubleshooting on page 218 for more information.

7 Configure the device as a RADIUS client on the RADIUS server. When these devices are configured with a RADIUS key that matches a shared secret for that device in Microsoft Windows Internet Authentication Service (IAS), they become RADIUS clients. They do not join the Active Directory domain. See the *Authentication Services* manual for more information.

8 **NOTICE:** This step is applicable to systems with AAA Servers, Domain Controllers, or Syslog Servers.

   To use the VoyenceControl component of the Motorola Solutions centralized configuration application for any of the site device procedures, set up the UNC. Depending on your organizational policies, you may also need to implement a secure protocol between the UNC and the site device. Before performing any procedures using VoyenceControl, the device must be discovered in VoyenceControl, and the device configurations must be recently pulled to the UNC database. See the following ASTRO® 25 system documentation: *Unified Network Configurator* manual and *Securing Protocols with SSH* manual.

3.7

Software Download Manager

The Software Download Manager (SWDL) is an application that can transfer only, install only, or transfer and install new software to devices. The new software can be installed either locally at a site or on the Network Management subsystem. Individual devices not connected to the system can be downloaded using single device mode.

NOTICE: Throughout this manual, the name SWDL is used to refer to the Software Download Manager application.

Software Download Security Transfer Modes

A software download can be performed using the following security transfer modes:

Clear SWDL
Transfers the software without security, based on the File-Transfer Protocol (FTP)

Secure SWDL
Transfers the software as encrypted, based on the Secure File-Transfer Protocol (SFTP)

NOTICE: All secure sequential and simultaneous transfers use the Diffie-Hellman group exchange. The Diffie-Hellman group exchange is used for devices supporting Diffie-Hellman group exchange. The Diffie-Hellman group exchange enhances the security of Secure Shell (SSH) protocol initial key exchange. See the *Software Download Manager* manual for details.

Before initiating transfer, SWDL connects to the site in the zone to discover all devices. The transfer mode of all devices is displayed in the SWDL window. It is important that all devices have the same SWDL transfer mode. Otherwise, SWDL flags a mismatch of the SWDL transfer modes across site devices.

SWDL provisions the credentials for Secure SWDL as part of initiating the SWDL operation. No user intervention is required. For a single device, Secure or Clear SWDL is configured based on the SWDL Transfer Mode configuration within the Configuration/Service Software (CSS). The Unified Network Configurator (UNC) can be used to schedule and configure all devices in the system at once.

For information on how to configure the secure or clear SWDL transfer mode, see the *Unified Network Configurator* manual and “Configuring Devices for Security” in the *CSS Online Help*.

Software Download Transfer Methods

A software download can be accomplished in two ways:

Site Software Download
Allows you to transfer and install application software from any location within a network. The Software Download Manager resides on the Network Management Client computer and a service computer/laptop loaded with the CSS application. From either of the computers, you can select device types to download software. Site Software Download allows you to select the zone, site, device types, and software download operation to perform. When performing a site software download, the site controller coordinates the software transfer for all trunked base radios, receivers, comparators, and reference distribution modules installed at the site. A site software download can only be performed on a trunked ASTRO® 25 system.

NOTICE: Trunked GPW 8000 Receivers in a circuit simulcast configuration are not supported using a site software download.

Single Device Software Download
Allows you to transfer and install software to a single instance of a device (such as one base radio). This feature gives the technician the ability to install different versions of software. Single device software download is done from a service computer/laptop loaded with the CSS application either connected directly to the device or connected to the network.

NOTICE: Conventional devices and 3600 base radios are supported only in single device software download.

Site Software Download Functionality

When SWDL is connected from a central remote location, SWDL performs a site software download to the site controllers, then to the comparators and base radios or receivers installed at the site. Both active and standby site controller modules have two flash memory banks for storing software. The device application is run from RAM, and is loaded from the active flash memory bank after a reset. One bank is active while the other bank is inactive. The transfer of the software using SWDL is a background process, without interruption of services at the site, that loads the software into the inactive bank. The site controller executes the software from one bank, while software is simultaneously downloaded to the inactive bank. The transfer and install are done in the background. An install causes the site controller to reset and load the RAM from the bank that was installed with the new software.

NOTICE: For geographically redundant prime sites, a site software download should not be attempted while the third Site Controller (SC3) is in the active state.

SWDL communicates with the site controllers to determine the number of existing remote sites and the number of channels. SWDL considers a channel or remote site to be accessible if its status is “Not Unconfigured.” This term means that the site must be set up with a service computer/laptop with CSS or a network management client before software download is performed on the site.

The system downloads software to the site controllers, comparators, base radios, or receivers as a unit. Use SWDL to transfer software to each device type, then perform an install operation. During the transfer, the operation designates a proxy for each device type at each LAN. Site controllers proxy for comparators, and base radios or receivers proxy for each other. The proxy cross-transfers the software to other devices on the LAN. Using proxies minimizes system downtime. Transfers to the LAN are done simultaneously except for the site controller and comparators.

Software installation is done on a channel-by-channel basis, starting with the highest number channel. When a channel software download occurs, the base radio or receiver which incorporates that channel is processed along with the comparator for that channel. For example, if channel 3 was being downloaded, comparator 3 and the base radios or receivers for channel 3 at each of the remote sites would be installed simultaneously.

SWDL operation can be fault managed through Unified Event Manager (UEM), syslog, local SWDL log files, user messages, and device reports.

For further information on SWDL, see the *Software Download Manager* manual.

The operating software can also be loaded using the UNC. See the *Unified Network Configurator* manual to perform single device software downloads (ruthless download) to the devices.

See the *G-Series Equipment System Release User Guide* for SWDL instructions specific to the operating characteristics of your existing system release.

3.8 Installing Devices in the UNC

When and where to use: The Unified Network Configurator (UNC) is the Network Manager used to discover a device and load Operating System images. This process lists the basic steps involved using the UNC on a device.

NOTICE: The UNC is not applicable for K core or non-networked sites.

Process:

1. Discover the device in the UNC. See Discovering a Device in the UNC on page 125.

2 Log in to the UNC server application using PuTTY. See the *Securing Protocols with SSH* manual.
3 Load the operating system images to the UNC. See Loading Device OS Images to the UNC on page 126.
4 Enable FTP services on the UNC. See Enabling FTP Service on page 127.
5 Transfer and install the OS image to the device. See Transferring and Installing the OS Image on page 127.
6 Inspect the device properties for the transferred and installed software. See Inspecting Device Properties for Transferred and Installed Software on page 130.
7 Disable FTP services for the UNC. See Disabling FTP Service on page 131.

3.8.1
Discovering a Device in the UNC

When and where to use:
The discovery process allows the Unified Network Configurator (UNC) to manage the site devices. Once the device is installed, configured through the Configuration/Service Software (CSS), and security parameters are enabled, follow this procedure to discover the device. The configuration information can then be updated using this configuration management application.

The UNC network management solution consists of two applications. Both the UNC Wizard and the VoyenceControl applications are used in this procedure.

NOTICE: The names EMC Smarts™ Network Configuration Manager and VoyenceControl are used interchangeably for this product.

Once the device is discovered in the UNC, the OS images and CSS configuration files can be loaded to add a device to a site, which then connects the site to the current ASTRO® 25 zone core.

Procedure:

1 Ensure that Domain Name Services (DNS) is functional on your system. DNS is supplied by a specific server application, which must be operational before you can discover the device.
2 Log on to the UNC Wizard from the Network Management (NM) client, by double-clicking the **Internet Explorer** icon on the desktop.

   The Internet Explorer browser opens.

3 In the **Address** field, enter: `http://ucs-unc0<Y>.ucs:9443/UNCW`

   where <Y> is the number of the UNC server (01 for primary core UNC server, and 02 for backup core UNC server).

   The UNC Wizard launches and a login dialog box appears.

4 Type the administrative user name and password. Click **OK**.

   The UNC Wizard appears.

5 From the list of available wizards on the left side, select **Subnet Discovery**.

   The right side of the window is updated with the **Subnet Discovery** form.

6 Select **RF Site** by clicking the **Discovery Type** drop-down list.
7 Enter the **Zone ID** and the **Site ID**. Click **Submit**.

   An auto-discovery job is created in the UNC Schedule Manager.

8 Log on to the UNC from the NM client by entering:

```
http://ucs-unc0<Y>.ucs
```

where <Y> is the number of the UNC server (01 for primary core UNC server, and 02 for backup core UNC server).

The UNC client launches and a login dialog box appears.

9 Type the administrative user name and password. Click **OK**.

VoyenceControl launches.

NOTICE: The names EMC Smarts™ Network Configuration Manager and VoyenceControl are used interchangeably for this product.

10 Press F7 (Schedule Manager).

The **Schedule Manager** window appears in the UNC with the discovery jobs.

11 Verify that the **Zone** and **Site** containers include any devices discovered.

IMPORTANT: No site devices should be in the **Lost and Found** folder. If any devices are in the folder, see the *Unified Network Configurator* manual for troubleshooting guidance.

12 In the UNC Wizard, verify the devices by selecting **Channel** under **RF Site Level Configuration**. If multiple zones exist, choose **Zone**.

The device sites are listed, which means they are available for channel configuration.

3.8.2
Loading Device OS Images to the UNC

Prerequisites: This procedure requires the Motorola Solutions device Operating System (OS) Image media. Locate the Transport OS Image media packaged with the Network Management media.

When and where to use: This procedure loads the OS images for the devices for distribution through the Unified Network Configurator (UNC). Once OS images are distributed to the UNC, you can update the device Configuration/Service Software (CSS) configuration files to the UNC.

Procedure:

1 Launch a Secure SHell (SSH) terminal server session in PuTTY to access the UNC **Server Administration** menu. See the *Securing Protocols with SSH* manual.

2 From the UNC **Server Administration** menu, select **OS Images Administration**. Press ENTER.

3 From the OS **Images Administration** menu, select **Load new OS images**. Press ENTER.

A message appears indicating there are two methods for loading OS Images.

4 Insert the **Motorola Solutions Device OS Images** media into the CD/DVD-ROM drive of the server.

The drive light starts blinking on the server.

5 When the drive light stops blinking, press ENTER.

The OS images load on the UNC.

6 From the menu, select **View OS Images**. Press ENTER.

The device software image appears.

7 From the menu, select **Eject CD**. Press ENTER.

The media ejects from the drive on the server.

8 Remove the **Motorola Solutions Device OS Images** media from the CD/DVD-ROM drive of the server.

9 To log out of the server, press ENTER.

The **User Configuration Server Administration** menu appears.

10 Press ENTER again.

The prompt appears.

3.8.3
Loading Software to a Device

NOTICE: These procedures are for a single device download. For a site download, see Software Download Manager on page 123.

The following procedures describe how to load software images onto Unified Network Configurator (UNC) and download and install this software to the device. Secure protocols for software download is the preferred approach to transfer operations. However, as a backup option, FTP service can be enabled before installing the software.

3.8.3.1
Enabling FTP Service

When and where to use: Follow this procedure to enable FTP service before installing the OS software.

Procedure:

1 Launch a Secure Shell (SSH) terminal server session in PuTTY to access the Unified Network Configurator (UNC) **Server Administration** menu. See the *Securing Protocols with SSH* manual.

2 From the Server Administration menu, select **Unix Administration**. Press ENTER.

3 From the Unix Administration menu, select **FTP Services**. Press ENTER.

4 From the FTP Services menu, select **Enable FTP service**. Press ENTER.

The FTP Services are enabled and available for software transfer and install operations.

3.8.3.2
Transferring and Installing the OS Image

When and where to use: Use this procedure to download the OS from the Unified Network Configurator (UNC) to the device.

Procedure:

1 On the Private Network Management (PNM) client where you set up VoyenceControl, double-click the UNC shortcut on the desktop.

You can also paste the following address into an IE web browser: `http://ucs-unc0<Y>.ucs`, where <Y> is the number of the UNC server (01 for primary core UNC server, and 02 for backup core UNC server).

Internet Explorer opens to the URL of the application server, and a VoyenceControl client session launches with the welcome page.

Figure 50: VoyenceControl Welcome Page

NOTICE: The names EMC Smarts™ Network Configuration Manager and VoyenceControl are used interchangeably for this product.

2 Click the **launch VoyenceControl™** link.

A VoyenceControl client session launches with the login window.

Figure 51: VoyenceControl Login Window

3 Enter the User ID and Password. Click **OK**.

The **VoyenceControl Dashboard** appears.

Figure 52: VoyenceControl Dashboard

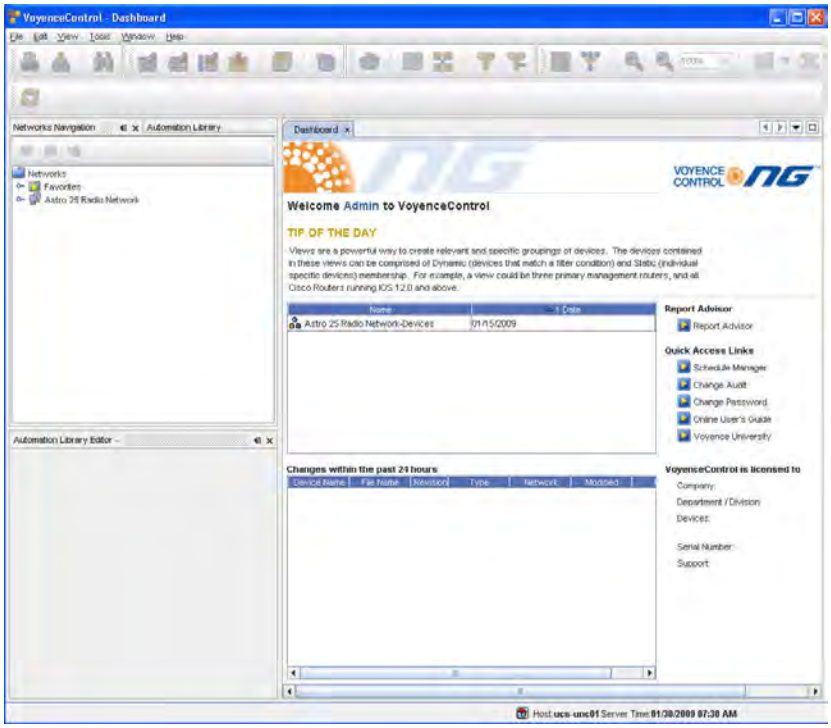

4 In the left navigation pane, expand **Networks**, then select **ASTRO 25 Radio Network**, then **Views**.

The list of options expands.

5 From the navigation pane, double-click **Motorola <device>**.

The view opens and all currently discovered devices appear.

6 From the menu, select **Tools** → **OS Inventory**.

A list of the OS images appears.

7 Verify OS images loaded on the UNC server appear in the OS inventory.

NOTICE: These images were automatically created during the Loading Device OS Images to the UNC on page 126 procedure.

8 Under **Networks** in the navigation pane, select one or more devices from the same device class by right-clicking the selections.

9 From the menu, select **Update OS Image**.

10 From the **Select OS Image** window, select **Software Image**. Click **Next**.

11 From the **Update OS Image** window, select each device that appears in the **Selected Devices** section.

This action associates a version to a device instance.

NOTICE: In most cases, the “summary of device partitions” is already set up and the values in step 11 through step 14 must be verified.

12 Select **nvm partition** from the **Manage Partition for Device** section.

NOTICE: Selecting **nvm partition** defines where the OS image is transferred and is the only choice for the device.

13 From the **Selected Image** section, select the image for this device.

NOTICE: Ignore the **Install** and **Copy** check boxes.

The **Image Info** tab is populated and informs the application which image to use.

14 Click **Add**.

The **Summary of Device Partitions for Device** populates and confirms the proper setup.

15 Select the **Device Options** section, **Software Operations**, then choose **transfer**, **install**, or **both**.

These selections indicate which operations occur when the job is executed.

NOTICE: If **transfer** is chosen, select the install option later to complete the installation. If **both** is chosen, the software is transferred and installed. There are up to two resets of the device during installation.

16 Click **Schedule**.

17 From the **Schedule Push Job** window, configure the schedule information. Click **Approve and Submit**.

The job is approved and can be viewed in the **Schedule Manager** window.

NOTICE: If only **Submit** is chosen, the job must be approved later.

18 Verify the job status by pressing F7 (Schedule Manager).

The **Schedule Manager** window appears in the UNC with the discovery jobs.

3.8.3.3
Inspecting Device Properties for Transferred and Installed Software

When and where to use: When the software has been transferred and installed, follow this procedure to inspect the device properties before assuming the installation was a success and disabling FTP service

Procedure:

1 From the **Device** view, right-click the device, select **Pull**, and then **Pull Hardware Spec**.

The current software version information is updated in the Unified Network Configurator (UNC).

NOTICE: Skip this step if a Pull All or Pull Hardware Spec has already occurred.

2 From the **Device** view, right-click on the device, and then choose **Properties**.

The **Device Properties** window appears.

NOTICE: Select the **Properties** icon to view the device properties appear directly within the **Device** view.

3 Choose the **Configuration** tab, and then the **Hardware** tab.

4 Double-click the **Chassis** object from the **Physical Hardware** properties.

5 From the **Chassis** property tree, view the following properties and their values:
   - **Bnk1:*<device>***: Transferred software in bank 1.
   - **Bnk2:*<device>***: Transferred software in bank 2.
   - ***<device>***: Installed and Running Software.

   NOTICE: The Table format can be used (instead of the Diagram format) to view the Installed and Running Software in the **Device** view.

3.8.3.4
Disabling FTP Service

When and where to use: Follow this procedure to disable the FTP service after the transfer and installation of the software is completed.

Procedure:

1 Launch a Secure SHell (SSH) terminal server session in PuTTY to access the Unified Network Configurator (UNC) **UNC Server Administration** menu. See the *Securing Protocols with SSH* manual.

2 From the **UNC Server Administration** menu, select **Unix Administration**. Press ENTER.

3 From the Unix Administration menu, select **FTP Services**. Press ENTER.

4 From the **FTP Services** menu, select **Disable FTP service**. Press ENTER.

   The FTP services are disabled and unavailable for software transfer and install operations.

5 To back out of the menus, press Q three times.

6 At the prompt, enter: `exit` to return to the previous menu.

7 To log out of the application, enter: `exit`.

8 Close the PuTTY connection.

Chapter 4

GTR 8000 Base Radio Configuration

Proper software/hardware configuration for the GTR 8000 Base Radios and subsystems require the following activities:

- Updating factory-installed base radio application software
- Setting parameters in a configuration file stored on the GTR 8000 Base Radio that impacts both base radio and RF Distribution System (RFDS) functionality.

This chapter details configuration procedures relating to the base radio.

4.1 Configuration Software

Configuration of a device can be done on two software applications: Configuration/Service Software (CSS) and Unified Network Configurator (UNC).

CSS
is used to configure the parameters on the device. CSS can access devices remotely over the network, or locally through an Ethernet/serial connection to the service port on the device or through a LAN switch. CSS also can be used to view status information, equalize batteries, and check internal logs of the equipment at the site. See the *CSS Online Help* for configuration details.

UNC Wizard
is a component of UNC used to configure the parameters of a site, subsite, and channel. See the *UNC Wizard Online Help* for configuration details.

VoyenceControl
is a component of UNC used to pull and push configurations and configure the parameters of the device. See the *Unified Network Configurator* manual for general information about using VoyenceControl functions.

NOTICE: While it is possible to configure a conventional device using the UNC, it is preferable to use CSS because configuration dependencies are enforced.
The UNC is not applicable for K core or non-networked sites.

All parameters are programmed locally when the site is installed but not linked to a network. Test all parameters before making the site available. The ability to locally program provides the means to test the site before making it available for system operation.

4.2 Discovering a Device in the UNC

When and where to use: Use these high-level steps to discover the devices in the Unified Network Configurator (UNC). See the *Unified Network Configurator* manual for details on discovering devices.

Process:

1. Use the UNC Discovery Wizard to:
   - Discover the devices.
   - Upload configurations for the devices.
   - Generate changes for non-compliant devices.

2 Approve jobs (if any).

4.3 Security/Authentication Services

If the device supports SNMPv3 protocol, a pop-up dialog box appears displaying the SNMPv3 Password Prompt when logging in to a device through Configuration/Service Software (CSS) using an Ethernet connection. For configuration details, see the *Information Assurance Features Overview*, *Software Download Manager*, and *SNMPv3* manuals. See Figure 53: SNMPv3 Security Level Option Prompt on page 133.

Figure 53: SNMPv3 Security Level Option Prompt

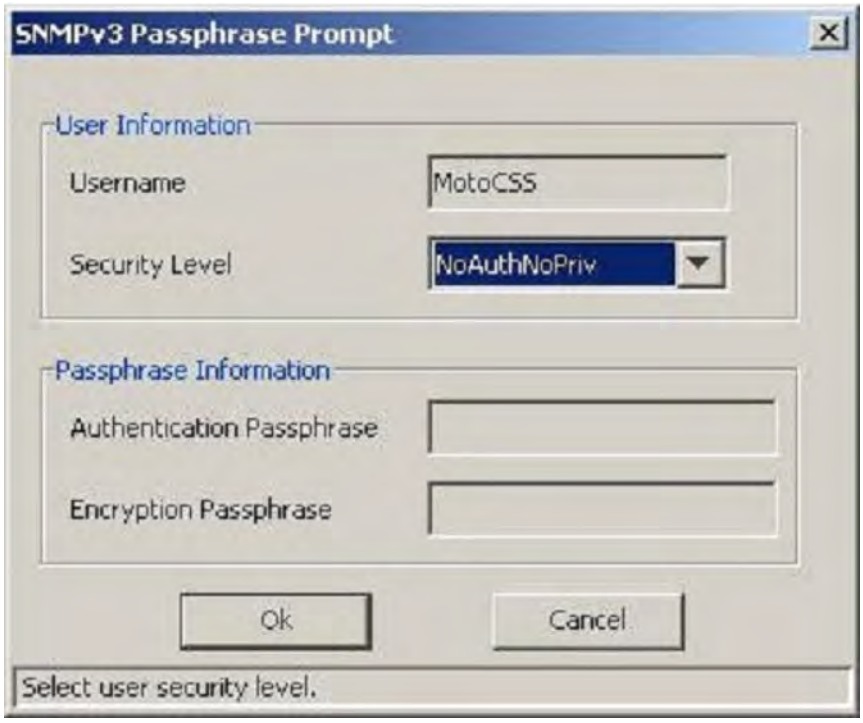

A pop-up window appears displaying the File Transfer Access Services for CSS. Use this logon when communicating to a device through CSS using either an Ethernet or DB-9 Serial Port connection. See Figure 54: CSS Login Banner on page 134.

Figure 54: CSS Login Banner

4.4

Device Configuration in CSS

This section covers configuration of a device using the Configuration/Service Software (CSS).

NOTICE: The IP address for the device is available through a serial port connection in the **Tools** → **Set IP Address** from the CSS menu.

4.4.1

CSS Initial Device Configuration

Process:

1. Perform the following configuration steps that require a serial connection. See Connecting Through a Serial Port Link on page 135.
   - **a** Set the IP address and paring number of the device. See Setting the Device IP Address and Pairing Number in CSS on page 137.
   - **b** Set the serial security services. See Setting the Serial Security Services in CSS on page 138.
2. Perform the following configuration steps that require an Ethernet connection. See Connecting Through an Ethernet Port Link on page 140.
   - **a** Set the pairing number of the device. See Setting the BR/CM Pairing Number in CSS on page 142.
   - **b** Set the current date and time. See Setting the Date and Time in CSS on page 143.
   - **c** Change the SNMPv3 configuration and user credentials on a selected device in the site. See Changing SNMPv3 Configuration and User Credentials in CSS on page 143.
   - **d** Create, update, or delete an SNMPv3 user. See Adding or Modifying an SNMPv3 User in CSS on page 146.
   - **e** Verify the SNMPv3 credentials. See Performing an SNMPv3 Connection Verification in CSS on page 146.
   - **f** Configure Domain Name Services (DNS). See “Configuring DNS in CSS” in the *Authentication Services* manual.
   - **g** Set the Software Download (SWDL) transfer mode. See Setting the SWDL Transfer Mode in CSS on page 147.

h Configure for Secure SHell (SSH). See Chapter 4, “Configuring SSH for RF Site Devices and VPMs Using CSS” in the *Securing Protocols with SSH* manual.

i Enable RADIUS Authentication. See Chapter 7, “Configuring RADIUS Sources and Parameters Using CSS” in the *Authentication Services* manual. Make sure that the devices have been added to the RADIUS servers on the domain controllers as RADIUS clients.

j Enable Centralized Authentication. See Chapter 7, “Enabling/Disabling Centralized Authentication Using CSS” in the *Authentication Services* manual.

k Set the Local Cache Size for Centralized Authentication. See Chapter 7, “Setting the Local Cache Size for Central Authentication Using CSS” in the *Authentication Services* manual.

l Customize the login banner text (optional). See Customizing the Login Banner in CSS on page 146.

m Enable Centralized Event Logging (optional). See Chapter 6, “Enabling/Disabling Centralized Event Logging on Devices Using CSS” in the *Centralized Event Logging* manual.

n Set the Network Time Protocol (NTP) Server Settings. See NTP Server Settings in CSS on page 148.

3 Set up the local Password Configuration (optional). See Setting the Local Password Configuration in CSS on page 149.

4 Continue to one of the following depending on the type of device you are configuring:

- Setting CSS Configuration Parameters for the GTR 8000 Base Radio (Trunked Simulcast) on page 150
- Setting CSS Configuration Parameters for the GTR 8000 Base Radio (Trunked Repeater) on page 151.
- Setting CSS Configuration Parameters for the GTR 8000 Base Radio (HPD) on page 151.
- Setting CSS Configuration Parameters for the GTR 8000 Base Radio (Conventional) on page 152.

4.4.2
Connecting Through a Serial Port Link

Prerequisites: This procedure assumes that the Configuration/Service Software (CSS) application is loaded on your service computer/laptop. See the *Private Network Management Client* manual.

When and where to use: This procedure describes the steps required to connect through a serial port link to set the IP address of the device and to set the serial security services. Perform all other device function and feature configurations through an Ethernet port connection in the CSS.

Procedure:

1 Connect a serial cable to a service computer/laptop running CSS, and the serial connector on the device module. The serial cable is an RS232, female DB-9 to male DB-9 straight through cable. If the service computer/laptop does not have a serial port, use a USB-to-serial converter external device.

2 Open the CSS application.

3 From the menu, select **Tools** → **Connection Configuration**.

The **Connection Screen** dialog box appears.

4 In the **Connection Type** area, select **Serial**.

The **Serial Settings** area on the dialog box becomes enabled.

5 In the **Serial Port** field, select the communication port that matches the one selected on the service computer/laptop.

6 In the **Baud Rate** field, select the baud rate with which you want to communicate with the device.

- Baud Rate 19200

7 Click **Connect**.

A login/password prompt screen appears.

Figure 55: CSS Login Banner

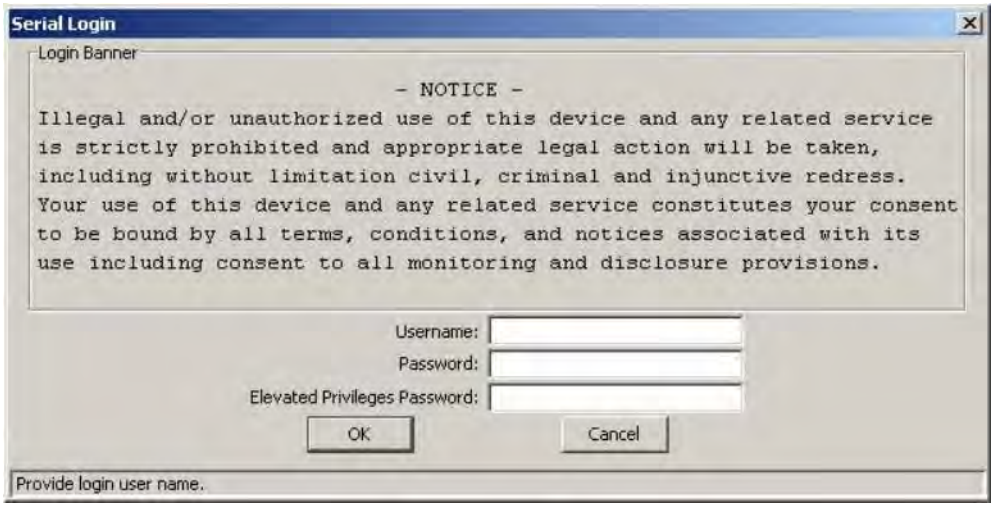

8 Provide the required credentials. Perform one of the following actions:

- If a domain controller is available on the network, enter the **Username** and **Password** for the RADIUS service user account assigned to the netwadm group in the Active Directory. (The default service user is `serviceuser`.)
- If a domain controller is not available on the network, enter the **Username** and **Password** for the local bts_service account.
- If the **Elevated Privileges Password** field is active, enter the **Elevated Privileges Password** that was set up for this device.

When accessing the device, if the default passwords do not work, the passwords may have been set to default values by a different system release of software. See "Resetting Device Passwords" in the *CSS Online Help* to reset the passwords to the current software release defaults. If Authentication Services are not enabled on a device, type any alphanumeric characters to populate the [**Username**, **Password**, and **Elevated Privileges Password**] fields, as they cannot be left blank.

9 To access the device and close the dialog box, click **OK**.

The blank CSS main window appears.

NOTICE: The **Service** menu is not available until you read the configuration file from the device using an Ethernet connection.

4.4.3
Serial Connection Configurations

The following procedures set configuration parameters in the Configuration/Service Software (CSS) using a serial connection.

4.4.3.1
Setting the Device IP Address and Pairing Number in CSS

Prerequisites: Obtain the required credentials information (local service account password and elevated privileges password) to configure the site devices before proceeding. The user credentials information includes both the current and new credentials. Without the current credentials, access to the device or to the user credentials is denied. See Local Password and SNMPv3 Passphrase Troubleshooting on page 218.

NOTICE: Setting or changing the device IP Address causes the SNMPv3 configuration and user credentials to automatically reset.

Procedure:

1. Connect to the device using Configuration/Service Software (CSS) through a serial port link. See Connecting Through a Serial Port Link on page 135.
2. From the menu, select **Tools** → **Set IP Address/BR_CM Pairing Number**.

   NOTICE: If the device is not in a voting or simulcast IP only topology, the menu item is shown as **Set IP Address/Box Number**.

   The **Set IP Address and Base Radio/Comparator Pairing Number** dialog box appears or the **Set IP Address and Box Number** dialog box appears.
3. In the **Device IP Address** field, enter the device IP address. Click **Set Device IP Address**.
4. In a voting or simulcast IP only topology, enter the device pairing number. Click **Set BR/CM Pairing Number**.
5. Click **OK** to close the dialog box.
6. Click **Reset** to initiate a hardware restart.

   SNMPv3 user credentials reset to their factory default values.
7. Click **Close** to close the dialog box.
8. To reconfigure the SNMPv3 user credentials, see Changing SNMPv3 Configuration and User Credentials in CSS on page 143.

4.4.3.2
Pairing To a Comparator

When operating in a voting, multicast, or IP simulcast configuration, base radios must be paired to comparators using the **BR/CM Pairing Number**. The **BR/CM Pairing Number** for the base radio and comparator is used to create an IP multicast group that allows the base radio and comparator to talk to each other. The base radio listens for messages that the comparator sends to establish an IP connection with all the paired base radios. When the base radio receives the message from the comparator, it extracts the comparator IP address from the message and uses it to send received voice and data back to the comparator.

Communication from the comparator to the paired base radio always uses a multicast IP address. Communication between the paired base radio to the comparator always uses a unicast IP address.

The multicast IP address is calculated based on the base radio and comparator pairing number and the formula as follows:

For Conventional Systems:

224.10.100.nnn, where nnn is: (2 * channel number) - 1 for channel number between [1, 127]

224.10.101.nnn, where nnn is: (2 * (channel number – 127) - 1) for a channel number between [128, 200]

For Trunked Multi-Site Systems:

224.100.102.nnn, where nnn is: 100 + (2 * channel number) - 1

NOTICE: The **BR/CM Pairing Number** is not used for circuit (V.24 or 4-wire/V.24 hybrid link) configurations.

See Setting the Device IP Address and Pairing Number in CSS on page 137 to set the pairing number. The pairing number can also be set using an Ethernet connection. See Setting the BR/CM Pairing Number in CSS on page 142.

4.4.3.3
Serial Security Services in CSS

The Serial Security Services in Configuration/Service Software (CSS) enables the secure services and changes the device password.

NOTICE: The Serial Security Services must be set before changing the SNMPv3 configuration and user credentials on a selected device in the site.

Before enabling this parameter, any login and password may be used on the File Transfer Access Services login window to access a device. After Authentication Services are enabled, the login and password provided is checked against the following authentication sources:

Stored password
RF site devices support a configurable password for the Local Service and Elevated Privileges accounts. The password is verified against the stored password for these accounts.

Built-in logins and passwords
RF site devices support built-in login/password combinations for a login by services such as the software downloads. Only certain software download login names are authenticated in this way.

Centralized Authentication
For authentication through centralized accounts instead of Local Service, Elevated Privileges, and built-in user accounts, use the **Configure the Centralized Authentication** parameter in CSS for the Challenge Handshake Authentication Protocol (CHAP). See “Enabling/Disabling Centralized Authentication with CSS” in the *Authentication Services* manual. This procedure requires an Ethernet connection to the device being configured.

4.4.3.3.1
Setting the Serial Security Services in CSS

Prerequisites: Obtain the required credentials information (local service account password and elevated privileges password) to configure the site devices before proceeding. The user credentials information includes both the current and new credentials. Without the current credentials, you cannot access the device and cannot change the user credentials. See Local Password and SNMPv3 Passphrase Troubleshooting on page 218. Changing to the incorrect user credentials may lead to not being able to access the device through Configuration/Service Software (CSS) or Secure Shell (SSH).

Procedure:

1. Connect to the device using CSS through a serial port link. See Connecting Through a Serial Port Link on page 135.
2. From the menu, select **Security** → **Device Security Configuration** → **Security Services (Serial)**.
3. From the **Security Services Configuration** dialog box, set the **Test Application Configuration** field according to your organizational policies. The recommended secure configuration is **Disabled**.
4. Set the **Authentication Services** field to **Enabled**. Click **Apply**.

   This field enables local authentication services and must be enabled as a prerequisite for centralized authentication.
5. Set the **Password Reset Mechanism** field.

   This field allows a reset of the passwords for two built-in device accounts to their default values.
6. To update the password for the device, select either **Service Account** or **Elevated Privilege** from the drop-down list. Click **Update password**.
7. In the **Change Account Password** dialog box, enter the old password, then enter a new password, and confirm the new password before clicking **Change Password**.
8. To save the new password, click **OK**.

   The **Change Account Password** dialog box closes.

4.4.3.4
Resetting SNMPv3 User Credentials to Factory Defaults in CSS

Prerequisites: Obtain the required credentials information (local service account password and elevated privileges password) to configure the site devices before proceeding. The user credentials information includes both the current and new credentials. Without the current credentials, you cannot access the device and cannot change the user credentials. To obtain the keys for resetting either password or SNMPv3 passphrases for the device, contact Motorola Solutions Support Center (SSC). Changing to the incorrect user credentials may lead to not being able to access the device through Configuration/Service Software (CSS) or Secure SHell (SSH).

Procedure:

1. Connect to the device using CSS through a serial port link. See Connecting Through a Serial Port Link on page 135.
2. From the menu, select **Security** → **SNMPv3 Configuration** → **Reset SNMPv3 Configuration (Serial)**.

   The **Reset SNMPv3 Configuration** dialog box opens.
3. Click **Reset SMPv3 Configuration**.

   The SNMPv3 configuration is reset to factory defaults in the device.
4. Click **Exit**.

   The **Reset SNMPv3 Configuration** dialog box closes.
5. To reboot the device for the SNMPv3 user credentials to take effect, perform the following actions:

   a. From the menu, select **Tools** → **Set IP Address/Box Number** or **Set IP Address/BR_CM Pairing Number**.

b In the dialog box, click **Reset**.

The device reboots.

6 Proceed to Changing SNMPv3 Configuration and User Credentials in CSS on page 143.

4.4.4
Connecting Through an Ethernet Port Link

Prerequisites: Load Configuration/Service Software (CSS) on the service computer/laptop. See the *Private Network Management Client* manual if necessary or see the instructions in the CSS DVD jewel box for instructions on loading the CSS onto the service computer/laptop.

When and where to use: Use the Ethernet port link to configure all CSS parameters for the device.

Procedure:

1 Connect a service computer/laptop to a device using one of the following methods:

NOTICE: Normally the service computer/laptop is connected through the local site switch or remotely through the network. Do not connect directly to the Ethernet service port of the device unless downloading software or individually configuring the device.

a **Remote Connection to Network or Local Site Switch:**

1 Connect remotely to the network or to the local site switch using a straight-through an Ethernet straight-through Ethernet cable.

2 If connecting to the local site switch, configure the Ethernet interface of the service computer/laptop to a Speed/Duplex setting of **Auto-Negotiate**. Set the IP address of the service computer/laptop to an unused IP address on the subnet of the local site. The IP address on the subnet varies depending on the site and zone numbers.

b **Direct Connection to Front Ethernet Service Port:**

1 Connect directly to the front panel Ethernet service port with a straight-through Ethernet cable.

2 If connecting to a base radio or receiver, set the IP address of the service computer/laptop to 192.168.x, where x is any number between 2 and 253.

3 If connecting to a site controller or reference distribution module, set the IP address of the service computer/laptop to an unused IP address on the subnet of the local site. The IP address on the subnet varies depending on the site and zone numbers.

4 Configure the Ethernet interface of the service computer/laptop to a Speed/Duplex setting of **Auto-Negotiate**

NOTICE: The comparator does not support a direct connection to the front panel Ethernet service port. The connection must be done remotely through the network or through the local site switch.

2 Open the CSS application.

3 From the menu, select **Tools** → **Connection Configuration**.

4 From the **Connection Screen**, in the **Connection Type** area, select **Ethernet**.

5 If connected directly to the front panel Ethernet service port of a base radio or receiver, click **Front Panel Ethernet** and go to step 7.

6 Perform one of the following actions:

If…	Then…
If you know the IP address for the device,	perform the following actions: **a** In the **Device IP Address** field, enter the IP address for the device. **b** Click **Connect**. **c** Go to step 7.
Trunked Device: If you do not know the IP address, but know the system identification of the device (the zone, physical site, subsite, and device ID of the device),	perform the following actions: **a** Click **Device Name Wizard** to open the **Device Name Wizard** dialog box. **b** From the **Device** drop-down list, select the relevant device type. **c** In the **Zone**, **Physical Site**, **Subsite**, and **Device ID** fields, enter the proper values. **NOTICE:** Some fields, such as **Subsite**, do not allow entries for some devices. Therefore, select the device first. **d** Click **OK**. The Domain Name Services (DNS) information of the device automatically appears in the **Device IP Address** field. **e** Click **Connect**. **f** Go to step 7.
Conventional Device: If you do not know the IP address,	perform the following actions: **a** Establish a serial connection to the device. See Connecting Through a Serial Port Link on page 135. **b** For a base radio, receiver, or comparator, from the menu, select **Tools** → **Set IP Address/BR_CM Pairing Number**. For a site controller or reference distribution module, select **Set IP Address/Box Number**. **c** In the **Device IP Address** field, record the IP address. **d** Re-establish an Ethernet connection and repeat steps 1 through 4. **e** In the **Device IP Address** field, enter the IP address for the device. **f** Go to step 7.

7 To make the connection, click **Connect**.

If this device is SNMPv3-capable, the **SNMPv3 Passphrase Prompt** dialog box appears.

Figure 56: SNMPv3 Passphrase Prompt

8 In the **SNMPv3 Passphrase Prompt** dialog box, enter the **User Information** and **Passphrase Information**. Click **OK**. If Authentication Services are not enabled on a device, click **OK** when the dialog box appears.

9 From the menu, select **File** → **Read Configuration From Device**.

The parameters download from the device to the service computer/laptop. When the download is complete, the CSS main window opens. Use the map on the left side of the screen to view configuration information for the device.

4.4.5
Ethernet Connection Configurations

The following procedures set configuration parameters in the Configuration/Service Software (CSS) using an Ethernet connection.

4.4.5.1
Setting the BR/CM Pairing Number in CSS

When and where to use:
Set the pairing number for the base radio, receiver, and comparator using Configuration/Service Software (CSS) when operating in a voting, multicast, or simulcast IP configuration using an Ethernet connection.

Procedure:

1 Connect to the device using Configuration/Service Software (CSS) through an Ethernet port link. See Connecting Through an Ethernet Port Link on page 140.

2 From the menu, select **Service** → **BR/CM Pairing Number**.

3 Enter the pairing number. Click **OK**.

The pairing number is set.

4.4.5.2
Setting the Date and Time in CSS

This procedure provides the date and time to the device.

When and where to use: During installation, the date and time is set through an Ethernet cable connected directly to the Ethernet port of the device. After installation, this procedure may be performed remotely.

NOTICE: If a power outage occurs, the device does not retain the date and time settings.

Procedure:

1 Connect to the device using CSS through an Ethernet port link. See Connecting Through an Ethernet Port Link on page 140.

2 From the menu, select **Tools** → **Set Device Date and Time**.

3 Enter the current date and time. Click **OK**.

The date and time are set.

4.4.5.3
Changing SNMPv3 Configuration and User Credentials in CSS

Prerequisites: Obtain the required SNMPv3 credentials information (Authentication passphrase, Encryption passphrase, and Authoritative Engine ID) to configure the device before proceeding. The user credentials information includes both the current and new credentials. Without the current credentials, you cannot access the device and cannot change the user credentials. See Local Password and SNMPv3 Passphrase Troubleshooting on page 218. Changing to the incorrect user credentials may lead to not being able to access the device from the Unified Network Configurator (UNC), or for the device to be unable to send alarms to the Unified Event Manager (UEM) (for fault management).

When and where to use: This procedure changes the SNMPv3 configuration and user credentials from Configuration/Service Software (CSS) on a selected device in the site. For more information on this feature, see the *SNMPv3* manual.

NOTICE: During installation, perform this procedure through an Ethernet cable connected directly to the Ethernet port of the device. After installation, this procedure may be performed remotely from CSS.

Procedure:

1 Connect to the device using CSS through an Ethernet port link. See Connecting Through an Ethernet Port Link on page 140.

2 From the menu, select **Security** → **SNMPv3 Configuration** → **Configure SNMPv3 Users (Ethernet)**.

The **SNMPv3 Passphrase Prompt** dialog box appears with **MotoAdmin** as the selected SNMPv3 user.

3 In the **SNMPv3 Passphrase Prompt**, enter the appropriate **Authentication** and **Encryption Passphrases** in the text fields.

NOTICE: When accessing the device for the first time, if the default passphrases do not work, the passphrases may have been set to default values by a different system release of software. See “Reset SNMPv3 Configuration (Serial)” in the *CSS Online Help* to reset the passphrases to the current software release defaults.

4 If connecting remotely through the network to a different device, perform one of the following actions. Otherwise, go to step 5.

If…	Then…
If you know the IP address for the device,	perform the following actions: **a** In the **Device IP Address** field, enter the IP address for the device. **b** Go to step 5.
If you do not know the IP address, but know the system identification of the device (the zone, physical site, subsite, and device ID of the device),	perform the following actions: **a** Click **Device Name Wizard**. **b** From the **Device** list box, select the desired device type. **c** In the **Zone**, **Physical Site**, **Subsite**, and **Device ID** fields, enter the proper values. **NOTICE:** Some fields, such as **Subsite**, do not allow entries for some devices. Therefore, select the device first. **d** Click **OK**. The Domain Name Services (DNS) information of the device automatically appears in the **Device IP Address** field. **e** Click **Connect**. **f** Go to step 5.

5 Click **OK**.

If the passphrases are authenticated, the **Configure SNMPv3 Users** window appears. If the connection fails, a message appears.

6 To update the SNMPv3 credentials for a selected user, from the **User Information** section, select a Username in the **Username** drop-down list.

The CSS retrieves the current credentials from the device for a selected user.

NOTICE: Depending on the user selected, some fields on this dialog box become read-only or disabled. Click **Cancel** at any time to discard changes made to a selected user.

7 To change or update the SNMPv3 security level for a selected user, from the **User Information** section, select the security level in the **Security Level** drop-down list.

The security level options are:

NoAuthNoPriv
Neither the **Authentication Passphrase** nor **Encryption Passphrase** are needed for communicating with the device.

AuthNoPriv
Authentication Passphrase is needed; but no **Encryption Passphrase** is needed for communicating with the device.

AuthPriv
Both **Authentication Passphrase** and **Encryption Passphrase** are needed for communicating with the device.

The **User Status** field reflects the current operational status of the selected SNMPv3 User. The **Status Types** include:

Active
User configured on the device; the **Update** and **Delete** options are enabled.

Not in service
User configured on the device; the **Update** and **Delete** options are enabled.

Not ready
User configured on the device; the **Update** and **Delete** options are enabled.

Not present
Not present on the device; the **Create** option is enabled.

The security level of the selected user is set.

8 To change the Authentication Passphrase for the selected SNMPv3 user, if applicable to the selected security level, perform the following actions:

a From the **Authentication Passphrase** section, enter the passphrase into the **Old Passphrase** field.

NOTICE: If you do not know the passphrase, select the **I do not remember old passphrase** check box.

b Enter the new passphrase into the **New Passphrase** field.

NOTICE: The passphrase must be between 8 and 64 characters in length and consist of upper or lowercase alphanumeric characters (excluding the @ # $ ^ or _ characters).

c Enter the same new passphrase into the **Confirm New Passphrase** field.

9 To change the encryption passphrase for the selected SNMPv3 user, if applicable to the selected security level, perform the following actions:

a From the **Encryption Passphrase** section, enter the old passphrase into the **Old Passphrase** field.

NOTICE: If you do not know the passphrase, select the **I do not remember old passphrase** check box.

b Enter the new passphrase into the **New Passphrase** field.

c Enter the same new passphrase into the **Confirm New Passphrase** field.

10 To change the Authoritative Engine Identifier, applicable to MotoInformA and MotorInformB users only, perform the following actions:

a From the **Authoritative Engine ID** section, select the desired current engine ID from the **Current Engine ID** drop-down list.

b In the **New Engine ID** field, enter the new engine ID.

NOTICE: The new engine ID must be between 1 and 27 characters and comply with the Engine ID Domain Name Syntax.

11 To create, update, or delete SNMPv3 users, go to Adding or Modifying an SNMPv3 User in CSS on page 146.

4.4.5.3.1
Adding or Modifying an SNMPv3 User in CSS

When and where to use: Use this procedure to create, update, or delete an SNMPv3 user from the **Configure SNMPv3 Users** window.

Procedure:

1. From the **Configure SNMPv3 Users** window, to add or modify the selected SNMPv3 user, click one of the following:
   - **Create:** Creates a user when the status is Not Present.
   - **Update:** Updates an existing user.
   - **Delete:** Removes an existing user.

   A **Confirmation** dialog box appears and prompts if you want to continue.
2. Click **Yes**.

   The **Processing Requests** dialog box appears and processes the request. A green square X indicates OK and a red square X indicates failure.
3. After reviewing the processing status, click **OK**.

   NOTICE: If you encounter any errors, go back to the appropriate step and correct the information entered.
4. Repeat these steps for any SNMPv3 users you wish to create, update, or delete.
5. Click **Cancel** to exit the **Configure SNMPv3 Users** window.

   The **Configure SNMPv3 Users** window closes, and the CSS main window returns.

4.4.5.3.2
Performing an SNMPv3 Connection Verification in CSS

When and where to use: When the SNMPv3 user credentials have been created, modified, or deleted, ensure that the device is properly configured for SNMPv3. Follow this procedure to verify the SNMPv3 connection.

Procedure:

1. Connect to the device using Configuration/Service Software (CSS) through an Ethernet port link. See Connecting Through an Ethernet Port Link on page 140.
2. When the passphrase prompt screen opens, select the configured security level and enter the required passphrases.
3. If the connection was successful, click **OK**.

4.4.5.4
Customizing the Login Banner in CSS

This procedure describes how to edit the login banner security notice.

Procedure:

1. Connect to the device using Configuration/Service Software (CSS) through an Ethernet port link. See Connecting Through an Ethernet Port Link on page 140.
2. From the menu, select **Security** → **Device Security Configuration** → **Remote Access/Login Banner (Ethernet)**.

3 From the **Remote Access/Login Banner** screen, **Remote Access Configuration** tab, click the **Login Banner** tab.

4 Edit the text of the banner.

5 Click one of the following:

- **Refresh:** re-reads the original Login Banner text.
- **Apply:** saves the changes and keep the screen open.
- **OK:** saves the changes and close the screen.
- **Cancel:** closes the screen without saving the changes.

4.4.5.5
Setting the SWDL Transfer Mode in CSS

This procedure sets the Software Download Manager (SWDL) transfer mode.

When and where to use: Follow this procedure to set the SWDL transfer mode to Ftp (clear) or Sftp (secure) before performing a software download on the device.

NOTICE: The SWDL transfer mode must be set to **Ftp** (clear) if any PSC 9600, STR 3000, QUANTAR®, or ASTRO-TAC® 9600 device is present at a site.

Procedure:

1 Connect to the device using Configuration/Service Software (CSS) through an Ethernet port link. See Connecting Through an Ethernet Port Link on page 140.

2 From the menu, select **Security** → **Device Security Configuration** → **Remote Access/Login Banner (Ethernet)**.

The **Remote Access/Login Banner** screen appears displaying the **Remote Access Configuration** tab.

Figure 57: Remote Access Configuration Tab

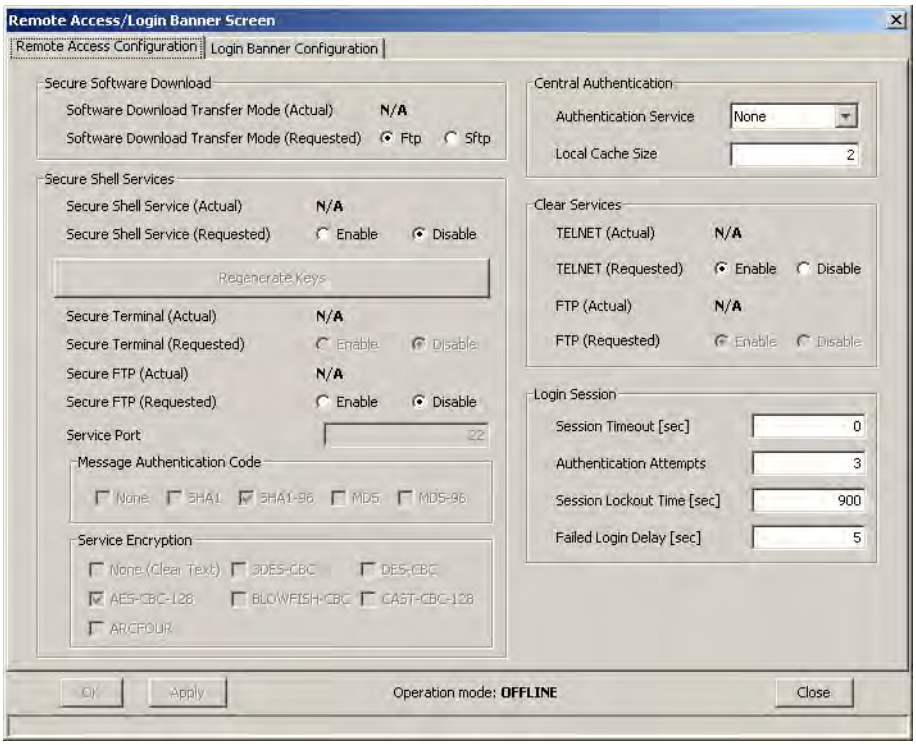

3 In the **Software Download Transfer Mode (Requested)** field, choose either **Ftp** (clear) or **Sftp** (secure). Click **OK**.

NOTICE: Secure Shell Service (Requested) and Secure FTP (Requested) are automatically set to **Enabled** and grayed out when you choose **Sftp**.

4.4.5.6
Manager IP Address Settings in CSS

When IP addresses exceed the allowed total, remove the IP addresses that are no longer used at the site. This removal allows the Unified Event Manager (UEM) to be identified as the current manager and handles traps for the device.

See “Clearing Manager IP Addresses in CSS” in the *CSS Online Help* for removing these IP addresses.

4.4.5.7
NTP Server Settings in CSS

Network Time Protocol (NTP) provides a clock synchronization mechanism for various network devices and computers, and allows the NTP server to provide the date and time synchronization for a particular device. The NTP server IP address must be entered on the **Manager / NTP Definition** screen.

For security purposes, the base radio can restrict NTP messages from only the site controller. This restriction can be accomplished by configuring two site controller IP addresses into the **NTP Server IP Address** fields on the base radio.

See “Configuring the NTP Servers” in the *CSS Online Help* for defining, editing, and removing these settings.

4.4.5.8
Setting the Local Password Configuration in CSS

When and where to use: Use this procedure to set the complexity requirements and controls for the local service account password. The updated password criteria is enforced on the next password change for the device local service account. Password Configuration is an optional feature. For information, see “Password Configuration" in the *CSS Online Help*.

Procedure:

1 Connect to the device using Configuration/Service Software (CSS) through an Ethernet port link. See Connecting Through an Ethernet Port Link on page 140.

2 In the navigation pane, click the **Password Configuration** element.

The **Password Configuration** window appears.

Figure 58: Password Configuration Window

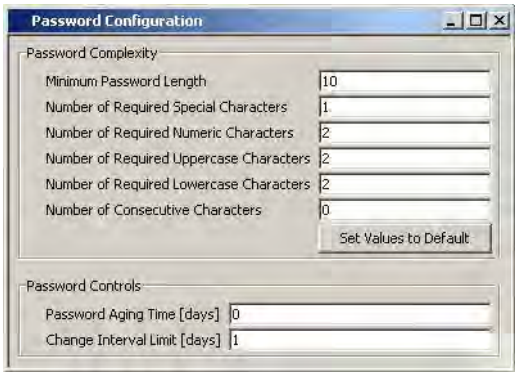

3 Complete the following fields:

Minimum Password Length
This field allows you to enter a value as the minimum length for the password. The minimum can be between 8 and 255 characters, with a default of 10 characters.

Number of Required Special Characters
This field allows you to enter a value for the required number of special characters which must be included in the password. The value can be between 0 and 255, with a default of 1.

Number of Required Numeric Characters
This field allows you to enter a value for the required number of numeric characters which must be included in the password. The value can be between 0 and 255, with a default of 2.

Number of Required Uppercase Characters
This field allows you to enter a value for the required number of uppercase alphabetic characters which must be included in the password. The value can be between 0 and 255, with a default of 2.

Number of Required Lowercase Characters
This field allows you to enter a value for the required number of lowercase alphabetic characters which must be included in the password. The value can be between 0 and 255, with a default of 2.

Number of Consecutive Characters
This field allows you to enter the maximum number of consecutive repeated characters permitted in the password.

Set Values to Default
This field returns all fields to their system default values.

Password Aging Time [days]
This field allows you to enter a value between 0 and 65535 for the maximum number of days a local password is valid. After the **Password Aging Time** has elapsed, the password must be changed. The default value is 0.

Change Interval Limit [days]
This field allows you to enter a value between 0 and 65535 for the number of days which must elapse before a local password can be changed. The default value is 1.

4.4.6

Setting CSS Configuration Parameters for the GTR 8000 Base Radio (Trunked Simulcast)

Prerequisites:
Before proceeding with this process, complete the initial configuration of the device in CSS Initial Device Configuration on page 134.

For configuration parameters on each field for a trunked simulcast GTR 8000 Base Radio, see “Multi-Site or Simulcast Subsystem” in the *CSS Online Help*.

Process:

1. Connect to the base radio through an Ethernet port link and then read the configuration file from the base radio. See Connecting Through an Ethernet Port Link on page 140.
2. In the **System** tree, click **System** and complete the fields.
3. In the **System** tree, click **Site** and complete the fields.
4. In the **System** tree, click **Channel** and complete the fields.
5. In the **System** tree, click **Subsite** and complete the fields.
6. In the **System** tree, click **Configuration** and complete the fields on all four tabs.

   NOTICE: As part of Remote Multicoupler (RMC) configuration, set the DIP switches on the RMC/Low Noise Amplifier (LNA) modules. See Setting RMC System Gain on page 154.

7. In the **System** tree, click **Network Services Configuration** and complete the fields on the three tabs.

   NOTICE: For configuration details for DNS and RADIUS Services, see the *Authentication Services* manual. For configuration details for SYSLOG Services, see the *Centralized Event Logging* manual.

8. In the **System** tree, click **Password Configuration** and complete the fields.

   NOTICE: Password Configuration is only required if you have passwords entered for local accounts and sets the password complexity and controls. For details on password complexity and controls, see “Password Configuration” in *CSS Online Help*.

9. In the **System** tree, click **Enhanced Data Configuration** to view the fields.
10. From the menu, select **File** → **Save As** to save the configuration data to a new archive file or select **File** → **Save** to overwrite the existing archive file.

    IMPORTANT: Save any configuration changes to a local or network drive so that if the base radios transceiver module fails, you can load your settings to a replacement base radio transceiver. If the configuration file is not saved to a local or network drive, repeat the setup steps after replacing a transceiver module.

11. From the menu, select **File** → **Write Configuration to Device** to write the configuration data to the base radio.

4.4.7

Setting CSS Configuration Parameters for the GTR 8000 Base Radio (Trunked Repeater)

Prerequisites:
Before proceeding with this process, complete the initial configuration of the device in CSS Initial Device Configuration on page 134.

For configuration parameters for a trunked Repeater GTR 8000 Base Radio, see “Repeater Site Subsystem” in the *CSS Online Help*.

Process:

1. Connect to the base radio through an Ethernet port link and then read the configuration file from the base radio. See Connecting Through an Ethernet Port Link on page 140.
2. In the **System** tree, click **System** and complete the fields.
3. In the **System** tree, click **Zone** and complete the fields.
4. In the **System** tree, click **Site** and complete the fields.
5. In the **System** tree, click **Channel** and complete the fields.
6. In the **System** tree, click **Configuration** and complete the fields on all four tabs.

   NOTICE: As part of Remote Multicoupler (RMC) configuration, set the DIP switches on the RMC/Low Noise Amplifier (LNA) modules.. See Setting RMC System Gain on page 154.

7. In the **System** tree, click **Network Services Configuration** and complete the fields on the three tabs.

   NOTICE: For configuration details for DNS and RADIUS Services, see the *Authentication Services* manual. For configuration details for SYSLOG Services, see the *Centralized Event Logging* manual.

8. In the **System** tree, click **Password Configuration** and complete the fields.

   NOTICE: Password Configuration is only required if you have passwords entered for local accounts and sets the password complexity and controls. For details on password complexity and controls, see “Password Configuration” in *CSS Online Help*.

9. In the **System** tree, click **Enhanced Data Configuration** to view the fields.
10. From the menu, select **File** → **Save As** to save the configuration data to a new archive file, or select **File** → **Save** to overwrite the existing archive file.

    IMPORTANT: Be sure to save any configuration changes to a local or network drive so that if the base radios transceiver module fails, you can load your settings to a replacement base radio transceiver. If the configuration file is not saved to a local or network drive, you will need to repeat the setup steps after replacing a transceiver module.

11. From the menu, select **File** → **Write Configuration to Device** to write the configuration data to the base radio.

4.4.8

Setting CSS Configuration Parameters for the GTR 8000 Base Radio (HPD)

Prerequisites:
Before proceeding with this process, complete the initial configuration of the device in CSS Initial Device Configuration on page 134.

For configuration parameters for an HPD GTR 8000 Base Radio, see “HPD Remote/Expandable Site” in the *CSS Online Help*.

Process:

1. Connect to the base radio through an Ethernet port link and then read the configuration file from the base radio. See Connecting Through an Ethernet Port Link on page 140.
2. In the **System** tree, click **System** and complete the field.
3. In the **System** tree, click **Site** and complete the fields.
4. In the **System** tree, click **Channel** and complete the fields.
5. In the **System** tree, click **Configuration** and complete the fields on all four tabs.

   NOTICE: As part of Remote Multicoupler (RMC) configuration, set the DIP switches on the RMC/Low Noise Amplifier (LNA) modules. See Setting RMC System Gain on page 154.

6. In the **System** tree, click **Network Services Configuration** and complete the fields on the three tabs.

   NOTICE: For configuration details for DNS and RADIUS Services, see the *Authentication Services* manual. For configuration details for SYSLOG Services, see the *Centralized Event Logging* manual.

7. In the **System** tree, click **Password Configuration** and complete the fields.

   NOTICE: Password Configuration is only required if you have passwords entered for local accounts and sets the password complexity and controls. For details on password complexity and controls, see “Password Configuration” in *CSS Online Help*.

8. From the menu, select **File** → **Save As** to save the configuration data to a new archive file, or select **File** → **Save** to overwrite the existing archive file.

   IMPORTANT: Be sure to save any configuration changes to a local or network drive so that if the base radio fails, you can load your settings to a replacement base radio. If the configuration file is not saved to a local or network drive, you will need to repeat the setup steps after replacing a base radio.

9. From the menu, select **File** → **Write Configuration to Device** to write the configuration data to the base radio.

4.4.9
Setting CSS Configuration Parameters for the GTR 8000 Base Radio (Conventional)

Prerequisites:
The **Ethernet Type** field for a standalone conventional base radio must be set to 10 Mbit, half-duplex.

Before proceeding with this process, complete the initial configuration of the device in CSS Initial Device Configuration on page 134.

For configuration parameters for a conventional GTR 8000 Base Radio, see the following in the *CSS Online Help*:

- **Analog-only, Digital-only, or Mixed Mode GTR 8000 Base Radio:** Conventional Site - ASTRO 7.12 and Later

Process:

1. Connect to the base radio through an Ethernet port link and then read the configuration file from the base radio. See Connecting Through an Ethernet Port Link on page 140.
2. In the **System** tree, click **Site** and complete the fields.

3 In the **System** tree, click **Hardware Configuration** and complete the fields on the two tabs.

NOTICE: As part of Remote Multicoupler (RMC) configuration, you must set the DIP switches on the RMC/Low Noise Amplifier (LNA) modules. See Setting RMC System Gain on page 154.

4 In the **System** tree, click **Options** and complete the fields.

5 In the **System** tree, click **Infrastructure Interface** and complete the fields on the three tabs.

6 In the **System** tree, click **Channel Configuration** and complete the fields.

7 In the **System** tree, click **Repeater Configuration** in the **System** tree and complete the fields.

8 In the **System** tree, click **Receiver Scan** and complete the fields.

9 In the **System** tree, click **Repeater Access** and complete the fields.

10 In the **System** tree, click **WildCard Tables** and complete the fields on the three tabs.

11 In the **System** tree, click **Network Services Configuration** and complete the fields on the three tabs.

NOTICE: For configuration details for RADIUS Services, see the *Authentication Services* manual. For configuration details for SYSLOG Services, see the *Centralized Event Logging* manual.

12 In the **System** tree, click **Password Configuration** and complete the fields.

NOTICE: Password Configuration is only required if you have passwords entered for local accounts and sets the password complexity and controls. For details on password complexity and controls, see “Password Configuration” in *CSS Online Help*.

13 From the menu, select **File** → **Save As** to save the configuration data to a new archive file, or select **File** → **Save** to overwrite the existing archive file.

IMPORTANT: Be sure to save any configuration changes to a local or network drive so that if the base radio fails, you can load your settings to a replacement base radio. If the configuration file is not saved to a local or network drive, you will need to repeat the setup steps after replacing a base radio.

14 From the menu, select **File** → **Write Configuration to Device** to write the configuration data to the base radio.

4.4.10
Configuring Tx Power Values and Battery Type

When and where to use: As part of the site configuration process, the **Battery Type**, **Tx Power Level (Battery Backup)**, and **Tx Power Out** on the **Hardware Configuration** tab in Configuration/Service Software (CSS) must be configured.

Procedure:

1 Connect to the device through an Ethernet port link and read the configuration file from the device. See Connecting Through an Ethernet Port Link on page 140.

2 From the navigation tree, select **Configuration**.

The **Configuration** window appears.

3 Select the **Hardware Configuration** tab.

4 In the **Tx Power Out (Watts)** field, enter a value.

5 In the **Tx Power Level Battery Backup (Watts)** field, enter a value.

6 Select the **Battery Type** (manufacturer and model, or select the generic listing for the class of battery).

7 From the menu, select **File** → **Save**, or select**File** → **Save As** to save the configuration to an archive on your local or network drive.

8 From the menu, select **File** → **Write Configuration to Device** to write the configuration to the device.

4.4.11
Setting RMC System Gain

When and where to use:
The Receive Multicoupler (RMC) system gain must be set up according to your GTR 8000 Base Radio configuration.

NOTICE: For base radios, calculate and enter a value for system gain. Calculate the system gain from the receiver multicoupler input to the base radios Rx input. If there is no multicoupler, enter zero.

Procedure:

1 Open Configuration/Service Software (CSS).

2 Connect to the device through an Ethernet port link. Read the configuration file from the device. See Connecting Through an Ethernet Port Link on page 140.

3 From the menu, select **File** → **Read Configuration from Device**.

4 From the navigation tree, select **Configuration**.

5 Select the **Receive Multicoupler (RMC) Configuration** tab.

6 In the **GTR 8000 Configuration** field, select **GTR 8000 Base Radio Standalone**.

7 In the **System Gain** field, enter a dB value.

8 From the menu, select **File** → **Save** or **File** → **Save As** to save the RMC configuration to an archive on your local or network drive.

9 From the menu, select **File** → **Write Configuration to Device** to write the configuration data to the base radios.

The RMCs automatically use the resulting system gain. In addition, an appropriate transceiver attenuation is automatically calculated and saved in the configuration file.

4.5
Configuring Centralized Authentication on Devices in VoyenceControl

When and where to use: This process provides the procedures for configuring centralized authentication on devices using the VoyenceControl component of the Unified Network Configurator (UNC) application.

NOTICE: VoyenceControl does not apply for a K core or non-networked site.

Process:

1 Configure Domain Name Service (DNS) on the device. See “DNS Configuration on RF Site and VPM Devices with VoyenceControl” in the *Authentication Services* manual.

2. Configure Authentication Sources for the device. See “Centralized Authentication Configuration on RF Site and VPM Devices with VoyenceControl" in the *Authentication Services* manual.
3. Configure RADIUS parameters for the device. See “Configuring RADIUS on RF Site and VPM Devices with VoyenceControl” in the *Authentication Services* manual.
4. Set the Local Cache Size for Centralized Authentication for the device. See “Setting the Local Cache Size for Central Authentication on RF Site and VPM Devices with VoyenceControl” in the *Authentication Services* manual.
5. Enable/Disable Centralized Authentication for the device. See “Centralized Authentication Configuration on RF Site and VPM Devices with VoyenceControl” in the *Authentication Services* manual.
6. Enable/Disable Centralized Event Logging for the device. See “Enabling/Disabling Centralized Event Logging on RF Site Devices and VPMs with EMC Smarts” in the *Centralized Event Logging* manual.

Chapter 5

GTR 8000 Base Radio Optimization

Your Motorola Solutions Field Representative or Motorola Solutions Support Center (SSC) can advise you on optimization activities required for your system, if any. See Motorola Solutions Support Center on page 219.

This chapter contains optimization procedures and recommended settings relating to GTR 8000 Base Radio.

5.1 Aligning the Internal Frequency Reference Oscillator

The transceiver option card within a base radio provides an internal 10 MHz frequency reference which can be used as the primary or backup frequency reference source for the device. For conventional base radio operation, it also provides the analog interfaces and wildcard I/Os.

After a base radio is installed or after the transceiver option card is replaced, align the internal frequency reference oscillator.

Align the transceiver option card internal frequency reference oscillator to within 1 ppb (parts per billion). The measuring equipment used to make this alignment must be accurate to within 1 ppb. This accuracy typically requires test equipment with a double oven or a Rubidium reference oscillator.

NOTICE: The base radio must be turned on for at least one week before the internal frequency reference oscillator is aligned.

Align the internal frequency reference oscillator for an Oven Controlled Crystal Oscillator (OCXO) transceiver option card:

- Upon installation of the base radio for all bands.
- Once every two years after installation for 700/800 MHz systems.
- Once every five years after installation for UHF systems.
- VHF systems do not require alignment after initial installation.

Align the internal frequency reference oscillator for a Temperature Compensated Crystal Oscillator (TCXO) transceiver option card:

- Upon installation of the base radio for UHF.
- Every year after installation for UHF.

The internal frequency reference oscillator can be aligned using two methods: manual alignment or auto alignment.

See “**Base Radio Service Help** → **Service Screens** → **Alignment Screens**” in the *CSS Online Help* for the alignment procedures.

5.1.1
GTR 8000 Base Radio Time and Frequency Inputs

Various external time and frequency inputs can be provided to the base radio for normal operation or for Internal Frequency Reference Oscillator alignment. The following table provides a list of acceptable input signal types and levels for each input port.

Table 46: Time and Frequency Inputs

Input Port	Frequency	Waveform	Level	Impedance	Note
Ext Freq Ref	5 MHz	Sine	2.6–5.3 Vpp	100k ohms	AC coupled
Ext Freq Ref	5 MHz	Square	45–55% duty cycle	100k ohms	AC coupled
Ext Freq Ref	10 MHz	Sine	2.6–5.3 Vpp	100k ohms	AC coupled
Ext Freq Ref	10 MHz	Square	45-55% duty cycle	100k ohms	AC coupled
Ext Freq Ref	20 MHz	Sine	2.6–5.3 Vpp	100k ohms	AC coupled
Ext Freq Ref	20 MHz	Square	45–55% duty cycle	100k ohms	AC coupled
Ext Freq Ref	5 MHz/ 1PPS*	Square	2.6–5.3 Vpp	100k ohms	AC coupled; 25% modulation 1pps arrives on 75% duty cycle
1PPS	1PPS	Pulse	2.6–5.3 Vpp	100k ohms	DC coupled
Front Panel Ext Freq Ref	5 MHz	Sine	2–5 Vpp; 10–18 dBm	50 ohms	AC coupled
Front Panel Ext Freq Ref	5 MHz	Square	45–55% duty cycle	50 ohms	AC coupled
Front Panel Ext Freq Ref	10 MHz	Sine	2–5 Vpp; 10–18 dBm	50 ohms	AC coupled
Front Panel Ext Freq Ref	10 MHz	Square	45–55% duty cycle	50 ohms	AC coupled
Front Panel Ext Freq Ref	5 MHz/ 1PPS*	Square	2.6–5.3 Vpp	50 ohms	AC coupled; 25% modulation 1pps arrives on 75% duty cycle

* 25% modulation, 1PPS arrives on 75% duty cycle.

NOTICE: The Front Panel EXT FREQ REF connection is the Frequency Calibrator (BNC connector) on the transceiver module.

5.2 Battery Equalization

Battery Equalization configures the power supply to set the proper charge and capacity for the storage batteries connected to the base radio. Sites equipped with storage batteries that provide power in case of primary power failure require that the battery cells be equalized periodically.

See "**Base Radio Service Help** → **Service Screens** → **Alignment Screens**" in the *CSS Online Help* for the alignment procedures.

NOTICE: Some batteries do not require equalization. See the battery manufacturer recommendations.

5.3 ASTRO Simulcast Alignment (Trunked Operation)

ASTRO® 25 Simulcast Alignment is used to enter a Launch Time Offset value (range 0.0 to 1000.0 usec), store the value in the base radio, and initiate a simulcast test pattern.

See "Base Radio Service Help → Service Screens → Alignment Screens" in the *CSS Online Help* for the alignment procedures.

5.4 ASTRO/Analog Simulcast Alignment (Conventional Operation)

In an ASTRO® 25 simulcast subsystem, all station transmitters are synchronized to a 1 pulse per second (1PPS) signal from a Global Navigation Satellite System (GNSS) receiver. The 1PPS signal provides a common time reference for each of the transmitters. The ASTRO® 25 signaling information arriving at the station transmitter includes timestamps that specify the transmit offset delay for the voice and data transmissions.

The ASTRO®/Analog Alignment screen allows adjustment of the overlap coverage areas, and to specify a launch time offset value, with a 0.1 µs resolution. This value is added to the arriving launch time value to provide an adjusted launch time. The specified ASTRO® 25 simulcast transmit offset delay value applies only to ASTRO® 25 simulcast subsystems and is considered optional. The default offset value is 0 (zero), causing no adjustment to the launch time specified by the arriving timestamp value.

For Analog Simulcast, the Transmit Offset Delay merely delays the Analog Simulcast Audio to provide the adjustment in the overlap coverage areas.

See "**Base Radio Service Help** → **Service Screens** → **Alignment Screens**" in the *CSS Online Help* for the alignment procedures.

5.5 Carrier Squelch Alignment

A Carrier Squelch (CSQ) Alignment is typically performed at an RF level which corresponds to 12 dB SINAD, or an RF level which corresponds to 20 dB quieting, or any other RF level selected.

The **CSQ Alignment** screen facilitates the measurement of 12 dB SINAD for the base radio under testing by allowing the Rx Qualifiers to be set to Open. When the Rx Qualifiers are set to Open, receive audio is gated to the WL2 wireline port or to the speaker, regardless of the RF input level. The preferred SINAD measurement port is the WL2 wireline port; however, the speaker can also be used.

When measuring SINAD, the pre-emphasis and high pass filters are set as they would be for analog voice operation. Because the channel characteristics are different, this procedure allows for CSQ Alignment and is done for both 12.5 kHz and 25 kHz channel bandwidth. If the station is configured for only one channel bandwidth, there is no need to perform a CSQ Alignment for the other bandwidth.

See "**Base Radio Service Help → Service Screens → Alignment Screens**" in the *CSS Online Help* for the alignment procedures.

5.6 Tx Wireline Alignment

Tx Wireline Alignment is used to set the levels to result in 60% system deviation for both Wireline Level Line 1(WL1) and Wireline Level Line 3 (WL3) and for setting the Wireline Squelch levels.

See "**Base Radio Service Help → Service Screens → Alignment Screens**" in the *CSS Online Help* for the alignment procedures.

5.7 Rx Wireline Alignment

Rx Wireline Alignment is used only for a base radio that processes analog receive audio and is connected with a 2- or 4-wire link to a console or a comparator in an analog only topology or an ASTRO® 25 Analog/Mixed mode topology.

See "**Base Radio Service Help → Service Screens → Alignment Screens**" in the *CSS Online Help* for the alignment procedures.

5.8 Transmitter Testing

The Metering Screen displays current values for power supply and transmitter metering points on multi-site base radios, site repeater base radios, HPD base radios, and digital conventional base radios.

See "**Base Radio Service Help → Service Screens → Metering Screen**" in the *CSS Online Help* for the procedures for testing the transmitter.

5.9 Tuning a Preselector

The optional VHF or UHF preselector assembly is mounted on the back of a base radio. The preselector assembly is a 3-pole (UHF) or a 5-pole (VHF) bandpass filter equipped with tuning slugs to adjust the passband corresponding to the operating frequencies of the base radio. If the preselector assembly is replaced in the field, or if the base radio operating frequencies are modified, the preselector must be field tuned.

IMPORTANT: Tuning for best SINAD or Bit Error Rate (BER) response DOES NOT result in optimum tuning of the preselector assembly. Use this field tuning procedure to obtain optimum preselector performance.

The following test equipment is required to properly tune the preselector assembly:

- RF Signal Generator - Aeroflex 3900 Series Service Monitor (or equivalent)
- Dip/peak Monitor - HP435B Powermeter (or equivalent) with an HP8484A sensitive power head, Boonton Model 92E with BNC input, or Aeroflex 3900 Series Service Monitor using the spectrum analyzer function

- Torque driver capable of delivering 12 in-lb of torque and 10 mm deep well socket
- Tuning probe - Motorola Solutions Part No. 3082059X01, p/o TRN4083A tuning kit
- Flat-blade screwdriver

NOTICE: An R2600 Communications Analyzer can both generate and measure simultaneously. A service monitor may be used for either the generator or the monitor function, but not both simultaneously. When using service monitor as the signal generator, RF signal must be taken from the antenna port.

5.9.1 VHF Tuning Procedures

VHF tuning procedures include the following:

- Calculating Proper VHF Alignment Frequency on page 160
- Preparing the Equipment for VHF Alignment on page 161
- Tuning The VHF Preselector on page 161

5.9.1.1 Calculating Proper VHF Alignment Frequency

Use either Calculating The VHF Alignment Frequency For a Single Receive Frequency on page 160 or Calculating The VHF Alignment Frequency for Multiple Receive Frequencies on page 161 to calculate the VHF alignment frequency generated by the signal generator.

5.9.1.1.1 Calculating The VHF Alignment Frequency For a Single Receive Frequency

When and where to use: For a base radio with a single receive frequency, calculate the frequency of the alignment signal as follows:

Procedure:

1. From the site documentation or the Configuration/Service Software (CSS), determine the receive frequency.
2. If the frequency is ≤148 MHz or ≥156 MHz, subtract 250 kHz. Otherwise, note the actual frequency.

   Step example: If the receive frequency is 138.575 MHz, subtract 250 kHz because the frequency is less than 148 MHz: 138.575 MHz – 250 kHz =138.325 MHz.
3. If the preselector is Range 1 (136–154 MHz), determine the alignment frequency as follows:

   If frequency (from Step 2) is > 152 MHz, alignment frequency = 152 MHz.
   Otherwise, use actual frequency from Step 2.
4. If the preselector is Range 2 (150–174 MHz), determine the alignment frequency as follows:

   If the frequency (from Step 2) is < 152 MHz, alignment frequency = 151 0.75 MHz.
   If frequency (from Step 2) is > 172 MHz, alignment frequency =172 MHz.

   Otherwise, use actual frequency from Step 2.

5.9.1.1.2

Calculating The VHF Alignment Frequency for Multiple Receive Frequencies

When and where to use: For base radio with multiple receive frequencies, calculate the frequency of the alignment signal as follows:

Procedure:

1. From the site documentation or the Configuration/Service Software (CSS), note the receive frequency for each channel.
2. Calculate a midpoint frequency as follows:

   $F_{mid} = (F_{highest} + F_{lowest}) \div 2$
3. Using F_{mid} in place of the receive frequency, perform steps 3 and 4 from Calculating The VHF Alignment Frequency For a Single Receive Frequency on page 160.

5.9.1.2

Preparing the Equipment for VHF Alignment

Perform the following procedure to prepare the equipment for VHF alignment.

Procedure:

1. Ensure the base radio (with preselector assembly) is installed in a functional station cage equipped with a power supply module.
2. Detune the preselector as follows:
   - **a** If the alignment frequency (calculated in Calculating The VHF Alignment Frequency For a Single Receive Frequency on page 160 or Calculating The VHF Alignment Frequency for Multiple Receive Frequencies on page 161) is greater than 148 MHz (Range 1) or 156 MHz (Range 2), turn the five tuning screws clockwise until 1/8 inch protrudes past each of the tension nuts.
   - **b** If the alignment frequency is less than or equal to 148 MHz (Range 1) or 156 MHz (Range 2), turn the five tuning screws counterclockwise until 3/4 inch protrudes past each of the tension nuts.
3. Using the torque driver and deep well socket, tighten the five tension nuts on the adjustment screws to 6 in-lb.
4. See Figure 59: Preselector Tuning — VHF on page 162.

5.9.1.3

Tuning The VHF Preselector

NOTICE: When tuning for peak or dip, turn the tuning screw 1/2 turn past the peak or dip to verify that you have obtained a true peak or dip. After you have found true peak or dip, turn the screw back to the location of the original peak or dip.

See the figure for the location of the tuning screws and cavity probe holes.

Figure 59: Preselector Tuning — VHF

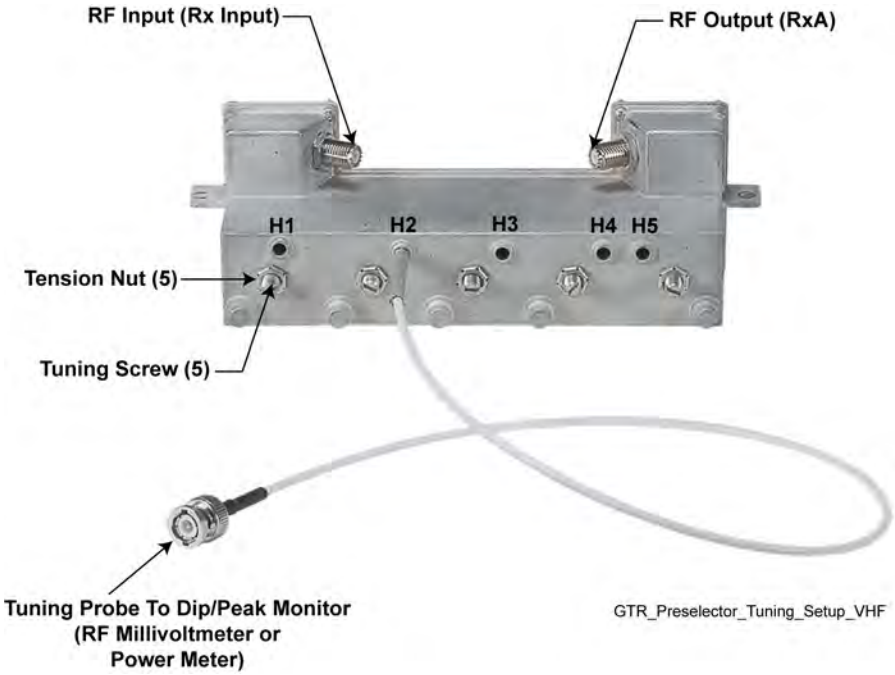

Procedure:

1. Turn the base radio power supply **ON** (to provide a 50 Ohm termination).
2. Adjust the signal generator to the frequency calculated in Calculating The VHF Alignment Frequency For a Single Receive Frequency on page 160 or Calculating The VHF Alignment Frequency for Multiple Receive Frequencies on page 161. Set the level to +5 dBm.
3. Insert tuning probe into cavity H1 and adjust tuning screw 1 for a **PEAK**.
4. Leave tuning probe in cavity H1 and adjust tuning screw 2 for a **DIP**.
5. Insert tuning probe into cavity H2 and adjust tuning screw 3 for a **DIP**.
6. Insert tuning probe into cavity H3 and adjust tuning screw 4 for a **DIP**.
7. Insert tuning probe into cavity H4. Decrease output from the signal generator to –5 dBm.
8. Adjust tuning screw 5 for a **DIP**. Then turn tuning screw 5 an additional 1/4 turn counterclockwise. (**DIP** is not as sharp for screw 5 as it was for screws 2 through 4.)

5.9.2 UHF Tuning Procedures

UHF tuning procedures include the following:

- Calculating Proper UHF Alignment Frequency on page 163
- Preparing the Equipment for UHF Alignment on page 164
- Tuning The UHF Preselector on page 164

5.9.2.1
Calculating Proper UHF Alignment Frequency

Use either Calculating The UHF Alignment Frequency For a Single Receive Frequency on page 163 or Calculating the UHF Alignment Frequency for Multiple Receive Frequencies on page 163 to calculate the alignment frequency generated by the signal generator.

5.9.2.1.1
Calculating The UHF Alignment Frequency For a Single Receive Frequency

When and where to use: For base radio with a single receive frequency, calculate the frequency of the alignment signal as follows:

Procedure:

1. From the site documentation or the Configuration/Service Software (CSS), determine the receive frequency. **Add 200 kHz**.
2. If the frequency is 380–435 MHz, determine the alignment frequency as follows:

   If frequency (from Step 1) is >431 MHz, alignment frequency = 431 MHz.

   If frequency (from Step 1) is <382 MHz, alignment frequency = 382 MHz.

   Otherwise, use actual frequency from Step 1.
3. If the frequency is 435–470 MHz, determine the alignment frequency as follows:

   If the frequency (from Step 1) is >468 MHz, alignment frequency = 468 MHz.

   If frequency (from Step 1) is <440 MHz, alignment frequency = 440 MHz.

   Otherwise, use actual frequency from Step 1.
4. If the frequency is 470–524 MHz, determine the alignment frequency as follows:

   If the frequency (from Step 1) is >518 MHz, alignment frequency = 518 MHz.

   If frequency (from Step 1) is <472 MHz, alignment frequency = 472 MHz.

   Otherwise, use actual frequency from Step 1.

5.9.2.1.2
Calculating the UHF Alignment Frequency for Multiple Receive Frequencies

When and where to use: For base radio with multiple receive frequencies, calculate the frequency of the alignment signal as follows:

Procedure:

1. From the site documentation or the Configuration/Service Software (CSS), note the receive frequency for each channel.
2. Calculate a midpoint frequency as follows:

   $F_{mid} = (F_{highest} + F_{lowest}) \div 2$
3. Using F_{mid} in place of the receive frequency, perform steps 1 through 4 from Calculating The UHF Alignment Frequency For a Single Receive Frequency on page 163.

5.9.2.2

Preparing the Equipment for UHF Alignment

Perform the following procedure to prepare the equipment for UHF alignment.

Procedure:

1. Ensure the base radio (with preselector assembly) is installed in a functional station cage equipped with a power supply module.
2. Using the torque driver and deep well socket, loosen the three tension nuts on the adjustment screws.
3. Detune the preselector by turning tuning screws 3 and 4 clockwise until they bottom out. Be careful not to apply more than 3 in-lb of torque to prevent warping preselector cover and housing.
4. See Figure 60: Preselector Tuning — UHF on page 164.

5.9.2.3

Tuning The UHF Preselector

NOTICE: When tuning for peak or dip, turn the tuning screw 1/2 turn past the peak or dip to verify that you have obtained a true peak or dip. After you have found true peak or dip, turn the screw back to the location of the original peak or dip.

See the figure for the location of the tuning screws and cavity probe holes.

Figure 60: Preselector Tuning — UHF

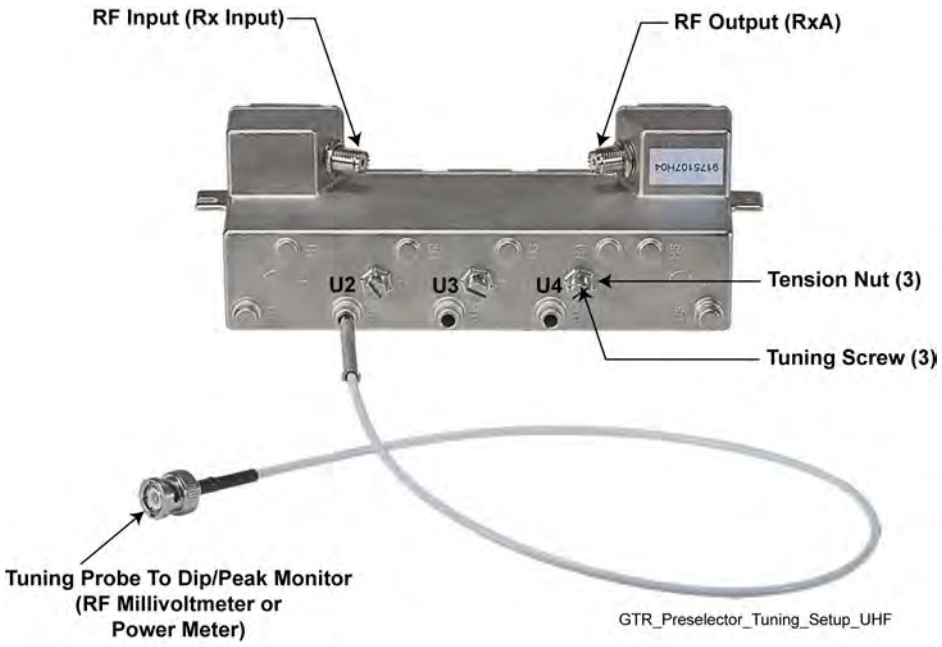

Procedure:

1. Turn the power supply **ON** (to provide a 50 Ohm termination).
2. Adjust the signal generator to the frequency calculated in Calculating The UHF Alignment Frequency For a Single Receive Frequency on page 163 or Calculating the UHF Alignment Frequency for Multiple Receive Frequencies on page 163. Set the level to +5 dBm.
3. Insert the tuning probe into cavity U2 and adjust tuning screw 2 for a **PEAK**.

4. Tighten the tension nut on tuning screw 2 to at least 12 in-lb and fine-tune tuning screw 2 for a **PEAK**.
5. Keep the tuning probe in cavity U2 and adjust tuning screw 3 for a **DIP**.
6. Tighten the tension nut on tuning screw 3 to at least 12 in-lb and fine-tune tuning screw 2 for a **DIP**.
7. Insert tuning probe into cavity U3. Decrease output from the signal generator to –5 dBm.
8. Adjust tuning screw 4 for a **DIP**.
9. Tighten the tension nut on tuning screw 4 to at least 12 in-lb and fine-tune tuning screw 4 for a **DIP**.

5.10 Tuning a Duplexer

Duplexer modules shipped with base radios are tuned at the factory. If a duplexer must be replaced in the field, the unit must be installed and tuned specifically to the transmit and receive frequency pair for the particular base radio.

5.10.1 Field Tuning Overview

NOTICE: These tuning procedures are valid for channels with a bandwidth of 200 kHz or less. If bandwidth is more than 200 kHz, the duplexer must be tuned by the Motorola Solutions Support Center (SSC).

The duplexer module is composed of three low-pass/high-notch cavities and three high-pass/low-notch cavities. Each set of three cavities provides bandpass filtering for either the transmit RF signal or the receive RF signal. In general, the duplexer must be tuned so that the transmit cavity set passes the transmit signal and rejects the receive signal; concurrently, the receive cavity set must be tuned to pass the receive signal and reject the transmit signal.

Tuning is performed by injecting RF signals and making tuning adjustments (using the tuning rods and trimmer screws) while monitoring for maximum or minimum readings on the RF millivoltmeter. Field tuning the duplexer module requires the following general adjustments:

- Tune high-pass/low-notch cavities for maximum pass and reject response
- Tune low-pass/high-notch cavities for maximum pass and reject response
- Check high-pass/low-notch and low-pass/high-notch cavities for insertion loss
- Check high-pass/low-notch and low-pass/high-notch cavities for isolation

5.10.2 Required Test Equipment

Tuning of the duplexer module requires the following test equipment:

- RF Signal Generator - Aeroflex 3900 Series Service Monitor (or equivalent)
- RF Millivoltmeter (Boonton 92E or equivalent)
- 50 Ohm N-type terminator
- Tuning tool (5/32-inch x 4-inch screwdriver) (UHF)
- Male-to-Females N-Type "T" connector (UG-107B/U or equivalent) (VHF)
- Slotted screwdriver (VHF)
- 3/32-inch Allen wrench (VHF)

- Tuning tool (thin blade) (VHF)
- N-to-N bullet connector (UG29A/U or equivalent)
- 7/16-inch Nutdriver (UHF)
- 7/16-inch Open End Wrench (UHF)
- N-to-BNC Adapter (UG349A/U)
- N-to-N Connector (UG57B/U)

5.10.3
Tuning a 700/800 MHz Duplexer

No field tuning is needed on a 700 MHz or 800 MHz duplexer. The duplexers are pre-tuned to operate over the entire sub-band.

5.10.4
Tuning a VHF Duplexer

The following procedures are most easily performed with the duplexer module removed from the rack or cabinet. Know the transmit and receive frequencies for the particular base radio before beginning.

If the duplexer module is tuned according to instructions and does not meet specifications for return loss, insertion loss, and/or isolation, the duplexer must be returned to the Motorola Solutions Support Center (SSC) for repair.

5.10.4.1
VHF Duplexer Tuning Setup

Perform the tasks in Setting Up for VHF Duplexer Tuning on page 167 before tuning the VHF duplexer module. See Figure 61: VHF Duplexer Tuning Setup on page 167.

Figure 61: VHF Duplexer Tuning Setup

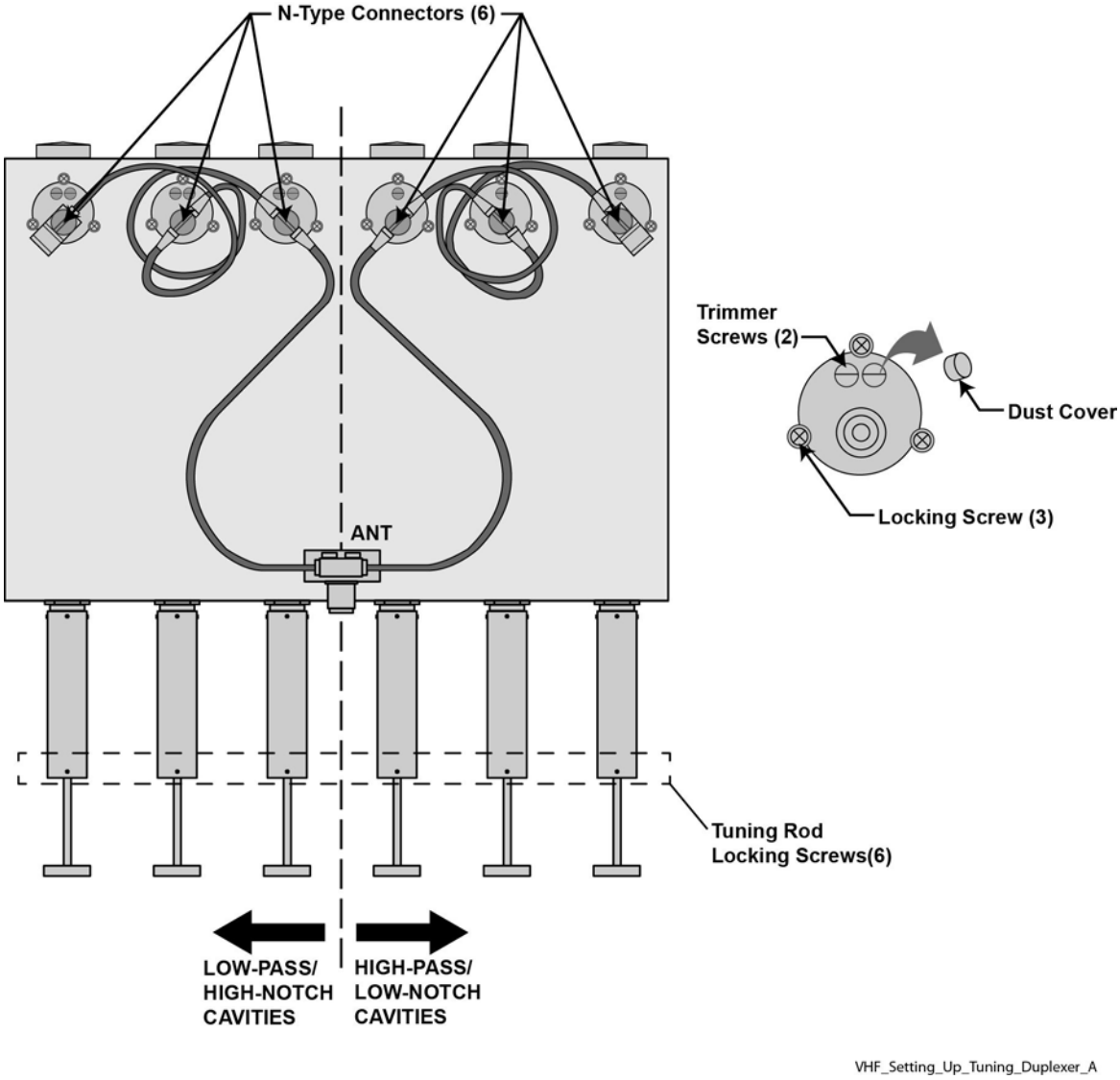

5.10.4.1.1

Setting Up for VHF Duplexer Tuning

Procedure:

1. Disconnect the six N-type connectors from each cavity.
2. For each cavity, unscrew and remove trimmer screw dust covers (9).
3. Using an Allen wrench, loosen the tuning rod locking screws (6).

5.10.4.2
VHF Duplexer Low Pass Resonators Tuning Set Up

Figure 62: Test Equipment Set Up for Tuning VHF Duplexer Low Pass Resonator

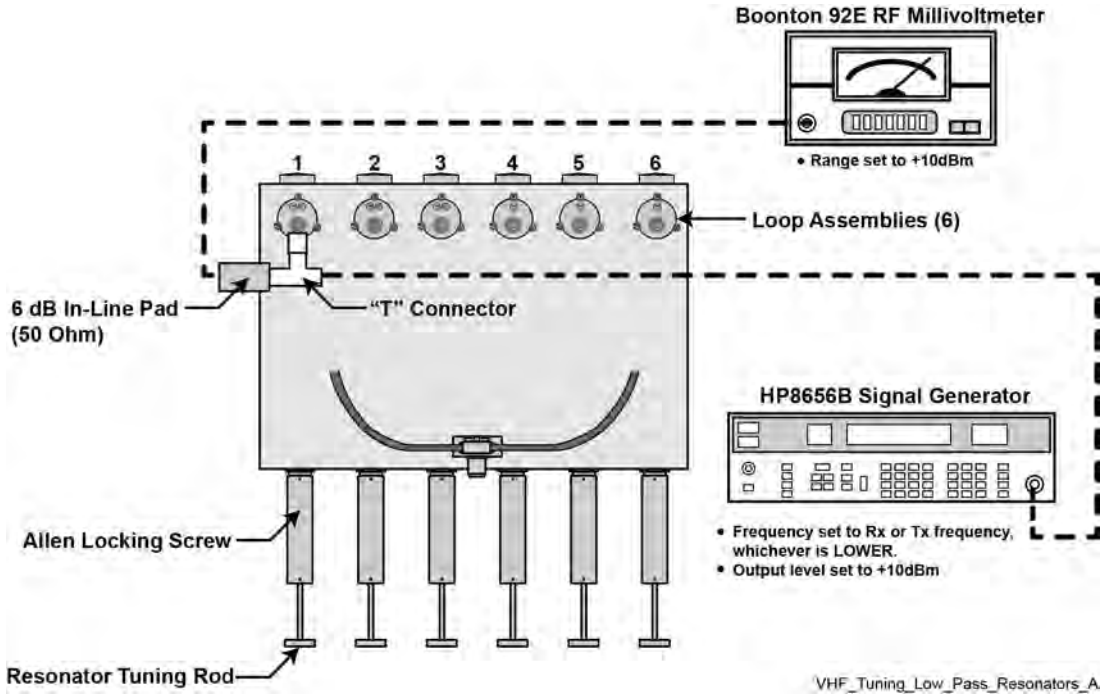

5.10.4.2.1
Tuning VHF Duplexer Low Pass Resonators

Procedure:

1. Set up test equipment as shown in Figure 62: Test Equipment Set Up for Tuning VHF Duplexer Low Pass Resonator on page 168.
2. Push or pull tuning rod for cavity #1 to obtain a **PEAK** reading on the millivoltmeter
3. Using the Allen wrench, tighten the locking screw.
4. Repeat steps 2 and 3 for cavities 2 and 3.

5.10.4.3

VHF Duplexer High Pass Resonators Tuning Set Up

Figure 63: Test Equipment Set Up for Tuning VHF Duplexer High Pass Resonator

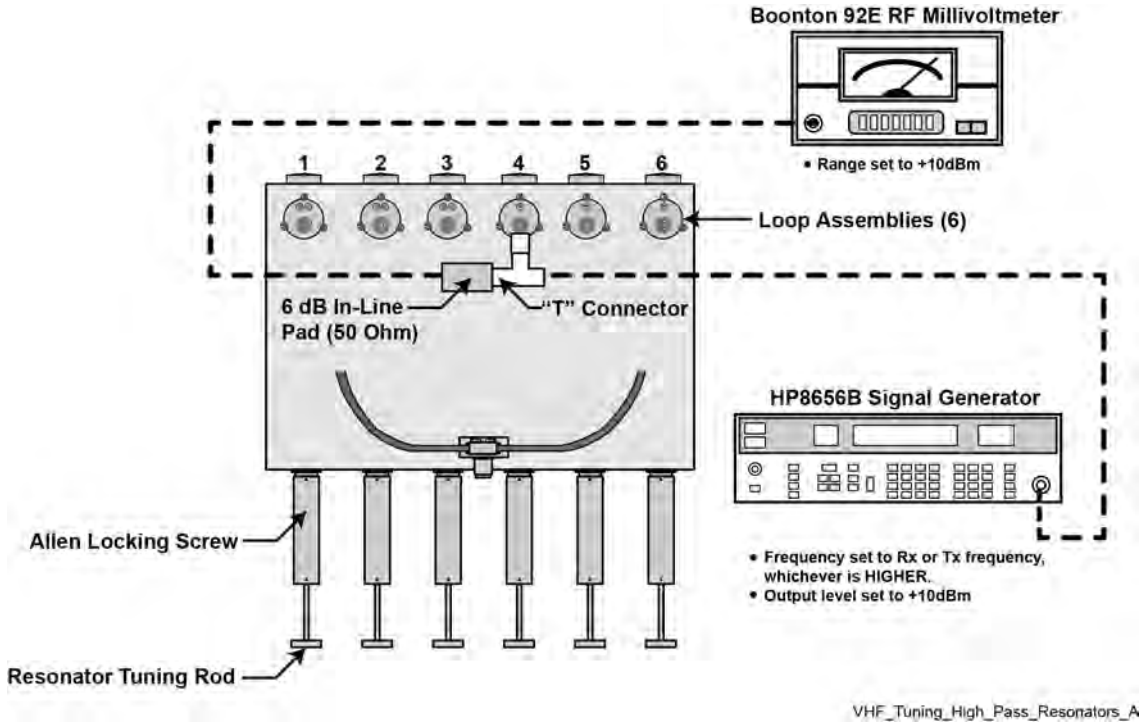

5.10.4.3.1

Tuning VHF Duplexer High Pass Resonators

Procedure:

1. Set up test equipment as shown in Figure 63: Test Equipment Set Up for Tuning VHF Duplexer High Pass Resonator on page 169.
2. Push or pull tuning rod for cavity #4 to obtain a **PEAK** reading on the millivoltmeter
3. Using the Allen wrench, tighten the locking screw.
4. Repeat steps 2 and 3 for cavities 5 and 6.

5.10.4.4
VHF Duplexer High Notch Loop Assemblies Tuning Set Up

Figure 64: Test Equipment Set Up for Tuning VHF Duplexer High Notch Loop Assemblies

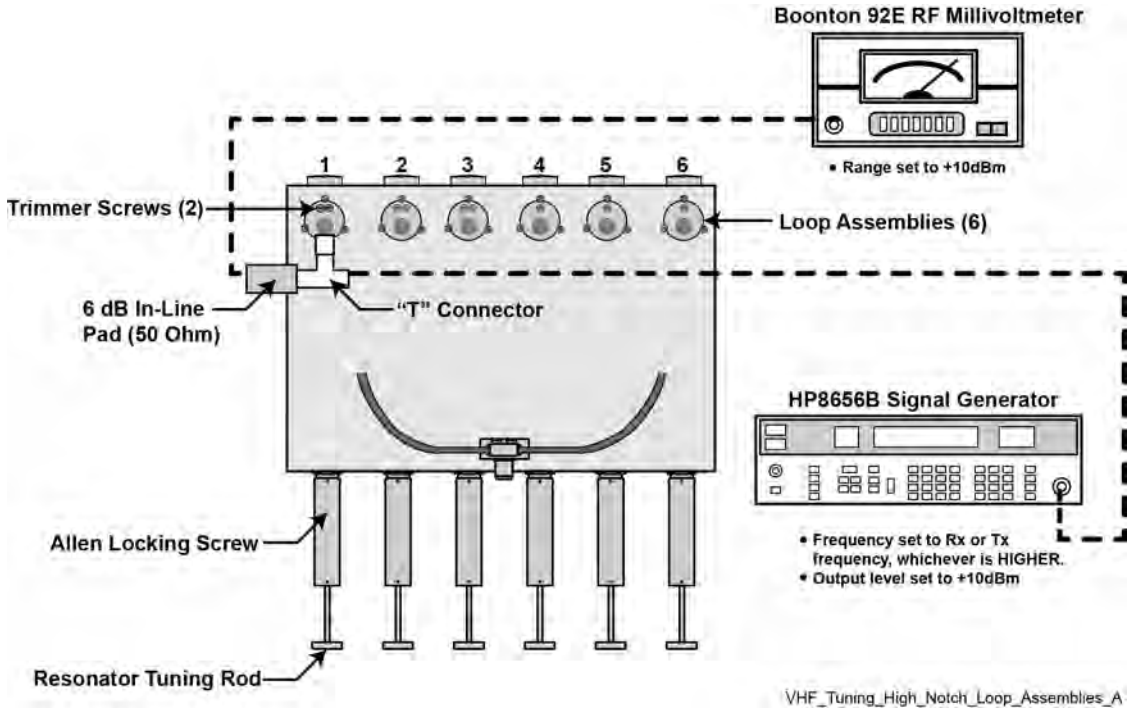

5.10.4.4.1
Tuning VHF Duplexer High Notch Loop Assemblies

Procedure:

1. Set up test equipment as shown in Figure 64: Test Equipment Set Up for Tuning VHF Duplexer High Notch Loop Assemblies on page 170.
2. Using the tuning tool, adjust trimmer screws for cavity # 1 to obtain **minimum** reading on millivoltmeter. (Adjust trimmer screws equally to obtain minimum. Reduce the range on the millivoltmeter as necessary to reach true minimum reading.)
3. Repeat steps 1 and 2 for cavities 2 and 3.

5.10.4.5

VHF Duplexer Low Notch Loop Assemblies Tuning Set Up

Figure 65: Test Equipment Set Up for Tuning VHF Duplexer Low Notch Loop Assemblies

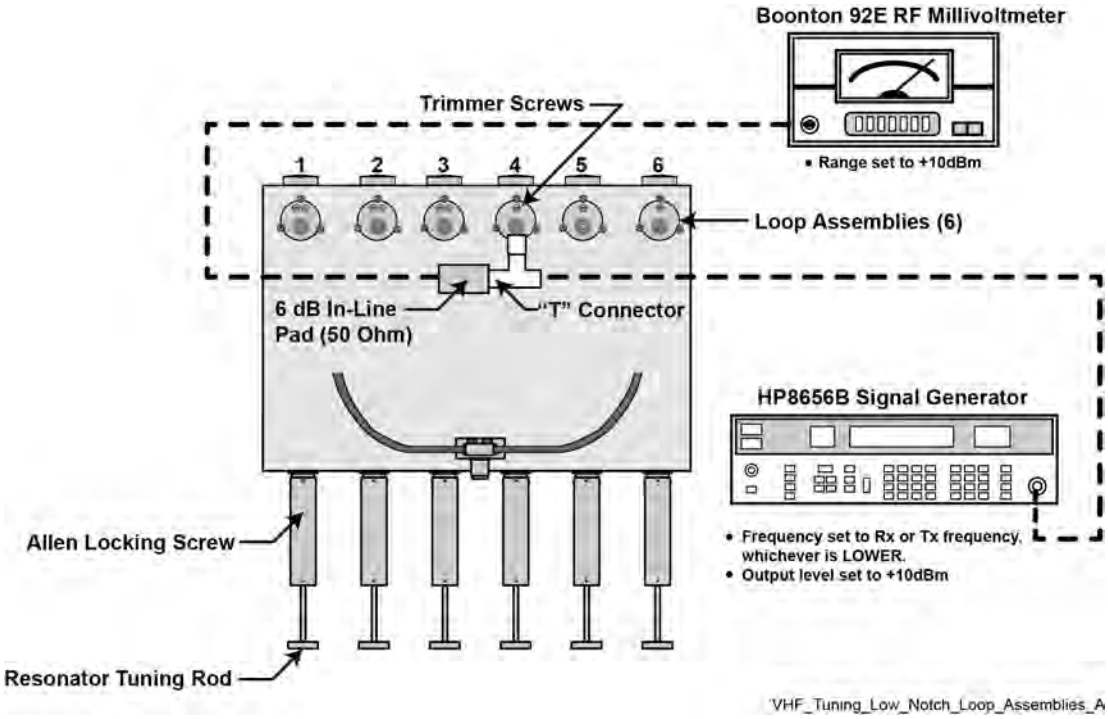

5.10.4.5.1

Tuning VHF Duplexer Low Notch Loop Assemblies

Procedure:

1. Set up test equipment as shown in Figure 65: Test Equipment Set Up for Tuning VHF Duplexer Low Notch Loop Assemblies on page 171.
2. Using the tuning tool, adjust trimmer screws for cavity # 4 to obtain **minimum** reading on millivoltmeter. (Adjust trimmer screw to obtain minimum. Reduce the range on the millivoltmeter as necessary to reach true minimum reading.)
3. Repeat steps 1 and 2 for cavities 5 and 6.

5.10.4.6
VHF Duplexer Insertion Loss Verification Set Up

Figure 66: Verifying VHF Duplexer Insertion Loss — Connecting Test Equipment

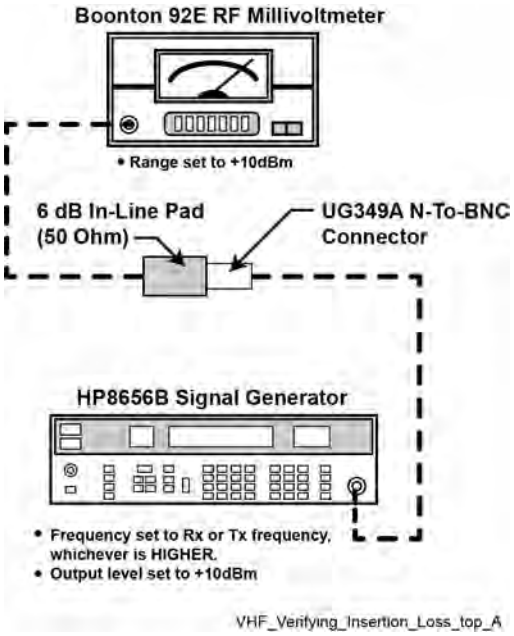

Figure 67: Verifying VHF Duplexer Insertion Loss — Connecting Duplexer Cable Assembly

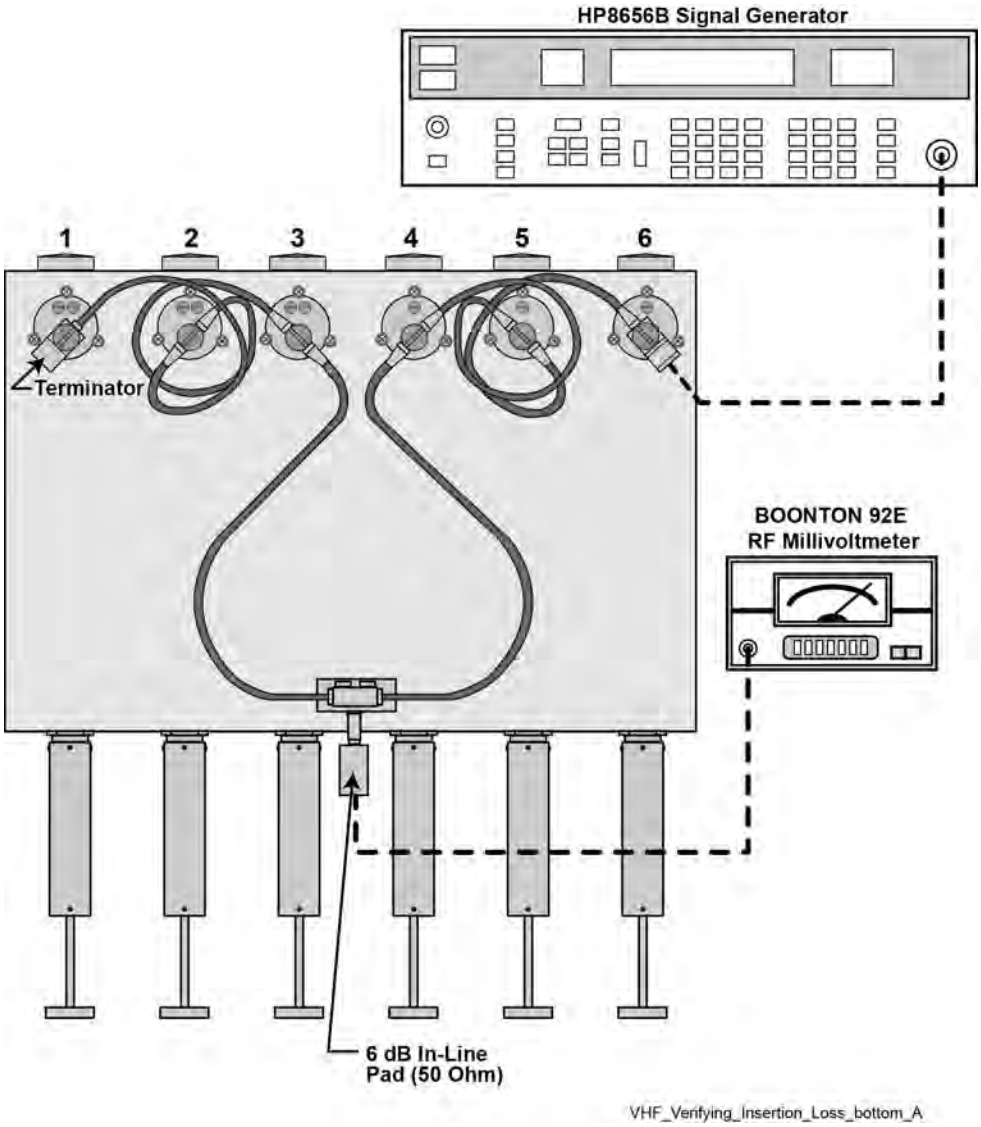

5.10.4.6.1

Verifying VHF Duplexer Insertion Loss

Procedure:

1. Connect test equipment as shown in Figure 66: Verifying VHF Duplexer Insertion Loss — Connecting Test Equipment on page 172.
2. Observe and note the level in dBm as shown on the millivoltmeter.
3. Connect the duplexer cable assembly and test equipment to the duplexer as shown in Figure 67: Verifying VHF Duplexer Insertion Loss — Connecting Duplexer Cable Assembly on page 173.
4. Observe and note the level in dBm as shown on the millivoltmeter.
5. Subtract the absolute number noted in step 2 from the number noted in step 4. The difference should be less than 1.3 dB to meet specification for insertion loss.
6. Repeat steps 1 through 5 for Low-Pass/High-Notch cavities with the following exceptions:
   a. Set the service monitor to Rx or Tx frequency, whichever is lower.

b Connect service monitor to Low Pass duplexer input (cavity # 1).

c Connect terminator to cavity #6.

5.10.4.7

VHF Duplexer Isolation Verification Set Up

Figure 68: Verifying VHF Duplexer Isolation — Connecting Test Equipment

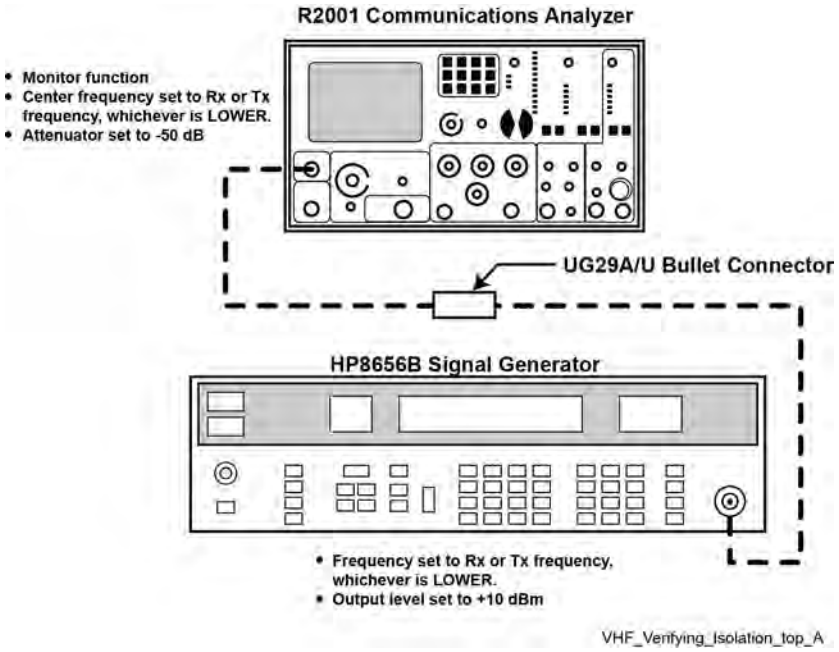

Figure 69: Verifying VHF Duplexer Isolation — Connecting Duplexer Cable Assembly

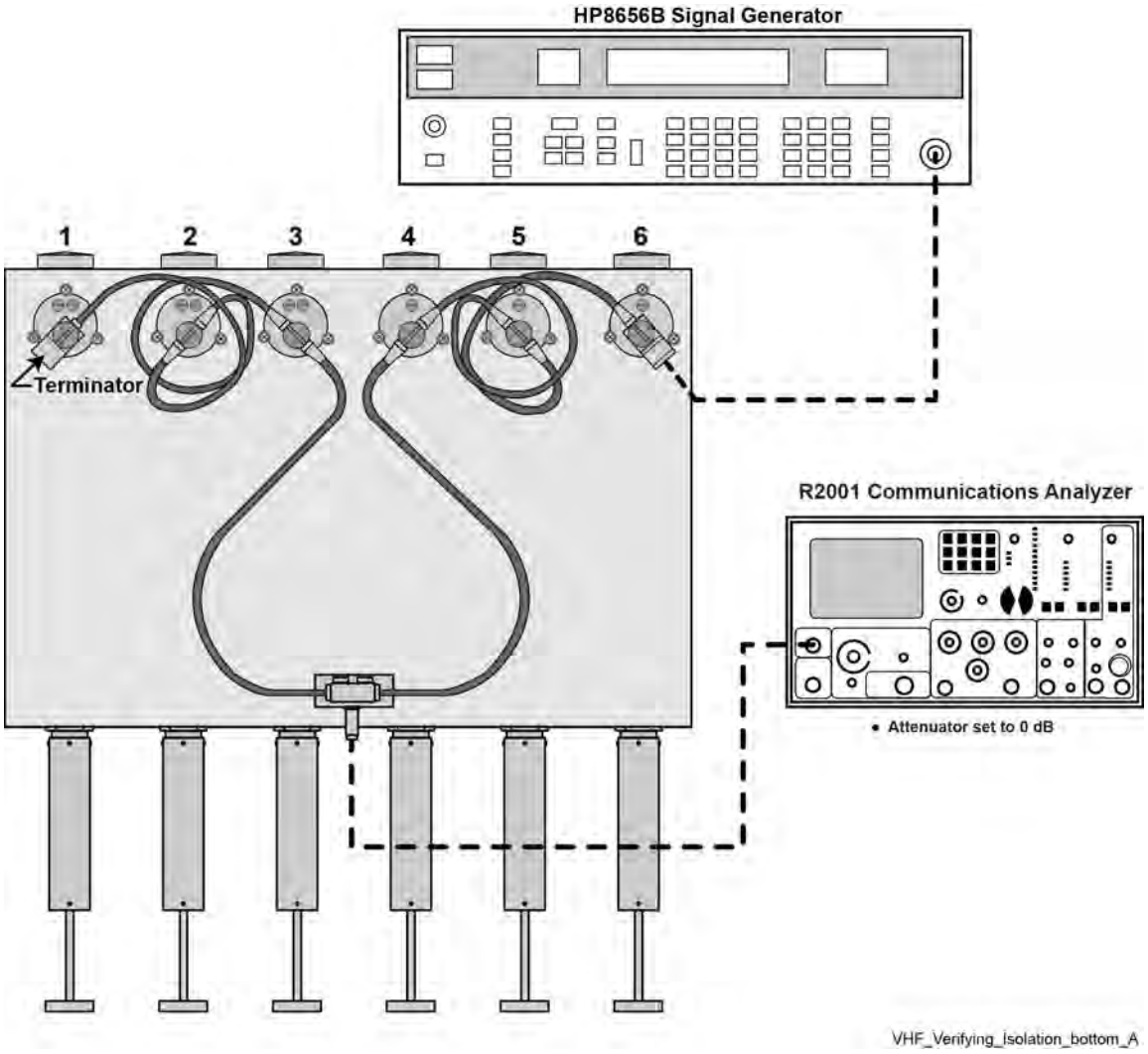

5.10.4.7.1

Verifying VHF Duplexer Isolation

Procedure:

1. Connect test equipment as shown in Figure 68: Verifying VHF Duplexer Isolation — Connecting Test Equipment on page 174.
2. Observe and note the level in dBm as shown on the service monitor.
3. Connect the test equipment to the duplexer as shown in Figure 69: Verifying VHF Duplexer Isolation — Connecting Duplexer Cable Assembly on page 175.
4. Observe and note the level in dBm as shown on the service monitor. (If no number is displayed, consider isolation to be greater than 105 dB, which exceeds the specification.)
5. Subtract the absolute number noted in step 4 from the number noted in step 2. The difference should be less than 75 dB to meet specification for isolation.
6. Repeat steps 1 through 5 for Low-Pass/High-Notch cavities with the following exceptions:
   - **a** Set service monitor for Rx or Tx frequency, whichever is higher.
   - **b** Connect service monitor to Low Pass duplexer input (cavity #1).

c Connect terminator to cavity #6.

5.10.4.8
Checking VHF Duplexer After Tuning

Procedure:

1. Ensure all locking screws are tight.
2. Ensure dust covers on all trimmer capacitors are installed.
3. Ensure all tuning rod locking screws (6) are tight.

5.10.5
Tuning a UHF Duplexer

The following procedures are most easily performed with the duplexer module removed from the rack or cabinet. Be sure to note the transmit and receive frequencies for the particular base radio before beginning.

If the duplexer module is tuned according to instructions and does not meet specifications for return loss, insertion loss, and/or isolation, the duplexer must be returned to the Motorola Solutions Support Center (SSC) for repair.

5.10.5.1
UHF Duplexer Tuning Set Up

Figure 70: UHF Duplexer Tuning Setup

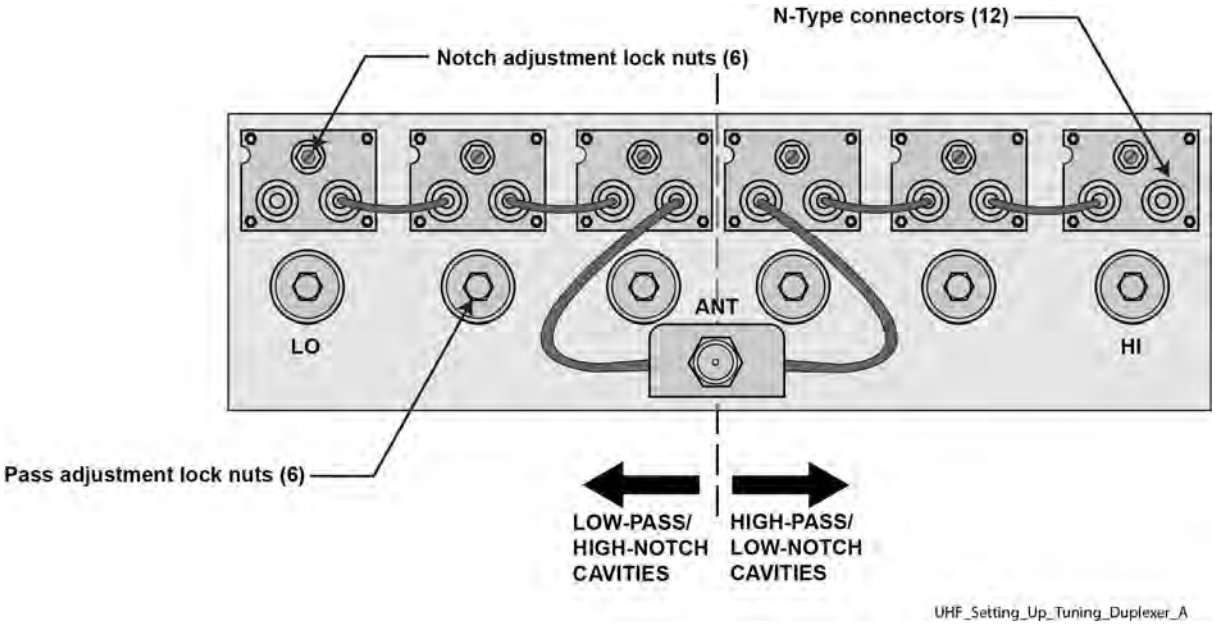

5.10.5.1.1
Setting Up for UHF Duplexer Tuning

Procedure:

1. Disconnect N-type connectors (12) and remove cables (6) from cavities. See Figure 70: UHF Duplexer Tuning Setup on page 176.
2. For each cavity (6), using an open-end wrench, loosen locknuts (2 per cavity).

5.10.5.2

UHF Duplexer Low Pass Resonators Tuning Set Up

Figure 71: Test Equipment Set Up for Tuning UHF Duplexer Low Pass Resonator

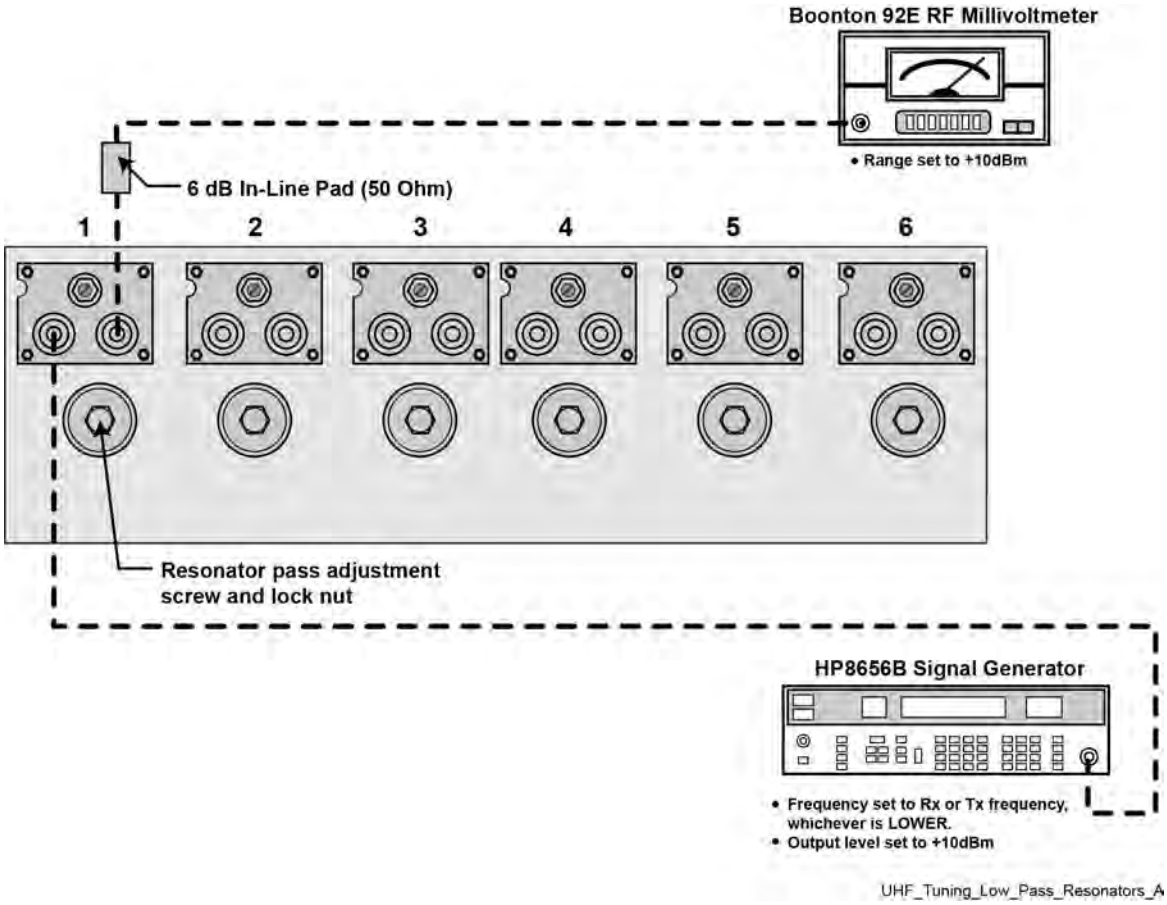

5.10.5.2.1

Tuning UHF Duplexer Low Pass Resonators

Procedure:

1. Set up test equipment as shown in Figure 71: Test Equipment Set Up for Tuning UHF Duplexer Low Pass Resonator on page 177.
2. Using a nut driver, adjust the pass adjustment screw for cavity # 1 to obtain a `PEAK` reading on the millivoltmeter.
3. Using an open-end wrench, carefully tighten the lock nut ensuring the pass adjustment screw does not shift position.
4. Repeat steps 2 and 3 for cavities 2 and 3.

5.10.5.3
UHF Duplexer High Pass Resonators Tuning Set Up

Figure 72: Test Equipment Set Up for Tuning UHF Duplexer High Pass Resonator

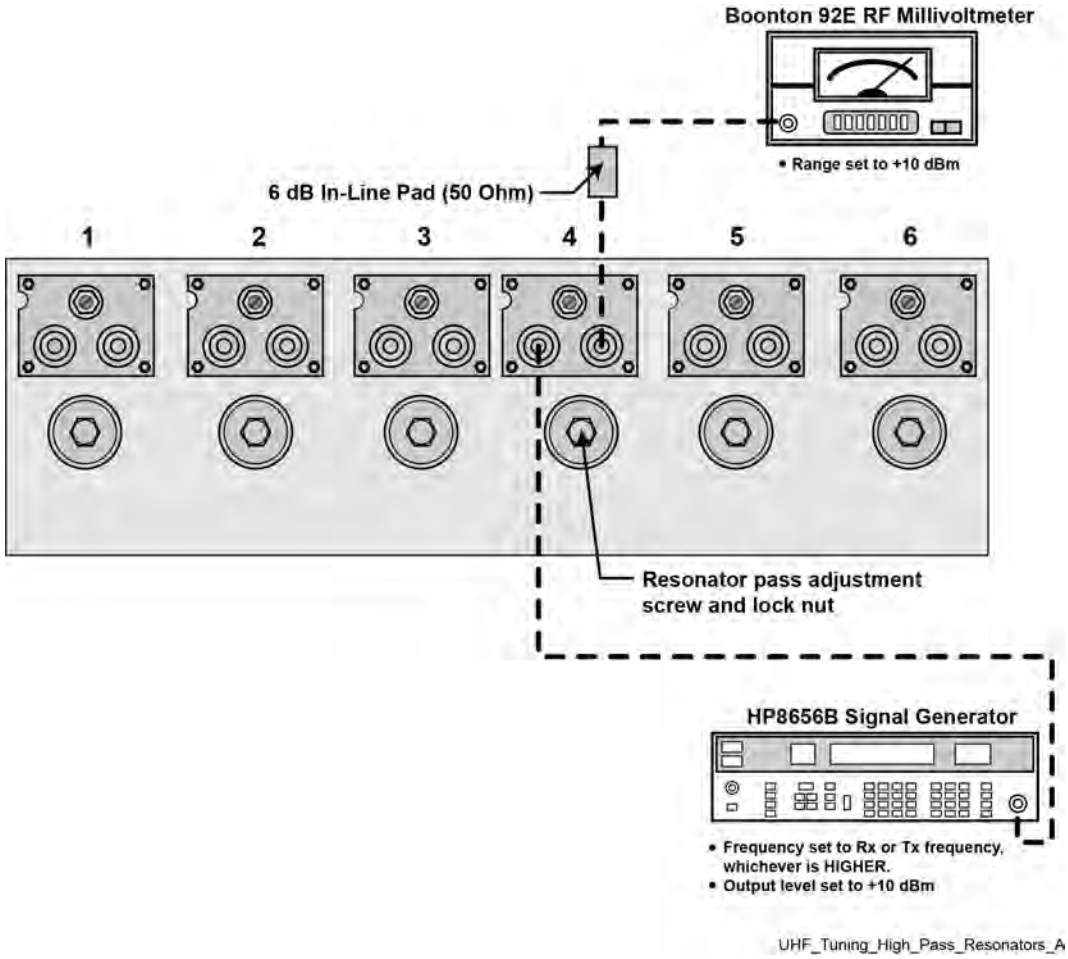

5.10.5.3.1
Tuning UHF Duplexer High Pass Resonators

Procedure:

1. Set up test equipment as shown in Figure 72: Test Equipment Set Up for Tuning UHF Duplexer High Pass Resonator on page 178.
2. Using a nut driver, adjust the pass adjustment screw for cavity #4 to obtain a **PEAK** reading on the millivoltmeter.
3. Using an open-end wrench, carefully tighten the lock nut ensuring the pass adjustment screw does not shift position.
4. Repeat steps 2 and 3 for cavities 5 and 6.

5.10.5.4

UHF Duplexer High Notch Loop Assemblies Tuning Set Up

Figure 73: Test Equipment Set Up for Tuning UHF Duplexer High Notch Loop Assemblies

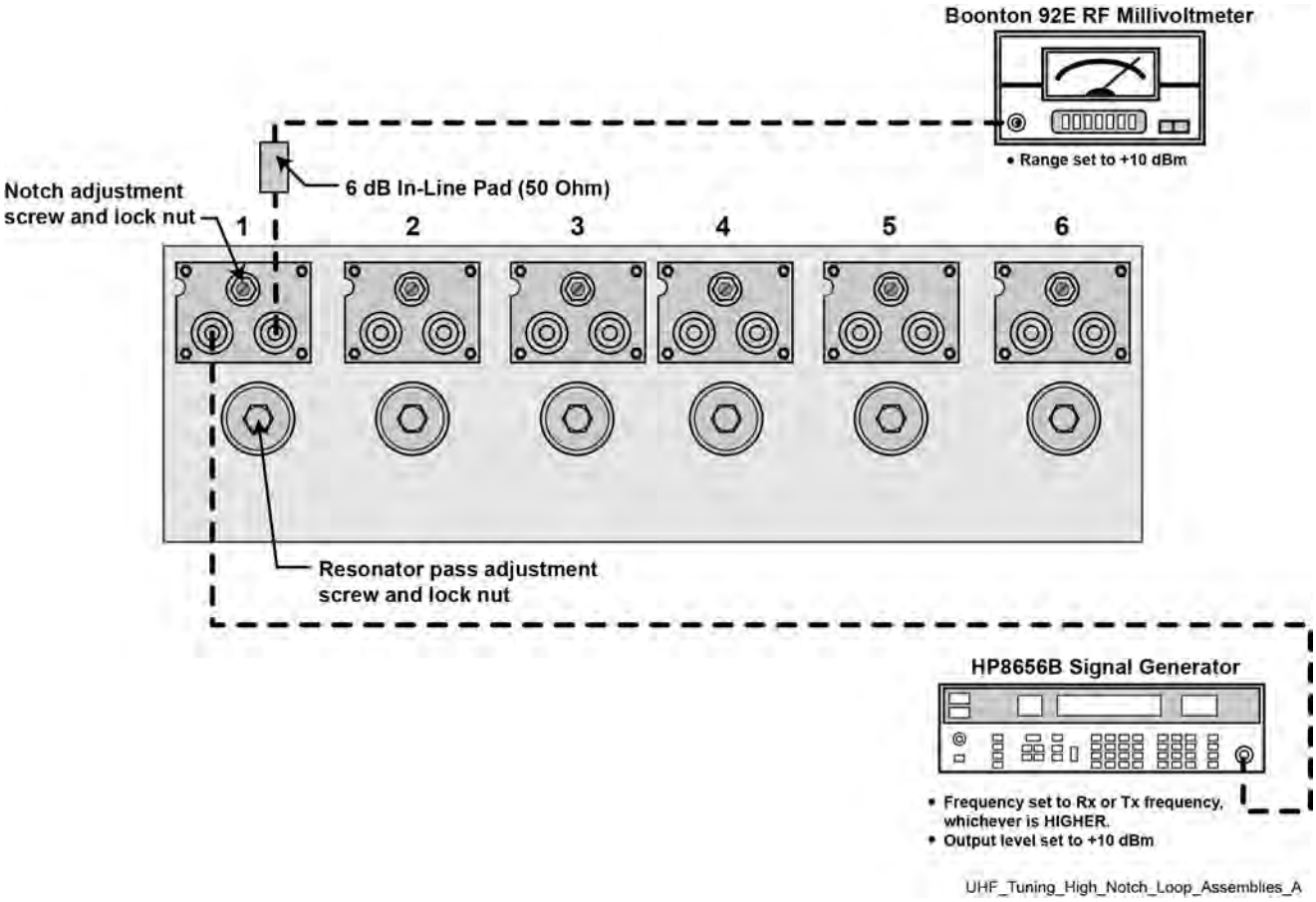

5.10.5.4.1

Tuning UHF Duplexer High Notch Loop Assemblies

Procedure:

1. Set up test equipment as shown in Figure 73: Test Equipment Set Up for Tuning UHF Duplexer High Notch Loop Assemblies on page 179.
2. Using a screwdriver, adjust the notch adjustment screw for cavity # 1 to obtain a minimum reading on the millivoltmeter. (Reduce the range on the millivoltmeter as necessary to reach true minimum reading.)
3. Using an open-end wrench, carefully tighten the lock nut ensuring the notch adjustment screw does not shift position.
4. Repeat steps 2 and 3 for cavities 2 and 3.

5.10.5.5
UHF Duplexer Low Notch Loop Assemblies Tuning Set Up

Figure 74: Test Equipment Set Up for Tuning UHF Duplexer Low Notch Loop Assemblies

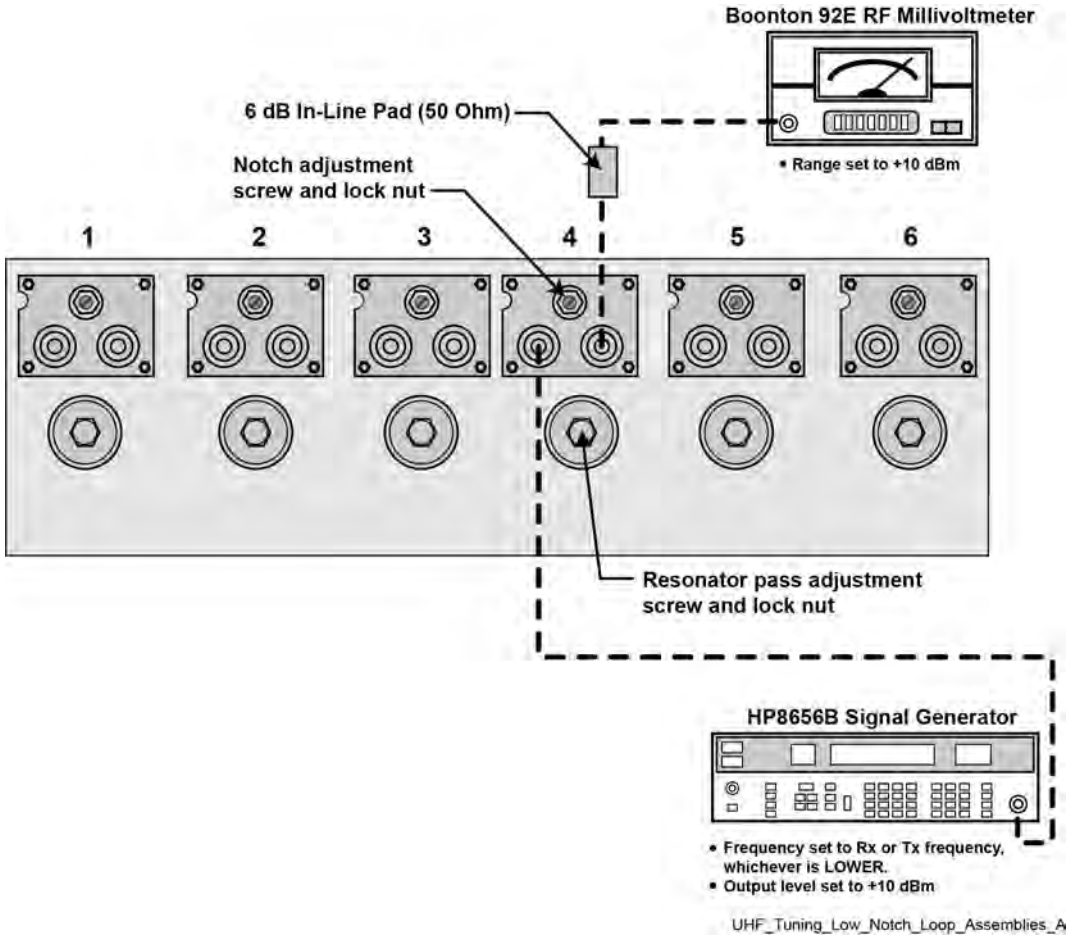

5.10.5.5.1
Tuning UHF Duplexer Low Notch Loop Assemblies

Procedure:

1. Set up test equipment as shown in Figure 74: Test Equipment Set Up for Tuning UHF Duplexer Low Notch Loop Assemblies on page 180.
2. Using a screwdriver, adjust the notch adjustment screw for cavity #4 to obtain a minimum reading on the millivoltmeter. (Reduce the range on the millivoltmeter as necessary to reach true minimum reading.)
3. Using an open-end wrench, carefully tighten the lock nut ensuring the notch adjustment screw does not shift position.
4. Repeat steps 2 and 3 for cavities 5 and 6.

5.10.5.6

UHF Duplexer Insertion Loss Verification Set Up

Figure 75: Verifying UHF Duplexer Insertion Loss — Connecting Test Equipment

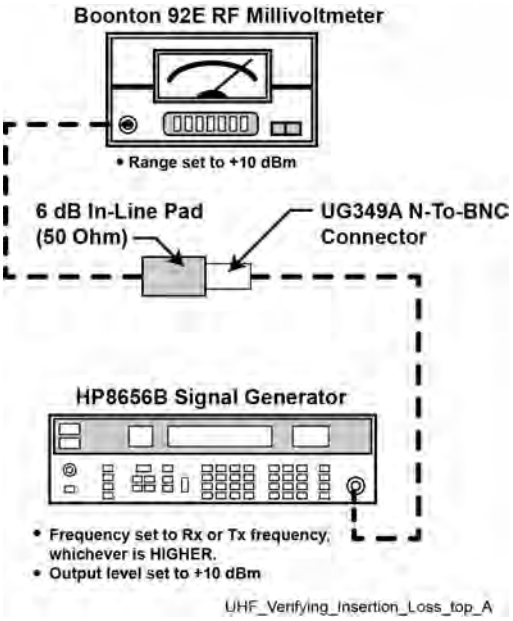

Figure 76: Verify UHF Duplexer Insertion Loss — Connecting Duplexer Cable Assembly

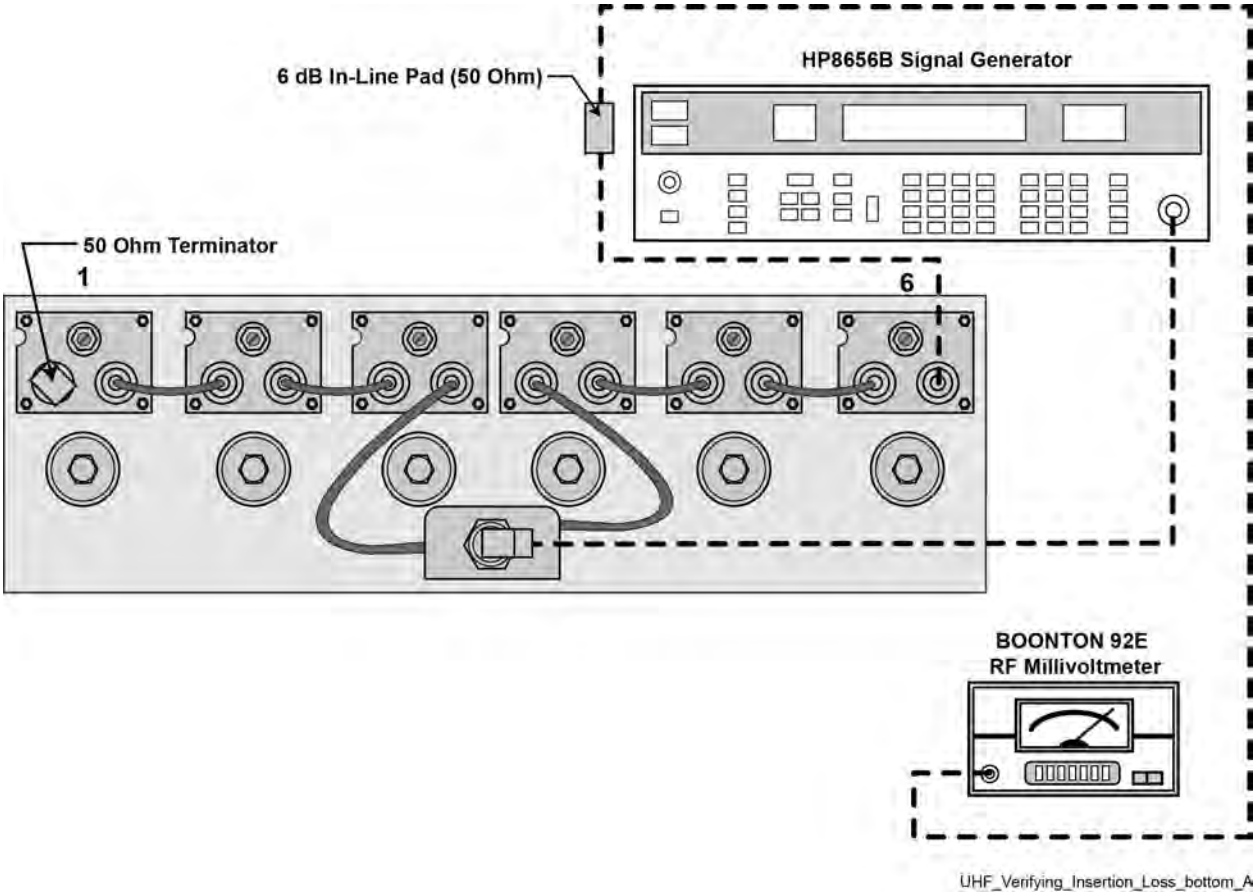

5.10.5.6.1
Verifying UHF Duplexer Insertion Loss

Procedure:

1. Connect test equipment as shown in Figure 75: Verifying UHF Duplexer Insertion Loss — Connecting Test Equipment on page 181.
2. Observe and note the level in dBm as shown on the millivoltmeter.
3. Connect the duplexer cable assembly and test equipment to the duplexer as shown in Figure 76: Verify UHF Duplexer Insertion Loss — Connecting Duplexer Cable Assembly on page 181.
4. Observe and note the level in dBm as shown on the millivoltmeter.
5. Subtract the absolute number noted in step 2 from the number noted in step 4. The difference should be less than 1.3 dB to meet specification for Insertion Loss.
6. Repeat steps 1 through 5 for Low-Pass/High-Notch cavities with the following exceptions:
   - **a** Set service monitor to Rx or Tx frequency, whichever is lower.
   - **b** Connect millivoltmeter to Low Pass duplexer input (cavity #1).
   - **c** Connect terminator to cavity #6.

5.10.5.7
UHF Duplexer Isolation Verification Set Up

Figure 77: Verifying UHF Duplexer Isolation — Connecting Test Equipment

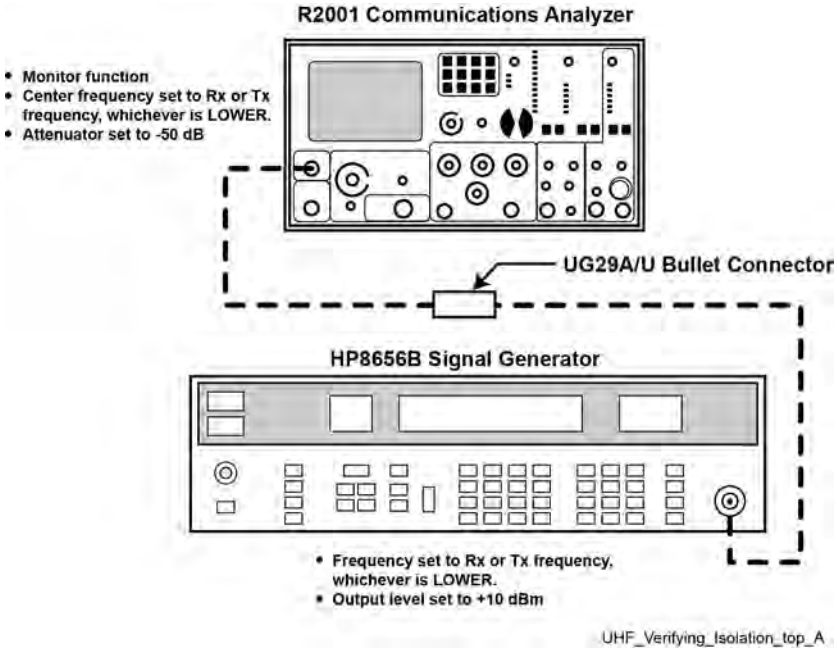

Figure 78: Verifying UHF Duplexer Isolation — Connecting Duplexer Cable Assembly

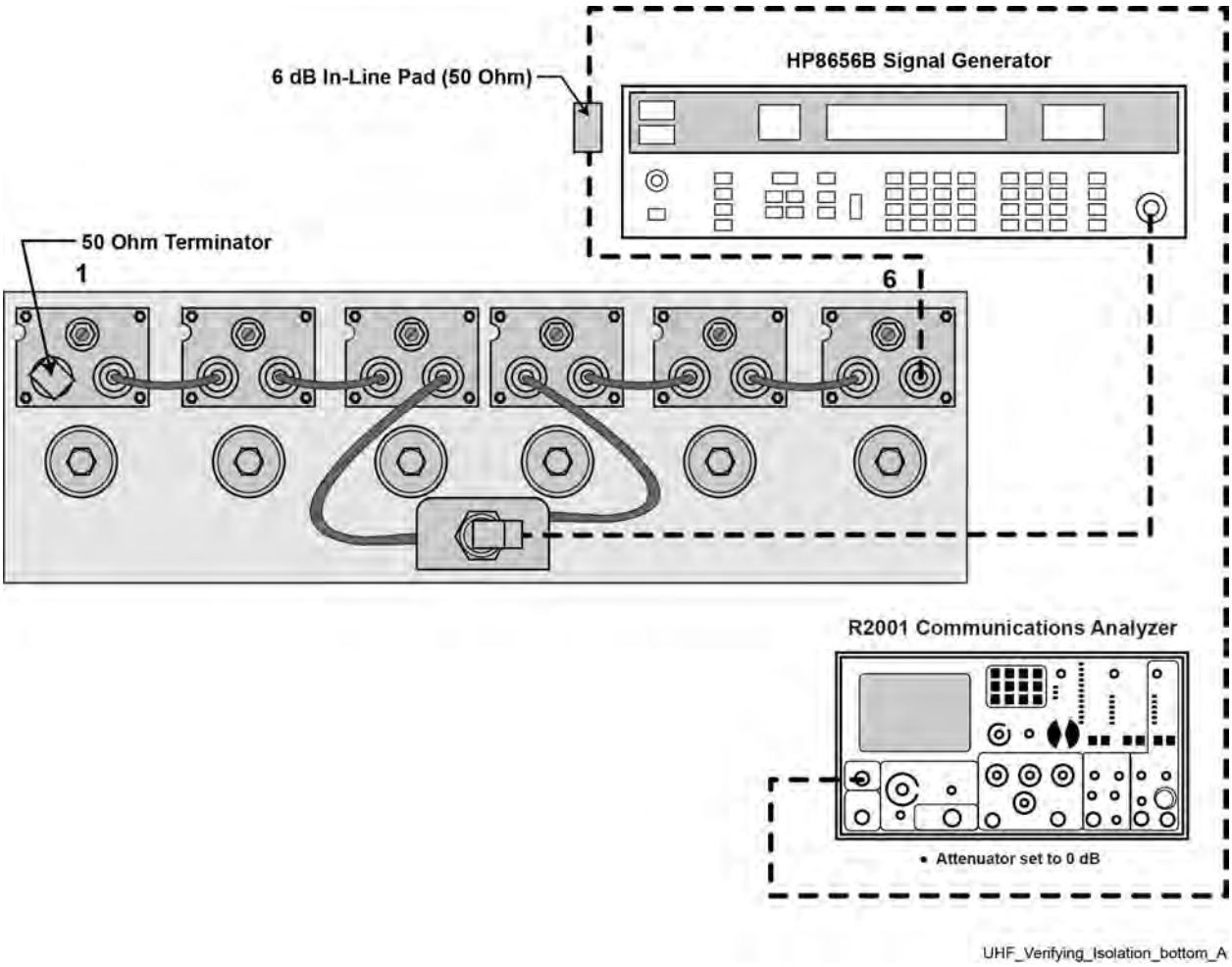

5.10.5.7.1

Verifying UHF Duplexer Isolation

Procedure:

1. Connect test equipment as shown in Figure 77: Verifying UHF Duplexer Isolation — Connecting Test Equipment on page 182.
2. Observe and note the level in dBm as shown on the service monitor.
3. Connect the test equipment to the duplexer as shown in Figure 78: Verifying UHF Duplexer Isolation — Connecting Duplexer Cable Assembly on page 183.
4. Observe and note the level in dBm as shown on the service monitor. (If no number is displayed, consider isolation to be greater than 105 dB, which exceeds the specification.)
5. Subtract the absolute number noted in step 4 from the number noted in step 2. The difference should be higher than 100 dB to meet specification for isolation.
6. Repeat steps 1 through 5 for Low-Pass/High-Notch cavities with the following exceptions:
   - **a** Set service monitor for Rx or Tx frequency, whichever is higher.
   - **b** Connect service monitor to Low Pass duplexer input (cavity #1).
   - **c** Connect terminator to cavity #6.

5.10.5.8
Checking UHF Duplexer After Tuning

Procedure:

1. Ensure all notch adjustment lock nuts (6) are tight.
2. Ensure all pass adjustment lock nuts (6) are tight.

5.11
Testing the GTR 8000 Base Radio Performance with a Service Monitor for Integrated Voice and Data

The service monitor is used to test and measure the transmitter and receiver characteristics of the base radio. The Service Monitor may be connected to a base radio to perform tests and measurements designed to determine whether the equipment is operating within specifications.

The sections that follow contain procedures performed when you first set up your system, and can be scheduled on a regular basis as part of the maintenance policies of your organization. Topics covered include:

- Deviation Standards (Digital Operation) on page 184
- Monitoring the Power Supply Module on page 185
- Verifying Receiver Performance for FDMA Operation on page 185
- Verifying Receiver Performance (Analog Operation) on page 190
- Checking Receiver Sensitivity (Self-Test Method) (IV and D) on page 192
- Monitoring the Transmitter Metering Points on page 193
- Verifying Transmitter Performance (Digital Operation) on page 193
- Verifying Transmitter Performance (Analog Operation) on page 195

5.11.1
Deviation Standards (Digital Operation)

NOTICE: These specifications allow a tolerance of ±10%. However, because the accuracy of the service monitor is only ±5%, the allowable tolerance in the measured deviation is ±5% and not ±10%.

Table 47: Deviation Standards for ASTRO 25 System Test Patterns

Signal	Minimum Deviation	Nominal Deviation	Maximum Deviation
low signal deviation	0.84 kHz	0.93 kHz	1.02 kHz
sow signal wide pulse deviation	undetermined	1.00 kHz	undetermined
standard deviation	2.55 kHz	2.83 kHz	3.11 kHz
standard wide pulse deviation	undetermined	3.00 kHz	undetermined
V.52 deviation	2.91 kHz	3.23 kHz	3.55 kHz
V.52 wide pulse deviation	undetermined	3.00 kHz	undetermined
C4FM deviation	2.91 kHz	3.23 kHz	3.55 kHz
C4FM wide pulse deviation	undetermined	3.00 kHz	undetermined

Signal	Minimum Deviation	Nominal Deviation	Maximum Deviation
GNSS test pattern - simulcast	undetermined	3.00 kHz	undetermined
ASTRO® 25 system voice	3.24 kHz	3.60 kHz	3.96 kHz
ASTRO® 25 system wide pulse	undetermined	3.00 kHz	undetermined

5.11.2

Monitoring the Power Supply Module

Perform the following procedure to monitor the power supply.

Procedure:

1. Connect to the base radio in Configuration/Service Software (CSS) through an Ethernet connection. See Connecting Through an Ethernet Port Link on page 140.
2. From the menu, select **Service** → **Metering Screens**.

   The **Metering Screen** window opens on the **Power Supply** tab.

   Figure 79: Metering Screen Window

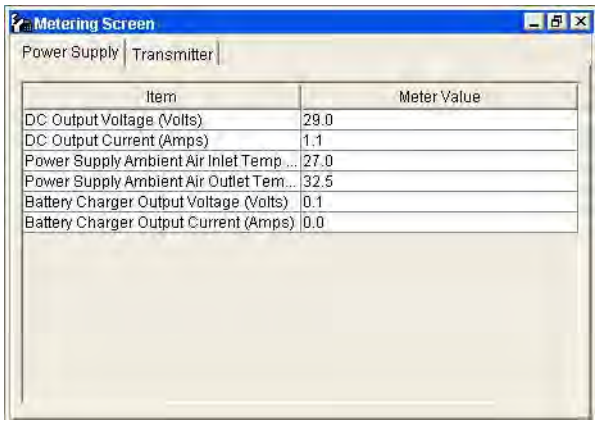

5.11.3

Verifying Receiver Performance for FDMA Operation

When and where to use:
Use this procedure to verify receiver performance by measuring the Bit Error Rate (BER) and Received Signal Strength Indication (RSSI) for digital operation.

Procedure:

1. Make the following connections to the base radio:
   - **a** Disconnect the BNC antenna cable (or N connector if preselector is present) from the receive antenna Port.
   - **b** Connect the service monitor GEN port to the base radio Antenna Port.
2. Set up the service monitor:
   - **a** Set modulation to Project 25 (C4FM) with a Standard 1011 test pattern.
   - **b** Set the service analyzer to generate at the receive frequency.
   - **c** Set the RF level an initial value of -47 dBm.

3 Connect to the transceiver module in Configuration/Service Software (CSS) through an Ethernet connection. See Connecting Through an Ethernet Port Link on page 140.

4 From the menu, select **Service** → **Test And Measurement Screen**.

5 Select the **ASTRO BER RSSI Report** tab.

6 If the base radio is not in service mode perform the following, otherwise go to step 7

   a Click **Change to Service Mode**.

   b At the confirmation screen, click **OK**.

   The base radio halts activity in the current mode and switches operation to the requested mode.

   c Re-open the **Test And Measurement Screen** as described in step 4.

7 Set up the test in CSS:

   a In the **Pattern Type** field, select **1011 Hz (FDMA)**.

   b In the **Sampling Period (sec)** list box, enter the number of required seconds.

   The time specifies the window over which the BER is calculated.

   c For BER measurement, in the **Rx Branch for BER Test** field, select the receive branch.

   The available selections for **Rx Branch for BER Test** are dependent on the set **Pattern Type**.

8 Measure the BER and RSSI:

   a Click **Start BER Measurement** or **Start RSSI Measurement**.

   The **Test And Measurement Screen** dialog box displays the following results:

   - BER results in percentage
   - RSSI results expressed in dBm.

   NOTICE: With the initial setting of the service monitor set for a carrier level of -47 dBm, you should expect a BER of 0.0 % and an RSSI level between -49 dBm and -45 dBm. Compensate for the loss of the cable connecting the service monitor to the base radio.

   NOTICE: If the receiver is inhibited, RSSI displays a meaningless value.

   b To create a log file for the BER and RSSI measurement, click **Start Log**.

   The **Log Save As** window appears.

   c Change the RF level and read the BER and RSSI again at the level appropriate for the base radio. The value should be less than 5%. See GTR 8000 Base Radio Specifications on page 40 for the appropriate value.

   d Key the transmitter in the base radio and readjust the generator output level until 5% BER is indicated on the service monitor. Record this level.

   Less than 1 dB of degradation should occur due to the transmitters being keyed.

   e Dekey the transmitter.

   f Click **Stop BER Measurement** or **Stop RSSI Measurement** to stop the test.

9 If Rx B is used as a backup and the site is not TDMA:

   a Disconnect the test cable from the generator to Rx A at the base radio and connect it to Rx B.

b Increase the generate level to -47 dBm.

c Wait for Branch A to fail. Alarms may be generated during testing.

1 This can take up to two (2) minutes.

2 CSS Channel tab **Time to Failure (sec)** field controls the time to fail.

d Repeat step 8.

10 If no further testing is needed, place the base radio into Normal Mode, as follows:

a Click **Change to Normal Mode**.

b At the confirmation screen, click **OK**.

The base radio halts activity in the current mode and switches operation to the requested mode.

11 Remove and restore the following connections to the base radio:

a Remove the service monitor GEN port connection from the base radio Antenna Port.

b Restore the antenna connection to the Receive Antenna Port.

5.11.4
Verifying Receiver Performance in TTA Operation

This procedure explains how to verify receiver performance in a system where a Tower Top Amplifier (TTA) is present.

Consult with any documentation that is specific to your system for the value of TTA Reserve Gain. If no information is available, use the following guidelines:

- For most situations, the TTA Reserve Gain should be in the 5 dB to 10 dB range.
- In the absence of guidance specific to your system, 7.5 dB is a useable value for TTA Reserve Gain.

NOTICE: This procedure for TTA testing is valid only for FDMA operation. An entirely different procedure for TTA testing is required for TDMA operation. Contact your system administrator for guidance, then contact your Motorola Solutions representative for assistance.
The Receive path attenuators must be configured before performing this part of the procedure.
The Rx path to the Rx antenna on the tower must be complete.

When and where to use:
Use this procedure to verify receiver performance in a system where a Tower Top Amplifier (TTA) is present.

Procedure:

1 Perform test setup:

a Configure the analyzer to generate an STD1011 pattern.

b Connect the Analyzer Gen port (3900) or the RF Generator Out port (S412E) to the TTA Test Port using a TNC-m (3900) or N-m (S412E) to BNC-m test cable with known loss. Record the cable loss value on the T tab, Test Cable #4.

c Configure the TTA so that the Antenna port is terminated in a 50 Ω load. If the TTA controller has a time out feature for the termination, make sure you periodically reset the TTA termination as needed.

2 Connect to the transceiver module in Configuration/Service Software (CSS) through an Ethernet connection. See Connecting Through an Ethernet Port Link on page 140.

3 If the base radio is not in service mode perform the following, otherwise go to the next step.

a From the CSS menu, select **Service** → **Test And Measurement Screen**.

b Click **Change to Service Mode**.

c At the confirmation screen, click **OK**.

The base radio halts activity in the current mode and switches operation to the requested mode.

d Re-open the **Test And Measurement Screen**.

4 Initiate TTA testing:

a On the **Test And Measurement Screen**, select the **ASTRO BER RSSI Report** tab.

b In the **Pattern Type** field, select **Project 25**.

c In the **Sampling Period (sec)** list box, enter 1 for the required seconds.

d Set the Analyzer Generate Frequency equal to the Base Radio Rx Frequency.

5 Test the Rx Noise Level with the TTA terminated:

a Turn the analyzer generator OFF.

b In CSS, click **Start RSSI Measurement**.

c Record the RSSI Value in the RSSI Level Terminated field of the FDMA Chan sheet.

This Rx Noise Level is a relative value and used for future comparisons.

6 Test the Rx RSSI Test Port Reference Level with the TTA terminated:

a Turn the analyzer generator ON.

b Establish an Analyzer Generate RF Level that produces an RSSI Level of -90.0 dBm.

c Record the Analyzer Generate RF Level in the Gen Level Reference field of the FDMA Chan sheet.

The sheet calculates the Actual Reference Level.

d In CSS, click **Stop RSSI Measurement**.

The Actual Reference Level is a relative value used for future comparisons to assist in troubleshooting.

- This test establishes a known reference that is about 30 dB above the typical noise floor, which minimizes the contribution of noise to the measurement and is a better indicator of the gain through the receive system.
- Testing at the sensitivity level is a function of the carrier to noise ratio. Noise has a much bigger impact when testing at the sensitivity level.
- The goal of this test is to give you the information to determine if you have a gain issue or a noise issue when troubleshooting a receive problem.

7 Test the Rx Sensitivity with the TTA terminated:

a In CSS, click **Start BER Measurement**.

b Adjust the Analyzer Generate RF Level for a 5% ± 0.25% BER.

c Record the Analyzer Generate RF Level in the Gen Level Terminated field of the FDMA Chan sheet.

d In CSS, click **Stop BER Measurement**.

e Click **Start RSSI Measurement**.

f Record the RSSI (dBm) value in the RSSI Sensitivity field of the results sheet.

g Click **Stop RSSI Measurement**.

The Test Result Sheet calculates the Actual Sensitivity Term using Sensitivity Terminated – Test Cable Loss - TTA Test Port Cable Loss - TTA Test Port Coupling Loss. This result is the reference used to determine site degradation or de-sense in the following tests.

8 Test Rx De-sense for TTA Normal without other transmitters keyed. The degradation is < 2 dB @ 700/800/900 MHz, < 6 dB @ 450 MHz, or < 10 dB @ 150 MHz.

CAUTION: This test and the following Rx De-sense TTA Normal with Transmitters Keyed test cannot be performed accurately if the channel is in use within the coverage area of the site (for example, a legacy system waiting for cutover).

a Configure the TTA so that the antenna port is connected to the antenna (normal operation).

b In CSS, click **Start BER Measurement**.

c If needed, readjust the Analyzer Generate RF Level for 5% ± 0.25% BER. Watch the CSS BER for about 1 minute.

d Record the Analyzer Generate RF Level in the Gen Lvl Desense no Tx field of the result sheet. The difference between this generator RF level and the level recorded in the Rx Sensitivity with the TTA Terminated test is the site degradation/de-sense.

NOTICE: If the BER reading is not stable, there is an external interference or a variable noise floor. Make a note on the Test Result Sheet that Channel X BER went to Y% while performing this test.

The worksheet calculates the Degradation no Tx value. The degradation should be less than specified at the beginning of this step.

- If the degradation is higher than recommended, consult with your system administrator to determine what the impact could have on talk-in coverage.
- The Gen Lvl Desense no Tx level from this test becomes the benchmark for future PM checks.

9 Test Rx De-sense for TTA Normal with transmitters keyed. The degradation is < 2 dB @ 700/800/900 MHz, < 6 dB @ 450 MHz, or < 10 dB @ 150 MHz. This test is optional for 700/800/900 MHz.

CAUTION: This test cannot be performed if the RF channel under test OR any of the RF channels being keyed up are in use with an operating system in the same coverage area.

a Key up the transmitters at the site.

WARNING: Verify that you have removed the power sensor from the Tx path before keying up multiple transmitters.

b If needed, readjust the Analyzer Generate RF Level for 5% ± 0.25% BER.

c Record the Analyzer Generate RF Level in the Gen Lvl Desense w/Tx field of the FDMA Chan sheet.

d De-key the transmitters at the site.

e In CSS, click **Stop RSSI Measurement**.

The result sheet calculates the Degradation with Tx value. If the degradation is higher than recommended, consult with the System Engineer to determine what the impact could have on talk-in coverage.

10 Test the Rx Noise Level with the TTA normal. This test establishes the noise floor of the receive system:

a Turn the analyzer generator OFF.

b In CSS, click **Start RSSI Measurement**.

c Record the CSS RSSI Value in the RSSI Level Antenna field of the FDMA Chan sheet.

d Click **Stop RSSI Measurement**.

This Rx Noise Level is a relative value.

11 If no further testing is needed, place the base radio into Normal Mode, as follows:

a Click **Change to Normal Mode**.

b At the confirmation screen, click **OK**.

The base radio halts activity in the current mode and switches operation to the requested mode.

12 Disconnect the Analyzer from the TTA.

5.11.4.1
Effective Receiver Sensitivity

The result sheet calculates the Effective Sensitivity (ERS) as the maximum of Gen Lvl Desense no Tx or Gen Lvl Desense w/Tx, – Test Cable #4 loss - TTA Test Port Cable Loss - TTA Test Port Coupling Loss.

Be sure to discuss this actual value with your system administrator to verify that there are no impacts to the system talk-in coverage. Channel-to-channel variations should be within ±2 dB.

If this site is utilizing two Rx antennas in a fallback (not diversity) configuration, perform all the steps in Verifying Receiver Performance in TTA Operation on page 187 to verify that Rx B is functional. If using a second TTA, connect to the second TTA test port. Leave the 1st TTA test port disconnected. For a Dual Diversity TTA, disconnect the A side from the receive distribution system so that no signal is present at the Rx A connection on the rear of the GTR 8000 Base Radio or the junction panel of the GTR 8000 Expandable Site Subsystem. Fail Branch A by applying a high-level signal to Branch B and wait for Branch A to fail.

Create a second Chan Result sheet by copying the original and labeling it Chan x – x Fallback Rx. Ensure that the ERS for Rx B meets the coverage requirements too.

5.11.5
Verify Receiver Performance for APCO TDMA Operation

See chapter 5 in the *Dynamic Dual Mode for TDMA Operation Feature Guide* manual for TDMA testing using the Aeroflex service monitor.

To perform a self-test of the receiver's sensitivity, see Checking Receiver Sensitivity (Self-Test Method) (IV and D) on page 192.

5.11.6
Verifying Receiver Performance (Analog Operation)

When and where to use:
Use this procedure to verify receiver performance by measuring the receiver sensitivity (SINAD) for an analog base radio.

NOTICE: This procedure uses an internal SINAD in the base radio. If a field technician chooses to use a service monitor as an external SINAD meter, see “SINAD Measurement Procedure (measured by Service Monitor)” within **Base Radio Service Help** → **Service Screens** → **Alignment Screens** → **Carrier Squelch Alignment** tab in the *CSS Online Help*.

Procedure:

1. Connect to the transceiver module in Configuration/Service Software (CSS) through an Ethernet connection. See Connecting Through an Ethernet Port Link on page 140.
2. From the menu, select **Service** → **Alignment Screens**.
3. Optional: If the base radio is not already in Service Mode, place in Service Mode, as follows:
   - **a** Click **Change to Service Mode**.
   - **b** At the confirmation screen, click **OK**.

     The base radio halts activity in the current mode and switches operation to the requested mode.
   - **c** Re-open the **Alignment Screen** as described in step 2.
4. Select the **Carrier Squelch Alignment** tab.
5. Make the following connections to the base radio:
   - **a** Disconnect the BNC antenna cable or N connector if a preselector is present from the Receive Antenna Port.
   - **b** Connect the service monitor GEN port to the base radios Antenna Port with a BNC connector.
6. Set up the service monitor.
   - **a** For 25 kHz channels, set the modulation to 1 kHz tone at 3 kHz deviation.
   - **b** For 12.5 kHz channels, set the modulation to 1 kHz tone at 1.5 kHz deviation.
   - **c** Set the service monitor to generate at the receive frequency.
   - **d** Set the RF level an initial value of –80 dBm.
7. To measure 25 kHz channel SINAD, click **25 kHz**. To measure 12.5 kHz channel SINAD, click **12.5 kHz**.
8. Select the **SINAD measurement** box.
9. Click **Start SINAD Measurement**.

   The **SINAD Measurement Value** box displays wait, and after 10 seconds starts to display the SINAD results in dB.

   NOTICE: With the initial setting of the service monitor, set for a carrier level of –80 dBm, expect a SINAD of >26 dB. Compensate for the loss of the cable connecting the service monitor to the base radio. If the receiver is inhibited, SINAD displays a meaningless value.
10. Change the service monitor RF level and read the SINAD again until the value is 12 dB.

    NOTICE: When the SINAD value is close to 12 dB, wait 10 seconds after changing the RF signal generator level. The base radio needs 10 seconds to stabilize the SINAD measurement. Compensate for the loss of the cable connecting the service monitor to the base radio.
11. Record the signal generator RF level. Compare this value to the sensitivity specifications. See GTR 8000 Base Radio Specifications on page 40 for the appropriate value.

a Key the transmitter in the base radio and readjust the generator output level until 12 dB SINAD is indicated on the service monitor. Record this level.

Less than 1 dB of degradation should occur due to the transmitters being keyed.

b Dekey the transmitter.

12 Click **Stop SINAD measurement** to stop the measurement.

13 Unselect the **SINAD measurement** box.

14 If no further testing is needed, place the base radio in Normal Mode, as follows:

a Click **Change to Normal Mode**.

b At the confirmation screen, click **OK**.

The base radio halts activity in the current mode and switches operation to the requested mode.

15 Remove and restore the following connections to the base radio:

a Remove the service monitor GEN port connection from the base radio Antenna Port.

b Restore the antenna connection to the Receive Antenna Port.

5.11.7
Checking Receiver Sensitivity (Self-Test Method) (IV and D)

When and where to use:
Use this procedure to check the receiver sensitivity for the station without any test equipment. The receiver uses a factory calibrated low-level noise source at the receiver input to check performance. This procedure can be performed remotely.

Procedure:

1 Connect to the transceiver module in Configuration/Service Software (CSS) through an Ethernet connection. See Connecting Through an Ethernet Port Link on page 140.

2 From the menu, select **Service** → **Test And Measurement Screen**. Select the **ASTRO BER RSSI Report** tab.

3 If the base radio is not already in Service Mode perform the following substeps, otherwise go to step 4.

a Click **Change to Service Mode**.

b At the confirmation screen, click **OK**.

The base radio halts activity in the current mode and switches operation to the requested mode.

c Re-open the **Test And Measurement Screen** as described in step 2.

4 Click **Start Receiver Test**.

A confirmation dialog box appears indicating test progress. After a few seconds, the test concludes with a pass or fail message.

5 Click **OK**.

6 If no further testing is needed, place the base radio in Normal Mode, as follows:

a Click **Change to Normal Mode**.

b At the confirmation screen, click **OK**.

The base radio halts activity in the current mode and switches operation to the requested mode.

5.11.8
Monitoring the Transmitter Metering Points

Procedure:

1. Connect to the transceiver module in Configuration/Service Software (CSS) through an Ethernet connection. See Connecting Through an Ethernet Port Link on page 140.
2. From the menu, select **Service** → **Metering Screens**.

   The **Metering Screen** dialog box appears.
3. Select the **Transmitter** tab.
4. Click **Transmitter Test** to briefly key up the transmitter.

   The status bar on the window confirms if the transmitter is operating properly or if it has failed.
5. The **Current** column displays the values read for the following:

   NOTICE: When the base radio is transmitting, the **VSWR** field on the screen displays a value of 1 or greater; when the base radio is not keyed, 1 is displayed.

Item	Measure
Current Measured Forward Power (Watts)	Forward power of the base radio
Current Measured Reflected Power (Watts)	Reflected power of the base radio
Current Measured VSWR	Voltage Standing Wave Ratio (VSWR) of the base radio
The following readings are for a conventional base radio:	
Current Stored Forward Power (Watts)	Forward power of the base radio at the last key up
Current Stored Reflected Power (Watts)	Reflected power of the base radio at the last key up
Current Stored VSWR	VSWR of the base radio at the last key up

5.11.9
Verifying Transmitter Performance (Digital Operation)

When and where to use: Use this procedure to test the transmitter signaling patterns and verify that the base radio transmitter meets the ASTRO® 25 system standards by forcing the base radio to transmit a V.52 standard test pattern.

Procedure:

1. Connect to the transceiver module in Configuration/Service Software (CSS) through an Ethernet connection. See Connecting Through an Ethernet Port Link on page 140.
2. From the menu, select **Service** → **Test And Measurement Screen**. Select the **ASTRO Test Pattern** tab.

3 If the base radio is not already in Service Mode, place in Service Mode, as follows:

   a Click **Change to Service Mode**.

   b At the confirmation screen, click **OK**.

   The base radio halts activity in the current mode and switches operation to the requested mode.

   c Re-open the **Test And Measurement Screen**, as described in step 2.

4 Connect the service monitor to the base radio:

   a Remove the N-Type connector from the Transmitter Antenna Port.

   b Connect an N-to-N cable from the Transmitter Antenna Port to the T/R port of the service monitor

   c Make the following settings on the service analyzer:

   - Click **Receiver (TX Test)**.
   - Enter the frequency to match that of the base radio TX channel selected.
   - Click **INPUT PORT** and set to T/R.
   - Click **ATTEN** and set to 20 dB.
   - Click **DEMOD** and set to P25.
   - Click **IF BW** and set to 12.5 kHz
   - Click **RF GEN** to turn OFF the Signal Generator Output.

   d Click **Options**. Enable and make the following selections in the Spectrum Analyzer, EVM Data, Power Meter, and Modulation Plot, as follows:

   - Expand the **Power Meter** and set to **AR** (Autorange). If necessary, change to 0. Press RETURN. Verify that Cable Loss is 0. If cable loss is anticipated, expand the **Power Meter** and enter the cable loss factor.
   - Set the **RF Error Meters** to **AR** (Autorange).
   - Set the **Modulation Meter** to **AR** (Autorange).

5 Set up the test in CSS by selecting **V.52** in the **Pattern Type** field.

6 Click **Start Pattern Transmission**.

   The service monitor displays:

   - The test pattern on the modulation scope.
   - The amount of deviation of the carrier.
   - The modulation fidelity as a percentage.
   - The transmitters carrier frequency error.

Figure 80: Configuration for Modulation Fidelity Measurement (Aeroflex 2975 Series Service Monitor or Equivalent Analyzer)

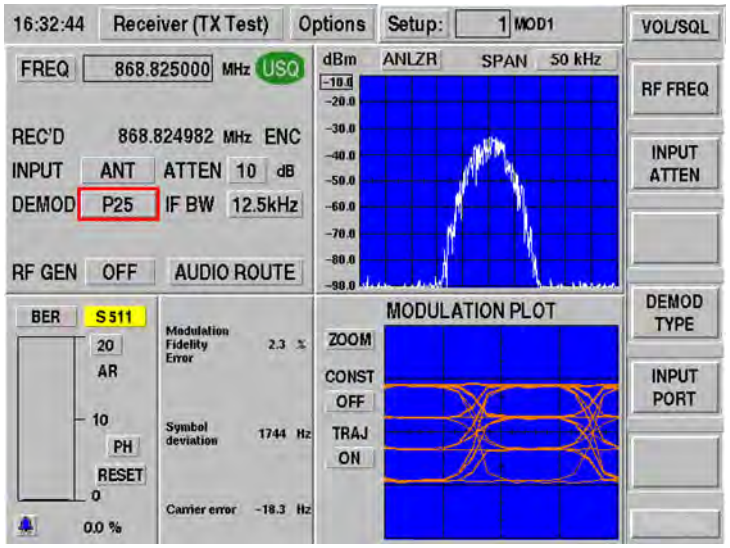

7 Record the Bit Error Rate (**BER**), **Modulation Fidelity Error**, **Symbol Deviation**, and **Carrier Error and FREQ** readings from the **P25 Uplink Data** (in the **Options** menu) for use in digital Receiver Testing.

8 Click **Stop Pattern Transmission** to turn off the test tone.

9 Disconnect the service monitor and reconnect the transmit antenna.

10 If no further testing is needed, place the base radio in Normal Mode, as follows:

   a Click **Change to Normal Mode**.

   b At the confirmation screen, click **OK**.

   The base radio halts activity in the current mode and switches operation to the requested mode.

5.11.10 Verifying Transmitter Performance (Analog Operation)

When and where to use:
To verify that the base radio transmitter meets the ASTRO® 25 system standards, the base radio must be forced to transmit a 1 kHz tone.

Procedure:

1 Connect to the transceiver module in Configuration/Service Software (CSS) through an Ethernet connection. See Connecting Through an Ethernet Port Link on page 140.

2 From the menu, select **Service** → **Test and Measurement Screen**.

   The **Test and Measurement Screen** appears.

3 Select the **ASTRO Test Pattern** tab.

4 If the base radio is not already in service mode perform the follows substeps, otherwise go to step 5.

   a Click **Change to Service Mode**.

b At the confirmation screen, click **OK**.

The base radio halts activity in the current mode and switches operation to the requested mode.

c Re-open the **Test And Measurement Screen**, as described in step 2

5 Connect the service monitor to the base radio:

a Remove the N-Type connector from the Transmitter Antenna Port.

b Connect an N-to-N cable from the Transmitter Antenna Port to the T/R port of the service monitor.

6 Make the following settings on the service analyzer:

a Configure the service monitor for **Analog Duplex**.

b Enter the frequency to match that of the base radio TX channel selected.

c Click **INPUT PORT** and set to T/R.

d Click **ATTEN** and set to 20 dB.

e Click **IF BW** and set to 12.5 kHz for narrow channels. Select 25 kHz or 30 kHz for wide channels.

f Click **DEMOD** and set to FM.

g Click **RF GEN** to turn OFF the Signal Generator Output.

h For the power meter, select **W** and **BB** (Broadband).

i Select **0.3–3 kHz** for the audio filtering bandwidth.

7 Set up the test in CSS:

- From the **Pattern to Transmit** field, select **1 kHz Tone at 60% deviation without PL/DPL**.

8 Click **Start Pattern Transmission**.

The service monitor displays:

- The transmit output power (make sure to account for any cable loss).
- The amount of FM deviation of the carrier.
- The Tx SINAD (measure of Tx distortion) in dB.
- The transmitters carrier frequency error.

Figure 81: Configuration for Modulation Fidelity Measurement (Aeroflex 2975 Series Service Monitor or Equivalent)

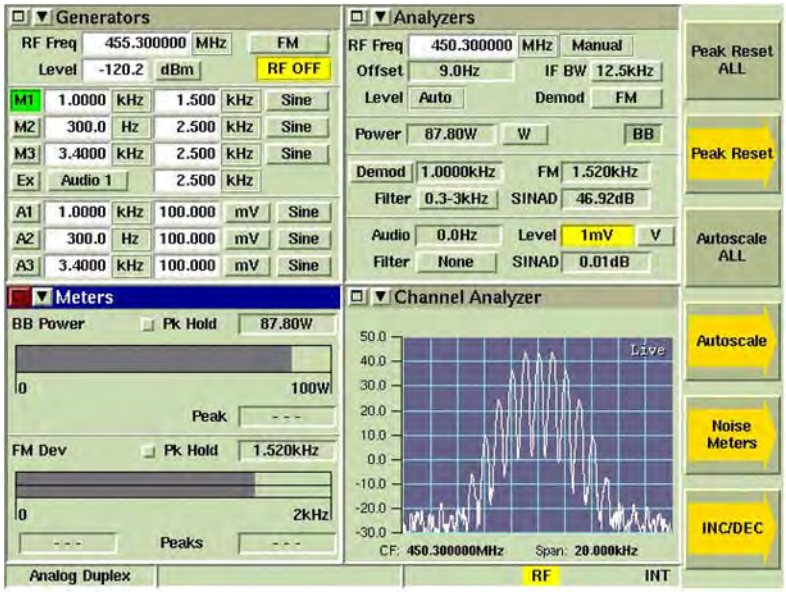

9 Click **Stop Pattern Transmission** to turn off the test tone.

10 Disconnect the service monitor and reconnect the transmit antenna.

11 If no further testing is needed, place the base radio in Normal Mode, as follows:

   a Click **Change to Normal Mode**.

   b At the confirmation screen, click **OK**.

   The base radio halts activity in the current mode and switches operation to the requested mode.

5.12 Testing the GTR 8000 Base Radio Performance with a Service Monitor for HPD

The High Performance Data (HPD) Service Monitor is a diagnostic tool that may be used with an HPD base radio or HPD modem to test and measure the transmitter and receiver characteristics. The HPD Service Monitor generates HPD signaling and provides diagnostic information for received signaling.

Figure 82: HPD Service Monitor Test Screen (Aeroflex 3900 Series Service Monitor)

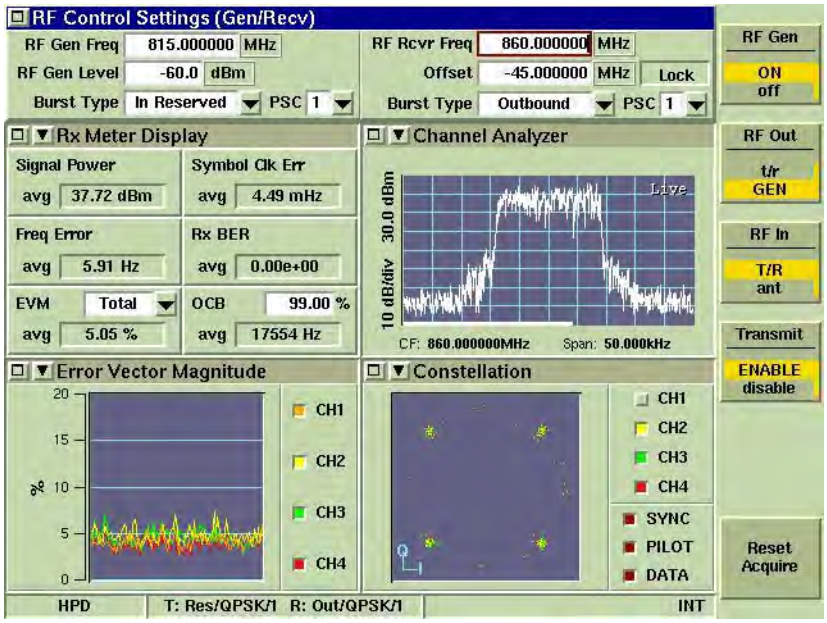

The HPD Service Monitor is connected with an HPD base radio to perform the following diagnostic tests (for additional tests, see the HPD service monitor manual). These tests determine whether the equipment is operating within specification. If the HPD base radio fails to meet specification, service may be required. Topics covered include:

- Measuring HPD Base Radio Tx Power, Frequency Accuracy, and Tx EVM on page 200.
- Measuring HPD Base Radio Rx Sensitivity and Rx BER on page 203.
- Checking Receiver Sensitivity (Self-test Method) (HPD) on page 206

For additional information about using the service monitor, see the *HPD Service Monitor* manual or online help (accessed through the **Help** button on the front of the service monitor).

5.12.1
Setting Up the HPD Service Monitor for Testing the Base Radio

Prerequisites: The test procedures require that the Rx and Tx cables of the base radio to be connected to the HPD Service Monitor. Any calls present on the channel associated with the base radio are dropped from that channel. The channel must be placed in Service Mode before performing the test procedures so that the system does not attribute the loss of channel to a failure.

Procedure:

1. Plug a power cable into the AC port at the rear of the High Performance Data (HPD) service monitor.
2. Connect a USB mouse to one of the two USB ports in the rear of the service monitor.

   NOTICE: The following procedures assume that a USB mouse is connected. If not, for instructions to click or select you can use the TAB key and arrow buttons on the front of the service monitor. For instructions to select a soft key on the right side of the screen, use the unlabeled buttons on the front of the service monitor, pressing the button located next to the soft key on the screen.
3. Configure the **Speed/Duplex** setting in the PCs Ethernet interface to 10 Mb Half Duplex.
4. Connect to the base radio in Configuration/Service Software (CSS) through an Ethernet connection. See Connecting Through an Ethernet Port Link on page 140.

5 From the menu, select **Service** → **Test And Measurement Screen**.

The **Test And Measurement Screen** dialog box appears.

6 If the base radio is not already in service mode, perform the follows substeps, otherwise go to step 7.

a Click **Change to Service Mode**.

b At the confirmation screen, click **OK**.

The base radio halts activity in the current mode and switches operation to the requested mode.

c Re-open the **Test And Measurement Screen**, as described in step 5.

7 If measuring the base radio transmit signal, connect the Tx connector at the rear of the base radio to the T/R (Transmit/Receive) port on the front of the service monitor. (Both are N-type RF connectors.)

8 If measuring the base radio receive signal, using a splitter, connect the RX-A and RX-B ports at the rear of the base radio to the GEN port on the front of the service monitor.

9 Press the green power button on the front of the service monitor.

10 If the **Test Screen** is not displayed (see Figure 82: HPD Service Monitor Test Screen (Aeroflex 3900 Series Service Monitor) on page 198), press the **Test** button on the front of the service monitor.

11 Locate the specifications for the GTR 8000 Base Radio configuration being tested. See GTR 8000 Base Radio Specifications on page 40.

12 If no further testing is needed, place the base radio in Normal Mode, as follows:

a Click **Change to Normal Mode**.

b At the confirmation screen, click **OK**.

The base radio halts activity in the current mode and switches operation to the requested mode.

5.12.2
Performing In-band Power Meter User Calibration

When and where to use:
The Aeroflex 3900 series High Performance Data (HPD) service monitor has two forms of power measurement:

- Broadband is similar to the working of an in-line wattmeter.
- In-band is performed after the RF signal is down converted to baseband by a Digital Signal Processor (DSP).

If the HPD service monitor runs continuously, it requires periodic calibration. Re-calibration is required only if the User Calibration Threshold is exceeded. The service monitor displays a flag at the bottom indicating to re-calibrate to maintain the accuracy indicated in the User Calibration Threshold.

For an HPD signal, only the in-band power meter is available. The in-band power measurement accuracy without a user calibration is ±1 dB. User calibration improves the accuracy at a specific

frequency, bandwidth, and temperature by using the broadband power meter to correct the in-band power measurement. This correction occurs when an in-band user calibration is performed.

Procedure:

1. Press the **UTILS** button on the service monitor twice.

   NOTICE: Wait for approximately 1 second or more before pressing the **UTILS** button the second time.

   The **Utility Menu** screen appears.

2. From the menu, select **User Calibration**.

   The **User Calibration** screen appears.

3. Click **Run User Calibration** in the upper right corner of the **User Calibration** screen.

   NOTICE: The default user calibration setting is 1.0 dB. This setting means that a user re-calibration is not indicated on the HPD service monitor until the in-band power measurement has a potential of 1.0 dB error in the measurement (same as the basic in-band power meter accuracy). For HPD, a 0.5 dB value or lower is more appropriate. This value may require more frequent re-calibrations, but it provides better performance.

   A **User Calibration** message box appears instructing you to remove all connectors from the ports.

4. Remove all connectors from the ports. Click **Continue**.

   A progress bar appears showing the progress of the calibration process. The calibration completes in approximately 2 min.

   NOTICE: Failure to remove all connectors and cables from the ports causes an inaccurate user calibration. Any connectors present causes a variation on the impedance seen by the instrument during calibration.

5.12.3
Measuring HPD Base Radio Tx Power, Frequency Accuracy, and Tx EVM

Procedure:

1. Perform the High Performance Data (HPD) service monitor setup steps in Setting Up the HPD Service Monitor for Testing the Base Radio on page 198.
2. Configure the service monitor T/R port to receive transmissions from the base radio, as follows:
   - Click the **T/R** soft key under **RF In** on the right side of the screen.

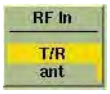

3. Maximize the **RF Control Settings** window, by clicking the upper left corner of the window.

Figure 83: HPD Service Monitor - RF Control Settings Window (Aeroflex 3900 Series Service Monitor)

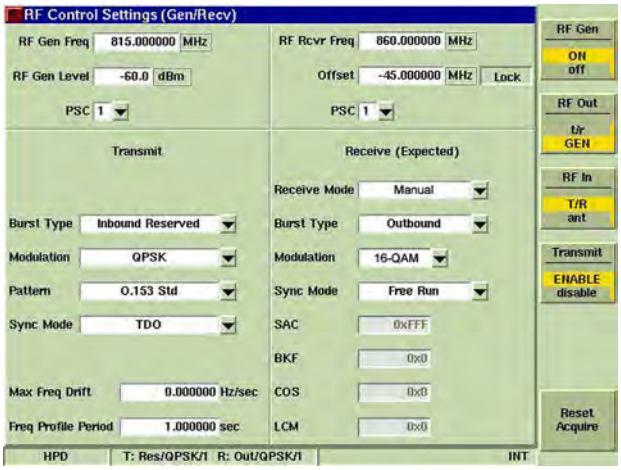

4 Set RF receiver frequency, as follows:

a Click the **RF Rcvr Freq** field in the upper right quadrant of the **RF Control Settings** window.

b Press the number buttons on the front of the service monitor to enter a value in the **RF Rcvr Freq** field.

c If **MHz** is not displayed to the right of the RF receiver frequency value you entered, press the unlabeled button on the front of the service monitor next to the **MHz** soft key.

NOTICE: The value entered should be within the Frequency Range specification for the GTR 8000 Base Radio configuration being tested. See GTR 8000 Base Radio Specifications on page 40.

5 Select **1** from the drop-down list for Pilot Sync Code (**PSC**) in the upper right quadrant of the **RF Control Settings** window.

6 Make the following selections in the **Receive (Expected)** quadrant of the **RF Control Settings** window:

a Select **Manual** from the drop-down list for **Receive Mode**.

b Select **Outbound** from the drop-down list for **Burst Type**.

c Select **16-QAM** from the drop-down list for **Modulation**.

d Select **Free Run** from the drop-down list for **Sync Mode**.

7 Minimize the **RF Control Settings** window by clicking the upper left corner of the window.

The minimized **RF Control Settings** window is visible at the top of the screen as long as all subscreens are minimized. (See Figure 82: HPD Service Monitor Test Screen (Aeroflex 3900 Series Service Monitor) on page 198.) **Modulation Type** is not visible in the minimized **RF Control Settings** window but displays with **Burst Type** and **PSC** at the bottom of the screen.

8 Set-up the test in on the **Test and Measurement Screen**.

a In the **Select Pattern to Transmit** field, key up the base radio for 16-QAM modulation by selecting **16-QAM**.

b Click **Start Pattern Transmission**.

Figure 84: CSS Test And Measurement Screen

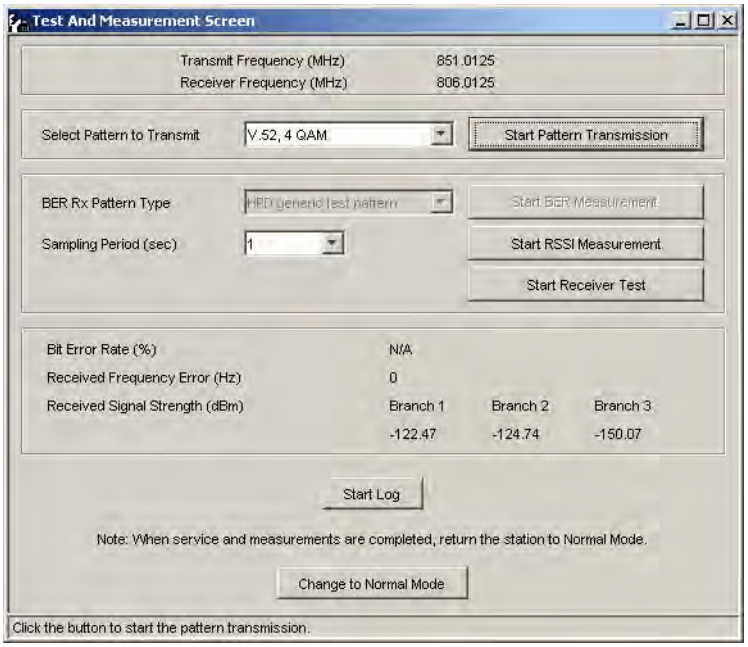

9 Display the base radios transmission readings on the service monitors **Rx Meter** subscreen, as follows: A panel of soft keys displays on the right side of the screen, including two **Reset** keys.

a Click the **Rx Meter** subscreen.

A panel of soft keys displays on the right side of the screen, including two **Reset** keys.

b Click the **Reset Acquire** soft key on the right side of the screen. This action re-synchronizes the test set with the incoming signal.

c Click the **Reset Meters** soft key on the right side of the screen. This stops, clears, and restarts the acquisition of data for the data display fields.

Figure 85: HPD Service Monitor - Rx Meter Subscreen, Reset Soft Keys (Aeroflex 3900 Series Service Monitor)

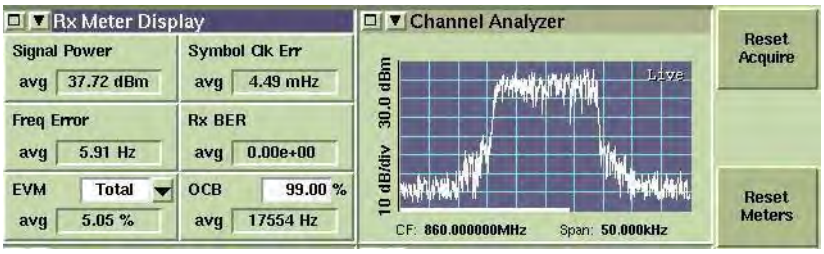

10 Compare the value displayed in the **Signal Power** field to the base radio Tx Power Out specification that matches your base radio configuration. See GTR 8000 Base Radio Specifications on page 40.

NOTICE: Account for cable loss in this comparison.
The output power reference plane is the output connector of the power amplifier. The loss of the transmitter output cable (PA output to the back of the base radio) is 4% at 700/800 MHz. However, the base radio software allows the transmitter output power to be set at 10% above rated value.

11 Note the value that displays in the **Freq. Error** field. Tolerance should be +/- 50 Hz.

12 Note the Error Vector Magnitude (EVM) value that displays in the **EVM avg** field. The value should be less than or equal to 10%.

13 If no further testing is needed, place the base radio in Normal Mode, as follows:

a Click **Change to Normal Mode**.

b At the confirmation screen, click **OK**.

The base radio halts activity in the current mode and switches operation to the requested mode.

5.12.4

Measuring HPD Base Radio Rx Sensitivity and Rx BER

When and where to use:
Follow this procedure to test:

- **Rx Sensitivity:** Does the 1% Bit Error Rate (BER) meet specifications for your High Performance Data (HPD) GTR 8000 Base Radio configuration?
- **Rx BER:** Does -70 dBm produce a 0.01% BER or better, as expected?

Procedure:

1 Perform the service monitor setup steps in Setting Up the HPD Service Monitor for Testing the Base Radio on page 198.

2 Using the soft keys on the right side of the screen, configure the service monitor GEN port to generate inbound signaling to the base radio, as follows:

a Click the **ON** soft key under **RF Gen**.

b Click the **GEN** soft key under **RF Out**.

c Click the **ENABLE** soft key under **Transmit**.

3 Maximize the **RF Control Settings** window by clicking the upper left corner of the window.

All **RF Control Settings** fields display.

Figure 86: HPD Service Monitor - RF Control Settings Window (Aeroflex 3900 Series Service Monitor)

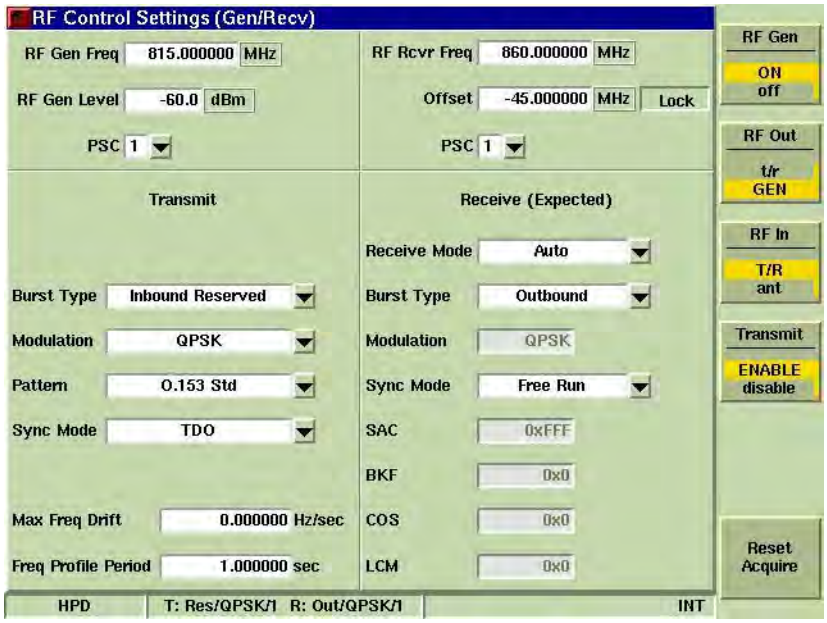

4 Select the following values in the **Transmit** quadrant of the **RF Control Settings** window:

   a Select **Inbound Reserved** for the **Burst Type**.

   b Select a **Modulation Type**.

   NOTICE: The selection should be a modulation type from HPD Receive Sensitivity 1% BER specifications, which include:

   - 64 Quadrature Amplitude Modulation (QAM)
   - 16 QAM
   - Quadrature Phase Shift Keying (QPSK)

   See GTR 8000 Base Radio Specifications on page 40.

   c Select **TDO** for the **Sync Mode**.

   d Select **0.153 Std** for the **Pattern**.

5 Select **Free Run** for the **Sync Mode** in the **Receive (Expected)** quadrant of the **RF Control Settings** window.

6 Select the following values in the upper left quadrant of the **RF Control Settings** window:

   a Click the **RF Gen Freq** field and use the number buttons on the front of the service monitor to enter a value.

   NOTICE: The value entered should be within the Frequency Range specification for the HPD base radio configuration being tested. See GTR 8000 Base Radio Specifications on page 40.

   b Click the **RF Gen Level** field and enter a dBm value, depending on the length of cable between the service monitor and the base radio.

   NOTICE: The value entered should match the receive sensitivity 1% BER specifications for your HPD base radios configuration, for the Modulation Type you selected. See GTR 8000 Base Radio Specifications on page 40.

   c Select **1** from the drop-down list for Pilot Sync Code (**PSC**).

7 Minimize the **RF Control Settings** window by clicking the upper left corner of the window.

The minimized **RF Control Settings** window is visible at the top of the screen as long as all subscreens are minimized. See Figure 82: HPD Service Monitor Test Screen (Aeroflex 3900 Series Service Monitor) on page 198. **Modulation Type** is not visible in the minimized **RF Control Settings** window but displays with **Burst Type** and **PSC** at the bottom of the screen.

8 Connect to the transceiver module in Configuration/Service Software (CSS) through an Ethernet connection. See Connecting Through an Ethernet Port Link on page 140.

9 From the menu, select **Service** → **Test And Measurement Screen**.

Figure 87: Test And Measurement Screen

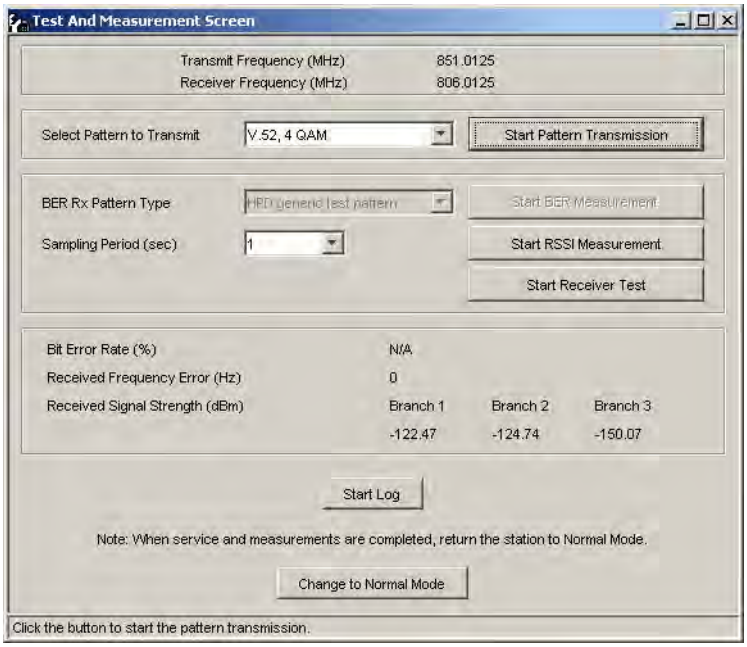

10 Set up the **Test And Measurement Screen** to display received Bit Error Rate (BER) as follows:

a Select a pattern that matches the **Modulation Type** selection for the RF Control Settings in the service monitor.

NOTICE: To match the QPSK Modulation Type on the service monitor screen, select the 4 QAM pattern in CSS.

b Click **Start Pattern Transmission**.

c Click **Start BER Measurement**.

11 Display the base radio transmission readings on the service monitor **Rx Meter** subscreen, as follows:

a Click the **Rx Meter** subscreen.

A panel of soft keys displays on the right side of the screen, including two **Reset** keys.

b Click the **Reset Acquire** soft key on the right side of the screen to re-synchronize the test set with the incoming signal.

c Click the **Reset Meters** soft key on the right side of the screen. This action stops, clears, and restarts the acquisition of data for the data display fields.

Figure 88: HPD Service Monitor - Rx Meter Subscreen and Soft Keys (Aeroflex 3900 Series Service Monitor)

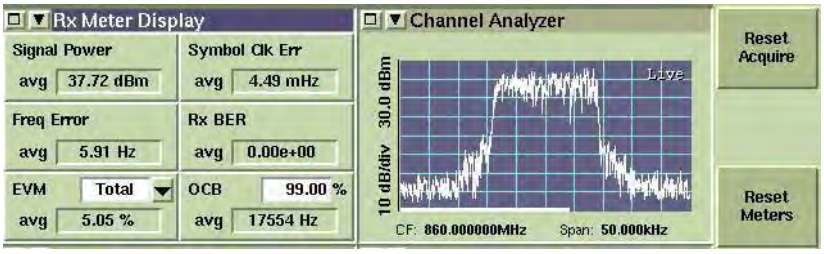

12 On the **RF Control Settings** window of the service monitor, enter lower values in the **RF Gen Level** field until 1% BER is displayed on the CSS **Test And Measurement Screen**. Compare the value in the **RF Gen Level** field to the Receive Sensitivity 1% BER specifications for your HPD base radio configuration. See GTR 8000 Base Radio Specifications on page 40.

NOTICE: Take the cable and splitter loss into account.

13 Enter –70 dBm in the **RF Gen Level** field.

NOTICE: This input value should produce a 0.01% or better BER on the **Test And Measurement Screen** in CSS. If it does not, contact Motorola Solutions Support Center (SSC). See Motorola Solutions Support Center on page 219.

14 When finished testing, perform the following steps on the CSS **Test And Measurement Screen**:

a Click **Stop BER Measurement**.

b Click **Stop Pattern Transmission**.

15 If no further testing is needed, place the base radio in Normal Mode, as follows:

a Click **Change to Normal Mode**.

b At the confirmation screen, click **OK**.

The base radio halts activity in the current mode and switches operation to the requested mode.

5.12.5 Checking Receiver Sensitivity (Self-test Method) (HPD)

When and where to use:
Use this procedure to check the High Performance Data (HPD) receiver sensitivity for the base radio without any test equipment. The base radio uses a factory calibrated low-level noise source at the receiver input to check performance. This procedure can be performed remotely.

Procedure:

1 Connect to the base radio in Configuration/Service Software (CSS) through an Ethernet connection. See Connecting Through an Ethernet Port Link on page 140.

2 From the menu, select **Service** → **Test And Measurement Screen**.

Figure 89: CSS Test And Measurement Screen

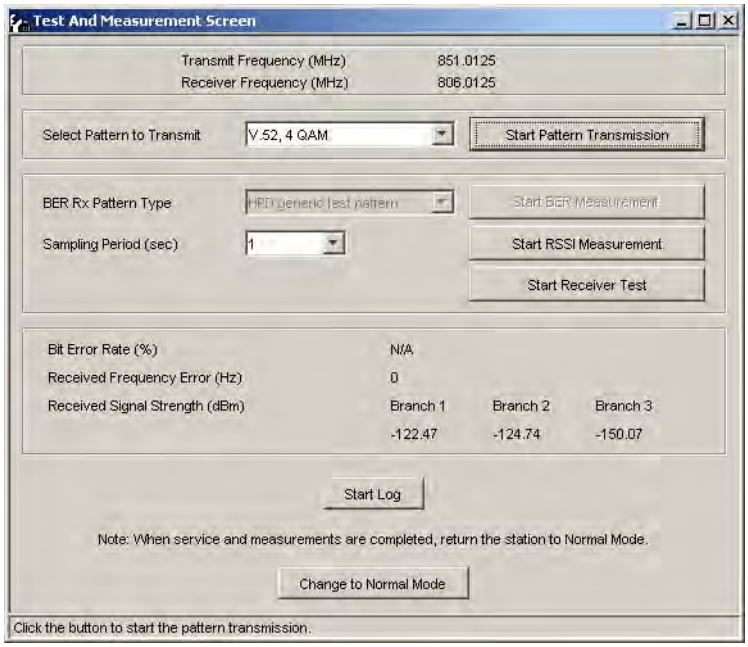

3 If the base radio is not in service mode perform the follows substeps, otherwise go to step 4.

a Click **Change to Service Mode**.

b At the confirmation screen, click **OK**.

The base radio halts activity in the current mode and switches operation to the requested mode.

c Re-open the **Test And Measurement Screen** as described in step 2.

4 Select **Start Receiver Test**.

A confirmation dialog box appears indicating the test progress. After a few seconds, the test concludes with a pass or fail message.

5 Click **OK**.

6 If no further testing is needed, place the base radio in Normal Mode.

a Click **Change to Normal Mode**.

b At the confirmation screen, click **OK**.

The base radio halts activity in the current mode and switches operation to the requested mode.

Chapter 6

GTR 8000 Base Radio Maintenance

This chapter describes periodic maintenance procedures relating to the GTR 8000 Base Radio.

6.1 Fan Grill Cleaning Instructions

If the station equipment is installed in a dusty environment, take precautions to filter the air used for a forced cooling of the station. Excessive dust drawn across and into the device circuit modules by the cooling fans can adversely affect heat dissipation and circuit operation. In such installation, be sure to clean or replace external filtering devices periodically.

If dust has accumulated on the fan grills, cleaning the fan grills is recommended. When cleaning, take care to prevent dust from being pulled into the modules. Use a damp cloth to wipe the front of the fan grills. When removing the power supply, turn off the unit before proceeding.

6.2 Aligning the Internal Frequency Reference Oscillator

NOTICE: The base radio must be turned on for at least one week before the internal frequency reference oscillator is aligned.

See “**Base Radio Service Help** → **Service Screens** → **Alignment Screens**” in the *CSS Online Help* for the alignment procedures.

Chapter 7

GTR 8000 Base Radio Operation

This chapter details tasks performed once the GTR 8000 Base Radio is installed and operational on your system.

7.1 Base Radio Operational States for Trunked Simulcast

GTR 8000 Base Radio modules can be in any one of the following four operational states:

- Standby
- Idle
- Assigned
- Isolated

During initialization, the base radio powers up into the **standby** state and waits for a status packet from the comparator. When initial contact with the comparator has been made, the base radio enters **idle** mode. The base radio sends a status message back to the comparator indicating that it is ready for the assignment.

After a base radio has been **assigned**, it can begin to handle inbound/outbound traffic. In the case where the base radio fails to receive status packets from the comparator, the base radio enters **isolated** mode and dekeys. This **isolated** mode is reported in the Unified Event Manager (UEM).

If the base radio becomes operational again, and receives the status packets from the comparator, it again replies with a channel status message. The base radio returns to the **idle** state and is ready for an assignment from the comparator.

Adjacent Site Search Holdoff

For IP simulcast subsystems with 16 to 32 subsite capacity and geographically redundant prime sites with 1 to 32 subsite capacity, the Transport Network requires longer than 1 second to recover following a failure. To compensate for the subscriber unit scatter, the subscriber units are required to remain on the site for a longer duration following a control channel loss. A message is used to instruct the subscriber units to remain on the site for 10 seconds following the loss of a control channel. The base radio automatically transmits this message upon loss of packets from the prime site.

7.2 Base Radio Operational States for Trunked Repeater and HPD

A GTR 8000 Base Radio can be in one of four operational states:

- Standby
- Idle
- Assigned
- Isolated

During initialization, the base radio powers up into the **standby** state and waits for a status packet from the site controller. After initial contact with the site controller has been made, the base radio enters **idle** mode and sends a status message back to the site controller indicating that it is ready for assignment.

The site controller responds with a channel grant message, and the base radio enables for service. If the base radio has a greater home channel preference setting than other base radios at the site, then the zone controller assigns the base radio as the home channel at the site.

After a base radio has been **assigned**, it can begin to handle inbound/outbound traffic. In the case where the base radio fails to receive a number of consecutive status packets from the site controller, the base radio enters **isolated** mode and dekeys. This isolated mode is reported in the Unified Event Manager.

If the base radio becomes operational again and receives status packets from the site controller, it replies with a channel status message. The site controller may then respond with a channel grant, and the base radio becomes enabled for service again.

7.3 Base Radio Operational States for Conventional

A GTR 8000 Base Radio can be in one of two operational states:

- Standby/Receiving
- Transmit

During initialization, the base radio powers up into the **standby/receiving** state and is enabled for service. The base radio listens for any received transmissions.

After the base radio has received a transmission, it can then key-up and **transmit**.

7.3.1 Packet Data interactions with Multiple NACs

If a base radio supports multiple NACs, such as when using the community base radio feature (F7F/F7E), in addition to a default NAC, inbound data can be received on any incoming NAC and is forwarded to its destination. Outbound data is only transmitted to the default NAC. Outbound data cannot be routed to a selected NAC, it is always sent on the default NAC. Repeated data is only transmitted on the default NAC and does not follow the inbound NAC when community repeater (F7F) is being used.

7.3.2 Supplementary Signaling interactions with Multiple NACs

If a base radio supports multiple NACs, such as when using the community base radio feature (F7F/F7E), in addition to a default NAC, inbound supplementary signaling can be received on any incoming NAC and is forwarded to its destination. If using F7F/F7E, the same that voice would be transmitted, the outbound supplementary signaling is transmitted on either the default NAC or the currently selected NAC. Outbound supplementary signaling cannot be routed to a selected NAC, it is always sent using either the default NAC or the same NAC that voice would be transmitted on according to F7F/F7E functionality.

7.4 Illegal Carrier Determination Feature (Trunked)

The Illegal Carrier Determination feature allows base radio channels to continue operating with system-configurable levels of channel interference. In an ASTRO® 25 system, the base radio uses Received

Signal Strength Indicator (RSSI), an RF Threshold Value, and the Malfunction Timer Value to implement this feature.

Table 48: Illegal Carrier Determination

If the channel receives a...	and is assigned:	and is not assigned:
Valid Network Access Code (NAC)	The base radio does not change since the carrier is considered valid.	If the RF Threshold Value is exceeded, the base radio enters the Illegal Carrier state and generates an Illegal Carrier message to Unified Event Manager (UEM).
Invalid Network Access Code (NAC) OR Carrier activity without NAC	If the RF Threshold Value level is exceeded, the Malfunction Timer is activated. After the timer expires, the base radio enters the Illegal Carrier state and generates an Illegal Carrier message to UEM. While in the illegal carrier state, calls are not assigned to this channel. If the illegal carrier disappears or drops below the RF Threshold Value for 12.5% of the time period defined by the Malfunction Timer Value (or 10 seconds, whichever is greater), an event is sent to UEM clearing the illegal carrier state, the base radio exits the illegal carrier state and the channel is again included in the available channel resource pool for call assignment. If the illegal carrier disappears or drops below the RF Threshold Value for 12.5%, but not less than 10 seconds of the time period defined by the Malfunction Timer Value, an event is sent to UEM.	

7.5 RF Channel Interference Determination Feature (Conventional)

The RF Channel Interference Determination Feature allows radio channels to detect RF interference and log it to the station log. RF Channel Interference is declared when the Carrier Squelch level is exceeded and none of the receive qualifiers are met. Receive qualifiers are the programmed Private Line (PL), Digital Private Line (DPL), or receive Network Access Code (NAC) for the currently active channel.

Chapter 8

GTR 8000 Base Radio Troubleshooting

GTR 8000 Base Radio troubleshooting requires an understanding of hardware-based and software-based diagnostics, as well as testing tools. Support is available from Motorola Solutions to assist with all steps in the troubleshooting process.

This chapter provides fault management and troubleshooting information relating to GTR 8000 Base Radio.

8.1 GTR 8000 Base Radio General Troubleshooting

Table 49: GTR 8000 Base Radio General Troubleshooting

Problem	Troubleshooting
General connectivity problems	**1** If you have access to the equipment, check the LEDs to verify that each piece of equipment is connected and operational. See GTR 8000 Base Radio LEDs on page 264. **2** In Configuration/Service Software (CSS), check the condition of the base radio and all associated devices and links. **3** Verify the base radio configuration through CSS. Verify that the IP address for the base radio is correct. In CSS, send a diagnostic command to enable the base radio. **4** For a Conventional Base Radio, Conventional Receiver, Site Repeater (if present in a Tsub), or an HPD Base Radio (if present in a Tsub), verify that the DNS Hostname is correct. If the DNS Hostname was incorrect and then corrected, further corrections may be needed on the DNS server, UNC, and UEM. See the Troubleshooting chapter in the *Authentication Services* manual. **5** Verify that the physical cabling is firmly connected and in good condition. Check for any sharp bends or kinks in cabling. Test suspected cabling for noise, continuity, attenuation, and crosstalk. Replace the cabling if necessary. **6** Run ping, traceroute, pathping, and other network administration commands to identify any link or intermediate devices (switch or routers) with high latency or connection problems. **7** If the connection fails to operate normally, send a restart command to the base radio through CSS. Consider cycling power to the base radio if necessary. **8** If it still fails to operate properly, create a backup of the current configuration, then reinstall the software and reconfigure the base radio. **9** Replace the base radio if necessary.

Problem	Troubleshooting
Device does not power up	**1** If you have access to the equipment, check the LEDs to determine which equipment is connected and operational. See GTR 8000 Base Radio LEDs on page 264. **2** In CSS, check the alarms for the base radio. **3** Check the power cabling and verify that the power source for the base radio is supplying the appropriate voltage. Try connecting the base radio to another power source or replace the power cabling if necessary. **NOTICE:** Check all power sources as there may be more than one. **4** Check for any physical damage to the modules and check whether the modules were properly grounded. **5** Replace any defective modules.
Device is in a continuous reset state	Assure reference inputs are connected to the appropriate input.
Exciter Failure	Verify that an antenna relay Enabled either in the UNC or CSS may have been disconnected. This disconnect causes the base radio to generate an exciter failure because the antenna relay is controlled and monitored through the exciter module. However, the exciter failure should be ignored until after the antenna relay failure is corrected.
Analog (4-wire) Portion of V.24 Hybrid Link Failure	In a mixed mode configuration, with hybrid links, and when analog link monitor tone is enabled (Analog Link Idle Check is enabled in the CSS), the base radio detects a link failure when the analog link monitor tone and call activity are absent on the receive line (WL1). Disable Analog Idle Link Check in the CSS when the comparator type is ASTRO-TAC with DIGITAC or ASTRO-TAC with MLC 8000. When these failure conditions are met, the base radio: **1** Logs an occurrence of the failure in the local event log. This log is retrievable through the configuration interface. **2** If connected to centralized fault management equipment (optional), transmits an alarm indication to the fault manager to alert the system administrator of the failure. **3** A local visual indication is active due to this failure. Recovery of the link failure results in a similar set of actions to indicate that the failure event cleared. **NOTICE:** A failure of the transport line or a failure of the opposing host on the wireline link both appear to the base radio as a link failure. The base radio cannot distinguish between these two cases.
V.24 Portion of Hybrid Link Fails	In a mixed-mode configuration, with hybrid links, the base radio detects a V.24 link failure when packet activity is absent for a time on the outbound transmit line. When these failure conditions are met, the base radio: **1** Logs an occurrence of the failure in the local event log. This log is retrievable through the configuration interface.

Problem	Troubleshooting
	2 If connected to centralized fault management equipment (optional), transmits an alarm indication to the fault manager to alert the system administrator of the failure. **3** A local visual indication is active due to this failure. **4** Invokes a failure announcement for the 4-wire link because control signaling on the V.24 link drives activity on the 4-wire link. A 4-wire link cannot be used when the V.24 link is down. Recovery of the link failure results in a similar set of actions to indicate that the failure event cleared. **NOTICE:** A failure of the transport line or a failure of the opposing host on the wireline link both appear to the base radio as a link failure. The base radio cannot distinguish between these two cases.
Transceiver Option Card Hardware Malfunction	In the event the base radio detects a hardware issue with the transceiver option card, when used for analog and mixed mode operation, it: **1** Logs an occurrence of the failure in the local event log. This log is retrievable through the configuration interface. **2** If connected to centralized fault management equipment (optional), transmits an alarm indication to the fault manager to alert the system administrator of the failure. The alarm is associated with the base radio control module. **3** A local visual indication is active due to this failure.
Front Fan Malfunction	In the event the fan assembly malfunctions, the base radio: **1** Logs an occurrence of the failure in the local event log. This log is retrievable through the configuration interface. **2** If connected to centralized fault management equipment (optional), transmits an alarm indication of “warning” severity to the fault manager to alert the system administrator of the failure. The alarm is associated with the base radio control module. **3** Provides a local visual indication associated with the failure. **4** If the base radio detects the maximum operable temperature has been exceeded, it transitions to a critical malfunction state, logs the state change, and generates a fault indication if connected to the UEM.
Power Consumption is greater than 35 W with power efficiency package	The following conditions must be met to obtain a power consumption of less than or equal to 35 W: • DC source only • Speaker turned OFF (if equipped with a transceiver option card) • No activation of Aux Out Relays (if equipped with a transceiver option card) • No 29 V AUX loads. For example, active draws by a site controller • CSS configured for applications not requiring receiver diversity • CSS Fan Holdover configured to “short” (length of time the fan stays ON after transmission)

Problem	Troubleshooting
	• Ambient temperature of 104 °F (40 °C) or less (single fan operation – disabling one of the fans within the fan module. See Replacing the Fan Assembly on page 237 for instructions on how to disable the fan.) **NOTICE:** To validate the 35 W standby power consumption specification, wait for the main fans to turn off after the transmitter dekeys. The fan holdover configuration in the CSS controls the turn-off delay of the main fans. Single-fan operation requires the Tx Power Out in the CSS to be limited to 50 W. • Transceiver, power amplifier,power supply, fan, and optional TCXO transceiver option card are all power efficiency package versions
Unable to perform a password reset	If the device module has been replaced and serial port access is not available to configure the IP address, the device may have the account locked out or the backplane slot has passwords enabled. Connect to the front-panel local Ethernet service port using a fixed IP address and perform the password reset. See Connecting Through an Ethernet Port Link on page 140 and Setting the Local Password Configuration in CSS on page 149.

8.2 GTR 8000 Base Radio Troubleshooting Tools

Several tools are available for viewing and monitoring equipment and troubleshooting suspecting problems:

- LEDs
- Unified Event Manager (UEM) to monitor links and components
- Unified Network Configurator (UNC)
- Configuration/Service Software (CSS)
- MOSCAD Network Fault Management (NFM)

NOTICE: The Unified Event Manager (UEM) can be established as a more centralized fault management solution replacing the MOSCAD GMC. See the *Unified Event Manger* and the *UEM/GMC Transition Setup Guide* for details.

In addition, see Quick Connect RF Coaxial Adapters for GTR 8000 Base Radio Support on page 121 for testing system performance.

8.2.1 Links and Components Monitoring in Unified Event Manager

The Unified Event Manager (UEM) monitors critical links and components in the system. Monitoring may take place remotely from a central operations center. Two types of monitoring include:

- Real-time monitoring of UEM Topology Maps, which alert faults as they occur.
- Evaluation of UEM Active Alarms Window on a regularly scheduled basis.

8.2.1.1
Unified Event Manager Active Alarm Window Analyzation

The Unified Event Manager (UEM) **Active Alarms Window** is useful for troubleshooting because it captures alarms that may occur intermittently or during off-hours. For example, you can review the **Active Alarms Window** to correlate reported loss of service with patterns of critical alarms for links and equipment.

When analyzing the **Active Alarms Window**, look for the following patterns:

- Failures sent with time stamps on or about the same time
- Failures from related equipment:
  - Cards in the same device
  - Equipment part of the same subsystem

Many devices send out events that report both critical and non-critical events. Learn to distinguish between critical and non-critical events.

See the *Unified Event Manager* manual or *UEM Online Help* for further details.

8.2.1.2
Diagnostic Options in Unified Event Manager

This table summarizes the base radio diagnostic options in the Unified Event Manager (UEM).

Table 50: Base Radio Diagnostic Options in UEM

Option	Description
Restart	Requests that the base radio performs a reset.
Service	Requests that the base radio enters service mode, allowing a technician to make alignment adjustments and run other tests while the base radio is offline.
Enabled	Requests that the base radio enters the enabled mode and handle traffic.

8.2.2
MOSCAD Network Fault Management

If MOSCAD Network Fault Management (NFM) equipment is supported at the site, additional status, and alarm information for a device can be viewed through the MOSCAD NFM.

Figure 90: MOSCAD Network Fault Management – Example

When an alarm condition occurs, the alarm device for one of the modules begins to flash red. Selecting the LED box opens an alarm pop-up window indicating details of the alarm. To view the status of all alarms for a particular module within the device, select the alarm LED box corresponding to the particular module. Alarms can be acknowledged by pressing the **Acknowledge** button on the screen.

See the *MOSCAD Network Fault Management Feature Guide* for details.

NOTICE: The Unified Event Manager (UEM) can be established as a more centralized fault management solution replacing the MOSCAD GMC. See the *Unified Event Manger* manual and the *UEM/GMC Transition Setup Guide* for details.

8.2.3
Device Troubleshooting in Unified Network Configurator

Use the Unified Network Configurator (UNC) to verify configuration data during system commissioning and later when you maintain or expand the system. Use UNC to do the following to the device:

- Verify configuration
- Correct configuration errors

See the *Unified Network Configurator* manual for further details.

8.2.4
GTR 8000 Base Radio Troubleshooting in Configuration/Service Software

The GTR 8000 Base Radio can be locally or remotely configured or serviced through Configuration/Service Software (CSS). CSS provides access to alarms, status information, and configuration settings for the base radio.

Use CSS for the following tasks which may be useful when troubleshooting the base radio. See the *CSS Online Help* for specific details and instructions when performing these tasks.

- Enable and disable channels and services
- View and save a log of alarms

- Verify the configuration
- Gather troubleshooting information that can be escalated to Motorola Solutions for evaluation

8.2.4.1
Internal Diagnostic Test Alarm Log

The base radio has been designed with internal diagnostic tests that occur on power up and reset. Diagnostic tests are available for the control module and power supply. If a problem occurs during operation, it is reported as an alarm. All alarms are stored in the Alarm Log, accessible with Configuration/Service Software (CSS). The alarm log contains the name of the diagnostic test that failed and the time since the last power up.

8.2.4.2
Local Password and SNMPv3 Passphrase Troubleshooting

The password reset mechanism in the Configuration/Service Software (CSS) application can be enabled/disabled. See “Secure Remote Access Configuration > Device Security Configuration - Security Services (Serial)” in the *CSS Online Help* for information. To obtain the keys for resetting either password or SNMPv3 passphrases for the device, contact Motorola Solutions Support Center (SSC).

NOTICE: The default values for the local passwords and SNMPv3 passphrases, as well as the keys for the local password reset procedure, may vary by system release. These default values and keys are treated as sensitive information and are provided to your organization through secured communication.

Table 51: Local Password and SNMPv3 Passphrase Troubleshooting

Scenario	SNMPv3 Passphrase Known	Local Password Known	To Reset SNMPv3 Passphrase	To Reset Local Log-in Password
User is locked out of the local login, but knows SNMPv3 passphrases	✓	✗	See the *CSS Online Help* “SNMPv3 User Configuration”.	See the *CSS Online Help* “Resetting Device Passwords.”
User knows the local login, but not the SNMPv3 passphrases	✗	✓	See the *CSS Online Help* “Reset SNMPv3 Configuration (Serial)”.	See the *CSS Online Help* “Device Security Configuration – Security Services (Serial)”.
User knows both passphrases and local service password	✓	✓	See the *CSS Online Help* “SNMPv3 User Configuration”.	See the *CSS Online Help* “Device Security Configuration – Security Services (Serial)”.
User does not know SNMPv3 passphrase nor service account password	✗	✗	Contact Motorola Solutions SSC.	Contact Motorola Solutions SSC.

8.3

Site Controller Failure Impact on GTR 8000 Base Radio for Trunked Operation

If the link fails between the base radio and the site controller, the base radio dekeys and does not handle any MSU traffic. MSUs attempt to operate on another channel at the site. If another channel is not available, the MSUs attempt to register at another site.

For HPD and repeater site operation, the base radio receives external frequency reference and network time synchronization from the active site controller over the Ethernet link. If there is a loss of the external time and frequency reference source, the base radio continues to maintain its own time and frequency stability to continue operations for a specified amount of time without degradation. Afterwards, operation continues with minimal degradation.

8.4

Conventional Site Controller Failure - Impact on GTR 8000 Base Radio for Conventional Operation

For IP interfaced conventional base radios, a conventional site controller provides support for dispatch consoles to manage and control the conventional base radios in K core and M core type systems, the conventional site controller only provides support for the console to manage and control the conventional base radios when the primary (and optional secondary) zone controllers are not reachable.

If the conventional site controller fails when it is the active call controller in either type system, the dispatch console loses its ability to manage and control the channel resources. However, subscriber radios may still be able to maintain communications using repeat functionality of the base radios or when the base radios are connected to a comparator. The comparators repeat functionality enables wide area repeat for subscribers.

8.5

Motorola Solutions Support Center

Motorola Solutions Support Center (SSC) can help technicians and engineers resolve system problems, and ensure that warranty requirements are met. Check your contract for specific warranty information.

Motorola Solutions assigns a tracking ticket number that identifies each support call. This ticket number allows Motorola Solutions to track problems, resolutions, and activities for the call, and if possible, communicate the resolution and a status of call so that the SSC can note the resolution and close the ticket.

8.5.1

Information Necessary to Contact Motorola Solutions Support Center

Before calling the Motorola Solutions Support Center (SSC), log all steps taken to troubleshoot the problem and any results of those steps. The SSC can use this information to determine the appropriate support actions.

Listed is the following information to collect before calling the SSC:

- System ID number (such as 2CB5). Each zone in the system has a unique system ID number
- Location of the system

- Date the system was put into service
- Software and firmware versions
- Symptom or observation of the problem, such as:
  - When did it first appear?
  - Can it be reproduced?
  - Are there any other circumstances contributing to the problem (for example, loss of power)?
- Maintenance action preceding the problem, such as:
  - Upgrade of software or equipment
  - Changes to hardware or software configuration
  - Reload of software from a backup disk, CD, or DVD with the version and date

Dispatch Support:

- Site ID
- Description of problem
- Severity of issue

Tech Support:

- Site ID
- Billing information (If not being billed under contract)
- Name or model number of product causing the issue (Helps get you over to proper tech support group)

Return Authorization:

- Site ID
- Part Number and/or description of part
- How being billed
- Where it is being billed
- Where it is being shipped

8.5.2
Where to Call for Service

After collecting the required information and writing a detailed problem report, contact the Motorola Solutions Support Center (SSC) to help with the problem.

8.5.2.1
Motorola Solutions Support Center

The Motorola Solutions Support Center (SSC) is the primary Motorola Solutions contact. Call Motorola Solutions SSC:

- Before any software reload
- To confirm troubleshooting results and analysis before removing and replacing a Field Replaceable Unit (FRU) or Field Replaceable Equipment (FRE) to repair the system

Motorola Solutions SSC contact information:

- Phone: (800) 221-7144 for domestic calls and (302) 444–9800 for international calls
- Fax: (847) 725-4073

8.5.3
Subcontractors

The Motorola Solutions Service Subcontractor Assessment program ensures that service people Motorola Solutions contracts meet strict minimum requirements before they can work on any system. For more information on this program, contact the Motorola Solutions representative.

Chapter 9

GTR 8000 Base Radio FRU Procedures

GTR 8000 Base Radios are composed of numerous Field Replaceable Units (FRUs) and field replaceable parts. If you must replace a FRU or part, it is essential to obtain the precise FRU Kit Number or part number, and to review the replacement procedures provided, including all safety precautions and system impact information.

This chapter lists the FRUs and Field Replaceable Entities (FREs), and includes replacement procedures applicable to GTR 8000 Base Radio.

9.1 Field Replaceable Units (FRUs) and Parts

When ordering Field Replaceable Units (FRUs), provide the FRU Kit Number. When ordering field replaceable parts, provide the part number. Contact Motorola Solutions Support Center (SSC) as needed for numbers not provided here (for cables internal to a GTR 8000 Base Radio, the part numbers are not listed in this documentation, but you can locate the part number on the cable before contacting Motorola Solutions SSC). See Motorola Solutions Support Center on page 219.

WARNING: To guard against personal injury and/or damage to equipment, place the trunked base radio in Service Mode when performing service. The GTR 8000 Base Radio periodically keys up to pseudo train its linear transmitter autonomously when not assigned by the zone controller. Tx Inhibiting the base radio also prevents the transmitter from keying. Remember to place the base radio back in Normal Mode when service is complete.

Table 52: GTR 8000 Base Radio Field Replaceable Units

Component Type	FRU Kit Number	Replacement Procedure
Transceiver Module (700/800 MHz)**	DLN6885A	Replacing a Transceiver Module on page 231
Transceiver Module (UHF R1, 380–435 MHz)**	DLN6888A	
Transceiver Module (UHF R2, 435–524 MHz)**	DLN6884A	
Transceiver Module (VHF, 136–174 MHz)**	DLN6892A	
Transceiver Module w/OCXO Transceiver Option Card (700/800 MHz)**	DLN6883A	
Transceiver Module w/OCXO Transceiver Option Card (UHF R1, 380–435 MHz)**	DLN6889A	
Transceiver Module w/OCXO Transceiver Option Card (UHF R2, 435–524 MHz)**	DLN6886A	

Component Type	FRU Kit Number	Replacement Procedure
Transceiver Module w/OCXO Transceiver Option Card (VHF 136–174 MHz)**	DLN6893A	
Power Efficiency Transceiver Module w/TCXO* Transceiver Option Card (UHF R1, 380–435 MHz)**	DLN6890A	
Power Efficiency Transceiver Module w/TCXO* Transceiver Option Card (UHF R2, 435–524 MHz)**	DLN6887A	
Fan Module	DLN6898A	Replacing the Fan Assembly on page 237
AC/48 V DC Power Supply	DLN6781A (0182516W14)	Replacing a Power Supply on page 238
Power Efficiency AC/48 V DC Power Supply	DLN6805A (0182516W20)	
Power Amplifier Module (Low-Power/30W, 700/800 MHz)	DLN6998A	Replacing a Power Amplifier on page 242
Power Amplifier Module (700/800 MHz)	DLN6895A	
Power Amplifier Module (High-Power/150W, 800 MHz)	DLN6935A	
Power Amplifier Module (High-Power UHF R1, 380–435 MHz)	DLN6891A	
Power Amplifier Module (Low-Power/30W UHF R1, 380–435 MHz)	DLN7026A	
Power Amplifier Module (UHF R2, 435–524 MHz)	DLN6896A	
Power Amplifier Module (VHF, 136–174 MHz)	DLN6897A	
Power Amplifier Module (High-Power/100W VHF, 136–174 MHz)	**TBD**	
Power Amplifier Module (900 MHz)	DLN6894A	

* Available only for non-simulcast conventional systems.

** The transceiver field replacement units are not compatible with ASTRO® 25 base radio software distributed before July 2013. BEFORE installing the replacement transceiver, ensure that all base radios at the site meet the minimum software version requirements listed. Contact Motorola Solutions SSC at 800-422-4210 if you do not have access to compatible software. See Transceiver Software and Feature Compatibilities on page 226 for details.

Table 53: GTR 8000 Base Radio Field Replaceable Parts

Component Type	Part Number	Replacement Procedure
Power Supply Fan Module	5985167Y02	Replacing a Power Supply Fan on page 240

Component Type	Part Number	Replacement Procedure
GTR 8000 Base Radio Backplane	0180706K30	Replacing a GTR 8000 Base Radio Backplane on page 245
Preselector 700 MHz	0185171Y02	Replacing a Preselector Filter on page 250
Preselector 700/800 MHz	0185171Y01	
Preselector Mounting Bracket	0785024Y01	
Preselector QMA Cable End	3085664Y01	
Preselector BNC to QMA Cable	3085665Y01	
Preselector Mini UHF N-Bulkhead Cable	3085664Y02	
Preselector Mini UHF BNC Cable	3085664Y03	
Preselector UHF 380–433 MHz	CFX1075A	
Preselector UHF 435–470 MHz	TLE5992A	
Preselector UHF 470–524 MHz	TLE5993A	
Preselector VHF 136–154 MHz	TFD6511A	
Preselector VHF 150–174 MHz	TFD6512A	
Transmit Post Filter 700 MHz	9184680Y01	Replacing Transmit Filters (700/800 MHz) on page 251
Transmit Post Filter 800 MHz	9184680Y02	
External Dual Circulator Tray	DLN1317A	Replacing the Dual Circulator/Isolator Modules on page 253
External Dual Circulator Tray UHF 380–435	CLE6203A	
Duplexer 700 MHz	9184718Y01	Replacing a Duplexer (700/800 MHz) on page 257
Duplexer 800 MHz	9184718Y02	
Duplexer UHF 380–403 MHz	0185417U10	Replacing a Duplexer (UHF) on page 259
Duplexer UHF 403–435 MHz	0185417U04	
Duplexer UHF 435–470 MHz	0185417U05	
Duplexer UHF 470–494 MHz	0185417U06	
Duplexer UHF 494–512 MHz	0185417U07	
Duplexer VHF 136–146 MHz	0185417U01	Replacing a Duplexer (VHF) on page 261
Duplexer VHF 144–160 MHz	0185417U02	
Duplexer VHF 158–174 MHz	0185417U03	
Antenna Relay	40009272002	Replacing an Antenna Relay on page 262
Antenna Relay and Circuit Load Temperature Cable	3084848Y01	
Antenna Relay Machine Screws (2)	0310909A54	
External Speaker Kit	HSN1006A	
Microphone Kit	GMMN4063B	

Table 54: GTR 8000 Base Radio Cabinet Field Replacement Parts

Component Type	Part Number	Replacement Procedure
Static Rail Bracket	07009411001	
Cabinet, 15 RU, 600D, EIA 19 in.	15009721001	
Cabinet Door, 15 RU	15009728001	Removing/Replacing a Cabinet Door on page 98
Rodent Proof Grommet for 3.5 in. Hole	15009729001	
Cabinet, 24 RU, 600D EIA 19 in.	15009721002	
Cabinet Door, 24 RU	15009728003	Removing/Replacing a Cabinet Door on page 98
M6 Cage Nut	0285504U05	

Table 55: Individual Replaceable Parts on External Dual Circulator Tray

Component Type	Part Number	Replacement Procedure
Dual Circulator 700/800 MHz	0185172Y01	Replacing the Dual Circulator/Isolator Modules on page 253
Dual Circulator UHF 380–435 MHz	0185416U09	
Dual Circulator UHF 435–470 MHz	0185416U05	
Dual Circulator UHF 470–524 MHz	0185416U06	
Dual Circulator VHF 136–146 MHz	0185416U01	
Dual Circulator VHF 144–160 MHz	0185416U02	
Dual Circulator VHF 158–174 MHz	0185416U03	
Circulator Load 700/800 MHz	TLN3391A	
Circulator Load UHF/VHF	TLN3391A	
Low Pass/Harmonic Filter 700/800 MHz	9185202U04	
Low Pass/Harmonic Filter UHF	9185856Y01	
Low Pass/Harmonic Filter VHF	9185856Y03	

Table 56: GTR 8000 Base Radio Cables

Component Type	Part Number
System Connector Cable – SCSI2 Base Radio to Champ	30009466002
Antenna Relay Control Cable	30009475001
Antenna Relay Mini UHF Cable	3085664Y04
Antenna Relay QMA Cable	3085664Y05
Antenna Relay BNC Cable	3013943J08
Antenna Relay 75 CM Cable	3013942M23
Antenna Relay 32 CM Cable	3013942M11

Component Type	Part Number
Antenna Relay 25 CM Cable	3013943E08
External Speaker Cable	0185180U01
Cable DC Red/Black 2806mm	30009459002
Cable DC Black/Blue 2806mm	30009459004
Battery Temp Sensor 3000mm	30009478001
Cable Battery Temp Extension 15500mm	30009461003
Analog Simulcast Cable	30009398002
V.24 or Wireline Cable	30009455002
Analog Simulcast Cable Assembly	30009467001
Dongle Adapter – Telco to Trunking Control and DSM	30009468001
Compact Base Cable Kit	DLN7013A
Compact Expansion Cable Kit	DLN7014A

9.2 Transceiver Hardware Generations

As of July 2013, the GTR 8000 Base Radio is shipped with a new generation of transceiver hardware (referred to in this manual as GEN 2). The hardware updates are intended to extend the life of the device as seamlessly as possible. This section details relevant differences and compatibility requirements for GEN 1 and GEN 2 hardware.

9.2.1 Transceiver Software and Feature Compatibilities

The GEN 2 transceiver hardware is backwards compatible and interchangeable with GEN 1 transceiver hardware on ASTRO® 25 7.7 and later systems. GEN 1 transceivers can no longer be ordered; however, spare inventory of GEN 1 transceivers can be used as Field Replaceable Unit (FRU) replacements.

All ASTRO® 25 system features are supported on GEN 1 and GEN 2 transceivers, with the following exceptions.

Table 57: System Feature Exceptions

Feature	GEN 1 Transceiver	GEN 2 Transceiver
X2 TDMA	Supported	Not Supported
3600 Operation	Not Supported	Supported

GEN 2 transceiver hardware is not compatible with ASTRO® 25 GTR 8000 Base Radio software distributed before July 2013. The transfer operation fails if you perform a software download using a SWDL application released before July 2013.

BEFORE installing a FRU replacement or expansion channel at an existing site, ensure that you are using the latest available SWDL application, and that all base radios and receivers at the site meet the minimum software version requirements listed. Contact Motorola Solutions Support Center (SSC) at 800-422-4210 if you do not have access to compatible software.

Table 58: Minimum Software Download Version Requirements

ASTRO® 25 System Release	HPD	Site Repeater	Multi-Site	Conventional	3600
7.6 and earlier	Not Supported			N/A	N/A
7.7	HPDBR_ R07.7X.023	SiteRptrBR_ R07.7X.031	MsBR_ R07.7X.033	N/A	N/A
7.8	HPDBR_ R07.8X.033	SiteRptrBR_ R07.8X.038	MsBR_ R07.8X.038	N/A	N/A
7.9	HPDBR_ R07.9X.049	SiteRptrBR_ R07.9X.050	MsBR_ R07.9X.051	ConvRptrBR_ R07.9X.051	Any Version
7.11	HPDBR_ R07.BX.098	SiteRptrBR_ R07.BX.102_P2 SiteRptrBR_ R07.BX.102_P2	MsBR_ R07.BX.102_X2 MsBR_ R07.BX.102_P2	ConvBR_ R07.BX.100	Any Version
7.12	HPDBR_ R07.CX.051	SiteRptrBR_ R07.CX.051_X2 SiteRptrBR_ R07.CX.051_P2	MsBR_ R07.CX.051_X2 MsBR_ R07.CX.051_P2	ConvBR_ R07.CX.057	Any Version
7.13	HPDBR_ R07.DX.073	SiteRptrBR_ R07.DX.079_X2 SiteRptrBR_ R07.DX.079_P2	MsBR_ R07.DX.079_X2 MsBR_ R07.DX.079_P2	ConvBR_ R07.DX.074	Any Version
7.14 and later	Any Version				

CAUTION: It is crucial that a site software download is performed at a trunked ASTRO® 25 site to ensure that all devices are on the same software version, VLAN, and active bank. Failure to perform this step, results in the replacement transceiver or expansion channel to have a mismatch in software versions. If a mismatch in software versions occurs, the transceiver may go into a configuration mode of operation with a reason of ‘Invalid Software Version’.
A site software download is not available for conventional or trunked 3600 devices.

9.2.2 Identifying Transceiver Hardware Generation

Label

GEN 1 and GEN 2 transceiver modules can be identified by examining the physical hardware label. GEN 2 modules have a light blue label with ‘GEN 2’ clearly noted on it, while GEN 1 modules have a white label with no GEN identification.

Figure 91: GEN 1 Transceiver Module

Figure 92: GEN 2 Transceiver Module

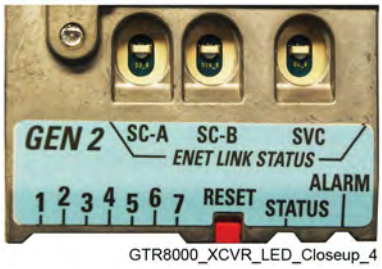

Configuration/Service Software

GEN 1 and GEN 2 transceiver modules already installed in a system can be identified through the **Hardware Version** screen of the Configuration/Service Software (CSS).

9.2.3

Transceiver FRU Number Mappings

Table 59: Transceiver FRU Number Mappings

Transceiver FRU Number	GEN 1 (Shipped before Nov 2013)	GEN 2 (Shipped starting July 2013)
Transceiver Module (700/800 MHz)	DLN6566A	DLN6885A
Transceiver Module w/OCXO Transceiver Option Card (700/800 MHz)	DLN1430A	DLN6883A
Transceiver Module w/OCXO Transceiver Option Card (900 MHz)		DLN6923A
Transceiver Module (UHF R2, 435–524 MHz)	DLN1346A	DLN6884A
Power Efficiency Transceiver Module (UHF R2, 435–524 MHz)	DLN6789A	
Transceiver Module w/OCXO Transceiver Option Card (UHF R2, 435–524 MHz)	DLN1433A	DLN6886A

Transceiver FRU Number	GEN 1 (Shipped before Nov 2013)	GEN 2 (Shipped starting July 2013)
Power Efficiency Transceiver Module w/TCXO Transceiver Option Card (UHF R2, 435–524 MHz)	DLN6790A	DLN6887A
Transceiver Module (UHF R1, 380–435 MHz)	DLN1395A	DLN6888A
Power Efficiency Transceiver Module (UHF R1, 380–435 MHz)	DLN6786A	
Transceiver Module w/OCXO Transceiver Option Card (UHF R1, 380–435 MHz)	DLN1432A	DLN6889A
Power Efficiency Transceiver Module w/TCXO Transceiver Option Card (UHF R1, 380–435 MHz)	DLN6787A	DLN6890A
Transceiver Module (VHF, 136–174 MHz)	DLN1376A	DLN6892A
Transceiver Module w/OCXO Transceiver Option Card (VHF 136–174 MHz)	DLN1431A	DLN6893A

9.3 Power Amplifier Hardware Generations

Starting in July 2013, the GTR 8000 Base Radio is shipped with a new generation of power amplifier hardware (referred to in this manual as GEN 2). The hardware updates extend the life of the base radio as seamlessly as possible. This section details relevant differences and compatibility requirements for GEN 1 and GEN 2 hardware.

9.3.1 Power Amplifier Software and Feature Compatibilities

The GEN 2 power amplifier hardware is fully backwards compatible and completely interchangeable with GEN 1 power amplifier hardware. GEN 1 power amplifiers can no longer be ordered; however, spare inventory of GEN 1 power amplifiers can be used as Field Replaceable Unit (FRU) replacements.

All ASTRO® 25 system features are supported on GEN 1 and GEN 2 power amplifiers. All ASTRO® 25 system release software is supported on GEN 1 and GEN 2 power amplifiers.

9.3.2

Identifying Power Amplifier Hardware Generation

Label

GEN 1 and GEN 2 power amplifier modules can be identified by examining the physical hardware label. GEN 2 modules have a light blue label with ‘GEN 2’ clearly noted on it, while GEN 1 modules have a white label with no GEN identification.

Figure 93: GEN 1 Power Amplifier Module

Figure 94: GEN 2 Power Amplifier Module

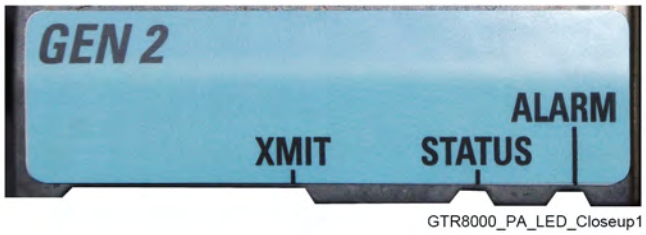

CSS

GEN 1 and GEN 2 power amplifier modules already installed in a system can be identified through the **Hardware Version** screen of the Configuration/Service Software (CSS).

9.3.3

Power Amplifier FRU Number Mappings

Table 60: Power Amplifier FRU Number Mappings

Power Amplifier FRU Number	GEN 1 (Shipped before Nov 2013)	GEN 2 (Shipped starting July 2013)
Power Amplifier Module (Low-Power/30W, 700/800 MHz)	N/A	DLN6998A
Power Amplifier Module (700/800 MHz)	DLN6567A	DLN6895A
Power Amplifier Module (High-Power/150W, 800 MHz)	N/A	DLN6935A

Power Amplifier FRU Number	GEN 1 (Shipped before Nov 2013)	GEN 2 (Shipped starting July 2013)
Power Amplifier Module (High-Power UHF R1, 380–435 MHz)	DLN1396A	DLN6891A
Power Efficiency Power Amplifier Module (High-Power UHF R1, 380–435 MHz)	DLN6788A	DLN6891A
Power Amplifier Module (Low-Power/30W UHF R1, 380–435 MHz)	N/A	DLN7026A
Power Amplifier Module (UHF R2, 435–524 MHz)	DLN1347A	DLN6896A
Power Efficiency Power Amplifier Module (UHF R2, 435–524 MHz)	DLN6792A	DLN6896A
Power Amplifier Module (VHF, 136–174 MHz)	DLN1377A	DLN6897A
Power Amplifier Module (High-Power/100W VHF, 136–174 MHz)	DLN6725A	**TBD**
Power Amplifier Module (900 MHz)	DLN6779A	DLN6894A

9.4 Replacing a Transceiver Module

Figure 96: GTR 8000 Base Radio Modules on page 232 shows the captive screws that secure the transceiver module to the chassis in the standalone base radio configuration.

Figure 95: Transceiver Module

Figure 96: GTR 8000 Base Radio Modules

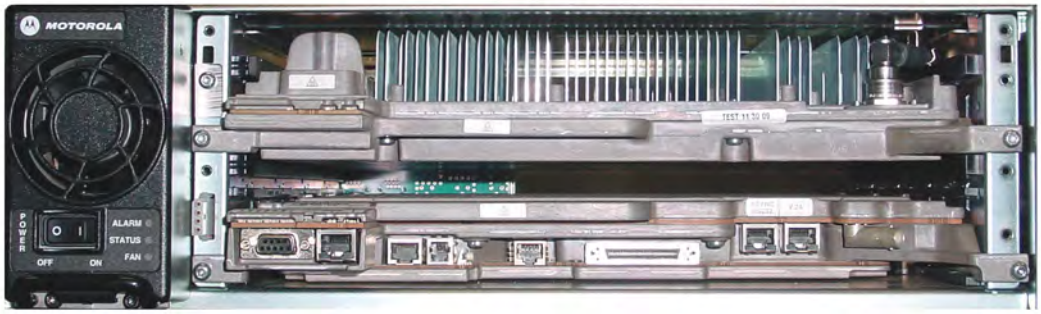

GTR8000_XCVR_wSAC_chassis

NOTICE: The IP address for the device is available through a serial port connection in Configuration/Service Software (CSS) in the **Tools** menu.

Prerequisites: Before replacing the transceiver, pull configuration and hardware information from the transceiver into the Unified Network Configurator (UNC) by performing a “Pull All” procedure from the UNC. See the “Scheduling the Pull of Device Configurations” section in the *Unified Network Configurator* manual.
This step may not be possible if communication is severed between the transceiver and the UNC, or if the transceiver is within a K core or non-networked site.

Procedure:

1 Wear an electrostatic discharge (ESD) strap and connect its cable to a verified good ground.

CAUTION: Wear the ESD strap throughout this procedure to prevent ESD damage to any components.

2 Locate the transceiver module being replaced.

3 If the transceiver module is not operational, go to step 9.

4 Connect to the transceiver module Ethernet service port using CSS. See Connecting Through an Ethernet Port Link on page 140.

5 Save the base radio configuration to the service computer/laptop as follows:

a From the menu, select **File** → **Read Configuration From Device**.

b At the confirmation screen, click **OK**.

c When the **Progress Monitor** screen is complete, click **OK**.

d From the menu, select **File** → **Save As**.

e On the **Properties Screen**, enter the IP address of the base radio. Click **OK**.

f On the **Save** window, select the directory where you want to save the configuration file, type a meaningful name for the file (use .cpl as the extension or do not type an extension). Press ENTER.

The base radio configuration is saved to the location indicated. The configuration file is reloaded later to the replacement transceiver.

6 For a trunked base radio, place the base radio into Service Mode so that the system does not attribute the loss of channel to a failure:

a From the menu, select **Service** → **Test and Measurement Screen**.

The **Test and Measurement Screen** appears.

b Click **Change to Service Mode**.

c At the confirmation screen, click **OK**.

The base radio halts activity in the current mode and switches operation to the requested mode.

7 Optional: If you choose to turn off the power, set the rocker switch on the front of the associated power supply to the Off (O) position.

NOTICE:
It is not necessary to turn off the power supply for the transceiver module being replaced, as the modules can be swapped out with the power on.

8 Disconnect the Ethernet cable from the service port on the transceiver being replaced.

9 Remove the fan assembly to gain access to the transceiver module. See Replacing the Fan Assembly on page 237.

IMPORTANT: Although the transceiver module can be swapped out without shutting the power off, minimize the amount of time the fan assembly is removed so the circuitry that remains powered on does not overheat and shut down.

10 Label and disconnect all cables from the ports on the transceiver.

11 Using a T20 bit, loosen the two captive screws on the front of the transceiver module to disengage them from the chassis.

12 Using the handle, gently pull the transceiver module straight out along the guides on which it sits.

13 Slide in the replacement transceiver module along the guiding rails until it is engaged. A slight push may be needed to securely engage the module.

IMPORTANT: If the transceiver module stops well before it is engaged, it is in an incorrect position. Either it is in the wrong slot or it is rotated 180°. The module has a keying feature that prevents it from going all the way into an incorrect slot, or going into the correct slot but rotated 180°. Do not try to force the module.

LEDs on the transceiver turn on when it is engaged.

14 Using a T20 bit, tighten the two captive screws on the front of the module to secure the transceiver module to the chassis.

15 Reconnect all cables to the ports on the transceiver.

16 Reinstall the fan assembly. See Replacing the Fan Assembly on page 237.

17 Optional: If you chose to turn off the power, set the rocker switch on the front of the associated power supply to the On (I) position.

18 Perform basic device configuration in CSS using the serial port. See Connecting Through a Serial Port Link on page 135.

a Set the IP Address and BR_CM Pairing Number for the device. See Setting the Device IP Address and Pairing Number in CSS on page 137.

b Set the Serial Security Services. See Setting the Serial Security Services in CSS on page 138.

19 On systems with MAC Port Lockdown implemented, disable MAC Port Lockdown if the device being replaced is a colocated base radio, at a repeater site or simulcast site. The switch port where the colocated replacement device is connected to needs to be Unlocked before connecting with CSS or performing a software download. See the *MAC Port Lockdown* manual for instructions on how to disable MAC Port Lockdown.

20 Open Software Download Manager application, and perform the following:

CAUTION: Load the correct version of the software. A mismatch in software versions may occur when replacing the transceiver module with an on-hand spare. A mismatch in software versions may cause all base radios to go into a configuration mode of operation with a reason of 'Invalid Software Version'. To exit the base radio from the configuration mode, see **CSS Procedures** → **Changing from Configuration to Normal Mode** in the *CSS Online Help*.

a From the **Advanced Options** menu, select the transfer type.

b From the menu, select **File** → **File Manager**.

The **Software Depot File Manager** opens.

c From the menu, select **Component Operations** → **Import Fileset**.

The **Import a Fileset Into the Software Depot** dialog box appears.

d Click **Browse** and search for the **swdlv3.cfg** file, or follow path: `E:\swdl\swdlv1.cfg` or `swdlv3.cfg`. Click **Open**.

The file appears in the **Configuration File Path** field of the dialog box.

e Click **Generate**. Click **OK**.

The **Import a Fileset Into the Software Depot** dialog box closes and the software component appears in the **Components In the Software Depot** list of the **Software Depot File Manager** window.

f Exit the **Software Depot File Manager**.

21 For a conventional or trunked 3600 device, perform a single device software download to transfer and install the latest base radio software using Software Download Manager as follows:

a Click **Open Single Device Mode**.

b Enter the ***<IP address>*** of the device. Click **Connect**.

If the device supports SNMPv3, a **Security Level** screen appears.

c Enter the **Authentication Password** and **Encryption Password**, if the chosen security level required inserting these credentials. Click **OK**.

d In the **Select an option** drop down list, select **Upgrade**.

e In the **Operation Type** field, select **Transfer and Install**.

f In the **Application Type** drop down list, select the application to install.

g In the **Software Version** drop down list, select the appropriate software version.

h In the **Bank Selection** drop down list, select the bank to receive the software. Select **Automatic** to store the software in the bank that is more suitable for the device.

i Select **Start Operation**.

j In the window that appears, click **Proceed**.

If the transfer was successful, the progress bar in the **Operation Status** tab displays green. If the transfer failed, the progress bar displays red.

22 Perform a site software download and installation for a trunked ASTRO® 25 base radio.

NOTICE: A site software download is not available for conventional or trunked 3600 devices.

CAUTION: It is crucial that a site software download is performed at the site to ensure that all devices are on the same software version, VLAN, and active bank. Failure to perform this step results in the replacement transceiver or expansion channel to have a mismatch in software versions. If a mismatch in software versions occurs, the transceiver may go into a configuration mode of operation with a reason of 'Invalid Software Version'.

See one of the following procedures:

- For GTR 8000 Base Radios with PSC 9600 Site Controller: Performing a Site Download With PSC 9600 Site Controllers on page 276.
- For GTR 8000 Base Radios with GCP 8000 Site Controller: Performing a Site Software Download With GCP 8000 Site Controllers on page 278.

23 Disconnect the service computer/laptop from the transceivers DB-9 serial port.

24 Perform basic device configuration using the Ethernet port in CSS. See Connecting Through an Ethernet Port Link on page 140.

a Set the current date and time. See Setting the Date and Time in CSS on page 143.

b Set up the local Password Configuration (optional). See Setting the Local Password Configuration in CSS on page 149.

NOTICE: An IP address must be configured to set up the local password. If the serial port access is not available to configure the IP address, the transceiver may have the account locked out or the backplane slot has passwords enabled. Connect to the front-panel local Ethernet service port using a fixed IP address to perform the password reset. See Connecting Through an Ethernet Port Link on page 140.

25 Complete the configuration of the Information Assurance features using CSS, as follows:

a Change the SNMPv3 configuration and user credentials. See Changing SNMPv3 Configuration and User Credentials in CSS on page 143.

b Create, update, or delete an SNMPv3 user. See Adding or Modifying an SNMPv3 User in CSS on page 146.

c Verify the SNMPv3 credentials. See Performing an SNMPv3 Connection Verification in CSS on page 146.

d Set the Software Download Manager (SWDL) transfer mode. See Setting the SWDL Transfer Mode in CSS on page 147.

e Configure Domain Name Services (DNS). See Chapter 7, "Configuring DNS with CSS" in the *Authentication Services* manual.

f Configure for Secure SHell (SSH). See Chapter 4, "Configuring SSH for Devices in an RF Site" in the *Securing Protocols with SSH* manual or see "Device Security Configuration – Remote Access/Login Banner (Ethernet)" in the *CSS Online Help*.

NOTICE: Restore the Clear Protocols parameters.

g Enable RADIUS Authentication. See Chapter 7, "Configuring RADIUS Sources and Parameters with CSS" in the *Authentication Services* manual.

h Enable Centralized Authentication. See Chapter 7, "Enabling/Disabling Centralized Authentication with CSS" in the *Authentication Services* manual.

i Set the Local Cache Size for Centralized Authentication. See Chapter 7, "Setting the Local Cache Size for Central Authentication in CSS" in the *Authentication Services* manual.

j Enable Centralized Event Logging (if required by your organization). See Chapter 6, "Enabling/Disabling Centralized Event Logging on Devices with CSS" and Chapter 1, "Event Logging Client Configuration" for proper hostnames in the *Centralized Event Logging* manual.

k Set the Network Time Protocol (NTP) Server Settings. See NTP Server Settings in CSS on page 148.

26 From CSS, restore the Codeplug Archive from backup. Reload the configuration file onto the new device, as follows:

a From the menu, select **File** → **Open**.

b Locate and open the previously saved configuration file for the base radio.

NOTICE: If you were not able to back up the base radio configuration from the previous base radio, use the configuration from your system build book or use the default base radio configuration file. Specific settings for the base radio must still be configured. See the *CSS Online Help* for detailed configuration instructions. If the base radio is part of a Power Efficiency Package, ensure that the base radio **Tx Power Out** in the CSS is limited to 50 W.

c On the **Properties** window, click **OK**.

d When the **Progress Monitor** screen is complete, click **OK**.

e From the menu, select **File** → **Write Configuration To Device**. Click **OK**.

f On the Ethernet connection confirmation screen, click **OK**.

g On the **Connection** screen, enter the ***<IP Address>*** and click **Connect**.

h On the **SNMPv3 PassPhrase Prompt** dialog box, enter the **User Information** and **Passphrase Information**. Click **OK**. If Authentication Services are not enabled on a device, click **OK** when the dialog box appears.

i On the confirmation screen, click **OK**.

j When the **Progress Monitor** screen is complete, click **OK**.

The configuration from the file selected is loaded into the base radio. Communication with the base radio is not available until the reset is complete.

27 Read the base radio, as follows:

a From the menu, select **File** → **Read Configuration From Device**.

b On the confirmation screen, click **OK**.

c When the **Progress Monitor** screen is complete, click **OK**.

28 Place the base radio into Normal Mode, as follows:

a From the menu, select **Service** → **Mode Screen**.

The **Mode Screen** appears.

b Click **Change to Normal Mode**.

c At the confirmation screen, click **OK**.

The base radio halts activity in the current mode and switches operation to the requested mode.

29 On systems with MAC Port locking, disable the locking and then re-enable the locking with the MAC address of the base radio. The device being replaced may be connected to an Ethernet port on a switch which implements MAC Port locking (HP switch or site controller). If so, the Ethernet switch port must be unlocked and relocked to the MAC address of the replacement device. See the *MAC Port Lockdown* manual for instructions on how to disable and enable MAC Port locking.

NOTICE: Following device restoration, if it was connected to an HP switch port, the HP switch port may have been disabled due to an unexpected MAC address. If so, re-enable the port on the HP switch.

30 Replace the base radio in the Unified Network Configurator (UNC). See Chapter 4, “Replacing a Device” in the *Unified Network Configurator* manual.

31 Discover the base radio in the Unified Event Manager (UEM). See the *Unified Event Manager* manual.

32 Verify that the base radio is operating properly:

- The Status LED on the front of the transceiver is green.
- Proper operation is confirmed using software tools, such as UEM, and the **Transmitter Metering Screen** in CSS.

9.5

Replacing the Fan Assembly

WARNING: When removing a fan module, avoid contacting moving fan blades before and after removal with tools, hands, or other objects. If removing the fan module to access or replace the modules behind it, turn off the equipment power and allow the modules to cool before performing any work as the surfaces of the modules can be hot.

CAUTION: To prevent overheating, this fan must be in place at all times, except during servicing.

IMPORTANT: The fan assembly can be swapped out without shutting the power off. The replacement fan assembly must be in place within a reasonable amount of time so that the device module does not overheat and shut down.

Figure 97: Fan Assembly

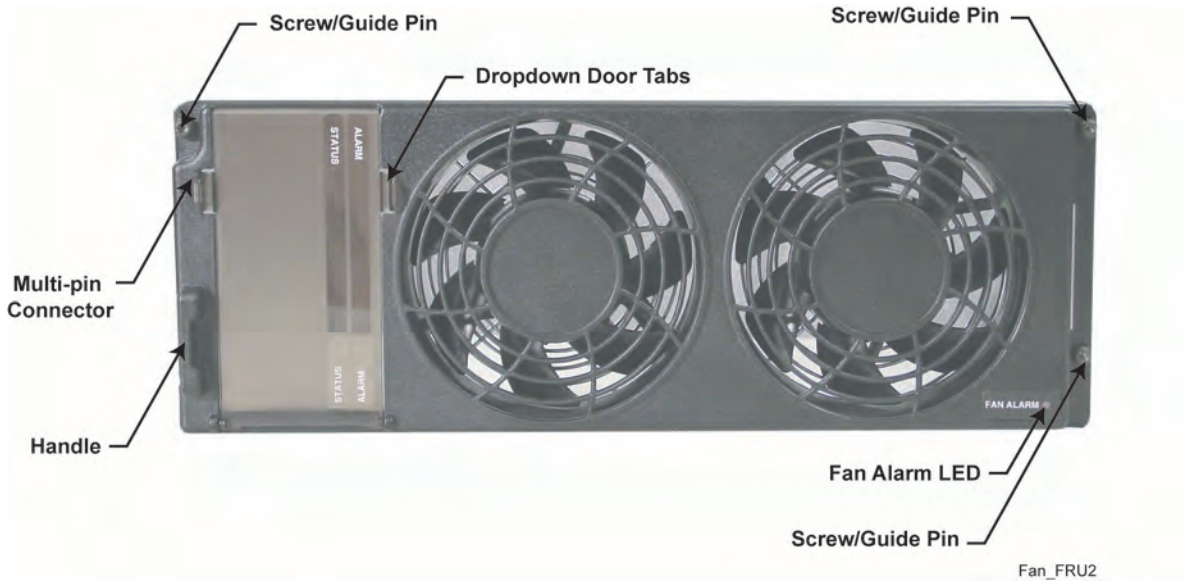

Procedure:

1 Wear an Electrostatic Discharge (ESD) wrist strap and connect its cable to a verified good ground.

CAUTION: Wear the ESD strap throughout this procedure to prevent ESD damage to any components.

2 Using a T20 bit, loosen the three captive screws on the front of the fan assembly to disengage them from the chassis.

3 Using the handle on one end and the edge on the other side, gently pull the fan assembly straight out to disengage the connector.

4 **NOTICE:** All fan modules are delivered from the factory for dual-fan operation. If the base radio is part of a power efficiency package configuration, the DLN6898A fan module must be used and converted for single fan operation. Also, ensure the Tx Power Out in the Configuration/Service Software (CSS) is limited to 50 W.

Convert for single-fan operation as follows:

a Lift the connector harness out of the rubber retainer.

b Disconnect the connector harness.

c Place each connector end into the individual pockets of the rubber retainer.

NOTICE: The DLN6898A fan module can be used in a non-power efficiency package configuration. However, the fan module must be configured for dual-fan operation.

5 Using the guide pins and the connector on the back of the new fan assembly, push the fan assembly into place until it feels secure.

6 Using a T20 bit, tighten the three captive screws on the front of the fan assembly. Torque to 17±2 in-lb.

7 Verify that the fan assembly is operating properly, and the fan Alarm LED is off. You can also use software tools, such as Unified Event Manager (UEM) or CSS to verify the status of the equipment.

9.6 Replacing a Power Supply

WARNING: The power supply module contains dangerous voltages which can cause electrical shock to personnel or damage equipment.

NOTICE: The power supply output is directly mapped to a Power Amplifier (PA)/transceiver combination. Removal of a power supply results in a loss of the associated transmit channel until the replacement power supply is inserted and turned ON.

For a trunked device, place the channel in Service Mode before replacing the module so that the system does not attribute the loss of channel to a failure. Placing a channel into Service Mode is performed using either the Unified Event Manager (UEM) or the Configuration/Service Software (CSS).

Figure 98: Power Supply

Procedure:

1 Wear an Electrostatic discharge (ESD) wrist strap and connect its cable to a verified good ground.

CAUTION: Wear The ESD strap throughout this procedure to prevent ESD damage to any components.

2 For a trunked base radio, place in Service Mode before replacing the module being replaced so the system does not attribute the loss of channel to a failure.

a Connect to the transceiver module Ethernet service port using CSS. See Connecting Through an Ethernet Port Link on page 140.

b From the menu, select **Service** → **Test and Measurement Screen**.

c Click **Change to Service Mode**.

d At the confirmation screen, click **OK**.

The base radio halts activity in the current mode and switches operation to the requested mode.

3 Push the power rocker switch to Off (O) on the power supply unit.

4 Using a T20 bit, loosen the two captive screws on the front of the power supply to disengage them from the chassis.

WARNING: Let the power supply module cool before performing the following step which exposes surfaces of the module that can be hot.

5 Pull on the metal handle to disengage the power supply from the backplane, and remove it completely from the chassis.

6 Slide the replacement power supply into place, pushing gently until it seats.

7 Using a T20 bit, tighten the two captive screws on the front of the power supply.

8 Turn the power button to On (I), and verify that the power supply is operating properly:

- The power supply Status LED is green.
- The power supply Alarm LED is off.

- The power supply Fan LED is off.
- Confirm proper operation using software tools, such as the UEM, and the **Power Supply Metering Screen** in CSS.

9 Place the base radio in Normal Mode, as follows:

a From the menu, select **Service** → **Test and Measurement Screen**.

b Click **Change to Normal Mode**.

c At the confirmation screen, click **OK**.

The base radio halts activity in the current mode and switches operation to the requested mode.

9.7 Replacing a Power Supply Fan

WARNING: The power supply module contains dangerous voltages which can cause electrical shock to personnel or damage equipment.

NOTICE:
Replacing the power supply fan requires removing the power supply module. The power supply output is directly mapped to a Power Amplifier (PA)/transceiver combination. Removal of a power supply results in a loss of the associated channel until the replacement power supply is inserted and turned ON.

Place a trunked device in Service Mode before replacing the module so that the system does not attribute the loss of a channel to a failure. Placing the device in Service Mode is performed using either the Unified Event Manager (UEM) or Configuration/Service Software (CSS).

Figure 99: Power Supply Fan

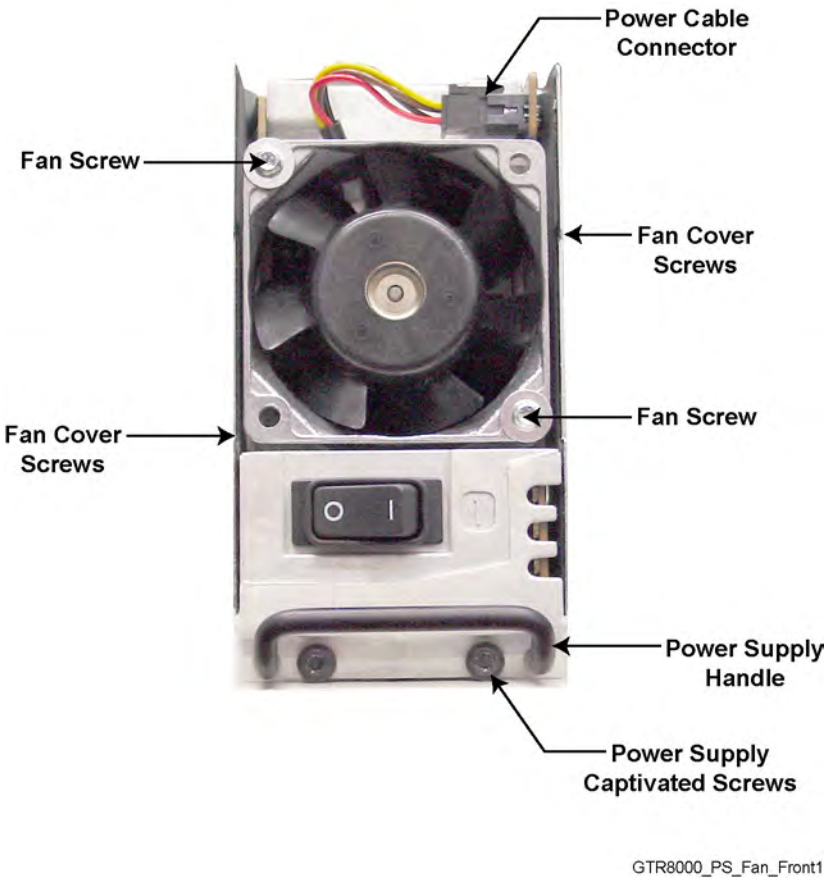

Procedure:

1 Wear an Electrostatic Discharge (ESD) wrist strap and connect its cable to a verified good ground.

CAUTION: Wear the ESD strap throughout this procedure to prevent ESD damage to any components.

2 For a trunked device, place the base radio associated with the power supply fan being replaced in Service Mode.

a Connect to the transceiver module Ethernet service port using CSS. See Connecting Through an Ethernet Port Link on page 140.

b From the menu, select **Service** → **Test and Measurement Screen**.

c Click **Change to Service Mode**.

d At the confirmation screen, click **OK**.

The base radio halts activity in the current mode and switches operation to the requested mode.

3 Set the rocker switch on the front of the power supply to Off (O).

4 Using a T20 bit, loosen the two captive screws on the front of the power supply module to disengage them from the chassis.

WARNING: Let the power supply module cool before performing the next step, which exposes surfaces of the module that can be hot.

5 Pull on the metal handle to disengage the power supply from the backplane, and remove it completely from the chassis.

6 Remove the fan cover from the power supply module:

   a Using a T15 bit, remove the four screws that connect the cover to the sides of the power supply module.

   b Slide the cover off (tilting the top edge out and lifting the bottom edge above the power supply handle).

7 Disconnect the power cable located above the fan.

8 Remove the two screws that secure the fan to the power supply.

9 Remove the fan and insert the new fan.

10 Secure the fan to the power supply with the two screws removed in step 8.

11 Attach the power cable for the fan to the connection on the power supply.

12 Replace the fan cover:

   a Slide the cover on, tilting the bottom edge in, past the power supply handle.

   b Using a T15 bit, insert and tighten the four screws that connect the cover to the sides of the power supply module.

13 Slide the power supply into place, pushing gently until it seats.

14 Using a T20 bit, tighten the two captive screws on the front of the power supply module.

15 Turn the power button to On (I), and verify that the power supply is operating properly:

   - The power supply Status LED is green.
   - The power supply Alarm LED is off.
   - The power supply Fan LED is off and the fan is operating.
   - Proper operation is confirmed using software tools, such as the UEM, and the **Power Supply Metering Screen** in CSS.

16 Place the base radio in Normal Mode, as follows:

   a From the menu, select **Service** → **Test and Measurement Screen**.

   b Click **Change to Normal Mode**.

   c At the confirmation screen, click **OK**.

   The base radio halts activity in the current mode and switches operation to the requested mode.

9.8 Replacing a Power Amplifier

The following figure shows the captive screws that secure the power amplifier module to the chassis in the GTR 8000 Base Radio.

Figure 100: Power Amplifier Module

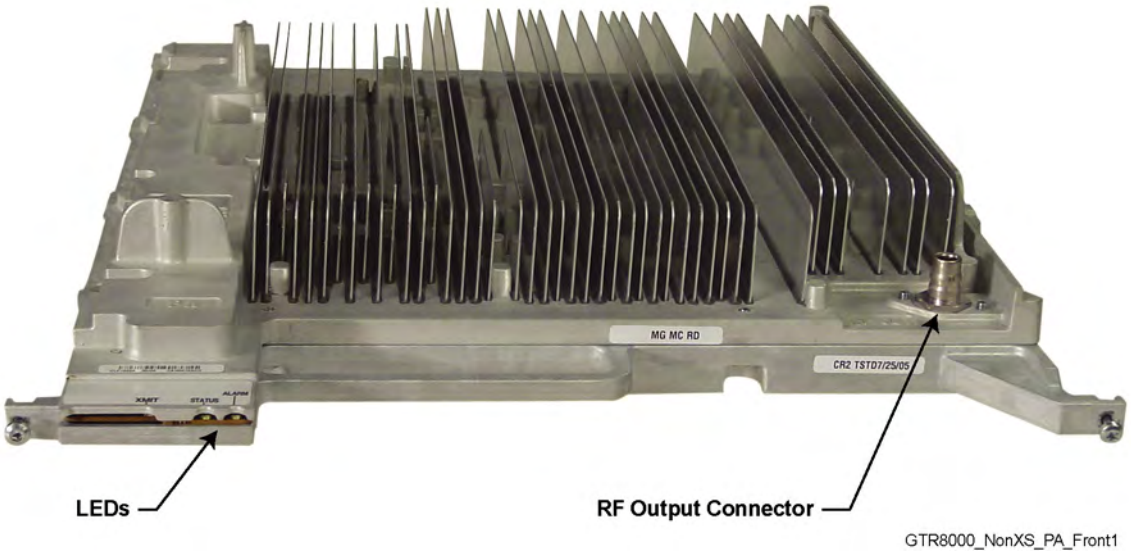

Figure 101: Captive Screws

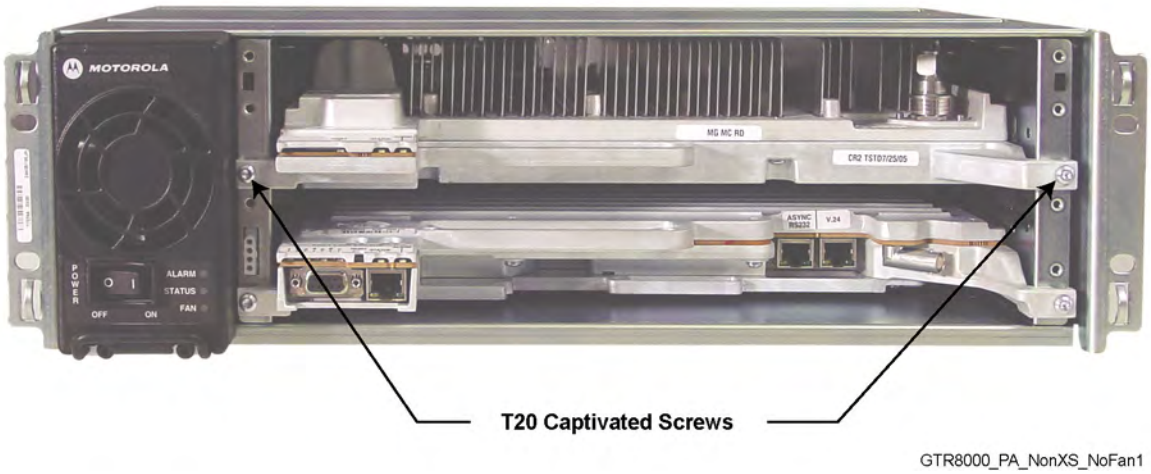

Procedure:

1 Wear an Electrostatic Discharge (ESD) wrist strap and connect its cable to a verified good ground.

CAUTION: Wear the ESD strap throughout this procedure to prevent ESD damage to any components.

2 If the base radio is not operational, go to step 5.

3 Place the base radio associated with the power amplifier module being replaced in Service Mode, so that the system does not attribute the loss of channel to a failure.

a Connect to the transceiver module Ethernet service port using Configuration/Service Software (CSS). See Connecting Through an Ethernet Port Link on page 140.

b From the menu, select **Service** → **Test And Measurement Screen**.

c Click **Change to Service Mode**.

d At the confirmation screen, click **OK**.

The base radio halts activity in the current mode and switches operation to the requested mode.

4 If you choose to turn off the power, set the rocker switch on the front of the associated power supply to the Off (O) position.

NOTICE:
It is not necessary to turn off the power supply for the power amplifier module you are replacing, as the power amplifier modules can be swapped out with the power on.

5 Remove the fan assembly to gain access to the power amplifier module. See Replacing the Fan Assembly on page 237 for instructions on removing the fan assembly.

IMPORTANT: The power amplifier module can be swapped out without shutting the power off. However, minimize the amount of time that the fan is removed, so the circuitry that remains powered on does not overheat and shut down.

CAUTION: Let the power amplifier module cool before performing the following step which exposes surfaces of the module that can be extremely hot.

6 Using a T20 bit, loosen the two captive screws on the front of the power amplifier module to disengage them from the chassis.

7 Remove the RF output QN connector from the front of the power amplifier module, as follows:

a Pull the power amplifier out of the chassis far enough so that the QN (quick-N) RF output connector is accessible.

b Disconnect the cable from the power amplifier.

Figure 102: GTR 8000 Power Amplifier RF Cable (Front)

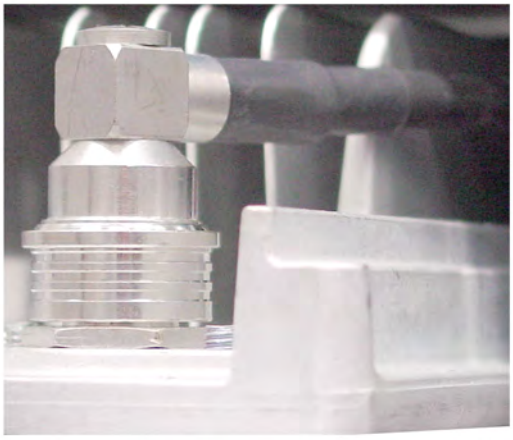

GTR8000_XCVR_RFCable_On

8 Using the handle, gently pull the power amplifier module straight out, along the guides on which it sits.

9 Reconnect the RF cable to the RF output QN connector on the front of the power amplifier module, as follows:

a While holding the RF cable, slide in the replacement power amplifier module along the guiding rails until the RF cable connector can reach the RF connection on the front of the module.

b Push the RF cables connector on to the module connector until it snaps securely into place.

10 Slide in the replacement power amplifier module until it engages with the backplane. A slight push may be needed to securely engage the module.

IMPORTANT: If the power amplifier module stops well before it is engaged, it is in an incorrect position. Either it is in the wrong slot or it is rotated 180 °.

11 Using a T20 bit, tighten the two captive screws on the front of the module to secure the power amplifier module to the chassis.

12 Reinstall the fan unit. See Replacing the Fan Assembly on page 237.

NOTICE: If you chose to turn off the power, set the rocker switch on the front of the associated power supply to the On (I) position.

13 Verify that the power amplifier is operating properly:

- The power amplifier Status and Transmit LEDs are green.
- The Alarm LED is off.
- Proper operation is confirmed using software tools, such as Unified Event Manager (UEM) or the **Transmitter Metering Screen** in CSS.

14 Place the base radio in Normal Mode, as follows:

a From the menu, select **Service** → **Test and Measurement Screen**.

b Click **Change to Normal Mode**.

c At the confirmation screen, click **OK**.

The base radio halts activity in the current mode and switches operation to the requested mode.

9.9

Replacing a GTR 8000 Base Radio Backplane

In a GTR 8000 Base Radio, the backplane is the circuit board at the rear of the card cage which connects the power supply, transceiver, and power amplifier. Figure 103: GTR 8000 Base Radio Showing Connections to Backplane Through Backplane Cover on page 245 shows the metal cover that must be removed to access the backplane. See GTR 8000 Base Radio Rear Connections (Integrated Voice and Data) on page 105 and GTR 8000 Base Radio Rear Connections (HPD) on page 108 for the ports and cables that must be disconnected to remove the cover.

Figure 103: GTR 8000 Base Radio Showing Connections to Backplane Through Backplane Cover

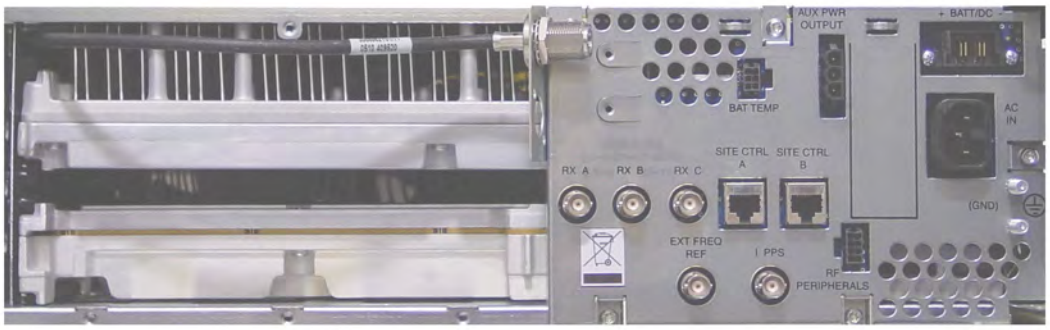

GTR8000_base_radio_rear

Prerequisites: The procedure assumes the following service access clearances:

- At least 60.96 cm (2 ft) access at the rear of the rack, or
- At least 60.96 cm (2 ft) access on one side of the rack, and at least 6 inches at the rear of the rack

Procedure:

1. Wear an Electrostatic Discharge (ESD) strap and connect its cable to a verified good ground.

   CAUTION: Wear the ESD strap throughout this procedure to prevent ESD damage to any components.

2. If the base radio is not operational, go to step 4.
3. Place the base radio in Service Mode, so the system does not attribute the loss of channel to a failure:
   a. Connect to the transceiver Ethernet service port using Configuration/Service Software (CSS). See Connecting Through an Ethernet Port Link on page 140.
   b. From the menu, select **Service** → **Test and Measurement Screen**.
   c. Click **Change to Service Mode**.
   d. At the confirmation screen, click **OK**.

      The base radio halts activity in the current mode and switches operation to the requested mode.
4. Push the power rocker switch power supply unit to Off (O).
5. Label and disconnect all cables from the base radio backplane.

   NOTICE: An RF output cable from the power amplifier connects through a metal bulkhead to the left of the backplane. This cable does not need to be disconnected. However, to access the backplane screw behind the metal bulkhead, using a T20 bit, remove the two screws securing the bulkhead to the inner chassis at the left of the backplane.
6. Label then disconnect all cables from the front ports on the transceiver.
7. Remove the power supply module from the chassis as follows:
   a. Using a T20 bit, loosen the two captive screws on the front of the power supply to disengage them from the chassis.

      WARNING: Let the power supply module cool before performing the following step which exposes surfaces of the module that can be extremely hot.
   b. Pull on the metal handle to disengage the power supply module from the backplane, and remove it completely from the chassis.
8. Remove the fan assembly to gain access to the transceiver and power amplifier modules. See Replacing the Fan Assembly on page 237.
9. Disengage the transceiver module and the power amplifier from the backplane as follows:
   a. Using a T20 bit, loosen the two captive screws on the front of each module, so they disengage from the chassis.

      WARNING: Let the power amplifier module cool before performing the following step which exposes surfaces of the module that can be extremely hot.
   b. Using the handles, gently pull the modules until the modules disengage from the backplane.
10. Using a T20 bit, remove the screw that secures the tab on the right Electromagnetic Interference (EMI) spring panel. See Figure 105: EMI Spring Panel Guide Rail Alignment on page 249.

    NOTICE: Removing the left EMI spring panel is operational.

11 Carefully slide the EMI spring panel forward, noting how the panel is affixed onto the power supply guide rail. The panel does not need to be completely removed.

12 Remove the fan cable from the backplane, from the front of the chassis, with the backplane still secured to the chassis, as follows:

- **a** Follow the fan cable with your hand from its connector at the front of the chassis to its connection to the backplane, through the card cage section from where the power supply module was removed.
- **b** Remove the fan cable multi-pin connector from the backplane by squeezing the top and bottom of the connector and pulling the connector straight out from the backplane.

13 Using a T20 bit, remove the five screws that secure the metal backplane cover and the backplane circuit board to the rear of the chassis.

14 Remove the metal backplane cover and the backplane circuit board.

15 Place the new backplane circuit board in the same location and orientation as the one removed.

16 **IMPORTANT:** Start threading all five screws into the backplane circuit board and backplane cover before they are fully seated and secured.

Secure the new backplane circuit board and the backplane cover to the rear of the base radio chassis with the five screws removed in step 13. Torque to 18+/-2 in-lb.

17 Reinstall the metal bulkhead that holds the RF output cable from the power amplifier, using the two screws removed in step 5 to secure it to the inner chassis at the left of the backplane.

18 Connect the fan cable to the new backplane, from the front of the chassis, with the backplane secured to the chassis, as follows:

- **a** Locate the port in the new backplane for the fan cable multi-pin connector.
- **b** Follow the fan cable with your hand from its connector at the front of the chassis to the connector at the other end of the cable.
- **c** Push the fan cables multi-pin connector, with the tab up, into the correct location in the backplane.

Figure 104: Fan Cable Connector

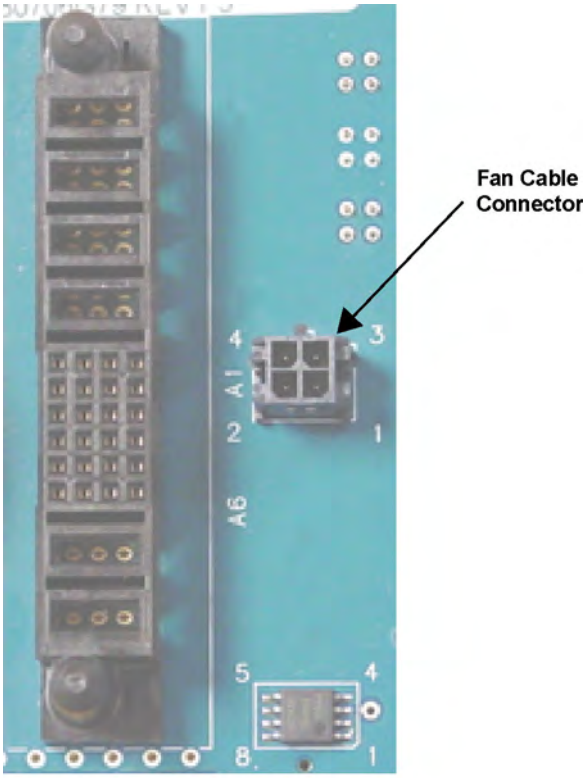

GTR_GCP_Fan_Cable_Connector

19 Slide the EMI spring panel back into the cabinet. Ensure that the offset tabs on the panel are to the right (inside) of the power supply guide rail, so that the panel does not catch on the fan cable.

Figure 105: EMI Spring Panel Guide Rail Alignment

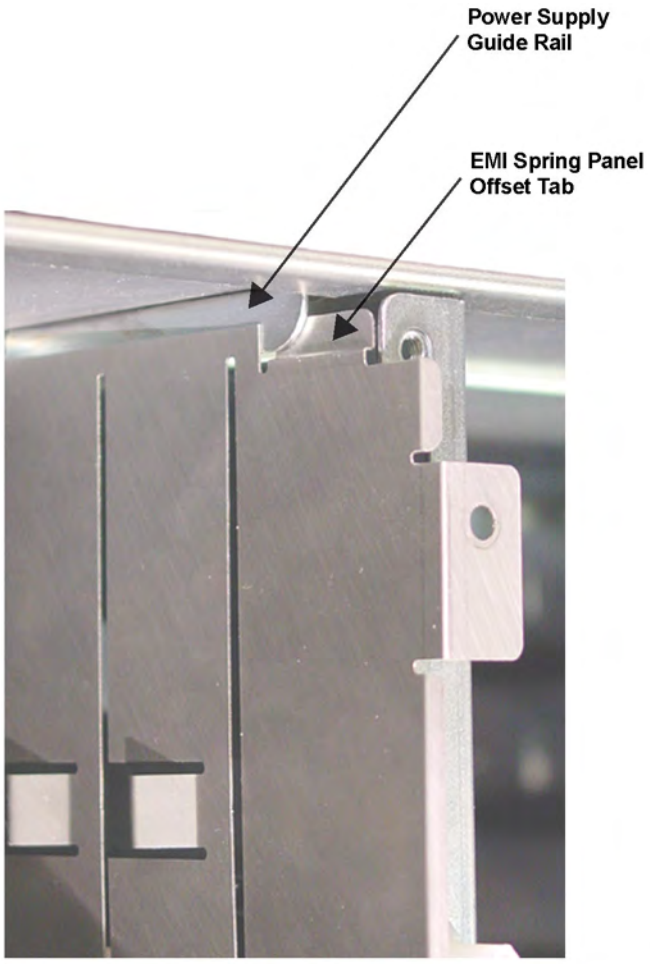

GTR_GCP_EMI_panel_alignment

20 Using a T20 bit, reinstall the screw into the EMI spring panel tab.

21 Slide the transceiver and power amplifier modules into the new backplane. A slight push may be needed to fully engage the modules.

22 Reconnect all cables to the front ports on the transceiver, if applicable.

23 Using a T20 bit, secure the transceiver and power amplifier modules to the chassis with the two captive screws on the front of each module.

24 Reinstall the fan assembly. See Replacing the Fan Assembly on page 237.

25 Slide the power supply into the chassis, pushing gently until it securely seats in the new backplane.

NOTICE: If the power supply does not seat properly, remove it and adjust the EMI spring panel properly against the mounting flange.

26 Using a T20 bit, tighten the two captive screws on the front of the power supply.

27 Reconnect all cables at the rear of the base radio.

28 Set the power supply rocker switch to On (I).

29 Verify that the LEDs indicate the modules you removed and reinstalled are operational:

- The Status LEDs are green.
- The Alarm LEDs are off.
- The power supply Fan LED is off.

30 Place the base radio in Normal Mode, as follows:

a From the menu, select **Service** → **Test and Measurement Screen**.

b Click **Change to Normal Mode**.

c At the confirmation screen, click **OK**.

The base radio halts activity in the current mode and switches operation to the requested mode.

31 Re-configure the Security Settings into the Backplane. See Setting the Serial Security Services in CSS on page 138.

32 Verify proper operation using software tools, including:

- Unified Event Manager (UEM)
- CSS

9.10 Replacing a Preselector Filter

Figure 106: Preselector Filter (700/800 MHz)

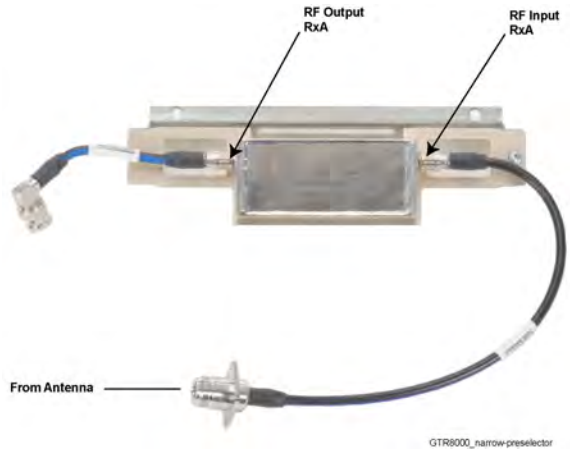

Figure 107: Preselector Filter (UHF)

Figure 108: Preselector Filter (VHF)

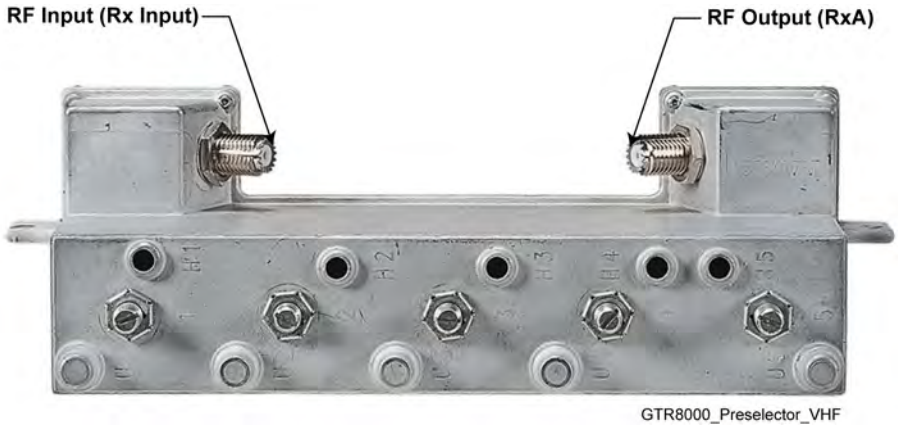

IMPORTANT: You can replace a preselector filter without shutting the power down.

Procedure:

1. Wear an Electrostatic Discharge (ESD) strap and connect its cable to a verified good ground.

   CAUTION: Wear the ESD strap throughout this procedure to prevent ESD damage to any components.

2. Remove the preselector from the base radio as follows:
   - **a** Using T20 bit, remove the two screws which secure the preselector to the flange of the base radio .
   - **b** Label and disconnect the left and right QMA cables from the front of the preselector.
3. Install the preselector to the base radio as follows:
   - **a** Using T20 bit, secure the slide rail to the base radio flange using the two screws removed in step 2a.
   - **b** Reconnect the left and right QMA cables to the preselector.
   - **c** Tune the preselector. See Tuning a Preselector on page 159.
4. Verify that the system is operating properly using fault management software, including:
   - Unified Event Manager (UEM).
   - **Transmitter Metering Screen** in Configuration/Service Software (CSS).

9.11 Replacing Transmit Filters (700/800 MHz)

The following figure shows the transmit filter installed on a tray.

Figure 109: Transmit Filter (700/800 MHz)

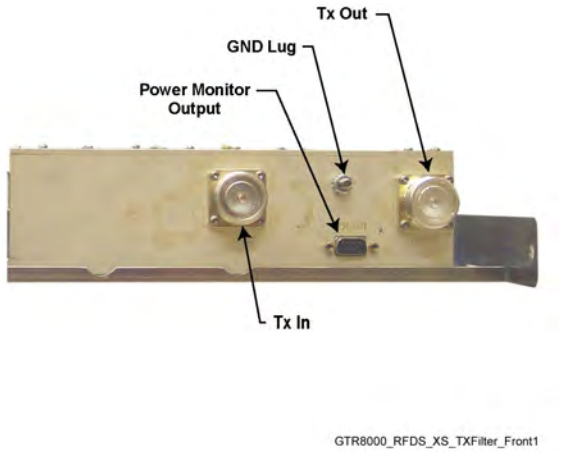

WARNING: Shock hazard. The GTR 8000 Base Radio contains dangerous voltages which can cause severe electrical shock to personnel or damage to equipment. Set the rocker switches on the front of the associated power supplies to the off position before servicing this component in the base radio.

IMPORTANT: When using this procedure to replace or remove the transmit filter, the preceding **WARNING** applies and the site must be powered down before starting the replacement procedure if the entire site is connected to the transmit filter being removed. Powering down the site causes any affiliated subscribers to relocate to another channel at an adjacent site. Disable the channels before powering down so that the system does not attribute the loss of channel to a failure. Disable a channel using either the Unified Event Manager (UEM) or Configuration/ Service Software (CSS).

Procedure:

1. Wear an Electrostatic Discharge (ESD) wrist strap and connect its cable to a verified good ground.

   CAUTION: Wear the ESD strap throughout this procedure to prevent ESD damage to any components.

2. At the site, place all base radios in Service Mode that are using the transmit filter module being replaced.
   - **a** Connect to transceiver module Ethernet service port. See Connecting Through an Ethernet Port Link on page 140.
   - **b** From the menu, select **Service** → **Test and Measurement Screen**.
   - **c** Click **Change to Service Mode**.
   - **d** At the confirmation screen, click **OK**.

     The base radio halts activity in the current mode and switches operation to the requested mode.

3. Set the rocker switches on the front of the power supplies to the OFF (O) position.
4. Remove the transmit filter tray from the rack as follows:
   - **a** Label and disconnect the Tx input, antenna output, and ground cables from the transmit filter.
   - **b** Using a T30 bit, remove the two screws which secure the tray to the rack.
   - **c** Slide the tray out the front of the rack.

5. Using a T20 bit, remove the transmit filter from the tray by removing the screws that attach it to the tray.
6. Install the new transmit filter in the tray as follows:
   a. Place the new transmit filter in the tray in the same location and orientation as the module that you removed.
   b. Using a T20 bit, secure the replacement transmit filter to the tray using the screws removed in step 5.
7. Re-install the transmit filter tray in the rack as follows:
   a. Slide the tray in the front of the rack.
   b. Using a T30 bit, secure the tray to the rack with the two screws removed in step 4b.
   c. Reconnect the Tx input, Antenna output, and ground cables to the transmit filter.
8. Set the rocker switches on the front of the power supplies to the ON (I) position.
9. Place each base radio in Normal Mode, as follows:
   a. From the menu, select **Service** → **Test and Measurement Screen**.
   b. Click **Change to Normal Mode**.
   c. At the confirmation screen, click **OK**.

      The base radio halts activity in the current mode and switches operation to the requested mode.

9.12 Replacing the Dual Circulator/Isolator Modules

For a GTR 8000 Base Radio, the following Radio Frequency Distribution System (RFDS) modules are assembled in a tray:

- External Dual Circulator/Isolator
- Circulator Load (a module connected directly to the External Dual Circulator module)
- Low Pass/Harmonic Filter

Figure 110: External Dual Circulator/Isolator Tray (700/800 MHz) on page 254 and Figure 111: External Dual Circulator/Isolator Tray (UHF) on page 255 show these modules installed on a tray.

Figure 110: External Dual Circulator/Isolator Tray (700/800 MHz)

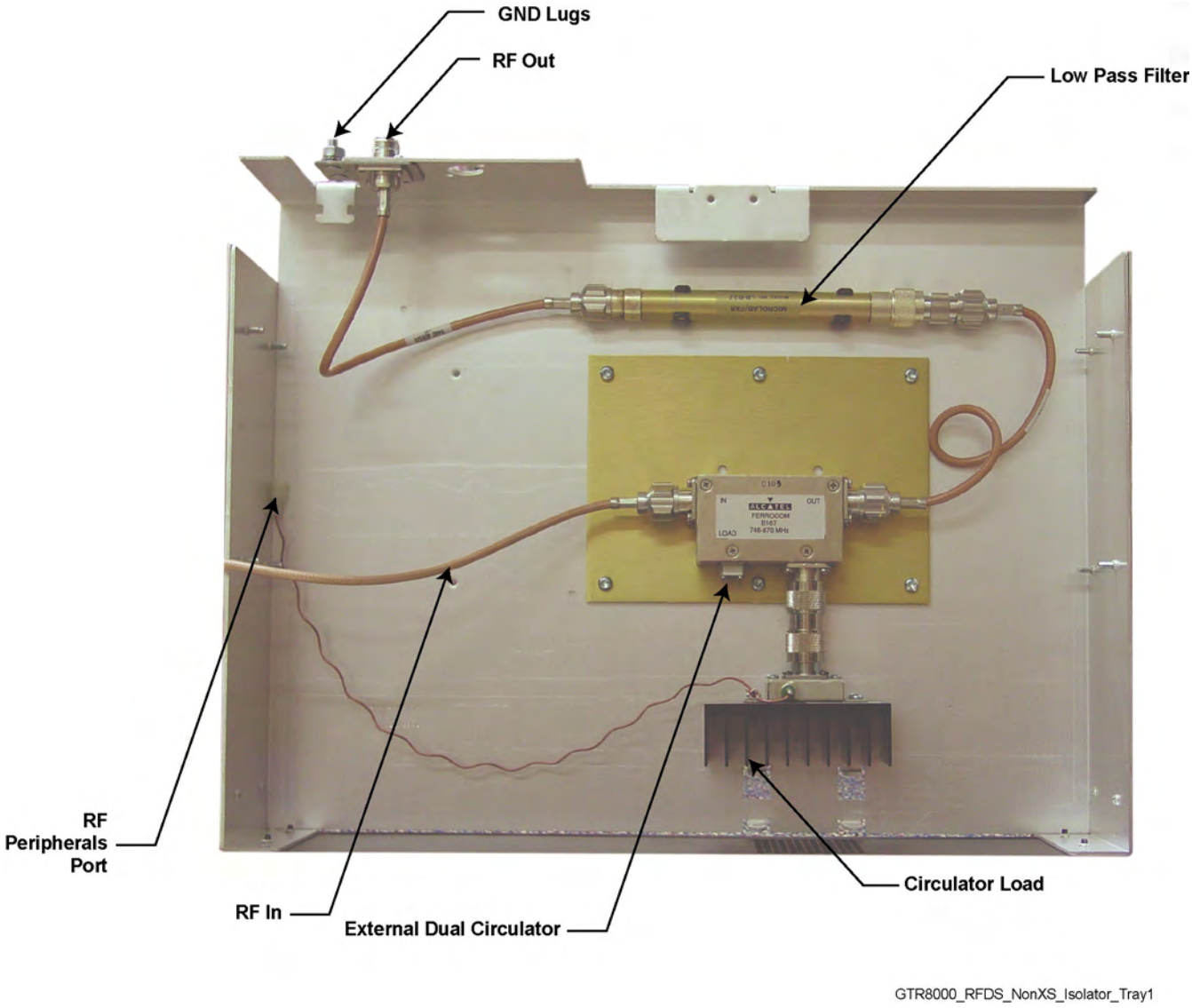

Figure 111: External Dual Circulator/Isolator Tray (UHF)

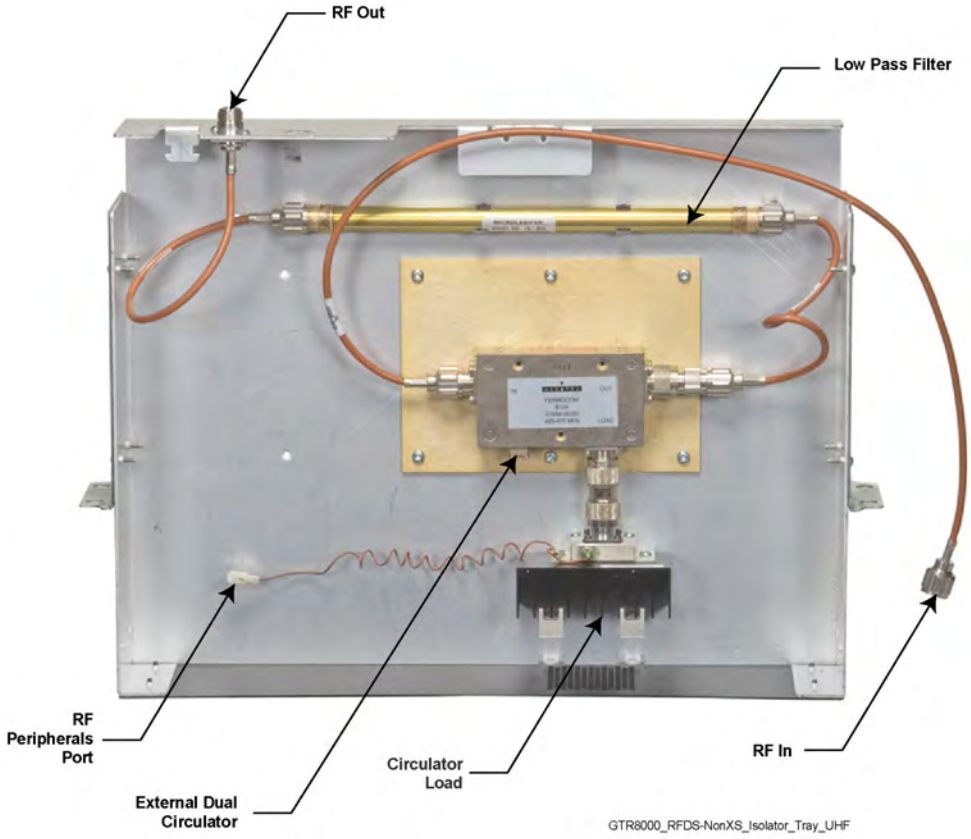

These modules can be replaced individually, or if ordered together, you may receive the modules already secured to a tray.

WARNING: Shock hazard. The GTR 8000 Base Radio contains dangerous voltages which can cause electrical shock to personnel or damage to equipment. Set the power supply switches for the affected equipment to the Off (O) position when servicing this component in the system.

IMPORTANT: Powering down the base radio causes any affiliated subscribers to relocate to another channel at the site or another channel at an adjacent site. Place the base radios in Service Mode before powering down so that the system does not attribute the loss of channel to a failure. Placing a base radio in Service Mode is performed using either Unified Event Manager (UEM) or Configuration/Service Software (CSS).

Procedure:

1. Wear an Electrostatic Discharge (ESD) strap and connect its cable to a verified good ground.

   CAUTION: Wear the ESD strap throughout this procedure to prevent ESD damage to any components.

2. Place the base radio in Service Mode, as follows:
   - **a** Connect to the transceiver module Ethernet service port using CSS. See Connecting Through an Ethernet Port Link on page 140.
   - **b** From the menu, select **Service** → **Test and Measurement Screen**.
   - **c** Click **Change to Service Mode**.

d At the confirmation screen, click **OK**.

The base radio halts activity in the current mode and switches operation to the requested mode.

3 Set the rocker switch on the front of the power supply to the Off (O) position.

4 Remove the filter tray from the rack as follows:

a Label and disconnect the RF input, RF output, and ground cables from the tray.

b Disconnect the Circulator Load temperature cable at the inline connector (which disconnects it from the cable leading to the RF Peripherals port on the base radio backplane).

c Using a T30 bit, remove the two screws which secure the tray to the rack.

d Slide the tray out the front of the rack.

5 Perform one of the following actions:

If…	Then…
If you are replacing an individual External Dual Circulator/Isolator module,	perform the following actions: **a** Label and disconnect the RF input and RF output cables from the External Dual Circulator module. **b** Unscrew the connector that secures the Circulator Load to the External Dual Circulator module. **c** Remove the screws that secure the circulator baseplate to the tray. **d** Remove the circulator module including the circulator load module that extends beyond the baseplate. **e** Place the new External Dual Circulator module in the tray in the same location and orientation as the module you are replacing. **f** Secure the new External Dual Circulator module baseplate to the tray using the screws previously removed. **g** Connect the RF input and RF output cables to the new External Dual Circulator module. **h** Connect the Circulator Load to the External Dual Circulator module. **i** Go to step 6 using the existing tray.
If you are replacing an individual Circulator Load,	perform the following actions: **a** Unscrew the connector that secures the Circulator Load to the External Dual Circulator module. **b** Remove the Circulator Load module. **c** Place the new Circulator Load module on the tray in the same position and orientation as the module you removed. **d** Secure the new Circulator Load to the External Dual Circulator module by tightening the connector. **e** Connect the Circulator load cable to the RF Peripherals port on the base radio backplane. **f** Go to step 6 using the existing tray.
If you are replacing an individual	perform the following actions:

If…	Then…
Low Pass/ Harmonic Filter module,	**a** Label and disconnect the RF input and RF output cables from the Low Pass/Harmonic Filter module. **b** Pull up firmly to release the Low Pass Filter module from the two semi-circular clips holding it in place. **c** Insert the new Low Pass Filter module into the semi-circular clips using the same orientation as the module you are replacing. **d** Connect the RF input and RF output cables to the new Low Pass/ Harmonic Filter module. **e** Go to step 6 using the existing tray.
If you are replacing the entire tray including all of its modules,	go to step 6 using the replacement tray.

6 Install the tray in the rack as follows:

a Slide the tray into the appropriate location through the front of the rack.

b Using a T30 bit, secure the slide rail to the rack using the two screws removed in step 4 c.

c Reconnect the RF input, RF output, and ground cables.

d Reconnect the Circulator Load temperature cable at the inline connector (which connects it to the cable leading to the RF Peripherals port on the base radio backplane).

7 Set the rocker switch on the front of the power supply to the On (I) position.

8 Place the base radio in Normal Mode, as follows:

a From the menu, select **Service** → **Test and Measurement Screen**.

b Click **Change to Normal Mode**.

c At the confirmation screen, click **OK**.

The base radio halts activity in the current mode and switches operation to the requested mode.

9 Verify that the base radio is operating properly using fault management software, including:

- UEM
- The **Transmitter Metering Screen** in CSS

9.13

Replacing a Duplexer (700/800 MHz)

The following figure shows the duplexer installed on a tray.

Figure 112: Duplexer Module (700/800 MHz)

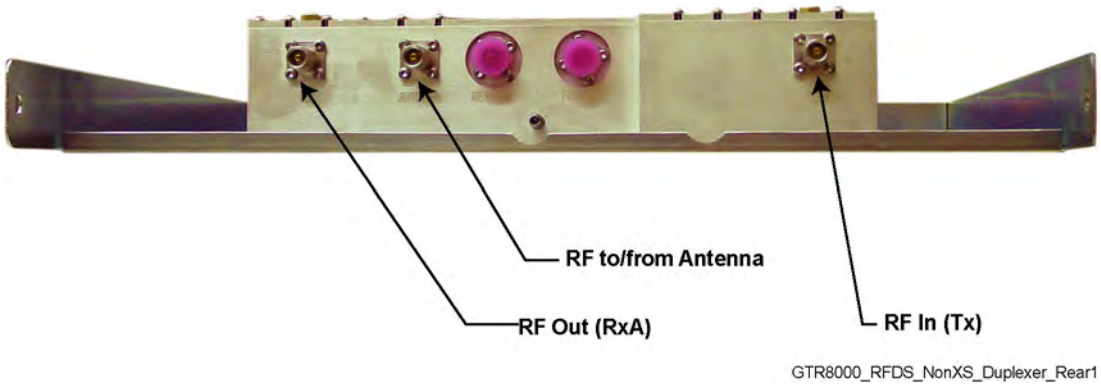

WARNING: Shock hazard. The GTR 8000 Base Radio contains dangerous voltages which can cause electrical shock to personnel or damage to equipment. Set the power supply switches for the affected equipment to the Off (O) position when servicing this component in the base radio.

IMPORTANT: Powering down the base radio causes any affiliated subscribers to relocate to another channel at the site or another channel at an adjacent site. Place the base radio in Service Mode before powering down so that the system does not attribute the loss of channel to a failure. Placing a base radio in Service Mode is performed using either the Unified Event Manager (UEM) or Configuration/Service Software (CSS).

Procedure:

1. Wear an Electrostatic Discharge (ESD) wrist strap and connect its cable to a verified good ground.

   CAUTION: Wear the ESD strap throughout this procedure to prevent ESD damage to any components.

2. Place the base radio with the duplexer module being replaced in Service Mode, as follows:
   - **a** Connect to the device modules Ethernet service port using CSS. See Connecting Through an Ethernet Port Link on page 140.
   - **b** From the menu, select **Service** → **Test and Measurement Screen**.
   - **c** Click **Change to Service Mode**.
   - **d** At the confirmation screen, click **OK**.

     The base radio halts activity in the current mode and switches operation to the requested mode.

3. Set the rocker switch on the front of the power supply to the Off (O) position.
4. Remove the duplexer tray from the rack as follows:
   - **a** Label and disconnect the Rx output, Tx input, antenna output, and ground cables from the duplexer.
   - **b** Using a T30 bit, remove the two screws which secure the tray to the rack.
   - **c** Slide the tray out the front of the rack.
5. Using a T20 bit, remove the duplexer from the tray by removing the screws that attach it to the tray.
6. Install the new duplexer in the tray, as follows:
   - **a** Place the new duplexer in the tray in the same location and orientation as the module that you removed.

b Using the T20 bit, secure the replacement duplexer to the tray using the screws removed in step 5.

7 Re-install the duplexer tray in the rack as follows:

a Slide the tray in the front of the rack.

b Using a T30 bit, secure the tray to the rack with the two screws removed in step 4 b.

c Reconnect the Rx output, Tx input, Antenna output, and ground cables to the duplexer.

8 Set the rocker switch on the front of the power supply to the On (I) position.

9 Place the base radio in Normal Mode, as follows:

a From the menu, select **Service** → **Test and Measurement Screen**.

b Click **Change to Normal Mode**.

c At the confirmation screen, click **OK**.

The base radio halts activity in the current mode and switches operation to the requested mode.

9.14 Replacing a Duplexer (UHF)

Figure 113: Duplexer Module (UHF)

WARNING: Shock hazard. The GTR 8000 Base Radio contains dangerous voltages which can cause electrical shock to personnel or damage to equipment. Set the power supply switches for the affected equipment to the Off (O) position when servicing this component in the base radio.

IMPORTANT: Powering down the base radio causes any affiliated subscribers to relocate to another channel at the site or another channel at an adjacent site. Place the base radio in Service Mode before powering down, so that the system does not attribute the loss of a channel to a failure. Placing a base radio in Service Mode is performed using either the Unified Event Manager (UEM) or Configuration/Service Software (CSS).

Procedure:

1. Wear an Electrostatic Discharge (ESD) wrist strap and connect its cable to a verified good ground.

   CAUTION: Wear the ESD strap throughout this procedure to prevent ESD damage to any components.

2. Place the base radio with the duplexer module being replaced in Service Mode, as follows:
   - **a** Connect to the device modules Ethernet service port using CSS. See Connecting Through an Ethernet Port Link on page 140.
   - **b** From the menu, select **Service** → **Test and Measurement Screen**.
   - **c** Click **Change to Service Mode**.
   - **d** At the confirmation screen, click **OK**.

     The base radio halts activity in the current mode and switches operation to the requested mode.
3. Set the rocker switch on the front of the power supply to the Off (O) position.
4. Remove the duplexer from the base radio, as follows:
   - **a** Label and disconnect the LO Side Frequency, High Side Frequency, antenna output, and ground cables from the duplexer.
   - **b** Using a T20 bit, remove the four screws which secure the duplexer to the rack.
5. Install the duplexer to the rack as follows:
   - **a** Using a T20 bit, secure the duplexer to the rack using the four screws removed in step 4b.
   - **b** Reconnect the LO Side Frequency, High Side Frequency, antenna output, and ground cables from the duplexer.
6. Set the rocker switch on the front of the power supply to the On (I) position.
7. Place the base radio in Normal Mode, as follows:
   - **a** From the menu, select **Service** → **Test and Measurement Screen**.
   - **b** Click **Change to Normal Mode**.
   - **c** At the confirmation screen, click **OK**.

     The base radio halts activity in the current mode and switches operation to the requested mode.

9.15

Replacing a Duplexer (VHF)

Figure 114: Duplexer Module for IVD (VHF)

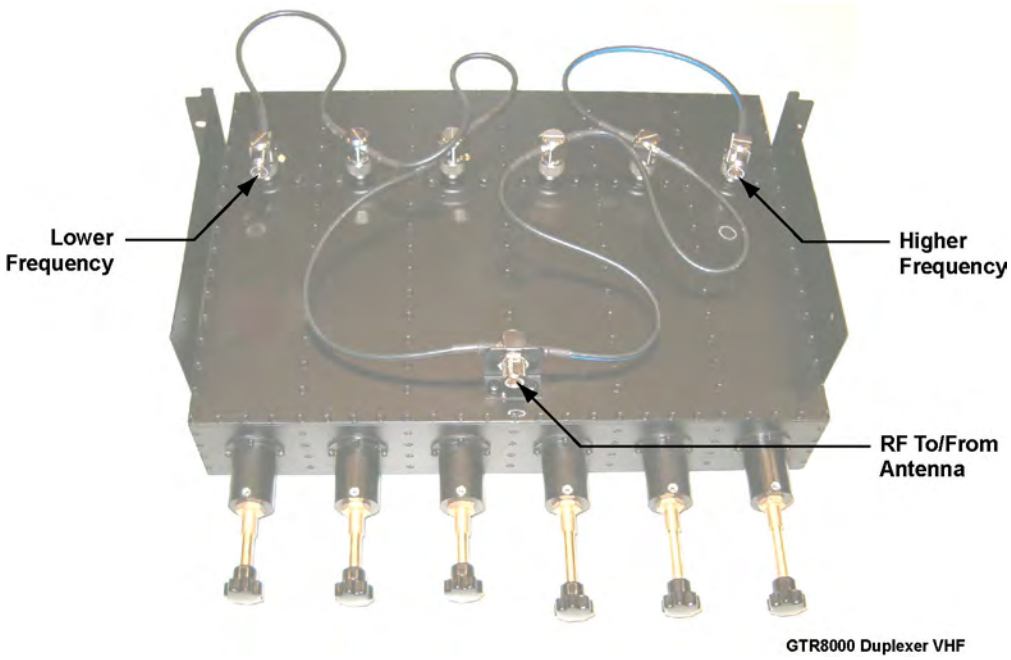

WARNING: Shock hazard. The GTR 8000 Base Radio contains dangerous voltages which can cause electrical shock to personnel or damage to equipment. Set the power supply switches for the affected equipment to the Off (O) position when servicing this component in the base radio.

IMPORTANT: Powering down the base radio causes any affiliated subscribers to relocate to another channel at the site or another channel at an adjacent site. Place the base radio in Service Mode before powering down so the system does not attribute the loss of channel to a failure. Placing a base radio in Service Mode is performed using either the Unified Event Manager (UEM) or Configuration/Service Software (CSS).

Procedure:

1. Wear an Electrostatic Discharge (ESD) wrist strap and connect its cable to a verified good ground.

   CAUTION: Wear the ESD strap throughout this procedure to prevent ESD damage to any components.

2. Place the base radio with the duplexer module being replaced in Service Mode, as follows:
   - **a** Connect to the transceiver module Ethernet service port using CSS. See Connecting Through an Ethernet Port Link on page 140.
   - **b** From the menu, select **Service** → **Test and Measurement Screen**.
   - **c** Click **Change to Service Mode**.
   - **d** At the confirmation screen, click **OK**.

     The base radio halts activity in the current mode and switches operation to the requested mode.

3. Set the rocker switch on the front of the power supply to the Off (O) position.
4. Remove the duplexer from the base radio as follows:

a Label and disconnect the Rx output, Tx input, antenna output, and ground cables from the duplexer.

b Using a T20 bit, remove the four screws which secure the duplexer to the rack.

5 Install the duplexer to the rack as follows:

a Using a T20 bit, secure the duplexer to the rack using the four screws removed in step step 4 b.

b Reconnect the Rx output, Tx input, antenna output, and ground cables from the duplexer.

6 Set the rocker switch on the front of the power supply to the On (I) position.

7 Place the base radio in Normal Mode, as follows:

a From the menu, select **Service** → **Test and Measurement Screen**.

b Click **Change to Normal Mode**.

c At the confirmation screen, click **OK**.

The base radio halts activity in the current mode and switches operation to the requested mode.

9.16 Replacing an Antenna Relay

WARNING: Shock hazard. The GTR 8000 Base Radio contains dangerous voltages which can cause electrical shock to personnel or damage to equipment. Set the power supply switches for the affected equipment to the Off (O) position when servicing this component in the base radio.

IMPORTANT: Powering down the base radio causes any affiliated subscribers to relocate to another channel at the site or another channel at an adjacent site. Place the base radio in Service Mode before powering down so that the system does not attribute the loss of channel to a failure. Placing a base radio in Service Mode is performed using either the Unified Event Manager (UEM) or Configuration/Service Software (CSS).

Procedure:

1 Wear an Electrostatic Discharge (ESD) wrist strap and connect its cable to a verified good ground.

CAUTION: Wear the ESD strap throughout this procedure to prevent ESD damage to any components.

2 Place the base radio in Service Mode, as follows:

a Connect to the device modules Ethernet service port using CSS. See Connecting Through an Ethernet Port Link on page 140.

b From the menu, select **Service** → **Test and Measurement Screen**.

c Click **Change to Service Mode**.

d At the confirmation screen, click **OK**.

The base radio halts activity in the current mode and switches operation to the requested mode.

3 Set the rocker switch on the front of the power supply to the Off (O) position.

4 Remove the antenna relay from the base radio, as follows:

a Mark all cables and remove. RX (NC) position, TX (NO) position, Antenna (C) connection position, and power connection position.

b Using a T15 bit, remove the two screws holding the antenna relay to the backplane cover and remove the antenna relay.

5 Replace the antenna relay to the base radio, as follows:

a Using a T15 bit, attach the new antenna relay using the screws removed in step 4b, and torque to 15 in-lb.

b Attach all cables and tighten the coax connectors.

6 Set the rocker switch on the front of the power supply to the On (I) position.

7 Place the base radio in Normal Mode, as follows:

a From the menu, select **Service** → **Test and Measurement Screen**.

b Click **Change to Normal Mode**.

c At the confirmation screen, click **OK**.

The base radio halts activity in the current mode and switches operation to the requested mode.

Chapter 10

GTR 8000 Base Radio Reference

Reference information for GTR 8000 Base Radios and subsystems includes LED states and specifications for individual GTR 8000 Base Radio RFDS modules.

This chapter contains supplemental reference information relating to GTR 8000 Base Radio.

10.1 GTR 8000 Base Radio LEDs

Many of the LEDs on the GTR 8000 Base Radio provide an indication for one or more the following conditions:

Lamp Test
The Lamp Test state verifies that the indicators are operational. For Lamp Test, the LEDs stay in this state for a second or less.

Failure
A failure has occurred that can be fixed only through replacement. If a reason other than a hardware fault is causing the state, Impaired is noted.

Impaired
The device is not fully operational due to internal or external causes. Some corrective action must be taken to get back to 100% operation.

Booting Up
The device is not in service due to running of diagnostics or initializing.

Online
The device is fully operational.

The LEDs for the transceiver and power amplifier modules can be viewed through the door next to the fans with the door opened or closed.

10.1.1 GTR 8000 Base Radio Transceiver LEDs

Figure 115: Transceiver LEDs (viewable through a drop-down door)

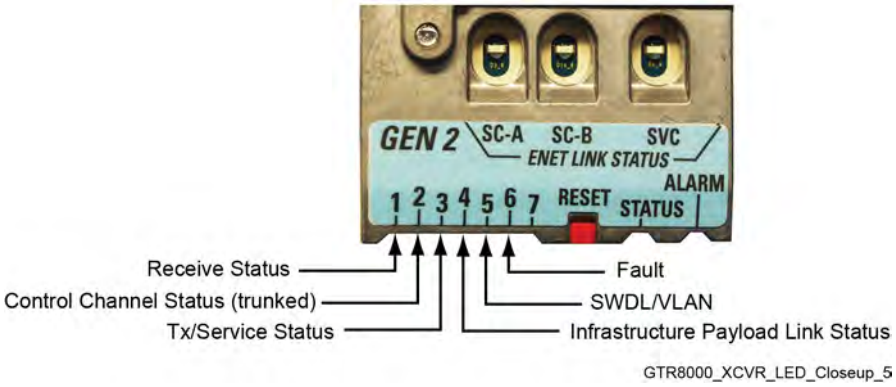

10.1.1.1
Transceiver Status and Alarm LEDs

The Status LED is green, and the Alarm LED is red. These LEDs are either off, on, or blinking depending on the condition of the transceiver.

Table 61: Transceiver Status and Alarm LEDs

Condition	Green (Status LED)	Red (Alarm LED)
No Power	Off	Off
Lamp Test (During Test)	On	On
Impaired Operation	On	Blinking
Critical Failure	Off	On
Booting Up	Blinking	Off
Operational	On	Off

For detailed information on current operation and fault status, use the Configuration/Service Software (CSS) **Status Panel** screen.

10.1.1.2
Transceiver Ethernet Link Status LEDs

The following LEDs indicate Ethernet link and status connections between the transceiver, LAN, and the front panel service port.

Table 62: Transceiver Ethernet Link Status LEDs

LED Name	Indication	LED Status
ENET SC-A (external connection to SITE CTRL A on the rear of the chassis)	Ethernet link inactive (Remote PHY/MAC not detected.)	Off
	Ethernet link established (Remote PHY/MAC detected and auto-negotiation completed.)	Green
	GTR 8000 Base Radio Ethernet link active (Actively transmitting or receiving data.)	Amber (blinking)
ENET SCB (external connection to SITE CTRL B on the rear of the chassis)	Ethernet link inactive (Remote PHY/MAC not detected.)	Off
	Ethernet link established (Remote PHY/MAC detected and auto-negotiation completed.)	Green
	GTR 8000 Base Radio Ethernet link active (Actively transmitting or receiving data.)	Amber (blinking)
ENET SVC (front panel service port)	Ethernet link inactive (Remote PHY/MAC not detected.)	Off
	Ethernet link established (Remote PHY/MAC detected and auto-negotiation completed.)	Green
	GTR 8000 Base Radio Ethernet link active (Actively transmitting or receiving data.)	Amber (blinking)

10.1.1.3
Transceiver Application-Controlled LEDs

The application-controlled LEDs can be green, red, or amber depending on the conditions.

Table 63: Transceiver Application-Controlled LEDs

Condition	LED 1 Receive Status	LED 2 Control Channel Status	LED 3 Tx/ Service Status	LED 4 Infrastructure Payload Link Status
Booting Up*	Green	Green	Green	Green
Lamp Test	Amber	Amber	Amber	Amber
Receiver Inhibited	Amber (blinking)			
Receiver Active	Green			
RF Channel Interference	Red (blinking)			
Monitor Before Data Transmit	Green			
Illegal Carrier	Red (blinking)			
Control Channel (Operating)		Green		
Control Channel (Failsoft)		Green (blinking)		
Service Mode			Amber	
Transmitter Inhibited			Amber (blinking)	
Infrastructure Link Connected (V.24, IP, and 4–wire/V.24)				Green
Partial Infrastructure Link Established (V.24 link established, 4–wire link not established)				Amber
Infrastructure Link Disconnected (V.24, IP, and 4–wire/V-24)				Green (blinking)

* During a normal boot up sequence, LEDs 1 through 4 blink from left to right and from right to left continuously for several seconds.

10.1.1.4
Transceiver Services-Controlled LEDs

For the service-controlled LEDs, the color of all LEDs must be observed to interpret the condition of the transceiver.

Table 64: Transceiver Services-Controlled LEDs

Condition	LED 5 SWDL/ VLAN	LED 6 Fault	LED 7
Lamp Test	Amber	Amber	Amber
Receiver Inhibited		Red	
Receiver Reference Failure		Red	
Transmitter Inhibited		Red	
SWDL (Software Download transfer in progress)	Green		
Warning		Amber	
Minor Hardware Failure		Amber (blinking)	
Major Hardware Failure		Red (blinking)	
Critical Hardware Failure		Red	
VSWR Fault		Red	

10.1.2
Transceiver Option Card Intercom LED

The Transceiver Option Card has a single Intercom LED that indicates the intercom function between the ON (amber) and OFF (green) states.

Figure 116: Transceiver Option Card Intercom LED (viewable behind the fan module)

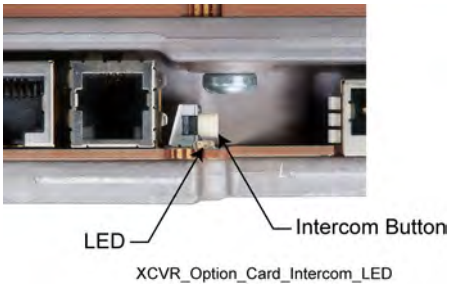

10.1.3
Power Amplifier LEDs

Figure 117: Power Amplifier LEDs, viewable through a drop-down door

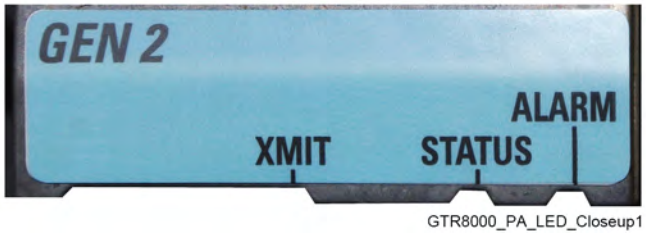

The power amplifier LED color must be observed to interpret the power amplifiers condition. For example:

- If the Alarm LED is red and the Transmit and Status LEDs are not lit, the condition is “PA Failure” and the power amplifier module should be replaced.

Table 65: Power Amplifier LEDs

Condition	Transmit (XMIT)	Status	Alarm
Power Off	Off	Off	Off
Lamp Test	Amber	Green	Red
Not Transmitting	Off	Green	Off
Transmitting at Full Requested Output Power	Green	Green	Off
Transmitting at Less Than Requested Power	Amber	Green	Red
PA Failure	Red	Off	Red
Receive Only	Off	Off	Off
Transmitter Inhibited	Off	Green	Red (blinking)

10.1.4
Fan Module LED

The fan module has one Fan Alarm LED visible on the lower right corner of its front panel. The Alarm is red during Lamp Test (for 1 second or less), and remains red if the fan failures. A fan failure alarm occurs if the built-in speed sensor detects if either fan drops 30% below rated speed. A red Fan Alarm indicates that the fan module must be replaced.

Figure 118: Fan Module-Alarm LED (lower right corner)

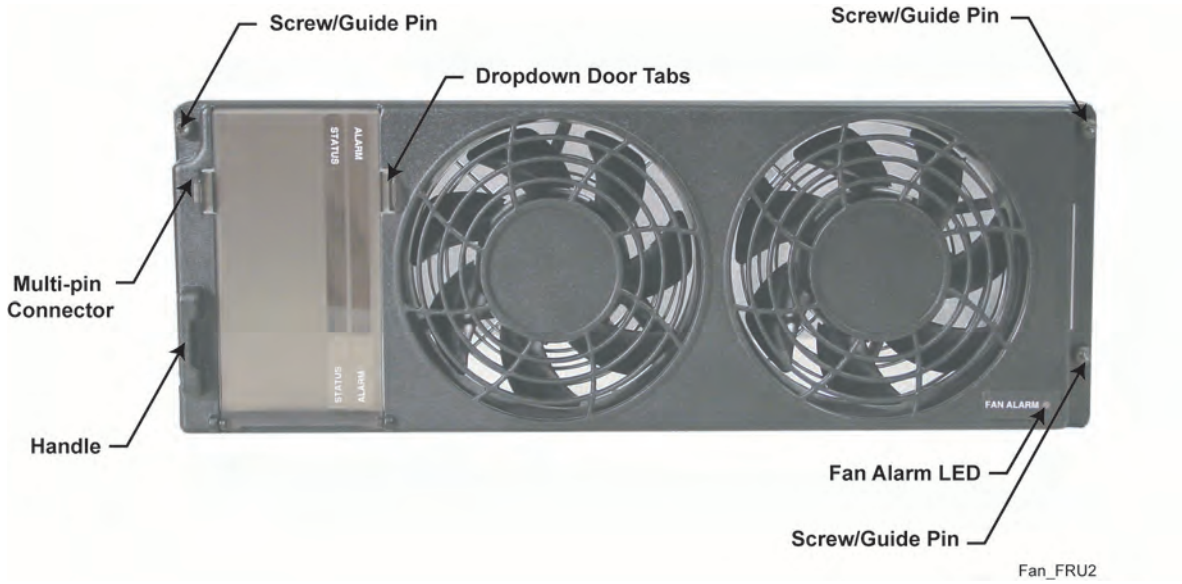

NOTICE: The fan operates at full capability for at least seven days after the fan alarm first occurs, allowing normal operation without requiring an immediate service call.

10.1.5

Power Supply LEDs

The power supply has three LEDs visible from the front panel. To interpret its condition, observe the color of all the power supply LEDs. For example:

- If the Alarm and Fan LEDs are red and the Status LED is green, the condition is "Lamp Test"
- If the Alarm LED is red and the Fan and Status LEDs are not lit, the condition is "Power Supply Failure"

Figure 119: Power Supply Module

Table 66: Power Supply LEDs

Condition	Fan	Status	Alarm
Power Off	Off	Off	Off
Lamp Test	Red	Green	Red
Online	Off	Green	Off
Impaired	Off	Green	Red (blinking)
Power Supply Failure	Off	Off	Red
Power Supply Fan Failure	Red	Off	Red

10.2 RFDS Equipment Specifications

This section provides specifications for all the RFDS equipment.

IMPORTANT: Specifications are subject to change without notice.

10.2.1 Transmit Filter Specifications (700/800 MHz)

Table 67: Transmit Filter Specifications (700/800 MHz)

	Tx Filter Spec Limit (700/800 MHz)	800 MHz Typical	Notes
Frequency range	764–776 MHz, 851–870 MHz		
Insertion loss	0.7 dB	0.3 dB	
VSWR max.	1.5:1	1.12:1	
Rx selectivity	35 dB	40 dB	
Peak instantaneous power	32000 W		
Passive Intermodulation	–135 dBc		2 x 43 dBm
Input Connector	7/16		
Output Connector	7/16		
Power monitor connector	Dsub-9 Male		
Forward power range	0-500 W		0-5V DC out
Reverse power range	0-500 W		0-5V DC out

10.2.2
Preselector Filter Specifications (700/800 MHz)

Table 68: Preselector Filter Specifications (700/800 MHz)

	Preselector Spec Limit (700/800 MHz)	Typical
Frequency range	792–806 MHz 792–825 MHz	
Insertion loss	1 dB	0.7 dB
VSWR max.	1.5:1	1.3:1
Tx selectivity	15 dB	18 dB
Input Connector	QMA	
Output Connector	QMA	

10.2.3
Preselector Filter Specifications (UHF)

Table 69: Preselector Filter Specifications (UHF)

	Preselector Spec Limit (UHF)	Typical
Tuning range	380–433 MHz, 435–470 MHz, 470–524 MHz	
Bandwidth	4 MHz	
Insertion loss	2 dB	1.3 dB
VSWR max.	1.9:1	1.5:1
Input Connector	Mini-UHF	
Output Connector	Mini-UHF	

10.2.4
Preselector Filter Specifications (VHF)

Table 70: Preselector Filter Specifications (VHF)

	Preselector Spec Limit (VHF)	Typical
Tuning range	136–154 MHz, 150–174 MHz	
Bandwidth	4 MHz	
Insertion loss	1.3 dB	1.1 dB

	Preselector Spec Limit (VHF)	Typical
VSWR max.	1.9:1	
Input Connector	Mini-UHF	
Output Connector	Mini-UHF	

10.2.5
Duplexer Specifications (700/800 MHz)

Table 71: Duplexer Specifications (700/800 MHz)

	Duplexer Spec Limit (700/800 MHz)	Typical	Notes
Tx Frequency range	764–776 MHz, 851–870 MHz		
Rx Frequency range	792–806 MHz, 806–825 MHz		
Insertion loss Tx	1 dB	0.5 dB	
Insertion loss Rx	1 dB	0.6 dB	
VSWR max.	1.5:1	1.23:1	
Rx isolation	80 dB	85 dB	
Tx isolation	80 dB	85 dB	
Passive Intermodulation	-120 dBc		2 x 43 dBm
Antenna Connector	QN		
Rx/Tx Output Connector	QN		

10.2.6
Duplexer Specifications (UHF)

Table 72: Duplexer Specifications (UHF)

	Duplexer Spec Limit (UHF)	Typical	Notes
Frequency range	380–403 MHz, 403–435 MHz, 435–470 MHz, 470–494 MHz, 494–512 MHz		
Insertion loss Tx*	1.3 dB	1.1 dB	
Insertion loss Rx*	1.3 dB	1.1 dB	
VSWR max.	1.3:1	1.2:1	
Rx isolation*			

	Duplexer Spec Limit (UHF)	Typical	Notes
<470 MHz >470 MHz	100 dB 100 dB		R/T 5 MHz R/T 3 MHz
Tx isolation* <470 MHz >470 MHz	 100 dB 100 dB		 R/T 5 MHz R/T 3 MHz
Antenna Connector	N female		
Rx/Tx Output Connector	N Female		

* For <470 MHz R/T can be as low as 3 MHz and for >470 MHz R/T can be a low as 2 MHz; however, insertion loss or isolation specs may not be met.

10.2.7
Duplexer Specifications (VHF)

Table 73: Duplexer Specifications (VHF)

	Duplexer Spec Limit (VHF)	Typical	Notes
Frequency range	136–146 MHz, 144–160 MHz, 158–174 MHz		
Insertion loss Tx*	1.3 dB	0.7 dB	
Insertion loss Rx*	1.3 dB	0.7 dB	
VSWR max.	1.5:1	1.2:1	
Rx isolation*	75 dB	80 dB	
Tx isolation*	75 dB	77 dB	
Minimum Tx-Rx Frequency Spacing	1.5 MHz		
Antenna Connector	N female		
Rx/Tx Output Connector	N Female		

* Minimum Tx-Rx spacing may be as low as 1.0 MHz; however, insertion loss of isolation may not be met.

10.2.8
External Dual Circulator Specifications (700/800 MHz)

Table 74: External Dual Circulator Specifications (700/800 MHz)

	External Dual Circulator Spec Limit (700/800 MHz)	Typical
Operating Frequency Range	762–870 MHz	

	External Dual Circulator Spec Limit (700/800 MHz)	Typical
Insertion Loss	1.6 dB	1.2 dB
Input Return Loss	18 dB	
Reverse Isolation	40 dB	42 dB
Power (continuous)	200 W	
Harmonic Attenuation	60 dB	
Intermodulation (2 tone, 100 W each)	–75 dBc	
Input Connector	RF cable with N male	
Output Connector	N female	

10.2.9
External Dual Circulator Specifications (UHF)

Table 75: External Dual Circulator Specifications (UHF)

	External Dual Circulator Spec Limit (UHF)	Typical
Operating Frequency Range	380–435 MHz, 435–470 MHz, 470–524 MHz	
Insertion Loss	1.6 dB	1.2 dB
Input Return Loss	18 dB	24 dB
Reverse Isolation	40 dB	50 dB
Power (continuous)	200 W	
Harmonic Attenuation <10 GHz)	55 dB	
Input Connector	RF cable with N male	
Output Connector	N female	

10.2.10
External Dual Circulator Specifications (VHF)

Table 76: External Dual Circulator Specifications (VHF)

	External Dual Circulator Spec Limit (VHF)	Typical
Operating Frequency Range	136–146 MHz, 144–160 MHz, 158–174 MHz	
Insertion Loss	1.6 dB	0.7 dB
Input Return Loss	18 dB	25 dB
Reverse Isolation	40 dB	50 dB

	External Dual Circulator Spec Limit (VHF)	Typical
Power (continuous)	200 W	
Harmonic Attenuation <10 GHz)	50 dB	
Input Connector	RF cable with N male	
Output Connector	N female	

10.2.11

Antenna Relay Specifications

Table 77: Antenna Relay Specifications

	Antenna Relay Spec Limit	Typical
Operating Frequency Range	DC to 4 GHz @ 20 ºC	
Maximum Input Power	300 W @ 1-4 GHz	
Coil Specifications Pull-in Voltage: Drop-out Voltage: Resistance:	 21.0 V min. 2.0 V max. 430 Ω ±10% @ +20 ºC	
Contact Specifications Type: Actuation: Pull-in time: Drop-out Time and Remake NC Contacts:	 SPDT Failsafe (break before make) 20 ms max. @20 ºC 20 ms max. @20 ºC	
Insertion Loss	0.30 dB max.	
Isolation	70 dB min.	
VSWR Maximum	1.3 : 1	
Temperature Range	-30 ºC to +80 ºC	
Terminations	Female N-type	
Input and Output Impedance	50 Ohms	

Chapter 11

GTR 8000 Base Radio Disaster Recovery

This chapter provides references and information that assist in the recovery of a GTR 8000 Base Radio in the event of failure.

11.1 Recovering the GTR 8000 Base Radio

Perform the following procedure to recover the GTR 8000 Base Radio.

Process:

1. To replace, install, connect power, and cable the base radio, see GTR 8000 Base Radio Hardware Installation on page 94.
2. To replace the transceiver module, see Replacing a Transceiver Module on page 231 and follow steps 1 through 17.
3. To replace other hardware devices within or on the chassis, see GTR 8000 Base Radio FRU Procedures on page 222.
4. To perform basic device configuration and SWDL download, see Replacing a Transceiver Module on page 231 and follow steps 18 through 32.

11.2 Performing a Site Download With PSC 9600 Site Controllers

When and where to use:

NOTICE: The following procedure does not apply to a site with a GCP 8000 Site Controller. To perform the download for a site with a GCP 8000 Site Controller, see Performing a Site Software Download With GCP 8000 Site Controllers on page 278.

Procedure:

1. Transfer and install the latest software, using Software Download Manager with SNMPv1 package to the site controller and base radios, as follows:
   a. Connect an Ethernet straight through cable between the Ethernet port on the service computer/laptop and the Ethernet LAN switch. The laptop IP address must be set to an address on the subnet of the local site, which varies depending on the site and zone numbers. See Connecting Through an Ethernet Port Link on page 140.
2. Open the CSS application.
3. From the menu, select **Tools** → **Connection Configuration**.

   The **Connection Screen** appears.
4. Verify that **Ethernet** is selected in the **Connection Type** area.
5. Specify the IP address for the device in the Ethernet Settings area. Perform one of the following actions:

If…	Then…
If you know the IP address of the device,	perform the following actions: **a** In the **Device IP Address** field, enter the IP address of the device. **b** Go to step 6.
If you do not know the IP address of the device, but know the system identification of the device (the zone, physical site, subsite and device ID of the device),	perform the following actions: **a** Click **Device Name Wizard** to open the **Device Name Wizard** dialog box. **b** From the **Device** list box, select the desired device type. **c** In the **Zone**, **Physical Site**, **Subsite**, and **Device ID** fields, enter the proper values. **d** Click **OK**. The DNS information of the device automatically appears in the **Device IP Address** field. **e** Go to step 6.

6 Click **Connect** to make the connection.

7 From the menu, select **File** → **Read Configuration From Device**.

The parameters download from the device to the service computer/laptop. When the download is complete, the CSS Main window opens.

8 Open the Software Download Manager application.

CAUTION:

Make sure to load the correct version of the software. There is a possibility of a mismatch in software versions when replacing the transceiver module with an on-hand spare. If a mismatch in software versions occurs, this mismatch may cause the transceiver to go into a configuration mode of operation with a reason of 'Invalid Software Version'. To exit the base radio out of configuration mode, see CSS Procedures > Changing from Configuration to Normal Mode in the *CSS Online Help*.

9 Download and install the necessary software onto the site controllers and base radio as follows:

a From the menu, select **File** → **File Manager**.

The **Software Depot File Manager** opens.

b From the menu, select **Component Operations** → **Import Fileset**.

The **Import a Fileset Into the Software Depot** dialog box appears.

c Click **Browse** and search for the **swdlv1.cfg** file, or use path `E:\swdl\swdlv1.cfg`. Click **Open**.

d Click **Generate** to add the file to the **Components In the Software Depot** list. Click **OK**.

e Exit the **Software Depot File Manager**.

f From Software Download Manager, select the appropriate **ASTRO 25 System Site Type**.

g Select the **Zone**, **Site**, and if applicable, the **Subsite**.

h Click **Connect**.

i For the **Operations Type**, select **Transfer and Install**.

j For the **Application Type**, select both **Repeater Site Controller** and **Site Repeater**.

k Select a Software Component from the drop-down list.

l Click **Start Operation** to download and install the software.

NOTICE: The Software Download Manager client software may display a warning that all device types must be upgraded at the same time and that Site Controller-only or Channel-only installs are prohibited. If that warning is displayed, ensure that you are performing a site software download rather than a single device software download.

The site controllers and the base radios are all loaded with the new software.

11.3 Performing a Site Software Download With GCP 8000 Site Controllers

Use the following procedure to perform a site software download with GCP 8000 site controllers.

Procedure:

1. Connect an Ethernet straight through cable between the Ethernet port on the service computer/laptop and the Ethernet service port on the site controller. The service computer/laptop IP address must be set to an address on the subnet of the local site, which varies depending on the site and zone numbers. See Connecting Through an Ethernet Port Link on page 140.

   NOTICE: If 802.1x services are enabled on the site controller, an 802.1x login account to connect to the Ethernet port is needed. An 802.1x account is a centrally managed account. See Chapter 6, “802.1x Service Port Procedures for GCP 8000 Site Controller” in the *802.1x Service Ports on Switches* manual.

2. Open the Software Download Manager application.

   CAUTION: Load the correct version of the software. There is a possibility of a mismatch in software versions when replacing the transceiver module with an on-hand spare. If a mismatch in software versions occurs, the transceiver may go into a configuration mode of operation with a reason of ‘Invalid Software Version’. To exit out of configuration mode, see “CSS Procedures > Changing from Configuration to Normal Mode” in the *CSS Online Help*.

3. From the **Advanced Options** menu, select the transfer type.

4. Download and install the necessary software onto the site controllers and base radios as follows:

   a From the menu, select **Action** and choose one of the following:

   - **Use DNS Server:** This is the default option and is recommended for most cases.
   - **Use Standard ASTRO IPs (non-Tsub):** Legacy option which relies upon a built-in IP Plan rather than the DNS Server. This option is not supported for Trunking Subsystems (Tsubs).
   - **DNS Override:** Use when running the Software Download Manager from a server that is not joined to the ASTRO® 25 system domain. In order to use a DNS server in the ASTRO® 25 system domain, the **Override DNS Server** dialog box is used to specify the DNS server IP address (defaults to the ASTRO® 25 system level DNS server).
   - **Load DNS File:** Use only in situations where a custom DNS configuration file has been provided. Typically, this option is selected when the site IP addresses are not configured to be part of an ASTRO® 25 system.

   b From the menu, select **File** → **File Manager**.

c From the **Software Depot File Manager** menu, select **Component Operations** → **Import Fileset**.

d From the **Import a Fileset Into the Software Depot** dialog box, click **Browse** and search for the `swdlv3.cfg` file, or follow path `E:\swdl\swdlv1.cfg` or `swdlv3.cfg`. Click **Open**.

NOTICE: Choose the `swdlv1.cfg` file if PSC 9600, QUANTAR®, and ASTRO-TAC® 9600 devices are mixed with G-Series devices at a site.

The file appears in the **Configuration File Path** field of the **Import a Fileset Into the Software Depot** dialog box.

e Click **Generate**. Click **OK**.

the **Import a Fileset Into the Software Depot** dialog box closes and the software component appears in the **Components In the Software Depot** list of the **Software Depot File Manager** window.

f Exit the **Software Depot File Manager**.

g From Software Download Manager, click **Open Site Mode**.

h Select the **ASTRO 25 Site Type:Repeater**, **HPD**, or **Simulcast**.

i Select the **Zone**, **Site**, and if applicable, the **Subsite**. The Subsite ID is only available when the **Site ID** is between 1-64.

j Click **Connect**.

k If the device supports SNMPv3 protocol, a pop-up window appears with the security level option. Choose the required security level. Click **OK**.

NOTICE: Depending on the size of the system, the window takes a few minutes to update.
If the Ethernet connection to the site uses the Site Controller Service Port, you might need to enter an 802.1x login account to connect to the SC Service Port. An 802.1x account is a centrally managed account.

The system connects to the specified zone and site.

l If this is a simulcast site, from the **Site View** tab, click the icon in front of the **Prime LAN** folder, and **Subsite** folders.

The entries under the **Running Version** column display the current version. The **VLAN** column displays the VLANs for all devices.

m In the **Operation Type**, select **Transfer and Install**.

n In the **Application Type**:

- For an HPD site: select both **HPD Site Controller** and **HPD Base Radio**.
- For a repeater site: select both **Repeater Site Controller** and **Site Repeater**.
- For a trunked simulcast site: select **Multisite Site Controller** and **Multisite Base Radio**.

o In the **Software Component** drop-down list, select the version for each site device.

NOTICE: Both device software must be chosen as part of the site software download.

p In the **Simultaneous Channels Install** drop down list, select the number of the channels to install simultaneously.

Software Download Manager always installs all channels. For example: setting the **Simultaneous Channels Install** field to a specific number value means that those amounts of channels are installed simultaneously.

NOTICE: The **Simultaneous Channels Install** field decreases the installation time. A warning is displayed if the site goes into failsoft, due to this setting.

q Click **Start Operation**.

NOTICE: If the **Start Operation** button is grayed out, SWDL has determined that there is a problem performing this operation to the selected devices. The button becomes active, when the appropriate operation set details are selected.
If a fileset is damaged, the Transfer operation stops. Import a correct fileset and repeat the operation.

r In the window that appears, click **Proceed**.

The Transfer operation begins first. After the transfer is successfully completed, SWDL begins the Install operation.

If the install was successful, the **Operation Status** bar displays green. If the install failed, the **Operation Status** bar displays red.

s Disconnect and reconnect to verify that the selected devices have installed the desired version of the software.

NOTICE: After installation, the new software version is present in the **Running Version** column. If the new version is not present, it indicates a problem.
For more information, consult the “Fixing a Transfer Failure” section of the *Software Download Manager* manual.

In many cases, a second attempt at transferring the software corrects the failure. If further attempts continue to fail, contact Motorola Solutions Support (MSS).

Appendix A

Conventional GTR 8000 Base Radio Option Kits

The required hardware and cables for the CA01958AA T2-2R Receiver Mute option kit are listed in this section.

This appendix covers the option kits that are available for the conventional GTR 8000 Base Radio. Each section provides the necessary information to order, install, and configure each option kit.

A.1 T2-2R, T3-3R, and T4-4R Receiver Mute Option Kits

The required hardware and cables for the CA01958AA T2-2R Receiver Mute option kit are listed in this section.

These option kits add the capability of simplex operation, while expanding the receive capability over two or more separate RF channels through a single antenna. The option kits allow a single GTR 8000 Base Radio to be interfaced with up to three GPW 8000 Receivers. The GTR 8000 Base Radio provides both transmit and receive functionality. The GPW 8000 Receivers are used as additional receive channels.

Four different Receiver Mute option kits are available:

- T2-2R Receiver Mute Option CA01958AA (ADD: 2 GPW 8000 Receiver Hardware Kit - 4-Wire Analog)
- T3-3R Receiver Mute Option CA01959AA (ADD: 3 GPW 8000 Receiver Hardware Kit - 4-Wire Analog)
- T4-4R Receiver Mute Option CA01960AA (ADD: 4 GPW 8000 Receiver Hardware Kit - 4-Wire Analog)
- Tn-nR Receiver Mute Option CA01961AA (ADD: GPW 8000 Receiver Hardware No Splitter Kit - 4-Wire Analog)

NOTICE: All Field Replaceable Unit (FRU), kit, and part numbers for all required components in each kit are listed in the parts list section for each receiver mute kit.

A single standalone T7039A GTR 8000 Base Radio is required for each option kit. The option kit name determines the number of GPW 8000 Receivers. For example, a T2-2R option kit requires one GTR 8000 Base Radio and one GPW 8000 Receiver. A T3-3R requires one base radio and two receivers, and so on. The number defines the total number of G-series devices.

A.1.1 T2-2R Receiver Mute Option Kit

The required hardware and cables for the CA01958AA T2-2R Receiver Mute option kit are listed in this section.

The CA01958AA T2-2R Receiver Mute option kit is used with a standalone GTR 8000 Base Radio and one GPW 8000 Receiver. All option kit hardware and cables required are included in Table 78: T2-2R Receiver Mute Option Kit Parts List on page 282.

NOTICE: The illustrations show a GPW 8000 Receiver with one chassis and one transceiver. A dual-slot chassis with two transceivers is available.

Figure 120: T2-2R Receiver Mute Option Kit Wiring Diagram

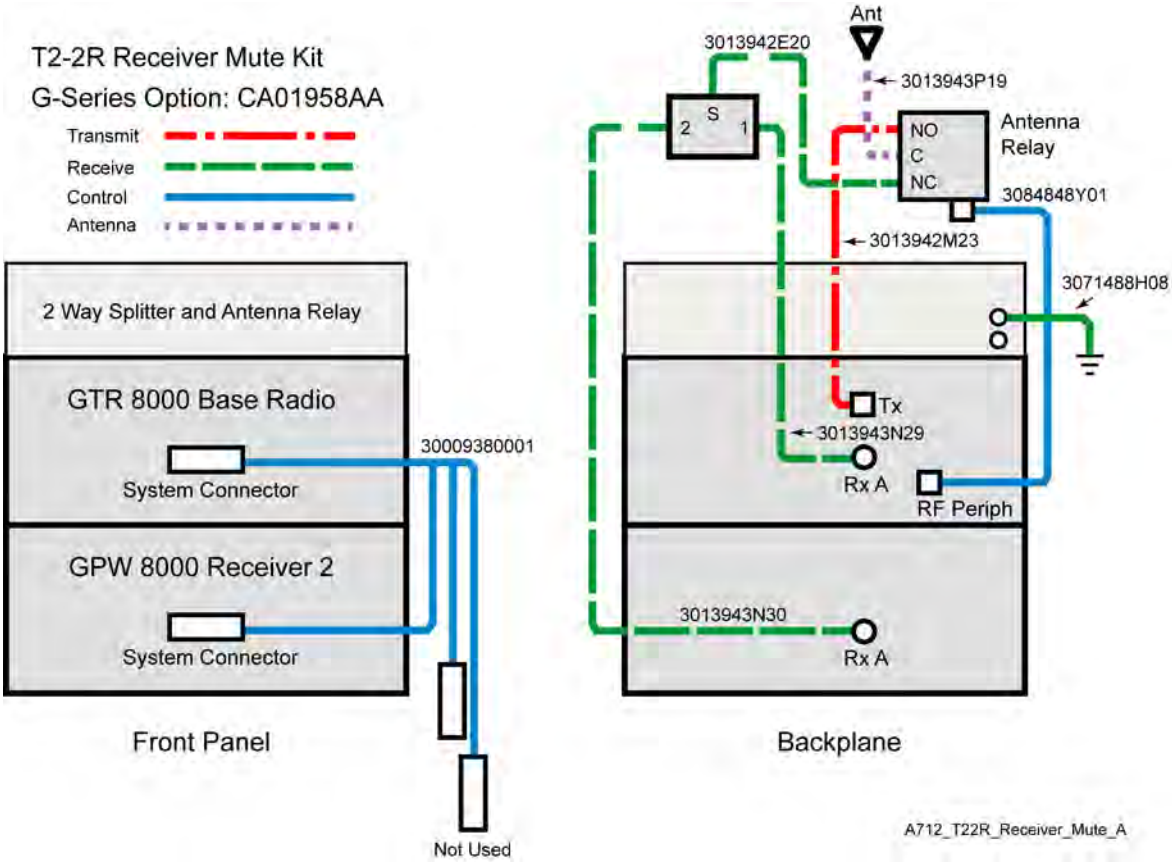

NOTICE: See System Connector Ports (Conventional) on page 112 for a detailed description of the system connector pinouts.

NOTICE: See Figure 122: T4-4R Receiver Mute Configuration on page 286 for an example of a Receiver Mute configuration. However, the T2-2R Receiver Mute configuration only has one GPW 8000 Receiver.

A.1.1.1
T2-2R Receiver Mute Option Kit Parts List

The required hardware and cables for the CA01958AA T2-2R Receiver Mute option kit are listed in this section.

Table 78: T2-2R Receiver Mute Option Kit Parts List

FRU	Kit	Part Number	Description	Quantity
DLN6795A			**T2-2R RECEIVER MUTE**	1
	CLN8788A		**HARDWARE, T2-2R RECEIVER MUTE**	1
		0182017V14	SPLITTER, 2 WAY	1
		0285854Y01	NUT, M6-GROUND WIRE TO STUDS ON TRAY	2
		0310909E32	SCRMCH M3X0.5X8 SPLTR MTG	4

FRU	Kit	Part Number	Description	Quanti-ty
		0310909A54	SCREW 3.5X30MM ANT RELAY MTG	2
		0310909E46	SCRMCH M3.5X0.6X8 ANT CONN & SIDE BRKTS	12
		0312016A49	SCREW FRONT PANEL TO CHASSIS (blk)	4
		0312016A54	SCRTPG M6 X 1 X 10 (blk) TRAY TO RACK	4
		07009370001	BRACKET CHASSIS SUPPORT	2
		27009304001	CHASSIS, PERIPHERAL	1
		40009272002	RELAY, COAXIAL 29V	1
		5682347B20	BAG FOR SCREWS	1
		64009317001	PANEL, FRONT	1
		0285504U05	CAGE NUT, M6 FOR CABINET MTG	4
		0310909C91	SCREW M6-GROUND CABLE TO BUS BAR AND TRAY TO CABINET CAGE NUTS	5
	CKN6941 A		**CABLES, T2-2R RECEIVER MUTE**	1
		30009380001	CABLE, SAC	1
		3013942M23	CBL N-N M-M 75 CM	1
		3013942P19	CBL N-N M-F PNL 55 CM	1
		3013943E20	CBL N-BNC M-M 60 CM	1
		3013943N29	CBL BNC-BNC M-M 110 CM	1
		3013943N30	CBL BNC-BNC M-M 120 CM	1
		3084848Y01	CABLE RELAY W/TEMP	1
		3071488H08	CABLE, GROUND TRAY TO BUS BAR	1
		58009291001	Adapter, N Plug to BNC Jack	2
		4210217A04	STRAP TIE .184X7.31 NYL BLK	10
		5682347B21	BAG, PLASTIC 584 X 431 MM	1
		SVCWARR12	12 MONTH STANDARD WARRANTY	1

A.1.2

T3-3R Receiver Mute Option Kit

The CA01959AA T3-3R Receiver Mute option kit is used with a standalone GTR 8000 Base Radio and two GPW 8000 Receivers. All option kit hardware and cables required are included in Table 79: T3-3R Receiver Mute Option Kit Parts List on page 284.

NOTICE: The illustrations show a GPW 8000 Receiver with one chassis and one transceiver. A dual-slot chassis with two transceivers is available.

Figure 121: T3-3R Receiver Mute Option Kit Wiring Diagram

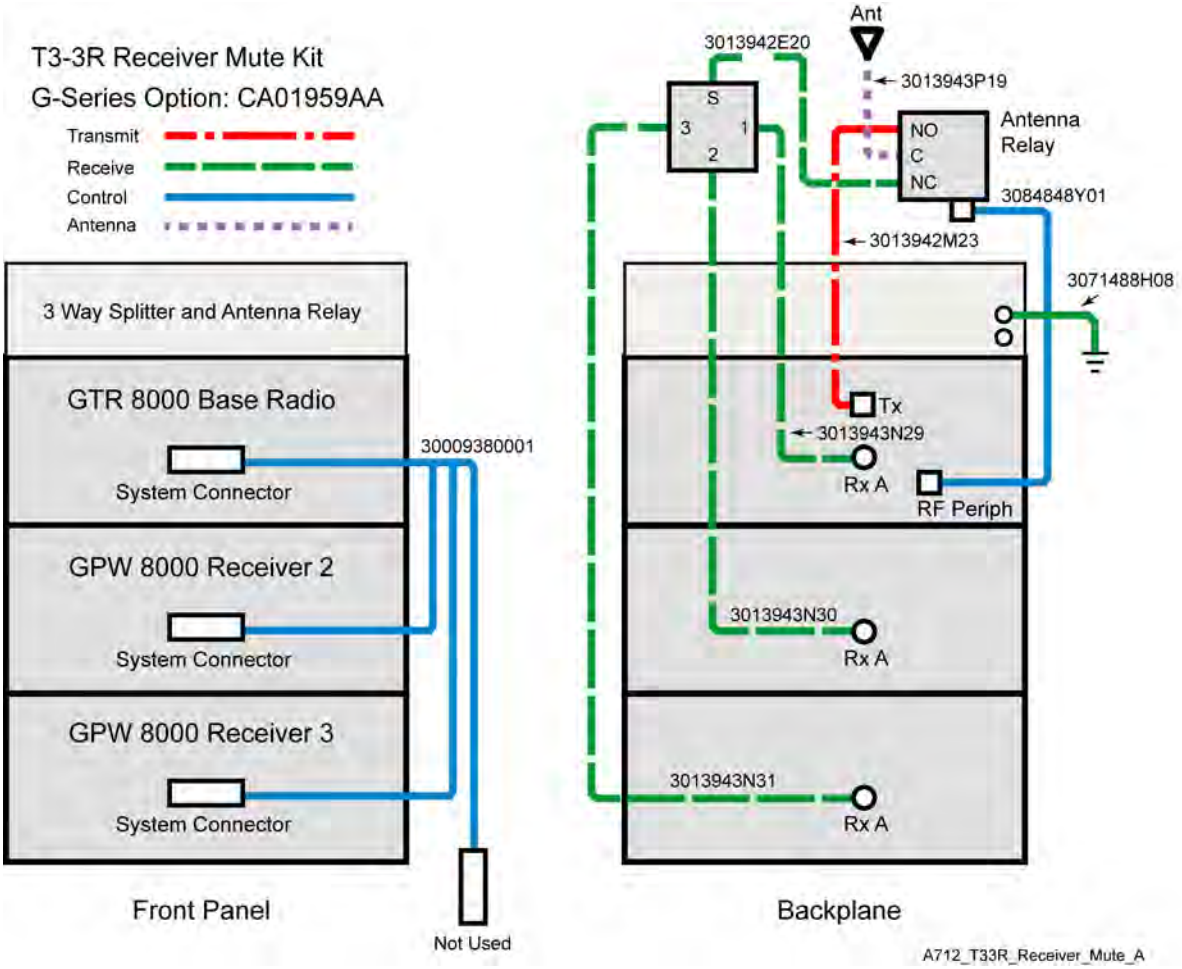

NOTICE: See System Connector Ports (Conventional) on page 112 for a detailed description of system connector pinouts.

NOTICE: See Figure 122: T4-4R Receiver Mute Configuration on page 286 for an example of a Receiver Mute configuration. However, the T3-3R Receiver Mute configuration only has two GPW 8000 Receivers.

A.1.2.1

T3-3R Receiver Mute Option Kit Parts List

The required hardware and cables for the CA01959AA T3-3R Receiver Mute option kit are listed in this section.

Table 79: T3-3R Receiver Mute Option Kit Parts List

FRU	Kit	Part Number	Description	Quantity
DLN6796A			**T3-3R RECEIVER MUTE**	1
	CLN8789A		**HARDWARE, T3-3R RECEIVER MUTE**	1
		0182017V15	SPLITTER, 3WAY	1

FRU	Kit	Part Number	Description	Quanti-ty
		0285854Y01	NUT, M6-GROUND WIRE TO STUDS ON TRAY	2
		0310909E32	SCRMCH M3X0.5X8 SPLTR MTG	4
		0310909A54	SCREW 3.5X30MM ANT RELAY MTG	2
		0310909E46	SCRMCH M3.5X0.6X8 ANT CONN & SIDE BRKTS	12
		0312016A49	SCREW FRONT PANEL TO CHASSIS (blk)	4
		0312016A54	SCRTPG M6 X 1 X 10 (blk) TRAY TO RACK	4
		07009370001	BRACKET CHASSIS SUPPORT	2
		27009304001	CHASSIS, PERIPHERAL	1
		40009272002	RELAY, COAXIAL 29V	1
		5682347B20	BAG FOR SCREWS	1
		64009317001	PANEL, FRONT	1
		0285504U05	CAGE NUT, M6 FOR CABINET MTG	4
		0310909C91	SCREW M6-GROUND CABLE TO BUS BAR AND TRAY TO CABINET CAGE NUTS	5
	CKN6942A		**CABLES, T3-3R RECEIVER MUTE**	1
		30009380001	CABLE, SAC	1
		3013942M23	CBL N-N M-M 75 CM	1
		3013942P19	CBL N-N M-F PNL 55 CM	1
		3013943E20	CBL N-BNC M-M 60 CM	1
		3013943N29	CBL BNC-BNC M-M 110 CM	1
		3013943N30	CBL BNC-BNC M-M 120 CM	1
		3013943N31	CBL BNC-BNC M-M 130 CM	1
		3084848Y01	CABLE RELAY W/TEMP	1
		3071488H08	CABLE, GROUND TRAY TO BUS BAR	1
		58009291001	Adapter, N Plug to BNC Jack	3
		4210217A04	STRAP TIE .184X7.31 NYL BLK	10
		5682347B21	BAG, PLASTIC 584 X 431 MM	1
		SVCWARR12	12 MONTH STANDARD WARRANTY	1

A.1.3
T4-4R Receiver Mute Option Kit

The CA01960AA T4-4R Receiver Mute option kit is used with a standalone GTR 8000 Base Radio and three GPW 8000 Receivers. All option kit hardware and cables required are included in Table 80: T4-4R Receiver Mute Option Kit Parts List on page 287.

NOTICE: The photos and illustrations show a GPW 8000 Receiver with one chassis and one transceiver. A dual-slot chassis with two transceivers is available.

Figure 122: T4-4R Receiver Mute Configuration

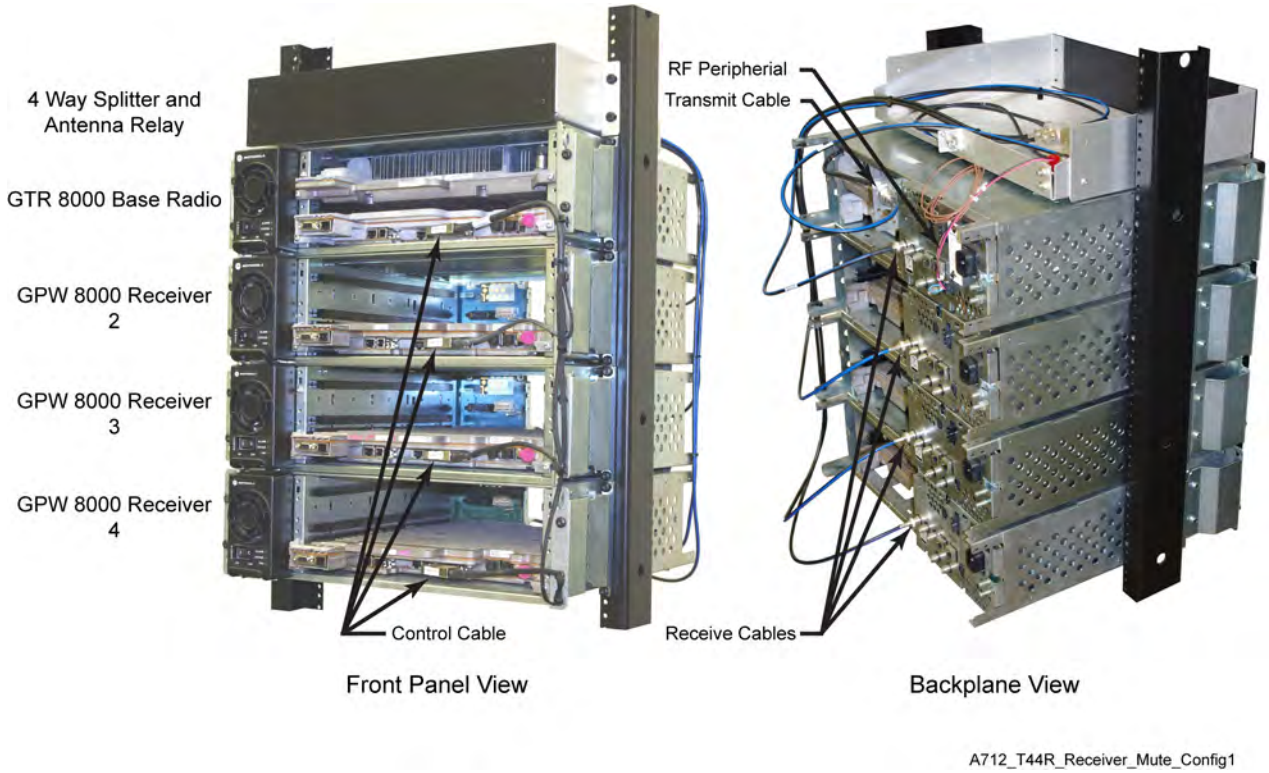

Figure 123: T4-4R Splitter and Antenna Relay Tray

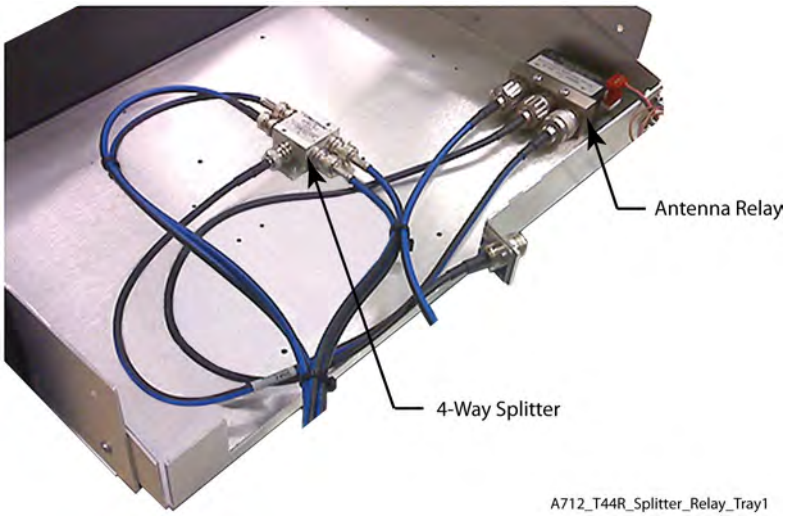

The wiring diagram for the T4-4R Receiver Mute option kit outlines the connections for all cables and provides part numbers for each type.

Figure 124: T4-4R Receiver Mute Option Kit Wiring Diagram

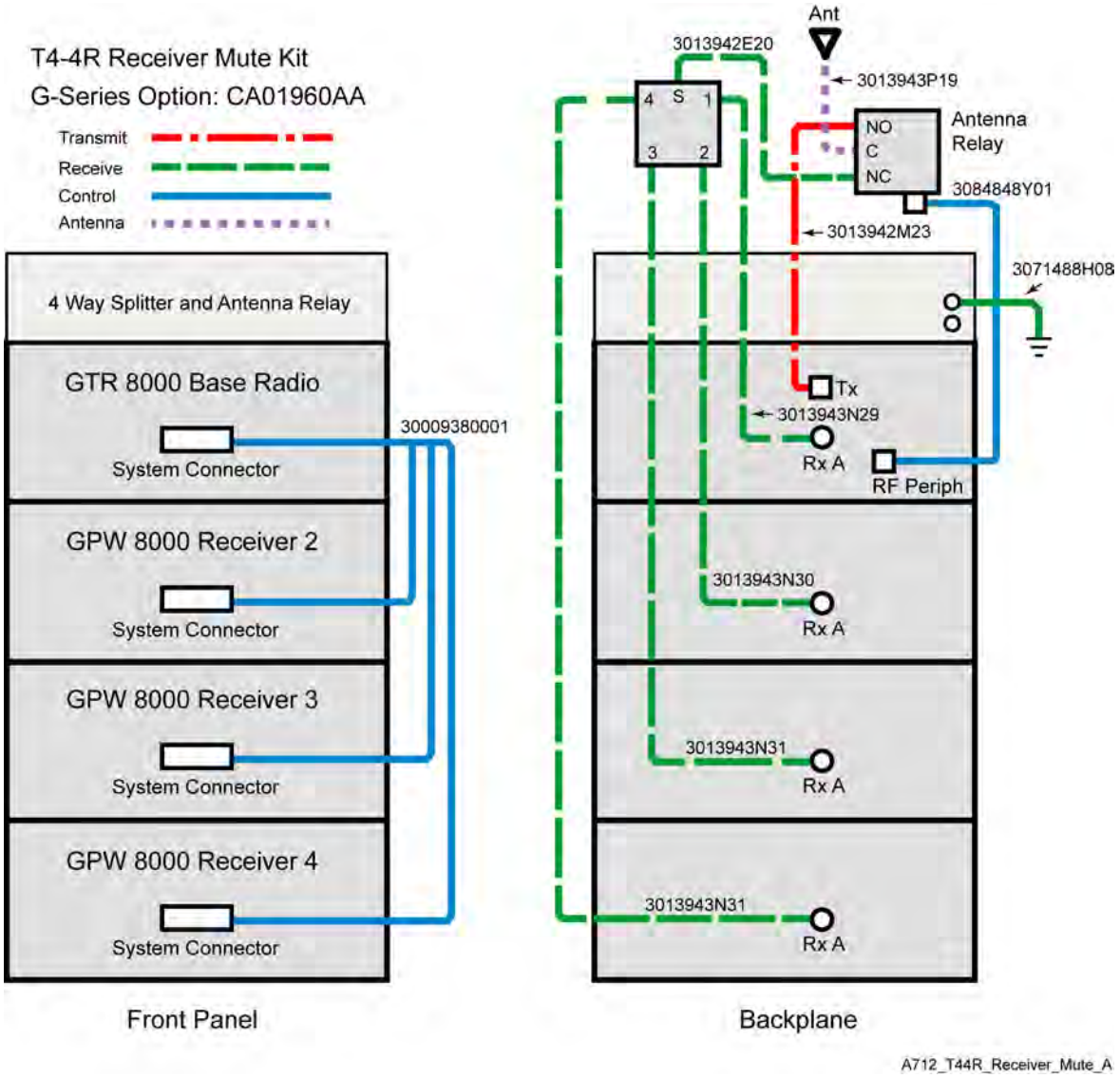

NOTICE: See System Connector Ports (Conventional) on page 112 for a detailed description of system connector pinouts.

A.1.3.1

T4-4R Receiver Mute Option Kit Parts List

The required hardware and cables for the CA01960AA T4-4R Receiver Mute option kit are listed in this section.

Table 80: T4-4R Receiver Mute Option Kit Parts List

FRU	Kit	Part Number	Description	Quantity
DLN6797A			**T4-4R RECEIVER MUTE**	1
	CLN8790A		**HARDWARE, T4-4R RECEIVER MUTE**	1
		0182017V16	SPLITTER, 4WAY	1

FRU	Kit	Part Number	Description	Quanti-ty
		0285854Y01	NUT, M6-GROUND WIRE TO STUDS ON TRAY	2
		0310909E32	SCRMCH M3X0.5X8 SPLTR MTG	4
		0310909A54	SCREW 3.5X30MM ANT RELAY MTG	2
		0310909E46	SCRMCH M3.5X0.6X8 ANT CONN & SIDE BRKTS	12
		0312016A49	SCREW FRONT PANEL TO CHASSIS (blk)	4
		0312016A54	SCRTPG M6 X 1 X 10 (blk) TRAY TO RACK	4
		07009370001	BRACKET CHASSIS SUPPORT	2
		27009304001	CHASSIS, PERIPHERAL	1
		40009272002	RELAY, COAXIAL 29V	1
		5682347B20	BAG FOR SCREWS	1
		64009317001	PANEL, FRONT	1
		0285504U05	CAGE NUT, M6 FOR CABINET MTG	4
		0310909C91	SCREW M6-GROUND CABLE TO BUS BAR AND TRAY TO CABINET CAGE NUTS	5
	CKN6943A		**CABLES, T4-4R RECEIVER MUTE**	1
		30009380001	CABLE, SAC	1
		3013942M23	CBL N-N M-M 75 CM	1
		3013942P19	CBL N-N M-F PNL 55 CM	1
		3013943E20	CBL N-BNC M-M 60 CM	1
		3013943N29	CBL BNC-BNC M-M 110 CM	1
		3013943N30	CBL BNC-BNC M-M 120 CM	1
		3013943N31	CBL BNC-BNC M-M 130 CM	2
		3084848Y01	CABLE RELAY W/TEMP	1
		3071488H08	CABLE, GROUND TRAY TO BUS BAR	1
		58009291001	Adapter, N Plug to BNC Jack	4
		4210217A04	STRAP TIE .184X7.31 NYL BLK	10
		5682347B21	BAG, PLASTIC 584 X 431 MM	1
		SVCWARR12	12 MONTH STANDARD WARRANTY	1

A.1.4

Expected Site Performance for T2-2R, T3-3R, and T4-4R Receiver Mute

The additional cables, splitter, and relay affect receiver sensitivity and transmitter output power. Use the attenuation values found in this section to determine the expected site performance. Other base radio and receiver specifications are not affected.

Table 81: Total Transmit and Receive Attenuation for T2-2R, T3-3R, and T4-4R Receiver Mute

Band Type Attenuation	CA01958AA: T2-2R	CA01959AA: T3-3R	CA019860AA: T4-4R
VHF Receive (Rx)	3.7 dB typical 4.0 dB maximum	5.6 dB typical 5.9 dB maximum	7.0 dB typical 7.3 dB maximum
VHF Rx Port to Port Isolation	32 dB typical	27 dB typical	30 dB typical
VHF Transmit (Tx)	0.3 dB typical 0.4 dB maximum	0.3 dB typical 0.4 dB maximum	0.3 dB typical 0.4 dB maximum
UHF Rx	4.2 dB typical 4.4 dB maximum	6.3 dB typical 6.5 dB maximum	7.5 dB typical 7.8 dB maximum
UHF Rx Port to Port Isolation	28 dB typical	21 dB typical	25 dB typical
UHF Tx	0.5 dB typical 0.6 dB maximum	0.5 dB typical 0.6 dB maximum	0.5 dB typical 0.6 dB maximum
800 MHz Rx	5.1 dB typical 5.4 dB maximum	7.2 dB typical 7.5 dB maximum	8.5 dB typical 8.8 dB maximum
800 MHz Rx Port to Port Isolation	28 dB typical	25 dB typical	25 dB typical
800 MHz Tx	0.8 dB typical 1.0 dB maximum	0.8 dB typical 1.0 dB maximum	0.8 dB typical 1.0 dB maximum

A.1.5

Tn-nR Receiver Mute Option Kit

The CA01961AA Tn-nR Receiver Mute option kit is used with a standalone GTR 8000 Base Radio and up to three GPW 8000 Receivers.

NOTICE: The illustrations show a GPW 8000 Receiver with one chassis and one transceiver. A dual-slot chassis with two transceivers is available.

Figure 125: Tn-nR Receiver Mute Option Kit Wiring Diagram

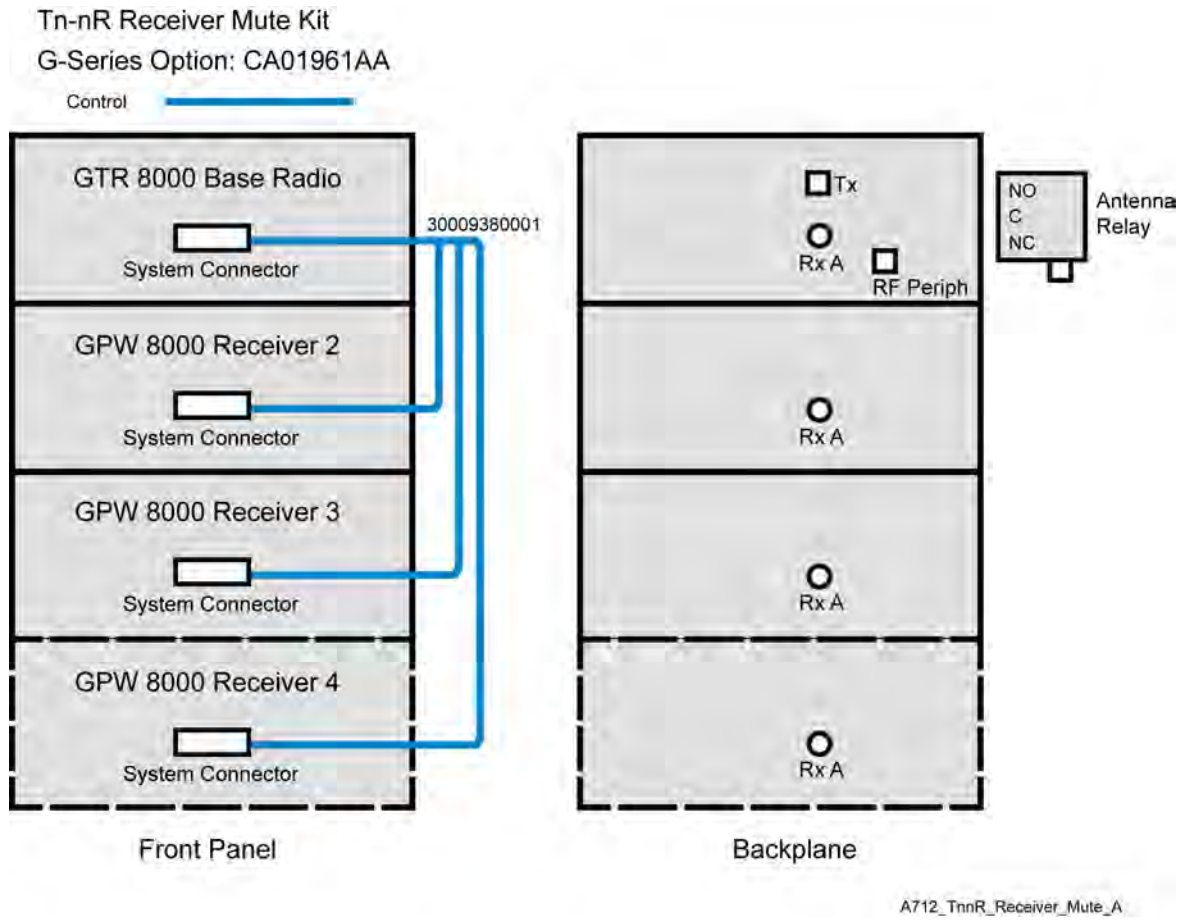

NOTICE: See System Connector Ports (Conventional) on page 112 for a detailed description of system connector pinouts.

NOTICE: The antenna relay is mounted on the backplane of the GTR 8000 Base Radio. The only cable used with the Tn-nR Receiver Mute option kit is the control cable. All other required option kit hardware is included in Table 82: Tn-nR Receiver Mute Option Kit Parts List on page 290.

A.1.5.1
Tn-nR Receiver Mute Option Kit Parts List

The required hardware and cable for the CA01961AA Tn-nR Receiver Mute option kit are listed in this section.

Table 82: Tn-nR Receiver Mute Option Kit Parts List

FRU	Kit	Part Number	Description	Quantity
DLN6798A			**RCVR SOFT NO SPLITTER**	1
	CKN6944A		**CABLES, RCVR SOFT NO SPLITTER**	1
		30009380001	CABLE, SAC	1
		4210217A04	STRAP TIE .184X7.31 NYL BLK	10

FRU	Kit	Part Number	Description	Quanti-ty
		5682347B21	BAG, PLASTIC 584 X 431 MM	1
		SVCWARR12	12 MONTH STANDARD WARRANTY	1

A.1.6

Installing the T2-2R, T3-3R, and T4-4R Receiver Mute Option Kits

Procedure:

1 Install the standalone GTR 8000 Base Radio and GPW 8000 Receivers according to the processes and procedures in the Base Radio or Receiver Installation chapter.

WARNING: To guard against personal injury and/or damage to equipment, place the base radio to Service Mode when performing service. Transmit inhibiting the base radio within the **Station Status** screen in the Configuration/Service Software (CSS) also prevents the transmitter from keying. Place the base radio back to Normal Mode when service is complete.

NOTICE: See Figure 122: T4-4R Receiver Mute Configuration on page 286 for an example of the GTR 8000 Base Radio and GPW 8000 Receivers installed in a rack. Leave no spaces between the devices in a rack or cabinet installation. Leave enough space above the splitter and antenna relay tray to allow room for connecting cables.

2 If the devices are in Normal Mode, ensure that each device is placed in Service Mode, as follows:

a Connect to the transceiver module Ethernet service port using CSS. See Connecting Through an Ethernet Port Link on page 140.

b From the menu, select **File** → **Read Configuration From Device**.

c From the menu, select **Service** → **Test And Measurement Screen**.

d Click **Change to Service Mode**.

e At the confirmation screen, click **OK**.

The device halts activity in the current mode and switches operation to the requested mode.

NOTICE: If you choose to turn off the power, set the rocker switch on the front of the associated power supply to the Off (O) position.

f Disconnect the Ethernet cable from the transceiver module Ethernet service port.

g Repeat for each device in the configuration.

3 Remove the fan module to gain access to the Transceiver Option Card (TOC) on the transceiver module. See Replacing the Fan Assembly on page 237 for details.

4 Connect cables to each device according to its relevant wiring diagram.

- For a T2-2R Receiver Mute configuration, see Figure 120: T2-2R Receiver Mute Option Kit Wiring Diagram on page 282 for details.
- For a T3-3R Receiver Mute configuration, see Figure 121: T3-3R Receiver Mute Option Kit Wiring Diagram on page 284 for details.
- For a T4-4R Receiver Mute configuration, see Figure 124: T4-4R Receiver Mute Option Kit Wiring Diagram on page 287 for details.
- For a Tn-nR Receiver Mute configuration, see Figure 125: Tn-nR Receiver Mute Option Kit Wiring Diagram on page 290 for details.

NOTICE: When the GTR 8000 Base Radio or GPW 8000 Receiver is ordered with the preselector option, the type N to BNC adaptor (58009291001) must be used on the receiver end of RF cables. See Figure 122: T4-4R Receiver Mute Configuration on page 286 for an example of how to route cables.

5 Replace the fan modules for the base radio and receivers. See Replacing the Fan Assembly on page 237.

NOTICE: If you chose to turn off the power, set the rocker switch on the front of the associated power supply to the On (I) position.

6 Place each device to Normal Mode, as follows:

a Connect to the transceiver module Ethernet service port using CSS. See Connecting Through an Ethernet Port Link on page 140.

b From the menu, select **File** → **Read Configuration From Device**.

c From the menu, select **Service** → **Test And Measurement Screen**.

d Click **Change to Normal Mode**.

e At the confirmation screen, click **OK**.

The device halts activity in the current mode and switches operation to the requested mode.

f Disconnect the Ethernet cable from the transceiver module Ethernet service port.

g Repeat for each device in the configuration.

A.1.7

Configuring the T2-2R, T3-3R, and T4-4R Receiver Mute Option Kits

Prerequisites: Ensure that all required installation procedures have been performed for the base radio and receiver and that the devices have been powered up.

When and where to use: This procedure is used to configure the WildCard Tables for a Receiver Mute configuration using the Configuration/Service Software (CSS).

Procedure:

1 If necessary, perform the initial configuration for the base radio and receiver. See Device Configuration in CSS on page 134 for details.

2 Connect to the Ethernet port on the device. See Connecting Through an Ethernet Port Link on page 140 for details.

3 From the menu, select **File** → **Read Configuration From the Device**.

4 From the navigation pane, select **Hardware Configuration**. Set **Station Type [R]** to **Analog Only**.

NOTICE: When configuring GPW 8000 Receivers, the **Hardware Platform [R]** parameter is set to **GPW 8000 Satellite Receiver**. The **Antenna Relay [R]** parameter is not configurable for GPW 8000 Receivers.

5 Set **Antenna Relay [R]** to **Enabled**.

NOTICE: Use the default value of 30 ms for the Antenna Relay Delay. This step is not required for GPW 8000 Receivers.

6 From the navigation pane, select **WildCard Tables**. Click **Set to Default** to add default WildCard tables.

Figure 126: CSS - WildCard Tables Example

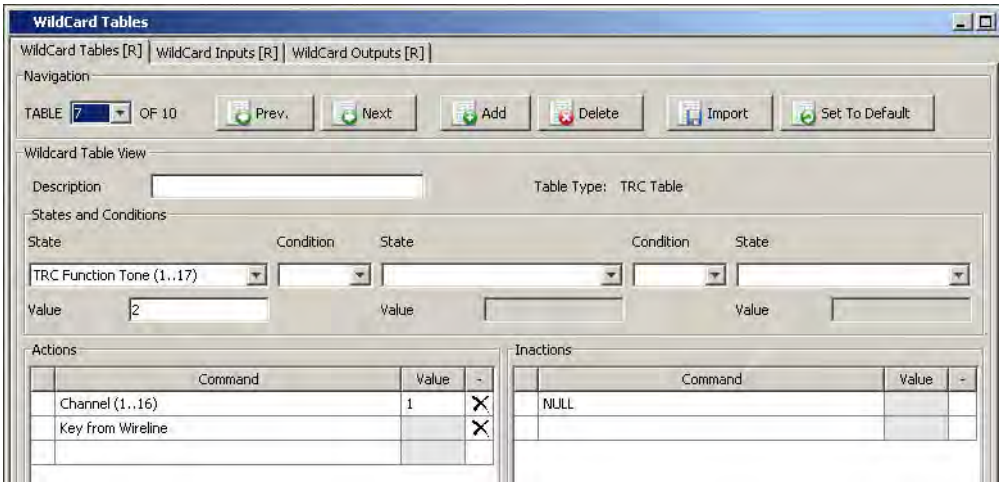

7 Click **Yes** to reset the WildCard Tables to their default structure. The following default WildCard Tables are created:

NOTICE: WildCard Table numbers are arbitrary and shown for illustration purposes. Memory size and the number of States and Commands in each table limit the maximum number of WildCard tables.

Wild-Card Table	Descrip-tion	States and Condi-tion		Actions		Inactions	
		State	Value	Com-mand	Value	Com-mand	Value
1	In-cabi-net RPT	Input 6	n/a	In-cabi-net Re-peat ON	n/a	In-Cabi-net Re-peat OFF	n/a
2	Rx In-hibit	Input 7	n/a	RX IN-HIBIT	n/a	RX EN-ABLE	n/a
3	External PTT	Input 5	n/a	Key from Wi-deband	n/a	Dekey from Wi-deband	n/a
4	RD STAT-RX ACT	RX Qualifi-ers Met	n/a	Set Out-put (1..12)	7	Clear Output (1..12)	7
5	Tx In-hibit	Input 3	n/a	TX IN-HIBIT	n/a	TX EN-ABLE	n/a
6		TRC Function Tone (1..17)	1	Monitor	n/a	NULL	n/a
7		TRC Function (1..17)	2	Channel (1..16)	1	NULL	n/a
				Key from Wireline	n/a	n/a	n/a

8		LLGT Detect	n/a	NULL	n/a	Dekey from Wireline	n/a
9	T4 if CH2 Conf	TRC Function (1..17)	3	Channel (1..16)	2	NULL	n/a
				Key from Wireline	n/a	n/a	n/a
10	T5 if CH3 Conf	TRC Function (1..17)	8	Channel (1..16)	3	NULL	n/a
				Key from Wireline	n/a	n/a	n/a

NOTICE: Table configurations are selected from the TABLE parameter. See Figure 126: CSS - WildCard Tables Example on page 293 for location of parameter fields.

8 For all Receiver Mute Configurations, click **Add** and populate the new WildCard table to mute external receivers:

Wild-Card Table	Descrip-tion	States and Condi-tion		Actions		Inactions	
		State	Value	Com-mand	Value	Com-mand	Value
11	Mute Ext RXs	Analog Wireline PTT	n/a	Set Out-put (1..12)	3	Clear Output (1..12)	3
				Set Out-put (1..12)	4	Clear Output (1..12)	4
				Set Out-put (1..12)	5	Clear Output (1..12)	5

9 For a T4-4R configuration, click **Add** and populate the new WildCard table to control channel 4, as follows

NOTICE: The description field is limited to 14 characters, including spaces.

WildCard Table	Descrip-tion	States and Condition		Actions		Inactions
		State	Value	Com-mand	Value	Com-mand
12		TRC Function (1..17)	9	Channel (1..16)	4	NULL
				Key from Wireline	n/a	

NOTICE: The function tones used in these tables must be correlated with the function tones set in the console.

10 From the menu, select **File** → **Write Configuration To Device**.

11 From the menu, select **Tools** → **Disconnect** to terminate the connection to the device.

12 Repeat steps 1–7 for all GPW 8000 Receivers.

NOTICE: Only the default WildCard tables are required for the GPW 8000 Receivers.

13 For GPW 8000 Receivers, edit TABLE 2 and change the **State and Conditions** from **Input 7** to **Input 4**.

14 From the menu, select **File** → **Write Configuration To Device**.

15 From the menu, select **Tools** → **Disconnect** to terminate the connection to the device.

A.2 T1-2R with Talk-Around Option Kit

The CA01957AA T1-2R with a Talk-Around option kit adds the capability of listening to the output transmit (Tx) frequency of the base radio when the base radio is not transmitting. This capability allows the console operator to listen to any talk-around (direct) operation. A GPW 8000 Receiver is used to monitor the output frequency.

A standalone T7039A GTR 8000 Base Radio is required. One GPW 8000 Receiver must be ordered without this option. This option kit includes one RF (transmit/receive) antenna relay, control cable, RF cables, and mounting hardware. The base radio must be ordered with the appropriate duplexer option.

All option kit hardware and cables required are included in Table 83: T1-2R with Talk-Around Option Kit Parts List on page 296.

Figure 127: T1-2R Talk-Around Option Kit Wiring Diagram

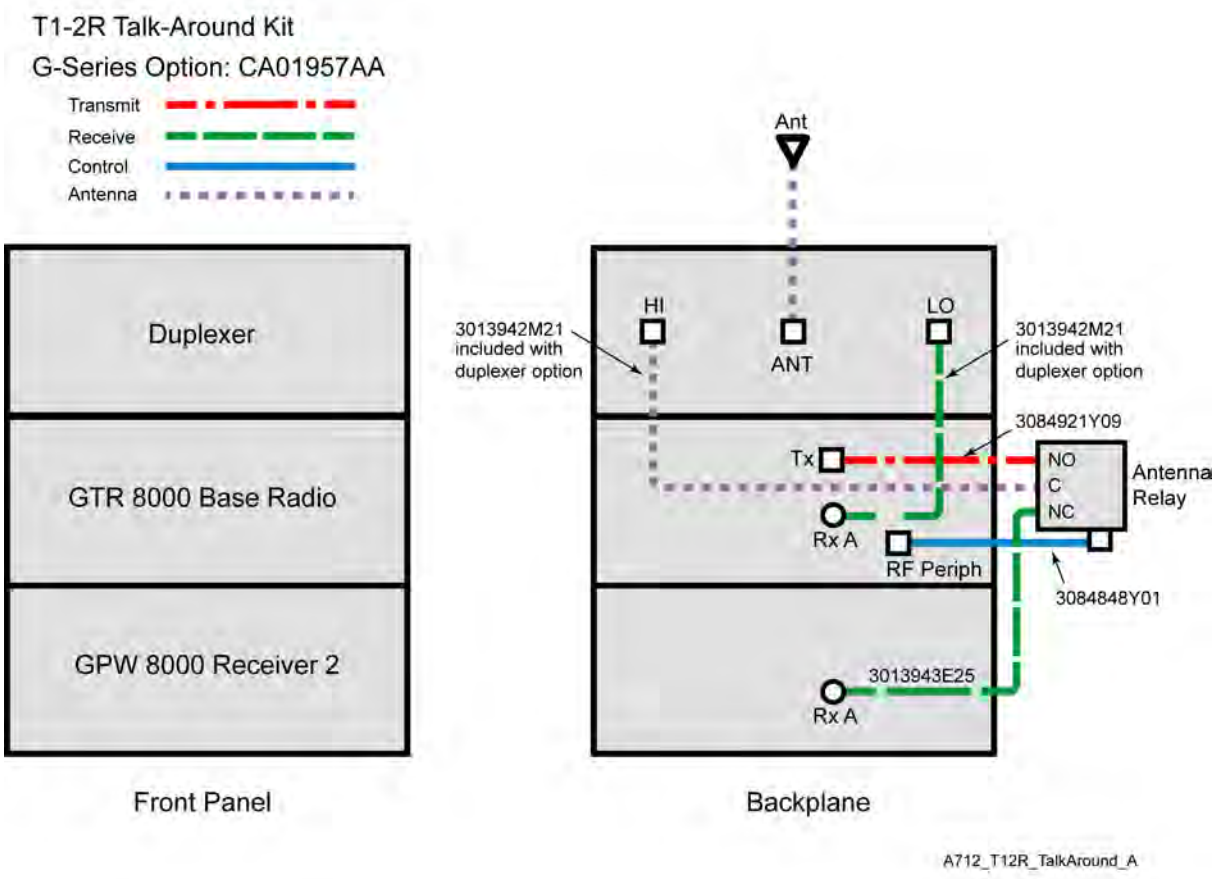

NOTICE: See System Connector Ports (Conventional) on page 112 for a detailed description of system connector pinouts.

NOTICE: The antenna relay is mounted on the backplane of the GTR 8000 Base Radio.

A.2.1

T1-2R with Talk-Around Option Kit Parts List

The required hardware and cables for the CA01957AA T1-2R with a Talk-Around option kit are listed in this section.

Table 83: T1-2R with Talk-Around Option Kit Parts List

FRU	Kit	Part Number	Description	Quantity
DLN6799A			**T1-2R W/TALKAROUND**	1
	CLN8792A		**HARDWARE, T1-2R W/TALKAROUND**	1
		0310909A54	SCREW 3.5X30 MM ANT RELAY MTG	2
		40009272002	RELAY, COAXIAL 29 V	1

FRU	Kit	Part Number	Description	Quanti-ty
		5682347B20	BAG FOR SCREWS	1
	CKN6945A		**CABLES, T1-2R W/TALKAROUND**	1
		3084921Y09	CBL, ASSY, COAX, 55CM, N-TO-QN	1
		4285026Y01	CLIP, CABLE RETAINER	1
		3013943E25	CBL N-BNC M-M 85CM	1
		3084848Y01	CABLE RELAY W/TEMP	1
		4210217A04	STRAP TIE .184X7.31 NYL BLK	10
		5682347B21	BAG, PLASTIC 584 X 431 MM	1
		SVCWARR12	12 MONTH STANDARD WARRANTY	1

A.2.2

Site Performance Expected for T1-2R with Talk-Around

The additional cables, splitter, and relay affect receiver sensitivity and transmitter output power. Use the attenuation values found in this section to determine the expected site performance. Other base radio and receiver specifications are not affected.

Table 84: Total Transmit and Receive Attenuation for T1-2R with Talk-Around

Band Type Attenuation	CA01957AA: T1-2R
VHF Rx 1	0.6 dB typical 0.8 dB maximum
VHF Rx 2	0.9 dB typical 1.1 dB maximum
VHF Tx	0.8 dB typical 1.0 dB maximum
UHF Rx1	0.8 dB typical 1.0 dB maximum
UHF Rx2	1.3 dB typical 1.5 dB maximum
UHF Tx	1.2 dB typical 1.4 dB maximum
800 MHz Rx1	0.9 dB typical 1.1 dB maximum
800 MHz Rx2	1.7 dB typical 1.9 dB maximum

Band Type Attenuation	CA01957AA: T1-2R
800 MHz Tx	1.5 dB typical 1.7 dB maximum

A.2.3

Installing the T1-2R with Talk-Around Option Kit

Procedure:

1. Install the standalone GTR 8000 Base Radio or GPW 8000 Receiver according to the processes and procedures provided in the Base Radio or Receiver Installation Chapter. Install a duplexer according to the appropriate “Replacing a Duplexer” procedure.

   WARNING: To guard against personal injury and/or damage to equipment, place the base radio to Service Mode when performing service. Transmit inhibiting the base radio within the Station Status screen in the Configuration/Service Software (CSS) also prevents the transmitter from keying. Remember to place the base radio back to Normal Mode when service is complete.

2. If the base radio and receiver are in Normal Mode, ensure that each device is placed in Service Mode, as follows:
   - **a** Connect to the transceiver module Ethernet service port using CSS. See Connecting Through an Ethernet Port Link on page 140.
   - **b** From the menu, select **File** → **Read Configuration From Device**.
   - **c** From the menu, select **Service** → **Test And Measurement Screen**.
   - **d** Click **Change to Service Mode**.
   - **e** At the confirmation screen, click **OK**.

     The device halts activity in the current mode and switches operation to the requested mode.
   - **f** Disconnect the Ethernet cable from the transceiver module Ethernet service port.
   - **g** Repeat for each device in the configuration.
3. If you choose to turn off the power, set the rocker switch on the front of the associated power supply to the Off (O) position.
4. Attach the antenna relay to the backplane of the GTR 8000 Base Radio. See the “Replacing an Antenna Relay” procedure for details.
5. Remove the fan module to gain access to the Transceiver Option Card (TOC) on the transceiver module. See Replacing the Fan Assembly on page 237 for details.
6. Connect cables to each device according to Figure 127: T1-2R Talk-Around Option Kit Wiring Diagram on page 296.
7. Replace the fan modules for the base radio and receivers.
8. If you chose to turn off the power, set the rocker switch on the front of the associated power supply to the On (I) position.
9. Place each base radio and receiver to Normal Mode, as follows:
   - **a** Connect to the transceiver module Ethernet service port using CSS. See Connecting Through an Ethernet Port Link on page 140.
   - **b** From the menu, select **File** → **Read Configuration From Device**.
   - **c** From the menu, select **Service** → **Test And Measurement Screen**.

d At the confirmation screen, click **OK**.

e Click **Change to Normal Mode**.

The device halts activity in the current mode and switches operation to the requested mode.

f Disconnect the Ethernet cable from the transceiver module Ethernet service port.

g Repeat for each device in the configuration.

A.2.4

Configuring the T1-2R with Talk-Around Option Kit

Prerequisites: Ensure that all required installation procedures have been performed for the base radio and receiver and that the devices have been powered up.

When and where to use: This procedure is used to configure the WildCard Tables for a T1-2R with Talk-Around configuration using the Configuration/Service Software (CSS).

Procedure:

1. If necessary, perform the initial configuration for the base radio. See Device Configuration in CSS on page 134for details.
2. Connect to the Ethernet port on the base radio. See Connecting Through an Ethernet Port Link on page 140 for details.
3. From the menu, select **File** → **Read Configuration From the Device**.
4. From the navigation pane, select **Hardware Configuration**. Set *Station Type [R]* to **Analog Only**.

   NOTICE: When configuring GPW 8000 Receivers, the **Hardware Platform [R]** parameter is set to **GPW 8000 Satellite Receiver**.

5. Set **Antenna Relay [R]** to **Enabled**.

   NOTICE: Use the default value of 30 msec for the Antenna Relay Delay.

6. From the navigation pane, select **WildCard Tables**. Click **Set to Default** to add default WildCard tables.
7. Click **Yes** to reset the WildCard Tables to their default structure. The following default WildCard Tables are created:

   NOTICE: WildCard Table numbers are arbitrary and shown for illustration purposes. Memory size and the number of States and Commands in each table limit the maximum number of WildCard tables.

Wild-Card Table	Description	States and Condition		Actions		Inactions	
		State	Value	Command	Value	Command	Value
1	In-cabinet RPT	Input 6	n/a	In-cabinet Repeat ON	n/a	In-Cabinet Repeat OFF	n/a
2	Rx Inhibit	Input 7	n/a	RX INHIBIT	n/a	RX ENABLE	n/a

3	External PTT	Input 5	n/a	Key from Wideband	n/a	Dekey from Wideband	n/a
4	RD STAT-RX ACT	RX Qualifiers Met	n/a	Set Output (1..12)	7	Clear Output (1..12)	7
5	Tx Inhibit	Input 3	n/a	TX INHIBIT	n/a	TX ENABLE	n/a
6		TRC Function Tone (1..17)	1	Monitor	n/a	NULL	n/a
7		TRC Function (1..17)	2	Channel (1..16)	1	NULL	n/a
				Key from Wireline	n/a	n/a	n/a
8		LLGT Detect	n/a	NULL	n/a	Dekey from Wireline	n/a
9	T4 if CH2 Conf	TRC Function (1..17)	3	Channel (1..16)	2	NULL	n/a
				Key from Wireline	n/a	n/a	n/a
10	T5 if CH3 Conf	TRC Function (1..17)	8	Channel (1..16)	3	NULL	n/a
				Key from Wireline	n/a	n/a	n/a

NOTICE: Table configurations are selected from the TABLE parameter. See Figure 126: CSS - WildCard Tables Example on page 293 for location of parameter fields.

8 From the menu, select **File** → **Write Configuration To Device**.

9 From the menu, select **Tools** → **Disconnect** to terminate the connection to the device.

10 Repeat steps 1–7 for all GPW 8000 Receivers.

NOTICE: Only the default WildCard tables are required for the GPW 8000 Receivers.

11 For GPW 8000 Receivers, edit TABLE 2 and change the *State and Conditions* from **Input 7** to **Input 4**.

12 From the menu, select **File** → **Write Configuration To Device**.

13 From the menu, select **Tools** → **Disconnect** to terminate the connection to the device.

A.3

T2-2R with Duplexer and Triple Relay Option Kit

The CA01962AA T2-2R with a Duplexer and Triple Relay option kit adds the capability to dynamically tune the TX frequency based on the active channel. The GTR 8000 Base Radio is a normal duplexed repeater while the GPW 8000 Receiver monitors the TX frequency. The other channel is for talk-around (transmit and receive). This option is sometimes called the triple relay option. A GPW 8000 Receiver is used to monitor the second frequency.

A standalone T7039A GTR 8000 Base Radio is required for this option kit. One GPW 8000 Receiver must be ordered without this option. This option kit includes 3 RF (transmit/receive) antenna relays, control cables, RF cables, and mounting hardware. The base radio must be ordered with the appropriate duplexer option.

All option kit hardware and cables required are included in Table 85: T2-2R with Duplexer and Triple Relay Option Kit Parts List on page 304.

NOTICE: The photos and illustrations in this section show the GPW 8000 Receiver with one chassis with one transceiver. A dual-slot chassis with two transceivers is available.

Figure 128: T2-2R with Duplexer and Triple Relay Configuration

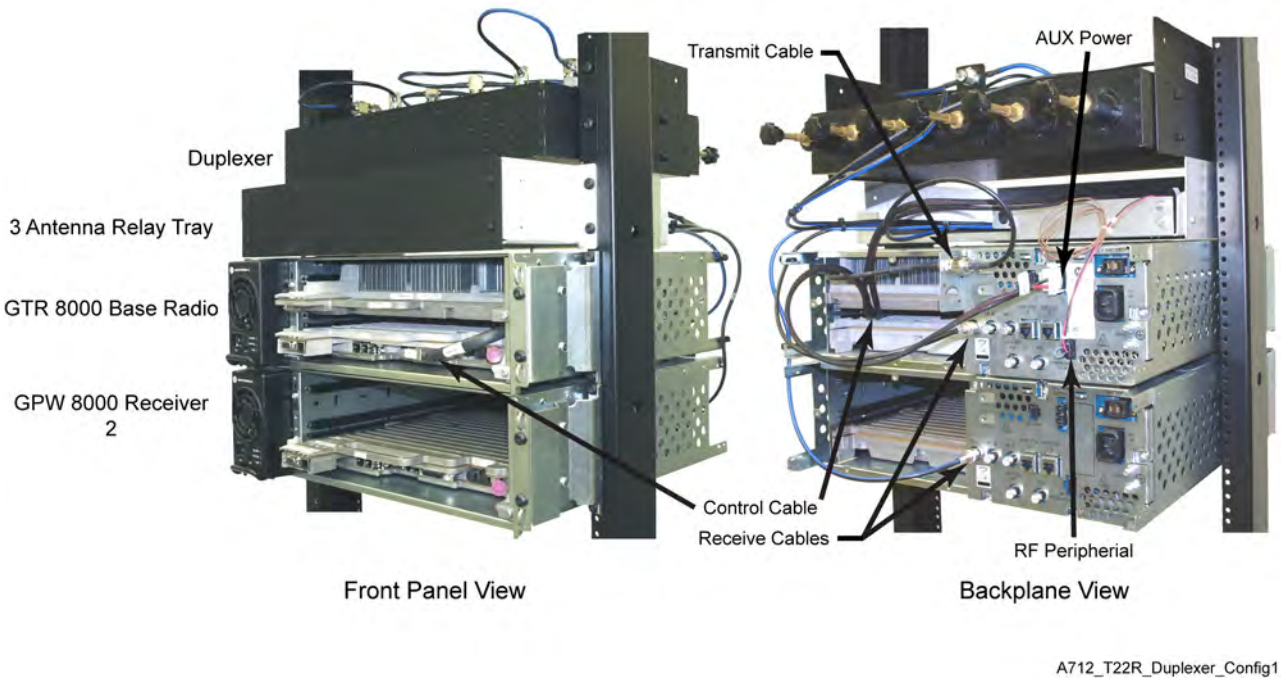

NOTICE: Base radio and receiver are shown without fan modules for clarity.

The triple antenna relay tray is illustrated to show the placement of the antenna relays:

Figure 129: Triple Antenna Relay Tray

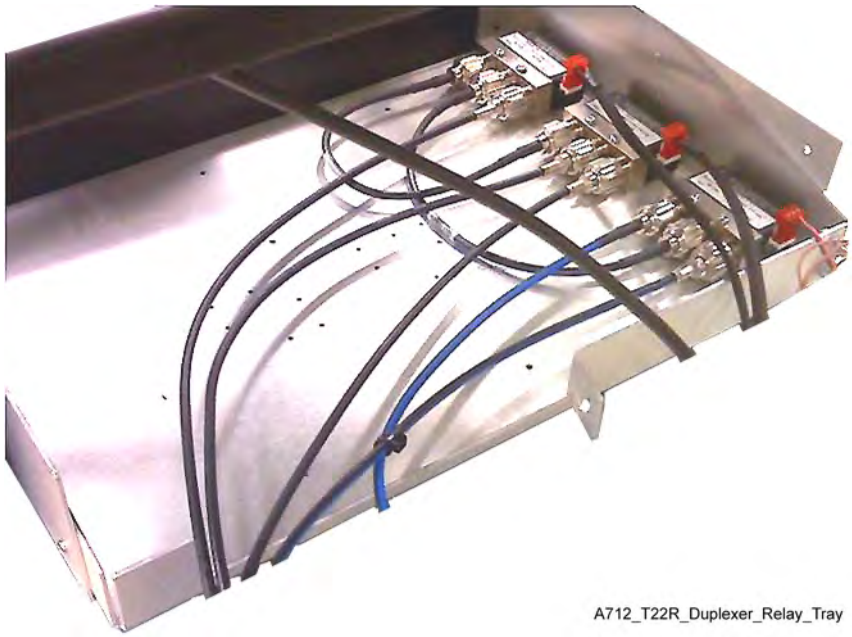

The wiring diagram for the T2-2R with a Duplexer and Triple Relay option kit outlines the connections for all cables and provides part numbers for each type.

Figure 130: T2-2R with Duplexer and Triple Relay Option Kit Wiring Diagram

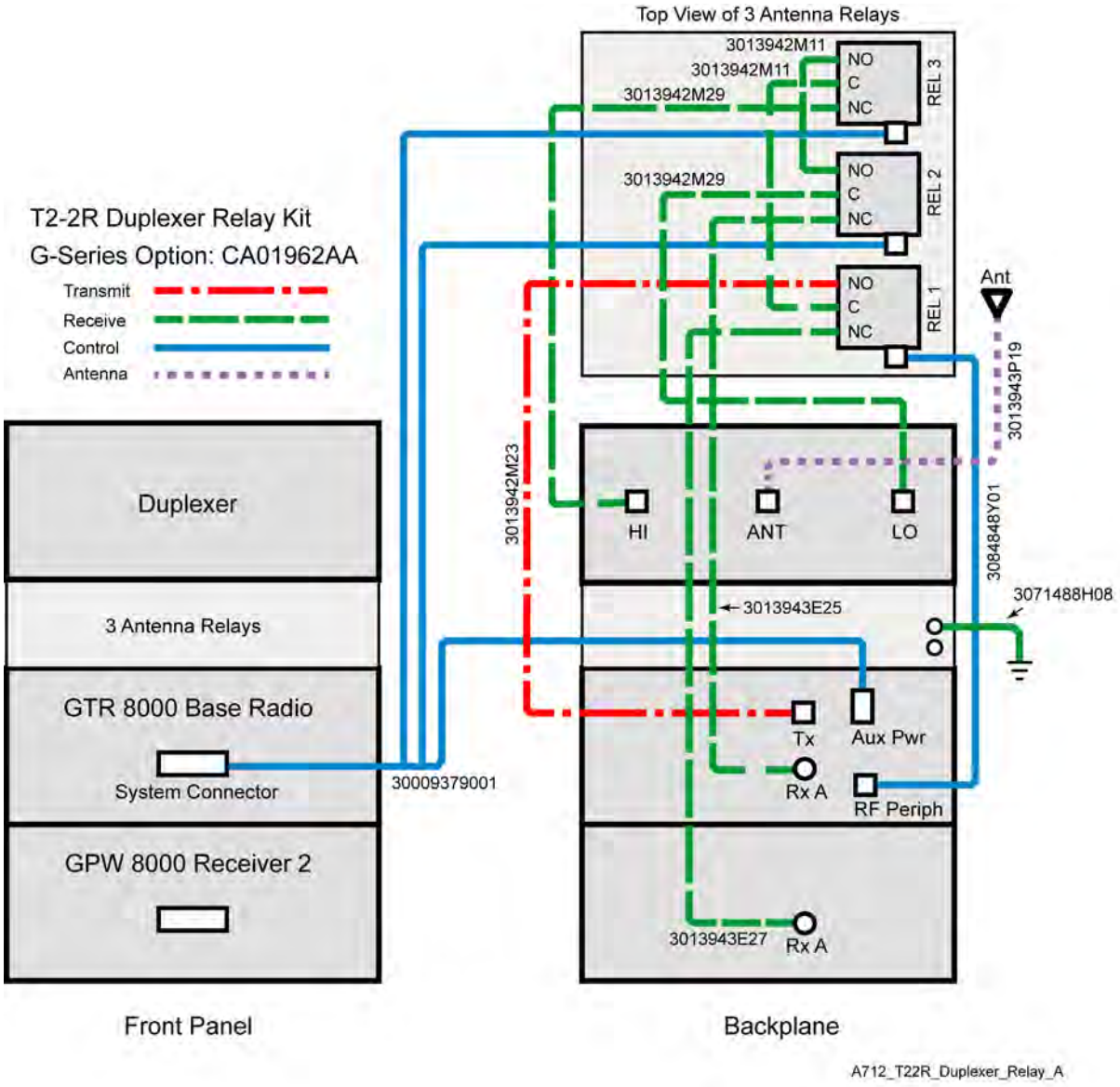

NOTICE: See System Connector Ports (Conventional) on page 112 for a detailed description of the system connector pinouts.

A.3.1

T2-2R with Duplexer and Triple Relay Option Kit Parts List

The required hardware and cables for the CA01962AA T2-2R with a Duplexer and Triple Relay option kit are listed in this section.

Table 85: T2-2R with Duplexer and Triple Relay Option Kit Parts List

FRU	Kit	Part Number	Description	Quantity
DLN6800A			**T2-2R DUPLXR AND TRPL RELAY**	1
	CLN8793A		**HARDWARE, T2-2R DUPLXR AND TRPL RELAY**	1
		0285854Y01	NUT, M6-GROUND WIRE TO STUDS ON TRAY	2
		0310909A54	SCREW 3.5X30MM ANT RELAY MTG	6
		0310909E46	SCRMCH M3.5X0.6X8 ANT CONN & SIDE BRKTS	20
		0312016A49	SCREW FRONT PANEL TO CHASSIS (blk)	4
		0312016A54	SCRTPG M6 X 1 X 10 (blk) TRAY TO RACK	4
		07009370001	BRACKET CHASSIS SUPPORT	2
		27009304001	CHASSIS, PERIPHERAL	1
		40009272002	RELAY, COAXIAL 29V	3
		5682347B20	BAG FOR SCREWS	1
		64009317001	PANEL, FRONT	1
		0285504U05	CAGE NUT, M6 FOR CABINET MTG	4
		0310909C91	SCREW M6-GROUND CABLE TO BUS BAR AND TRAY TO CABINET CAGE NUTS	5
	CKN6946A		**CABLES, T2-2R DUPLXR AND TRPL RELAY**	1
		30009379001	CABLE, TRIPLE RELAY	1
		3013942M11	CBL N-N M-M 32.5 CM	2
		3013942M23	CBL N-N M-M 75 CM	1
		3013942M29	CBL N-N M-M 110 CM	2
		3013942P19	CBL N-N M-F PNL 55 CM	1
		3013943E25	CBL N-BNC M-M 85 CM	1
		3013943E27	CBL N-BNC M-M 95 CM	1
		3084848Y01	CABLE RELAY W/TEMP	1
		3071488H08	CABLE, GROUND TRAY TO BUS BAR	1
		58009291001	Adapter, N Plug to BNC Jack	2

FRU	Kit	Part Number	Description	Quanti-ty
		4210217A04	STRAP TIE .184X7.31 NYL BLK	10
		5682347B21	BAG, PLASTIC 584 X 431 MM	1
		SVCWARR12	12 MONTH STANDARD WARRANTY	1

A.3.2

Site Performance Expected for T2-2R with Duplexer and Triple Relay

The additional cables, and relays affect receiver sensitivity and transmitter output power. Use the attenuation values found in this section to determine the expected site performance. Other base radio and receiver specifications are not affected.

Table 86: Total Transmit and Receive Attenuation for T2-2R with Duplexer and Triple Relay

Band Type Attenuation	CA01962AA: T2-2R
VHF Rx 1	1.0 dB typical 1.2 dB maximum
VHF Rx 2	1.2 dB typical 1.5 dB maximum
VHF Tx	1.4 dB typical 1.7 dB maximum
UHF Rx1	1.6 dB typical 1.8 dB maximum
UHF Rx2	1.9 dB typical 2.1 dB maximum
UHF Tx	2.0 dB typical 2.4 dB maximum
800 MHz Rx1	2.2 dB typical 2.5 dB maximum
800 MHz Rx2	2.6 dB typical 2.9 dB maximum
800 MHz Tx	2.9 dB typical 3.3 dB maximum

A.3.3
Installing the T2-2R with Duplexer and Triple Relay Option Kit

Procedure:

1. Install the standalone GTR 8000 Base Radio or GPW 8000 Receiver according to the processes and procedures provided in the Base Radio or Receiver Installation Chapter. Install a duplexer according to the appropriate “Replacing a Duplexer” procedure.

   WARNING: To guard against personal injury and/or damage to equipment, switch the base radio to Service Mode when performing service. Transmit inhibiting the base radio within the Station Status screen in the Configuration/Service Software (CSS) also prevents the transmitter from keying. Remember to switch the base radio back to Normal Mode when service is complete.

2. If the base radio and receiver are in Normal Mode, ensure that each device is placed to Service Mode, as follows:
   - **a** Connect to the transceiver module Ethernet service port using CSS. See Connecting Through an Ethernet Port Link on page 140.
   - **b** From the menu, select **File** → **Read Configuration From Device**.
   - **c** From the menu, select **Service** → **Test And Measurement Screen**.
   - **d** Click **Change to Service Mode**.
   - **e** At the confirmation screen, click **OK**.

     The device halts activity in the current mode and switches operation to the requested mode.
   - **f** Disconnect the Ethernet cable from the transceiver module Ethernet service port.
   - **g** Repeat for each device in the configuration.
3. If you choose to turn off the power, set the rocker switch on the front of the associated power supply to the Off (O) position.
4. Remove the fan module to gain access to the Transceiver Option Card (TOC) on the transceiver module. Replacing the Fan Assembly on page 237 for details.
5. Connect cables to each device according to Figure 130: T2-2R with Duplexer and Triple Relay Option Kit Wiring Diagram on page 303.

   NOTICE: When the GTR 8000 Base Radio or GPW 8000 Receiver is ordered with the preselector option, the type N to BNC adaptor (58009291001) must be used on the receiver end of RF cables.
6. Replace the fan modules for the base radio and receivers.
7. If you chose to turn off the power, set the rocker switch on the front of the associated power supply to the On (I) position.
8. Place the base radio and receivers to Normal Mode, as follows:
   - **a** Connect to the transceiver module Ethernet service port using CSS. See Connecting Through an Ethernet Port Link on page 140.
   - **b** From the menu, select **File** → **Read Configuration From Device**.
   - **c** From the menu, select **Service** → **Test And Measurement Screen**.
   - **d** Click **Change to Normal Mode**.
   - **e** At the confirmation screen, click **OK**.

     The device halts activity in the current mode and switches operation to the requested mode.

f Disconnect the Ethernet cable from the transceiver module Ethernet service port.

g Repeat for each device in the configuration.

A.3.4

Configuring the T2-2R with Duplexer and Triple Relay Option Kit

Prerequisites: Ensure that all required installation procedures have been performed for the base radio and receiver and that the devices have been powered up.

When and where to use: This procedure is used to configure a T2-2R with Duplexer and Triple Relay configuration using the Configuration/Service Software (CSS).

Procedure:

1. If necessary, perform the initial configuration for the base radio and receivers. See Device Configuration in CSS on page 134 for details.
2. Connect to the Ethernet port on the device. See Connecting Through an Ethernet Port Link on page 140 for details.
3. From the menu, select **File** → **Read Configuration From the Device**.
4. From the navigation pane, select **Hardware Configuration**. Set **Station Type [R]** to **Analog Only**.

   NOTICE: When configuring GPW 8000 Receivers, the **Hardware Platform [R]** parameter is set to **GPW 8000 Satellite Receiver**. The Antenna Relay [R] parameter is not configurable for GPW 8000 Receivers.
5. Set **Antenna Relay [R]** to **Enabled**.
6. Set **Antenna Relay Delay** to **80** msec.

   NOTICE: The 80 msec antenna rely delay is required to allow sufficient time for all antenna relays to propagate the transmission signal from the GTR 8000 Base Radio. This step is not required for GPW 8000 Receivers.
7. From the navigation pane, select **WildCard Tables**. Click **Set to Default** to add default WildCard tables.
8. Click **Yes** to reset the WildCard Tables to their default structure. The following default WildCard Tables are created:

   NOTICE: WildCard Table numbers are arbitrary and shown for illustration purposes. Memory size and the number of States and Commands in each table limit the maximum number of WildCard tables.

Wild-Card Table	Descrip-tion	States and Condi-tion		Actions		Inactions	
		State	Value	Com-mand	Value	Com-mand	Value
1	In-cabi-net RPT	Input 6	n/a	In-cabi-net Re-peat ON	n/a	In-Cabi-net Re-peat OFF	n/a
2	Rx In-hibit	Input 7	n/a	RX IN-HIBIT	n/a	RX EN-ABLE	n/a

3	External PTT	Input 5	n/a	Key from Wideband	n/a	Dekey from Wideband	n/a
4	RD STAT-RX ACT	RX Qualifiers Met	n/a	Set Output (1..12)	7	Clear Output (1..12)	7
5	Tx Inhibit	Input 3	n/a	TX INHIBIT	n/a	TX ENABLE	n/a
6		TRC Function Tone (1..17)	1	Monitor	n/a	NULL	n/a
7		TRC Function (1..17)	2	Channel (1..16)	1	NULL	n/a
				Key from Wireline	n/a	n/a	n/a
8		LLGT Detect	n/a	NULL	n/a	Dekey from Wireline	n/a
9	T4 if CH2 Conf	TRC Function (1..17)	3	Channel (1..16)	2	NULL	n/a
				Key from Wireline	n/a	n/a	n/a
10	T5 if CH3 Conf	TRC Function (1..17)	8	Channel (1..16)	3	NULL	n/a
				Key from Wireline	n/a	n/a	n/a

NOTICE: Table configurations are selected from the TABLE parameter. See Figure 126: CSS - WildCard Tables Example on page 293 for location of parameter fields.

9 Click **Add** and populate the new WildCard table, as follows:

Wild-Card Table	Description	States and Condition				Actions		Inactions	
		State	Value	Condition	State	Command	Value	Command	Value
11	Keyed on Channel	Current Channel (1..16)	2	AND	Station Keyed	WAIT (10..1000 msec)	80	Channel (1..16)	1
						Set Output (1..12)	7	WAIT (10..1000 msec)	80

						Clear Output (1..12)	7	

10 Click **Add** and populate the new WildCard table, as follows:

Wild-Card Table	De-scrip-tion	States and Condition			Actions			Inac-tions
		State	Value	Condi-tion	State	Com-mand	Value	Com-mand
12	De-keyed on Ch	Cur-rent Chan-nel (1..16)	2	AND NOT	Station Keyed	Set Output (1..12)	7	NULL

11 Click **Add** and populate the new WildCard table, as follows:

Wild-Card Table	De-scrip-tion	States and Condition			Actions			Inac-tions
		State	Value	Condi-tion	State	Com-mand	Value	Com-mand
13	De-keyed on Ch	Cur-rent Chan-nel (1..16)	1	AND NOT	Station Keyed	Clear Output (1..12)	7	NULL

12 From the menu, select **File** → **Write Configuration To Device**.

13 From the menu, select **Tools** → **Disconnect** to terminate the connection to the device.

14 Repeat steps 1–8 for all GPW 8000 Receivers.

NOTICE: Only the default WildCard tables are required for the GPW 8000 Receivers.

15 For GPW 8000 Receivers, edit TABLE 2 and change the *State and Conditions* from **Input 7** to **Input 4**.

16 From the menu, select **File** → **Write Configuration To Device**.

17 From the menu, select **Tools** → **Disconnect** to terminate the connection to the device.