INSTRUCTION MANUALS

Excerpts from the instruction and service manuals for this base radio are available and have been included as part of the filing package in the form of an electronic pdf document.

Upon request, published and/or printed manuals will be sent to the commission and/or telecommunication certification body (TCB). All of the descriptions and schematics included this filing package are up to date.

TUNE-UP PROCEDURE

There is no field tune-up procedure. All adjustments are software controlled and are pre-set at the factory. Certain station operating parameters can be changed via man-machine interface (MMI) commands, within predetermined limits. Examples include transmit / receiver operating frequencies and power level.

Technical Manual

iDEN

Enhanced Base Transceiver System (EBTS)

Volume 2 of 3
Base Radios

68P80801E35-E

16-June-06

MOTOROLA
intelligence everywhere™

RF SUB-SYSTEM

Notice to Users

No part of this publication, or any software included with it, may be reproduced, stored in a retrieval system, or transmitted in any form or by any means, including but not limited to, photocopying, electronic, mechanical, recording or otherwise, without the express prior written permission of the copyright holder. Motorola, Inc. provides this document "AS IS" without warranty of any kind, either expressed or implied, including but not limited to, the implied warranties of merchantability and fitness for a particular purpose. Motorola reserves the rights to make changes or improvements in the equipment, software, or specifications described in this document at any time without notice. These changes will be incorporated in new releases of this document.

Computer Software Copyrights

The Motorola and 3rd Party supplied Software ("SW") products described in this instruction manual may include copyrighted Motorola and other 3rd Party supplied computer programs stored in semiconductor memories or other media. Laws in the United States and other countries preserve for Motorola and other 3rd Party supplied SW certain exclusive rights for copyrighted computer programs, including the exclusive right to copy or reproduce in any form of the copyrighted computer program. Accordingly, any copyrighted Motorola or other 3rd Party supplied SW computer programs contained in the Motorola products described in this instruction manual may not be copied, reverse engineered, or reproduced in any manner without the express prior written permission of Motorola or the 3rd Party SW supplier. Furthermore, the purchase of Motorola products shall not be deemed to grant, either directly or by implication, estoppel, or otherwise, any license under the copyrights, patents or patent applications of Motorola or other 3rd Party supplied SW, except for the normal non-exclusive, royalty free license to use that arises by operation of law in the sale of a product.

Use and Disclosure Restrictions

The software described in this document is the property of Motorola, Inc. It is furnished under a duly executed license agreement and may be used and/or disclosed only in accordance with the terms of the said agreement.

The software and documentation contained in this publication are copyrighted materials. Making unauthorized copies is prohibited by law. No part of the software or documentation may be reproduced, transmitted, transcribed, stored in a retrieval system, or translated into any language or computer language, in any form or by any means, without the express prior written permission of Motorola, Inc.

Trademarks

MOTOROLA, the Stylized M Logo, iDEN, and Message Mail are trademarks or registered trademarks of Motorola, Inc. in the United States and other countries.

All other product or services mentioned in this document are identified by the trademarks or service marks of their respective companies or organizations, and Motorola, Inc. disclaims any responsibility for specifying their ownership. Any such marks are used in an editorial manner, to the benefit of the owner, with no intention of infringement.

While reasonable efforts have been made to assure the accuracy of this document, this document may contain technical or typographical errors or omissions. Motorola, Inc. and its subsidiaries and affiliates disclaim responsibility for any labor, materials, or costs incurred by any person or party as a result of using this document. Motorola, Inc., any of its subsidiaries or affiliates shall not be liable for any damages (including, but not limited to, consequential, indirect, incidental, or special damages or loss of profits or data) even if they were foreseeable and Motorola has been informed of their potential occurrence, arising out of or in connection with this document or its use. Motorola, Inc. reserves the right to make changes without notice to any products or services described herein and reserves the right to make changes from time to time in content of this document and substitute the new document therefor, with no obligation to notify any person or party of such changes or substitutions.

© 2006 - Motorola, Inc. All Rights Reserved REV 12/15/06

Contact Information

Motorola, Inc.
Networks business
1501 Shure Dr.
Arlington Heights, IL 60004
U.S.A

SPECIFICATIONS ARE SUBJECT TO CHANGE WITHOUT NOTICE.

About This Volume

Volume 2 of the Enhanced Base Transceiver System (EBTS) manual, Base Radios, provides the experienced service technician with an overview of the EBTS operation and functions, and contains information regarding the 800 MHz, 900 MHz, 800/900 MHz QUAD Channel, and 800/900 MHz QUAD+2 Channel base radios.

The EBTS has three major components:

- Generation 3 Site Controller (Gen 3 SC) or integrated Site Controller (iSC)
- Base Radios (BRs)
- RF Distribution System (RFDS)

Installation and testing is described in Volume 1, *System Installation and Testing*, and RFDS are described in Volume 3, *RF Distribution Systems (RFDS)*. Detailed information about the Gen 3 SC is contained in the *Gen 3 SC Supplement Manual, 68P80801E30*. Detailed information about the iSC is contained in the *iSC Supplement Manual, 68P81098E05*

The information in this manual is current as of the printing date. If changes to this manual occur after the printing date, they will be documented and issued as Schaumburg Manual Revisions (SMRs).

Audience Profile

Audience Profile

The target audience of this document includes field service technicians responsible for installing, maintaining, and troubleshooting the EBTS.

In keeping with Motorola's field replaceable unit (FRU) philosophy, this manual provides sufficient functional information to the FRU level. Please refer to the appropriate section of this manual for removal and replacement instructions.

Related Manuals

The following publications may be required to supplement the information contained in this manual:

Number	Title	Description
68P80801E30	Generation 3 Site Controller (Gen 3 SC) - System Manual	Provides detailed information about the Gen 3 SC including a description of major subsystems, components, installation, testing, troubleshooting, and other information
68P81098E05	Integrated Site Controller (iSC) System Manual	Provides detailed information about the iSC including a description of major subsystems, components, installation, testing, troubleshooting, and other information.
68P81089E50	Motorola Standards and Guidelines for Communications Sites	A useful reference for the installation of fixed network equipment. This manual provides guidelines and procedures to ensure the quality of Motorola radio equipment installation, integration, optimization, and maintenance. Field service personnel should be familiar with the guidelines and procedures contained in this publication.
6881131E90	iDEN Guide to Motorola Acronyms and Terms	A useful reference for Motorola used Acronyms and Terms.

Customer Network Resolution Center

The Customer Network Resolution Center (CNRC) is a integral part of the network support process.

Before performing any major changes or optimization on the system, please contact the CNRC. Notify the CNRC with the nature of the change and the schedule for the change. This will allow CNRC to have the correct technical support engineers on call in case they are needed.

Please refer to the *Customer Guide to iDEN Customer Network Resolution Center (CNRC)* (WP2000-003) for more information regarding:

- Procedures for calling CNRC
- Classification of trouble tickets
- The escalation processes

This document is located on the iDEN extranet website at the URL:

http://mynetworksupport.motorola.com

The CNRC can be contacted at the following telephone numbers:

Domestic

(800) 499-6477

International

Brazil: 0-800-891-5895
Mexico: 001-800-499-6477
Peru: 0-800-52-121
Colombia: 01-800-700-1614
Argentina: 0-800-666-1559
China: 10-800-130-0617
Singapore: 800-1301-285
Philippines: 1-800-1-116-0119
Korea: 00-308-13-1358

All other International locations:

1+847-704-9800

Manuals On-line

This manual is available on the World Wide Web at *mynetworksupport*, the iDEN customer site. This site was created to provide secure access to critical iDEN Infrastructure information. This web site features a library of iDEN Infrastructure technical documentation such as bulletins, system release documents and product manuals.

The documents are located on the secured extranet website at the URL:

https://mynetworksupport.motorola.com

For information on obtaining an account on this site, go to:

https://membership.motorola.com/motorola

Reporting Manual Errors

If you locate an error or identify a deficiency in this manual, please take the time to contact us at the following email address:

tpid23@motorola.com

Be sure to include your name, fax or phone number, the complete manual title and part number, the page number where the error is located, and any comments you may have regarding what you have found.

Thank you for your time. We appreciate any comments from the users of our manuals.

Conventions

Software

- submenu commands—`Table ▷ Table Designer`
- new terms—**mobile subscriber**
- keystrokes—**Ctrl+Alt+Delete, Return**
- mouse clicks—click, double-click
- user input—Type **delete**
- screen output—`DAP is starting....`

Hardware

- CD-ROM

Safety

This manual contains safety notices (alerts). Alerts are based on the standards that apply to graphics on Motorola equipment. Specific procedural notices are stated in the procedures as required and have specific visual representations. The representations are:

DANGER

INDICATES AN IMMINENTLY HAZARDOUS SITUATION WHICH, IF NOT AVOIDED, WILL RESULT IN DEATH OR SERIOUS INJURY.

WARNING

Indicates a potentially hazardous situation which, if not avoided, could result in death or serious injury.

CAUTION

Indicates a potentially hazardous situation which, if not avoided, could result in minor or moderate injury.

CAUTION

Without the alert symbol indicates a potentially hazardous situation which, if not avoided, may result in property damage.

Important **Indicates an item of the essence of a topic that is indispensable.**

Note Indicates something of notable worth or consequence.

Product Specific Safety Notices

The specific procedural safety precautions are stated in the procedures and are also listed here.

General Safety

Important **Remember Safety depends on you!!**

General safety precautions must be observed during all phases of operation, service, and repair of the equipment described in this manual. Failure to comply with these precautions or with specific warnings elsewhere in this manual violates safety standards of design, manufacture, and intended use of the equipment.

You must heed the safety precautions and warnings listed in the product manuals for your equipment. Any individual using or maintaining the product(s), should follow these warnings and all other safety precautions necessary for the safe operation of the equipment in your operating environment. Motorola, Inc. assumes no liability for failure to comply with these requirements.

Keep Away From Live Circuits

DANGER

HAZARDOUS VOLTAGE, CURRENT, AND ENERGY LEVELS ARE PRESENT IN THIS PRODUCT. POWER SWITCH TERMINALS CAN HAVE HAZARDOUS VOLTAGES PRESENT EVEN WHEN THE POWER SWITCH IS OFF. DO NOT OPERATE THE SYSTEM WITH THE COVER REMOVED. ALWAYS REPLACE THE COVER BEFORE TURNING ON THE SYSTEM.

Operating personnel must:

- Not remove equipment covers. Only Factory Authorized Service Personnel or other qualified maintenance personnel may remove equipment covers for internal subassembly, or component replacement, or any internal adjustment.
- Not replace components with power cable connected. Under certain conditions, dangerous voltages may exist even with the power cable removed.
- Always disconnect power and discharge circuits before touching them.

Ground the Equipment

To minimize shock hazard, the equipment chassis and enclosure must be connected to an electrical earth ground. The power cable must be either plugged into an approved three-contact electrical outlet or used with a three-contact to two-contact adapter. The three-contact to two-contact adapter must have the grounding wire (green) firmly connected to an electrical ground (safety ground) at the power outlet. The power jack and mating plug of the power cable must meet International Electrotechnical Commission (IEC) safety standards.

Electro-Static Discharge

Motorola strongly recommends that you use an anti-static wrist strap and a conductive foam pad when installing or upgrading the system. Electronic components, such as disk drives, computer boards, and memory modules, can be extremely sensitive to Electro-Static Discharge (ESD). After removing the component from the system or its protective wrapper, place the component flat on a grounded, static-free surface, and in the case of a board, component-side up. Do not slide the component over any surface.

If an ESD station is not available, always wear an anti-static wrist strap that is attached to an unpainted metal part of the system chassis. This will greatly reduce the potential for ESD damage.

Do Not Operate In An Explosive Atmosphere

Do not operate the equipment in the presence of flammable gases or fumes. Operation of any electrical equipment in such an environment constitutes a definite safety hazard.

Do Not Service Or Adjust Alone

Do not attempt internal service or adjustment, unless another person, capable of rendering first aid and resuscitation, is present.

Use Caution When Exposing Or Handling a Cathode-Ray Tube

Breakage of the Cathode-Ray Tube (CRT) causes a high-velocity scattering of glass fragments (implosion). To prevent CRT implosion, avoid rough handling or jarring of the equipment. The CRT should be handled only by qualified maintenance personnel, using approved safety mask and gloves.

Do Not Substitute Parts Or Modify Equipment

Because of the danger of introducing additional hazards, do not install substitute parts or perform any unauthorized modification of equipment. Contact Motorola Warranty and Repair for service and repair to ensure that safety features are maintained.

Introduction

Introduction

The procedures described in this section assume the field technician or installer has knowledge of the installation techniques contained in the *Quality Standards Fixed Network Equipment - Installation Manual (Motorola Standards and Guidelines for Communication Sites "R56" (68P81089E50))*.

Note Prior to performing the installation procedures, prepare the site with all associated antennas, phone lines, and other related site equipment. This information is covered in the *Pre-Installation* section of this manual.

General Safety Precautions

Important **Compliance with FCC guidelines for human exposure to Electromagnetic Energy (EME) at Transmitter Antenna sites generally requires that Personnel working at a site shall be aware of the potential for exposure to EME and can exercise control of exposure by appropriate means, such as adhering to warning sign instructions, using standard operating procedures (work practices), wearing personal protective equipment, or limiting the duration of exposure. For more details and specific guidelines, see Appendix A of the R56 Standards and Guidelines for Communications Sites (68P81089E50) manual.**

Observe the following general safety precautions during all phases of operation, service and repair of the equipment described in this manual. Follow the safety precautions listed below and all other warnings and cautions necessary for the safe operation of all equipment. o Refer to the appropriate section of the product service manual for additional pertinent safety information. o Because of the danger of introducing additional hazards, do not install substitute parts or perform any unauthorized modifications of equipment.

The installation process requires preparation and knowledge of the site before installation begins. Review installation procedures and precautions in the *Motorola Standards and Guidelines for Communication Sites "R56" (68P81089E50)* before performing any site or component installation.

Always follow all applicable safety procedures, such as Occupational Safety and Health Administration (OSHA) requirements, National Electrical Code (NEC) requirements, local code requirements, safe working practices, and good judgment must be used by personnel. General safety precautions include the following:

- Read and follow all warning notices and instructions marked on the product or included in this manual before installing, servicing, or operating the equipment.
- Retain these safety instructions for future reference.

- If troubleshooting the equipment while power is on, be aware of the live circuits.
- Do not operate the radio transmitters unless all RF connectors are secure and all connectors are properly terminated.
- All equipment must be properly grounded in accordance with the *Motorola Standards and Guidelines for Communication Sites "R56" (68P81089E50)* and specified installation instructions for safe operation.
- Slots and openings in the cabinet are provided for ventilation. Do not block or cover openings that protect the devices from overheating.
- Only a qualified technician familiar with similar electronic equipment should service equipment.
- Some equipment components can become extremely hot during operation. Turn off all power to the equipment and wait until sufficiently cool before touching.
- Have personnel call in with their travel routes to help ensure their safety while traveling between remote sites.
- Institute a communications routine during certain higher risk procedures where the on-site technician continually updates management or safety personnel of the progress so that help can be dispatched if needed.
- Never store combustible materials in or near equipment racks. The combination of combustible material, heat and electrical energy increases the risk of a fire safety hazard.
- Equipment shall be installed in site meeting the requirements of a "restricted access location," per UL60950-1, which is defined as follows: "Access can only be gained by service persons or by user who has been warned about the possible burn hazard on equipment metal housing. Access to the equipment is through the use of a tool or lock and key, or other means of security, and is controlled by the authority responsible for the location."

CAUTION

Burn hazard. The metal housing of product may become extremely hot. Use caution when working around the equipment.

CAUTION

All Tx and Rx RF cables' outer shields must be grounded per Motorola R56 requirements.

CAUTION

DC input voltage shall be no higher than 60VDC. This maximum voltage shall include consideration of the battery charging "float voltage" associated with the intended supply system, regardless of the marked power rating of the equipment. Failure to follow this guideline may result in electric shock.

CAUTION

All Tx and Rx RF cables shall be connected to a surge protection device according to Motorola R56 documents. Do not connect Tx and Rx RF cables directly to outside antenna.

Overview

This chapter provides an overview of the 800 MHz Legacy, 800 MHz Generation 2 Single Channel, 800 MHz and 900 MHz QUAD Channel, and 800/900 MHz QUAD+2 Base Radios (BRs) along with technical information.

FRU Number to Kit Number Cross Reference

Table 1-1 FRU Number to Kit Number Cross Reference

Description	FRU Number	Kit Number
Single Channel 800 MHz BRC	TLN3334	CLN1469
Single Channel BRC (MCI)	TLN3425	CLN1472
Enhanced Base Radio Controller	DLN6446	CLN1653
900 MHz QUAD Channel EX/CNTL	DLN1203	CLF6242
800 MHz QUAD Channel EX/CNTL	CLN1497	CLF1560
800/900 MHz QUAD+2 Channel XCVR	DLN6654	PCUF1001

The Single Carrier Base Radio section covers the 800 MHz Legacy and 800 MHz Generation 2 versions of the Base Radio (BR). Information is presented generally for all models. Information that is model specific noted in the text.

For Generation 2 BR, both the 800 MHz Exciter and the 800 MHz Low Noise Exciter modules are supported subject to Table 1-5.

For QUAD Channel 800 MHz BR use, all Single Carrier BR modules have undergone redesign. Therefore, Single Carrier BR modules are incompatible with the QUAD Channel 800 MHz BR. QUAD Channel 800 MHz BR modules are incompatible with the Single Carrier BR.

Note Do not attempt to insert QUAD Channel 800 MHz BR modules into a Single Carrier BR or Single Carrier BR modules into a QUAD Channel 800 MHz BR.

Note For QUAD Channel 900 MHz BR use, all Single Carrier BR modules are incompatible with the 900 MHz QUAD Channel BR. 900 MHz QUAD Channel BR modules are incompatible with the Single Carrier BR.

Note Do not attempt to insert QUAD Channel 900 MHz BR modules into a Single Carrier BR or Single Carrier BR modules into a QUAD Channel 900 MHz BR.

QUAD Channel 900 MHz Base Radio Overview

The QUAD Channel 900 MHz BR provides reliable, digital BR capabilities in a compact, software-controlled design. Voice compression techniques, time division multiplexing (TDM) and multi-carrier operation provide increased channel capacity.

The QUAD Channel 900 MHz BR contains the four FRUs listed below:

- QUAD Channel 900 MHz EX /Cntl
- QUAD Channel 900 MHz Power Amplifier
- QUAD Channel 800 MHz and 900 MHz Power Supply (DC)
- QUAD Channel 900 MHz Receiver (qty. 4)

The modular design of the QUAD Channel 900 MHz BR also offers increased shielding and provides easy handling. All FRUs connect to the backplane through blindmate connectors.

Note Both the 800 MHz QUAD and 900 MHz QUAD Base Radios use the same backplane and cardcage but call out different FCC ID numbers.

Figure 1-3 shows the front view of the BR.

Figure 1-3 QUAD Channel 900 MHz Base Radio (Typical)

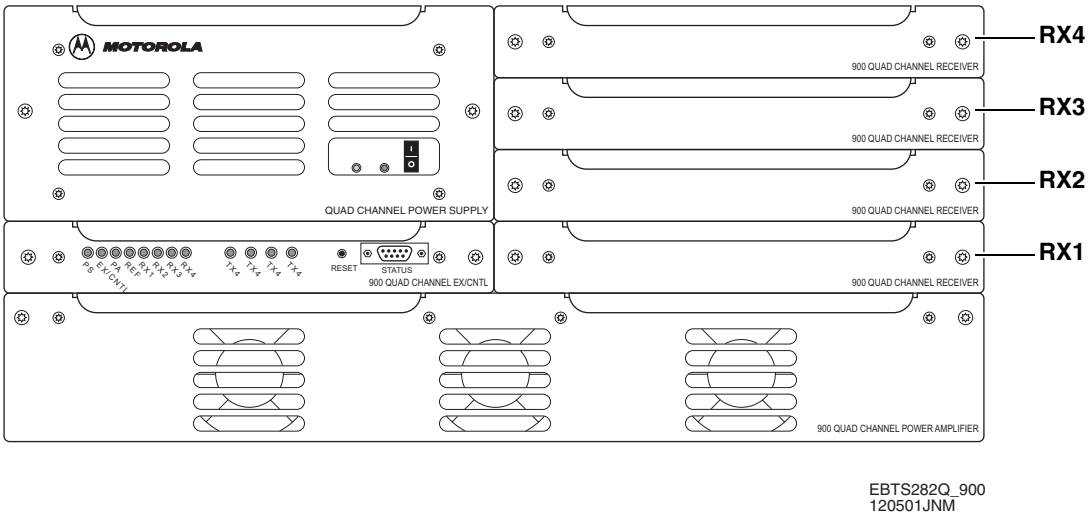

QUAD Channel 900 MHz Base Radio Controls and Indicators

Power Supply and EX / CNTL controls and indicators monitor BR status and operating conditions, and also aid in fault isolation. The Power Supply and EX / CNTL sections of this chapter discuss controls and indicators for both modules.

The Power Supply has two front panel indicators. The EX / CNTL has twelve front panel indicators. The Power Supply power switch applies power to the BR. The EX / CNTL RESET switch resets the BR.

QUAD Channel 900 MHz Base Radio Performance Specifications

QUAD Channel 900 MHz Base Radio General Specifications

Table 1-9 lists general specifications for the BR.

Table 1-9 QUAD Channel 900 MHz BR General Specifications

Specification	Value or Range
Dimensions: Height Width Depth Weight	 5 EIA Rack Units (RU) 19" (482.6 mm) 16.75" (425 mm) 85 lbs. (38.6 kg)
Operating Temperature	32° to 104° F (0° to 40° C)
Storage Temperature	-22° to 140° F (-30° to 60° C)
Rx Frequency Range: 900 MHz iDEN	 901 - 902 MHz
Tx Frequency Range: 900 MHz iDEN	 940 - 941 MHz
Tx – Rx Spacing: 900 MHz iDEN	 39 MHz
Carrier Spacing	25 kHz
Carrier Capacity*	1, 2, 3 or 4
Frequency Generation	Synthesized
Digital Modulation	QPSK, M-16QAM, and M-64QAM
Power Supply Inputs: VDC	 -48 VDC (-41 to -60 VDC)
Diversity Branches	Up to 3

Note * Multi-carrier operation must utilize adjacent, contiguous RF carriers.

QUAD Channel 900 MHz Base Radio Transmit Specifications

Table 1-10 lists the BR transmit specifications.

Table 1-10 QUAD Channel 900 MHz BR Transmit Specifications

Specification	Value or Range	
Average Power Output:	Low average output power per carrier	High average output power per carrier
(900 MHZ) Single Carrier	5.0W	52.0W
(900 MHz) Dual Carrier	2.5W	26.0W
(900 MHz) Triple Carrier	1.7W	16.1W
(900 MHz) QUAD Carrier	1.3W	10.5W
Transmit Bit Error Rate (BER)	0.01%	
Occupied Bandwidth	18.5 kHz	
Frequency Stability *	1.5 ppm	
RF Input Impedance	50 Ω (nom.)	
FCC Designation (FCC Rule Part 24): 900 MHz QUAD BR	ABZ89FC5798-P	

Note * Transmit frequency stability locks to an external site reference, which controls ultimate frequency stability to a level of 50 ppb.

QUAD Channel 900 MHz Base Radio Receive Specifications

Table 1-11 lists the receive specifications.

Table 1-11 QUAD Channel 900 MHz Receive Specifications

Specification	Value or Range
Static Sensitivity †: 900 MHz BR	-108 dBm (BER = 8%)
BER Floor (BER = 0.01%)	≥ -80 dBm
IF Frequencies 1st IF (All bands): 2nd IF:	 73.35 MHz (1st IF) 450 kHz (2nd IF)
Frequency Stability *	1.5 ppm

Table 1-11 QUAD Channel 900 MHz Receive Specifications

Specification	Value or Range
RF Input Impedance	50 Ω (nom.)
FCC Designation (FCC Rule Part 15): 900 MHz BR	ABZ89FR5799

Note † Measurement referenced from single receiver input port of BR.

Note * Stability without site reference connected to station. Receive frequency stability locks to an external site reference, which controls ultimate frequency stability to a level of 50 ppb.

QUAD Channel 900 MHz Base Radio Theory of Operation

The QUAD Channel 900 MHz BR operates with other site controllers and equipment and must be properly terminated. The following description assumes such a configuration. Figure 1-10 show an overall block diagram of the QUAD Channel 900 MHz BR.

Power is applied to the DC Power inputs located on the QUAD Channel 900 MHz BR backplane. The DC Power input is connected if -48 VDC or batteries are used in the site.

Power is applied to the BR by setting the Power Supply power switch to the ON position. Upon power-up, the QUAD Channel 900 MHz BR performs self-diagnostic tests to ensure the integrity of the unit. These tests, which include memory and Ethernet verification routines, primarily examine the EX / CNTL.

After completing self-diagnostic tests, the QUAD Channel 900 MHz BR reports alarm conditions on any of its modules to the site controller via Ethernet. Alarm conditions may also be verified locally. Local verification involves using the service computer and the STATUS port located on the front of the QUAD Channel 900 MHz EX / CNTL.

The software resident in FLASH on the EX / CNTL registers the BR with the site controller via Ethernet. After BR registration on initial power-up, the BR software downloads via resident FLASH or Ethernet and executes from RAM. The download includes operating parameters for the QUAD Channel 900 MHz BR. These parameters allow the QUAD Channel 900 MHz BR to perform call processing functions.

After software downloads to the BR via Ethernet, FLASH memory stores the software object. Upon future power-ups, the software object in FLASH loads into RAM for execution.

The BR operates in a TDMA (Time Division Multiple Access) mode. This mode, combined with voice compression techniques, increases channel capacity by a ratio of as much as six to one. TDMA divides both the receive and transmit signals of the BR into six individual time slots. Each receive slot has a corresponding transmit slot. This pair of slots comprises a logical RF channel.

The BR uses diversity reception for increased coverage area and improved quality. The Receiver modules within the QUAD Channel 900 MHz BR contain three receiver paths. Two-branch diversity sites use two Receiver paths, and three-branch diversity sites use three Receiver paths.

All Receiver paths within a given Receiver module are programmed to the same receive frequency. Signals from each receiver arrive at the EX / CNTL module. This module performs a diversity combining algorithm on the signals. The resultant signal undergoes an error-correction process. Then, via Ethernet, the site controller acquires the signal, along with control information about signal destination.

Two separate FRUs comprise the transmit section of the QUAD Channel 900 MHz BR. These are the Exciter portion of the EX / CNTL and the Power Amplifier (PA). The Exciter processes commands from the CNTL, assuring transmission in the proper modulation format. Then the low-level signal enters the PA. The PA amplifies this signal to the desired output power level. The PA is a continuously keyed linear amplifier. A power control routine monitors the output power of the BR. The routine adjusts the power as necessary to maintain the proper output level.

Figure 1-10 800 and 900 MHZ QUAD Channel Base Radio Functional Block Diagram

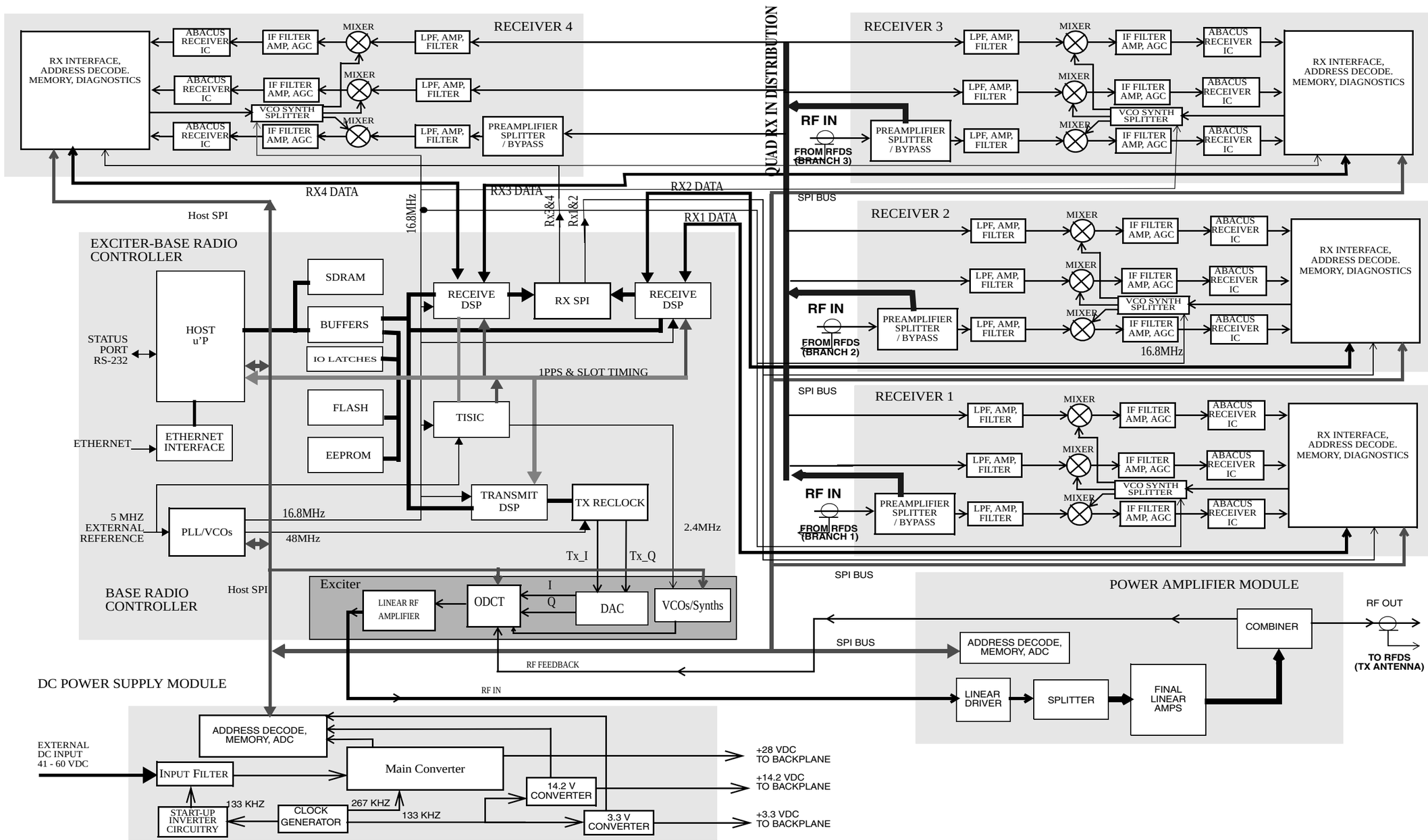

Overview

This chapter provides information on Base Radio Controllers (BRCs).

FRU Number to Kit Number Cross Reference

Base Radio Controller (BRC) Field Replaceable Units (FRUs) are available for the iDEN EBTS. The FRU contains the BRC kit and required packaging. Table 2-1 provides a cross reference between BRC FRU numbers and kit numbers.

Table 2-1 FRU Number to Kit Number Cross Reference

Description	FRU Number	Kit Number
Single Channel 800 MHz Base Radio Controller	TLN3334	CLN1469
Enhanced Base Radio Controller	DLN6446	CLN1653
QUAD Channel 900 MHz Exciter/BR Controller	DLN1203	CLF1792
QUAD Channel 800 MHz Exciter/BR Controller	CLN1497	CLF1560

900 MHz QUAD Channel Base Radio Controller

900 MHz QUAD Channel Base Radio Controller Overview

The Base Radio Controller (BRC) provides signal processing and operational control for Base Radio modules. The BRC module consists of a printed circuit board, a slide-in housing, and associated hardware.

The BRC memory contains the operating software and codeplug. The software defines BR operating parameters, such as output power and operating frequency.

The BRC connects to the Base Radio backplane with one 168-pin FutureBus+ connector and one blindmate RF connector. Two Torx screws secure the BRC in the Base Radio chassis.

Figure 2-6 shows a top view of the EX/CNTL (model CLF1560) with the cover removed.

Figure 2-6 900 MHz QUAD Channel Base Radio Controller, version DLN1203 (with cover removed)

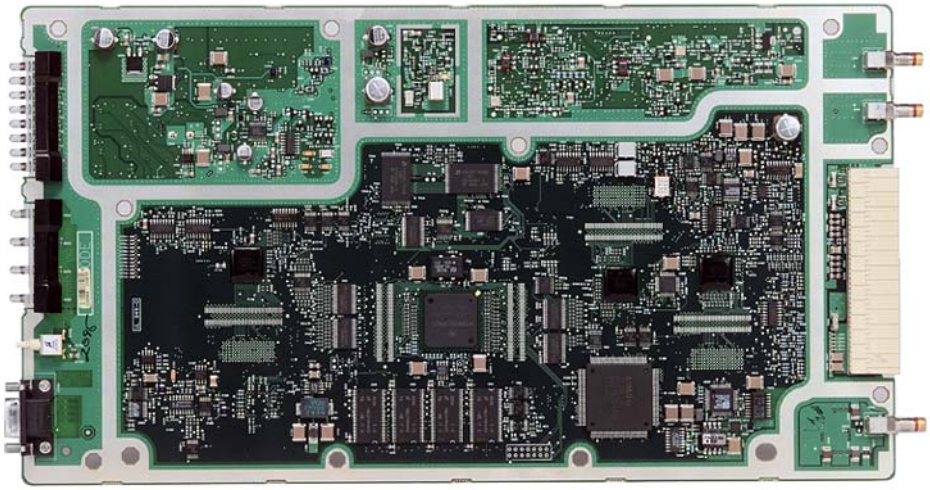

900 MHz QUAD Channel Base Radio Controller Controls and Indicators

The BRC monitors the functions of other Base Radio modules. The LEDs on the front panel indicate the status of BRC-monitored modules. All LEDs on the BRC front panel normally flash three times upon initial power-up. A RESET switch allows a manual reset of the Base Radio. Figure 2-7 shows the front panel of the BRC.

Figure 2-7 900 MHz QUAD Channel BR Controller (Front View)

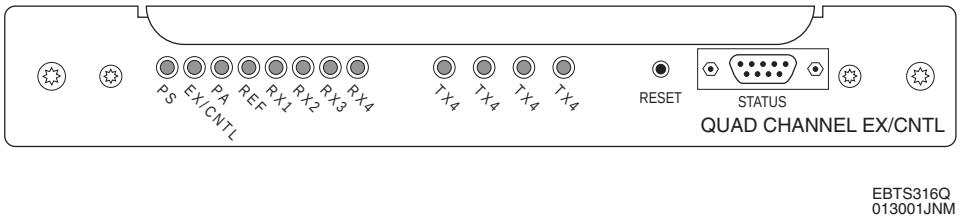

Indicators

Table 2-12 lists and describes the BRC LEDs.

Table 2-12 900 MHz QUAD Channel BR Controller Indicators

LED	Color	Module Monitored	Condition	Indications
PS	Red	Power Supply	Solid (on)	FRU failure indication - Power Supply has a major alarm, and is out of service
			Flashing (on)	Power Supply has a minor alarm, and may be operating at reduced performance
			Off	Power Supply is operating normally (no alarms)
EXBRC	Red	Controller/ Exciter	Solid (on)	FRU failure indication - Controller/Exciter has a major alarm, and is out of service (Note: Upon power-up of the BR, this LED indicates a failed mode until BR software achieves a known state of operation.)
			Flashing (on)	Controller/Exciter has a minor alarm, and may be operating at reduced performance
			Off	Controller/Exciter is operating normally (no alarms)
PA	Red	Power Amplifier	Solid (on)	FRU failure indication - PA has a major alarm, and is out of service
			Flashing (on)	PA has a minor alarm, and may be operating at reduced performance
			Off	PA is operating normally (no alarms)

900 MHz QUAD Channel Base Radio Controller

Table 2-12 900 MHz QUAD Channel BR Controller Indicators (continued)

LED	Color	Module Monitored	Condition	Indications
REF	Red	Controller Station Reference	Solid (on)	FRU failure indication - Controller Station Reference has a major alarm, and is out of service
			Flashing (on)	BRC has a minor alarm, and may be operating in a marginal region
			Off	BRC is operating normally (no alarms)
RX1 RX2 RX3 RX4	Red	Receiver #1, #2, #3, or #4	Solid (on)	FRU failure indication - Receiver (#1, #2, #3 or #4) has a major alarm, and is out of service
			Flashing (on)	Receiver (#1, #2, #3 or #4) has a minor alarm, and may be operating at reduced performance
			Off	Receiver (#1, #2, #3 or #4) is operating normally (no alarms)
TX1	Green	BR	Solid (on)	Station Transmit Carrier #1 is keyed
			Flashing (on)	Station Transmit Carrier #1 is not keyed
			Off	Station is out of service, or power is removed
TX2	Green	BR	Solid (on)	Station Transmit Carrier #2 is keyed
			Flashing (on)	Station Transmit Carrier #2 is not keyed
			Off	Station is out of service, or power is removed
TX3	Green	BR	Solid (on)	Station Transmit Carrier #3 is keyed
			Flashing (on)	Station Transmit Carrier #3 is not keyed
			Off	Station is out of service, or power is removed
TX4	Green	BR	Solid (on)	Station Transmit Carrier #4 is keyed
			Flashing (on)	Station Transmit Carrier #4 is not keyed
			Off	Station is out of service, or power is removed

Controls

Table 2-13 lists the controls and descriptions.

Table 2-13 900 MHz QUAD Channel BR Controller Controls

Control	Description
RESET Switch	A push-button switch used to manually reset the BR.
STATUS connector	A 9-pin connector used for connection of a service computer, providing a convenient means for testing and configuring.

STATUS Connector

Table 2-14 the pin-outs for the STATUS connector.

Table 2-14 Pin-outs for the STATUS Connector

Pin-out	Signal
1	not used
2	TXD
3	RXD
4	not used
5	GND
6	not used
7	not used
8	not used
9	not used

900 MHz QUAD Channel Base Radio Controller Theory of Operation

Table 2-15 briefly describes the BRC circuitry. Figure 2-14 is a functional block diagram of the BRC.

Table 2-15 900 MHz QUAD Channel BR Controller Circuitry

Circuit	Description
Host Microprocessor	Contains integrated circuits that comprise the central controller of the BRC and station
Non-Volatile Memory	Consists of: FLASH containing the station operating software EEPROM containing the station codeplug data
Volatile Memory	Contains SDRAM to store station software used to execute commands.
Ethernet Interface	Provides the BRC with a 10Base2 Ethernet communication port to network both control and compressed voice data
RS-232 Interface	Provides the BRC with an RS-232 serial interface
Digital Signal Processors	Performs high-speed modulation/demodulation of compressed audio and signaling data
TISIC	Contains integrated circuits that provide timing reference signals for the station
TX Reclock	Contains integrated circuits that provide highly stable, reclocked transmit signals and peripheral transmit logic
RX DSP SPI	Contains integrated circuits that provide DSP SPI capability and peripheral receive logic
Station Reference Circuitry	Generates the 16.8 MHz and 48 MHz reference signals used throughout the station
Input Ports	Contains 16 signal input ports that receive miscellaneous inputs from the BR
Output Ports	Contains 40 signal output ports, providing a path for sending miscellaneous control signals to circuits throughout the BR
Remote Station Shutdown	Provides software control to cycle power on the BR

Host Microprocessor

The host microprocessor is the main controller for the BR. The processor operates at a 50-MHz clock speed. The processor controls Base Radio operation according to station software in memory. Station software resides in FLASH memory. For normal operation, the system transfers this software to non-volatile memory. An EEPROM contains the station codeplug.

Note At BR power-up, the EXBRC LED indicates a major alarm. This indication continues until BR software achieves a predetermined state of operation. Afterward, the software turns off the EXBRC LED.

Serial Communication Buses

The microprocessor provides a general-purpose SMC serial management controller bus.

The SMC serial communications bus is an asynchronous RS-232 interface with no hardware handshake capability. The BRC front panel includes a nine-pin, D-type connector. This connector provides a port where service personnel may connect a service computer. Service personnel can perform programming and maintenance tasks via Man-Machine Interface (MMI) commands. The interface between the SMC port and the front- panel STATUS connector is via EIA-232 Bus Receivers and Drivers.

Host Processor

The microprocessor incorporates 4k bytes of instruction cache and 4k bytes of data cache that significantly enhance processor performance.

The microprocessor has a 32-line address bus. The processor uses this bus to access non-volatile memory and SDRAM memory. Via memory mapping, the processor also uses this bus to control other BRC circuitry.

The microprocessor uses its Chip Select capability to decode addresses and assert an output signal. The eight chip-select signals select non-volatile memory, SDRAM memory, input ports, output ports, and DSPs.

The Host processor...

- Provides serial communications between the Host Microprocessor and other Base Radio modules.
- Provides condition signals necessary to access SDRAM.
- Accepts interrupt signals from BRC circuits (such as DSPs).
- Organizes the interrupts, based on hardware-defined priority ranking.
- The Host supports several internal interrupts from its Communications Processor Module. These interrupts allow efficient use of peripheral interfaces.
- The Host supports 10 Mbps Ethernet/IEEE 802.3.

- Provides a 32-line data bus transfers data to and from BRC SDRAM and other BRC circuitry. Buffers on this data bus allow transfers to and from non-volatile memory, general input and output ports and DSPs.

Non-Volatile Memory

Base Radio software resides in 2M x 32 bits of FLASH memory. The Host Microprocessor addresses the FLASH memory with 20 of the host address bus' 32 lines. The host accesses FLASH data over the 32-line host data bus. A host-operated chip-select line provides control signals for these transactions.

The FLASH contains the operating system and application code. The system stores application code in FLASH for fast recovery from reset conditions. Application code transfers from network or site controllers may occur in a background mode. Background mode transfers allow the station to remain operational during new code upgrades.

The data that determines the station personality resides in a 32K x eight bit codeplug EEPROM. The microprocessor addresses the EEPROM with 15 of the host address bus' 32 lines. The host accesses EEPROM data with eight of the data bus' 32 lines. A host-operated chip-select line provides control signals for these transactions.

During the manufacturing process, the factory programs the codeplug's default data. The BRC must download field programming data from network and site controllers. This data includes operating frequencies and output power level. The station permits adjustment of many station parameters, but the station does not store these adjustments. Refer to the Software Commands chapter for additional information.

Volatile Memory

Each BRC contains 8MB x 32 bits of SDRAM. The BRC downloads station software code into SDRAM for station use. SDRAM also provides short-term storage for data generated and required during normal operation. SDRAM is volatile memory. A loss of power or system reset destroys SDRAM data.

The system performs read and write operations over the Host Address and Data buses. These operations involve column and row select lines under control of the Host processor's DRAM controller. The Host address bus and column row signals sequentially refresh SDRAM memory locations.

Ethernet Interface

The Host processor's Communications Processor Module (CPM) provides the Local Area Network (LAN) Controller for the Ethernet Interface. The LAN function implements the CSMA/CD access method, which supports the IEEE 802.3 10Base2 standard.

The LAN coprocessor supports all IEEE 802.3 Medium Access Control, including the following:

- framing
- preamble generation
- stripping
- source address generation
- destination address checking

The PCM LAN receives commands from the CPU.

The Ethernet Serial Interface works directly with the CPM LAN to perform the following major functions:

- 10 MHz transmit clock generation (obtained by dividing the 20 MHz signal provided by on-board crystal)
- Manchester encoding/decoding of frames
- electrical interface to the Ethernet transceiver

An isolation transformer provides high-voltage protection. The transformer also isolates the Ethernet Serial Interface (ESI) and the transceiver. The pulse transformer has the following characteristics:

- Minimum inductance of 75 μH
- 2000 V isolation between primary and secondary windings
- 1:1 Pulse Transformer

The Coaxial Transceiver Interface (CTI) is a coaxial cable line driver and receiver for the Ethernet. CTI provides a 10Base2 connection via a coaxial connector on the board. This device minimizes the number of external components necessary for Ethernet operations.

A DC/DC converter provides a constant voltage of -9 Vdc for the CTI from a 3.3 Vdc source.

The CTI performs the following functions:

- Receives and transmits data to the Ethernet coaxial connection
- Reports any collision that it detects on the coaxial connection
- Disables the transmitter when packets are longer than the legal length (Jabber Timer)

Digital Signal Processors

The BRC includes two Receive Digital Signal Processors (RXDSPs) and a Transmit Digital Signal Processor (TXDSP). These DSPs and related circuitry process compressed station transmit and receive audio or data. The related circuitry includes the TDMA Infrastructure Support IC (TISIC) and the TISIC Interface Circuitry. The DSPs only accept input and output signals in digitized form.

The RXDSP inputs are digitized receiver signals. The TXDSP outputs are digitized voice audio and data (modulation signals). These signals pass from the DSP to the Exciter portion of the EXBRC. DSPs communicate with the Microprocessor via an eight-bit, host data bus on the host processor side. For all DSPs, interrupts drive communication with the host.

The RXDSPs operate from an external 16.8 MHz clock, provided by the local station reference. The RXDSP internal operating clock signal is 150MHz, produced by an internal Phase-Locked Loop (PLL).

The RXDSPs accept digitized signals from the receivers through Enhanced Synchronous Serial Interface (ESSI) ports. Each of two ESSI ports on a RXDSP supports a single carrier (single receiver) digital data input. The DSP circuitry includes two RXDSPs. These allow processing of up to four carriers (four receivers).

The RXDSP accesses its DSP program and signal-processing algorithms in 128k words of internal memory. The RXDSPs communicate with the host bus over an 8-bit interface.

Each RXDSP provides serial communications to its respective receiver module for receiver control via a Serial Peripheral Interface (SPI). The SPI is a parallel-to-serial conversion circuit, connected to the RXDSP data bus. Each RXDSP communicates to two receive modules through this interface.

Additionally, a serial control path connects the two RXDSPs and the TXDSP. The Synchronous Communications Interface (SCI) port facilitates this serial control path.

For initialization and control purposes, one RXDSP connects to the TISIC device.

The TXDSP operates at an external clock speed of 16.8 MHz, provided by the EXBRC local station reference. The TXDSP internal operating clock is 150MHz, produced by an internal Phase Lock Loop (PLL).

The TXDSP sends up to four carriers of digitized signal to the EX11 exciter. The exciter converts the digital signal to analog. Also at the exciter, a highly stable clock reclocks the digital data. Reclocking enhances transmit signal integrity. Two framed and synchronized data streams result. One data stream is I-data, and the other is the Q-data stream.

The TXDSP contains its own, internal address and data memory. The TXDSP can store 128k words of DSP program and data memory. An eight-bit interface handles TXDSP-to-host bus communications.

TISIC

The TISIC controls internal DSP operations. This circuit provides the following functions:

- For initialization and control, interfaces with one RXDSP via the DSP address and data buses.
- Accepts a 16.8 MHz signal from Station Reference Circuitry.
- Accepts a 5 MHz signal, modulated with one pulse per second (1 PPS) from the site reference.
- Demodulates the 1 PPS
- Outputs a 1 PPS signal and a windowed version of this signal for network timing alignment.
- Outputs a 2.4 MHz reference signal used by the Exciter.
- Generates 15 ms and 7.5 ms ticks. (These ticks synchronize to the 1 PPS time mark. The system decodes the time mark from the site reference. Then the system routes the reference to the TXDSP and RXDSPs.)

Station Reference Circuitry

The Station Reference Circuitry is a phase-locked loop (PLL). This PLL consists of a high-stability, Voltage-Controlled, Crystal Oscillator (VCXO) and a PLL IC. GPS output from the iSC connects to the 5 MHz/1 PPS BNC connector on the BR backplane. Wiring at this connector routes signals to EXBRC station reference circuitry.

The PLL compares the 5 MHz reference frequency to the 16.8 MHz VCXO output. Then the PLL generates a DC correction voltage. The PLL applies this correction voltage to the VCO through an analog gate. The analog gate closes when three conditions coexist: (1) The 5 MHz tests stable. (2) The PLL IC is programmed. (3) Two PLL oscillator and reference signal output alignments occur.

When the gate enables, the control voltage from the PLL can adjust the high-stability VCXO frequency. The adjustment can achieve a stability nearly equivalent to that of the external, 5 MHz frequency reference.

The correction voltage from the PLL continuously adjusts the VXCO frequency. The VXCO outputs a 16.8 MHz clock signal. The circuit applies this clock signal to the receiver, 48 MHz reference and TISIC.

The receivers use the 16.8MHz as the clock input and synthesizer reference.

The 48 MHz EXBRC synthesizer uses the 16.8 MHz as its synthesizer reference. The 48 MHz synthesizer output is the clock input for the TXDSP I and Q data reclock circuitry.

The TISIC divides the 16.8 MHz signal by seven, and outputs a 2.4 MHz signal. This output signal then becomes the 2.4 MHz reference for the Exciter.

Input Ports

One general-purpose input register provides for BRC and station circuit input signals. The register has 16 input ports. The Host Data Bus conveys input register data to the Host Microprocessor. Typical inputs include 16.8 and 48 MHz Station Reference Circuitry status outputs and reset status outputs.

Output Ports

Two general-purpose output registers distribute control signals from the Host Microprocessor to the BRC and station circuitry. One register has 32 output ports and the other register has 8 output ports. Control signal distribution occurs over the backplane. The Host Data Bus drives the output ports' latched outputs. Typical control signals include front-panel LED signals and SPI peripheral enable and address lines.

Remote Station Shutdown

The BRC contains power supply shutdown circuitry. This circuitry can send a shutdown pulse to the Base Radio Power Supply. BRC software generates the shutdown control pulse.

After receiving a shutdown pulse, the power supply turns off BR power. Shut down power sources include 3.3, 28.6 and 14.2 Vdc sources throughout the BR. Due to charges retained by BR storage elements, power supply voltages may not reach zero. The shutdown only assures that the host processor enters a power-on-reset state.

A remote site uses the shutdown function to perform a hard reset of all BR modules.

Figure 2-14 800 and 900 MHz QUAD Channel Base Radio Controller Functional Block Diagram (Sheet 1 of 2)

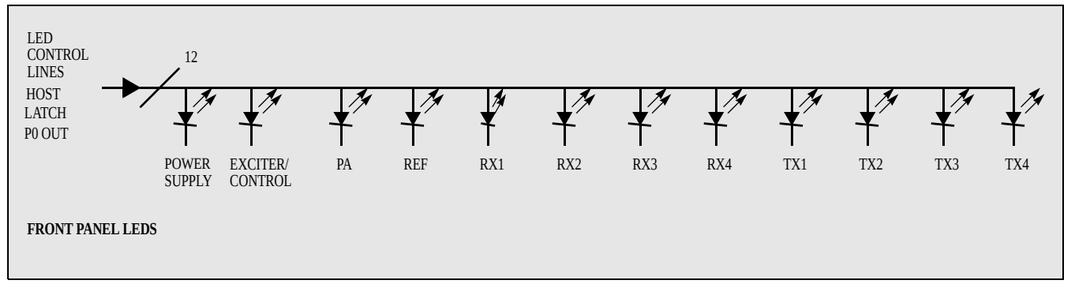

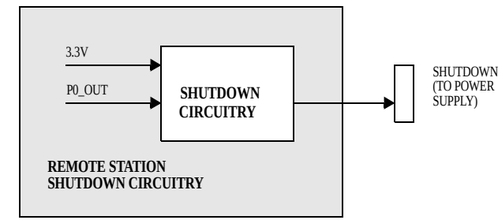

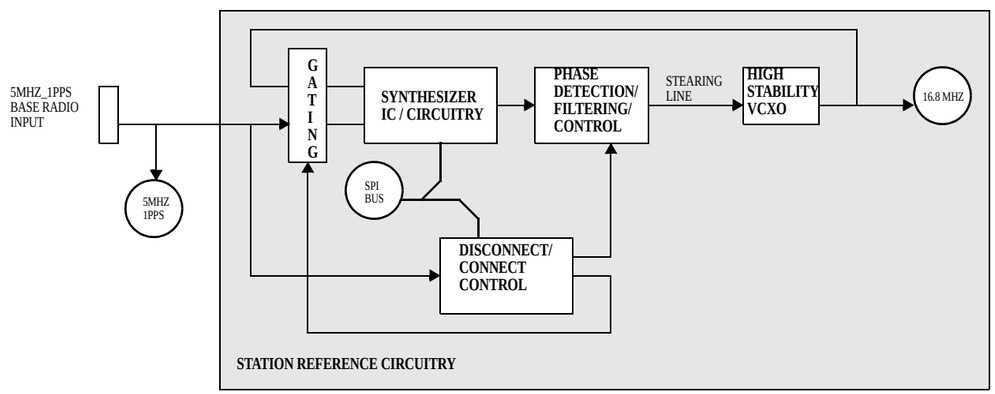

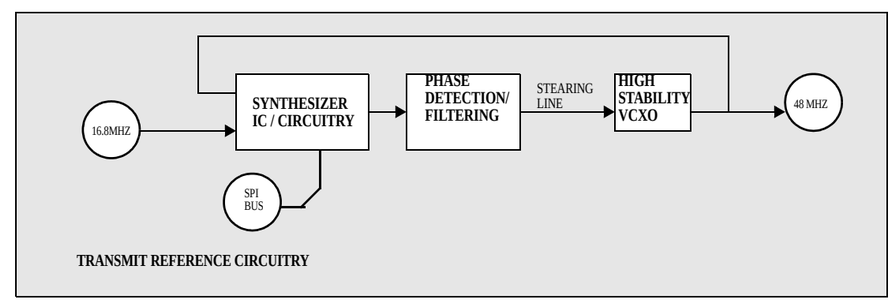

Figure 2-15 800 and 900 MHz QUAD Channel Base Radio Controller Functional Block Diagram (Sheet 2 of 2)

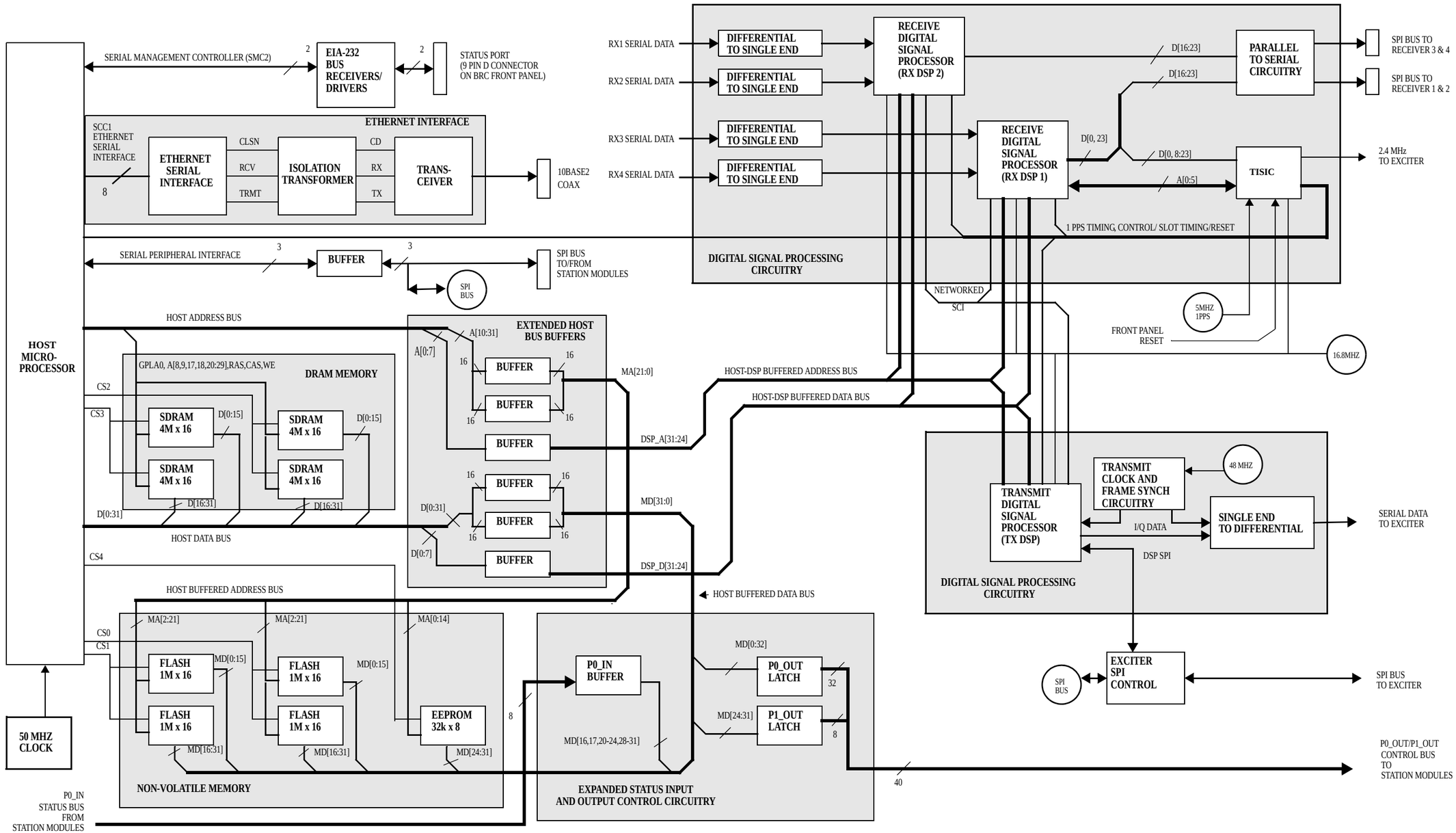

Overview

This chapter provides technical information for the Exciter (EX).

FRU Number to Kit Number Cross Reference

Exciter Field Replaceable Units (FRUs) are available for the iDEN EBTS. The FRU contains the Exciter kit and required packaging. Table 4-1 provides a cross reference between Exciter FRU numbers and kit numbers.

Table 4-1 FRU Number to Kit Number Cross Reference

Description	FRU Number	Kit Number
Single Channel Exciter (800 MHz)	TLN3337	CLF1490
QUAD Channel 900 MHz Exciter/Base Radio Controller)	CLN1497	CLF6452
QUAD Channel 800 MHz Exciter/Base Radio Controller	CLN1497	CLF1560
LNODCT (Low Noise Offset Direct Conversion Transmit) Exciter (800 MHz)	TLN3337	CLF1789

QUAD Channel 900 MHz Exciter

QUAD Channel 900 MHz Exciter Overview

The Exciter and the Power Amplifier (PA) provide the transmitter functions of the QUAD Channel 900 MHz Base Radio. The Exciter module consists of a printed circuit board, a slide in housing, and associated hardware. The BRC shares the printed circuit board and housing.

The Exciter connects to the Base Radio backplane through a 168-pin connector and two blindmate RF connectors. Controller and exciter circuitry also interconnect on the Exciter/Controller module. Two Torx screws on the front of the Exciter secure it to the chassis.

An LED identifies the Exciter's operational condition, as described in the manual's Controller section. The Base Radio section of the manual provides specifications for transmitter circuitry. This information includes data on the Exciter and PAs.

Figures 4-4 shows the Exciter with the cover removed.

Figure 4-3 900 MHz QUAD Channel Exciter (with cover removed)

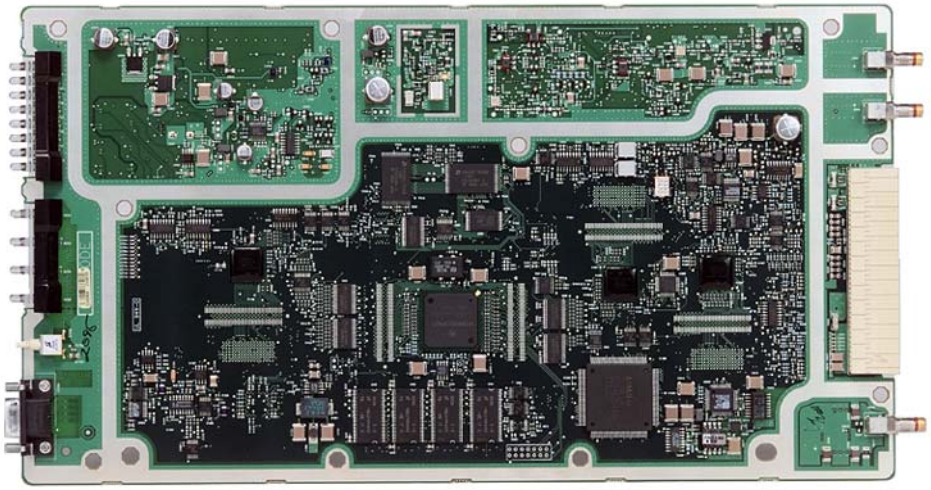

900 MHz QUAD Channel Exciter Theory of Operation

Table 4-4 describes the basic circuitry of the Exciter. Figure 4-7 show the QUAD Carrier Exciter's functional block diagram.

Table 4-4 900 MHz Exciter Circuitry

Circuit	Description
LNODCT IC	Up-converts baseband data to the transmit frequency Down-converts the PA feedback signal to baseband Uses a baseband Cartesian feedback loop system, necessary to obtain linearity from the transmitter and avoid splattering power into adjacent channels Performs training functions for proper linearization of the transmitter
Memory & A/D Converter	Serves as the main interface between the synthesizer, Tranlin IC, A/D, and EEPROM on the Exciter, and the BRC via the SPI bus
Frequency Synthesizer Circuitry	Consists of a phase-locked loop and VCO Provides a LO signal to the LNODCT IC for the second up-conversion and first down-conversion of the feedback signal from the PA
1025 MHz VCO (900 MHz BR)	Provides a LO signal to the LNODCT IC, for up-conversion to the transmit frequency
90.3 MHz VCO (900 MHz BR)	Provides a LO signal to LNODCT IC, for the up-conversion and for the down-conversion of the feedback signal. The mixed output becomes the LO signal for Transmit signal up- and down- conversion
Regulator Circuitry	Provides a regulated voltage to various ICs and RF devices located on the Exciter
Linear RF amplifier Stages	Amplifies the RF signal from the Exciter IC to an appropriate level for input to the PA

Memory Circuitry

The memory circuitry is an EEPROM on the Controller portion of the Exciter/ Controller module. The Controller performs memory read and write operations over the parallel bus. The memory device stores the following data...

- kit number
- revision number
- module specific scaling and correction factors
- serial number
- free form information (scratch pad)

A/D Converter Circuitry

Analog signals from various areas throughout the Exciter board enter the A/D converter (A/DC). The A/DC converts these analog signals to digital form. Upon request of the BRC, A/DC output signals enter the BRC via SPI lines. The Controller periodically monitors all signals.

Some of the monitored signals include amplifier bias and synthesizer signals.

Low Noise Offset Direct Conversion Transmit (LNODCT) IC Circuitry

The Low Noise IC is a main interface between the Exciter and BRC. The BRC's Digital Signal Processor (DSP) sends digitized signals (baseband data) to the Exciter over the DSP data bus.

The differential data clock signal serves as a 2.4 MHz reference signal to the Low Noise IC's internal synthesizer. The Low Noise IC compares the reference signal with the outputs of Voltage Controlled Oscillators (VCOs). The Low Noise IC might sense that a VCO's output is out of phase or off-frequency. If so, then the Low Noise IC sends correction pulses to the VCO. The pulses adjust VCO output, thereby matching phase and frequency with the reference.

The Low Noise IC up-converts baseband data from the BRC to the transmit frequency. The Low Noise IC also down-converts the Transmit signal from the Power Amplifier to baseband data for cartesian feedback linearization.

The BRC uses the Serial Peripheral Interface (SPI) bus to communicate with the Low Noise IC. The SPI bus serves as a general purpose, bi-directional, serial link between the BRC and other Base Radio modules, including the Exciter. The SPI carries control and operational data signals to and from Exciter circuits.

Synthesizer Circuitry

The synthesizer circuit consists of the Phase-Locked Loop (PLL) IC and associated circuitry. This circuit's controls the 1025 MHz VCO signal. An internal phase detector generates a logic pulse. This pulse is proportional to the phase or frequency difference between the reference frequency and loop pulse signal.

The charge pump circuit generates a correction signal. The correction signal moves up or down in response to phase detector output pulses. The correction signal passes through the low-pass loop filter. The signal then enters the 1025 MHz Voltage Controlled Oscillator (VCO) circuit.

1025 MHz Voltage Controlled Oscillator (VCO)

For proper operation, the VCO requires a very low-noise, DC supply voltage. An ultra low-pass filter prepares the necessary low-noise voltage and drives the oscillator.

A portion of the oscillator output signal enters the synthesizer circuitry. The circuitry uses this feedback signal to generate correction pulses.

The 1025MHz VCO output mixes with the 90.3 MHz VCO output. The result is a Local Oscillator [LO) signal for the Low Noise IC. The LNODCT uses this LO signal to up-convert the programmed transmit frequency. The Low Noise IC also uses the LO signal to down-convert the PA feedback signal.

90.3 MHz Voltage Controlled Oscillator (VCO)

The synthesizer within the Low Noise IC sets the 90.3 MHz signal. The 90.3 MHz VCO provides a LO signal to the LNODCT IC. The Low Noise IC uses this signal in up-converting and down-converting the feedback signal.

Regulator Circuitry

The voltage regulators generate three regulated voltages: +3 Vdc, +5 Vdc and +11.7 Vdc. The regulators obtain input voltages from the +3.3 Vdc and +14.2 Vdc backplane voltages. The regulated voltages power various ICs and RF devices in the Exciter.

Linear RF Amplifier Stages

The linear RF amplifiers boost the RF signal from the Low Noise IC. The RF Amplifier generates an appropriate signal level to drive the PA.

Figure 4-7 800 and 900 MHz Exciter Board Functional Block Diagram

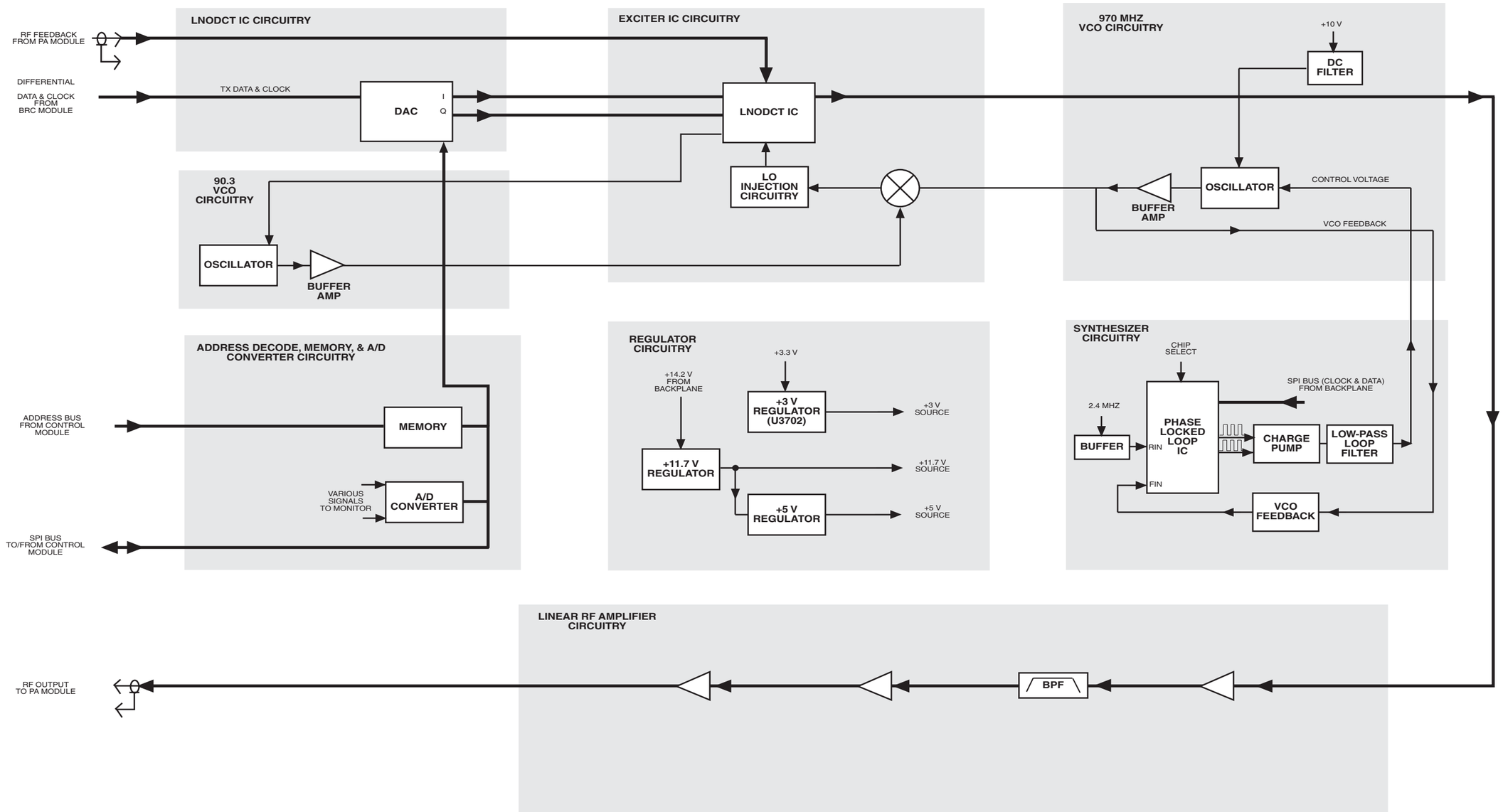

NOTE: Where two frequencies are given, frequency without parentheses applies to 800 MHz BR only and frequency with parentheses applies to 900 MHz BR only.

Overview

Overview

This section provides technical information for the Power Amplifier (PA).

FRU Number to Kit Number Cross Reference

Power Amplifier (PA) Field Replaceable Units (FRUs) are available for the iDEN EBTS. The FRU contains the PA kit and required packaging. Table 5-1 provides a cross reference between PA FRU numbers and kit numbers.

Table 5-1 FRU Number to Kit Number Cross Reference

Description	FRU Number	Kit Number
40 W- 800 MHz Single Channel Base Radio PA	TLF2020	CLF1772
70 W- 800 MHz Single Channel Base Radio PA	TLN3335	CLF1771
52 W- 900 MHz QUAD Channel Base Radio PA	DLN1202	CTF1082
52 W- 800 MHz QUAD Channel Base Radio PA	CLF1499	CLF1400
QUAD+2 Channel Base Radio PA	DLN6655	CLF1835

Power Amplifier Overview

Note The power outputs discussed on this section for the 800 MHz QUAD and 900 MHz QUAD Power Amplifiers are referenced to the single carrier mode, operating at 52 W average power output from the Power Amplifier's output connector.

General

Specifications of the transmitter circuitry, including the Exciter and PAs, are provided in Base Radio Overview section. Figure 5-1 shows the 40W, 800 MHz PA. Figure 5-2 shows the 70W, 800 MHz PA. Figure 5-3 shows the 800 MHz QUAD PA (the 900 MHz QUAD PA is similar in appearance). Figure 5-4 shows the QUAD+2 PA.

40W-800 MHz, 70W-800 MHz, 800 MHz QUAD and 900 MHz QUAD

The Power Amplifier (PA), with the Exciter, provides the transmitter functions for the Base Radio. The PA accepts the low-level modulated RF signal from the Exciter. The PA then amplifies the signal for transmission and distributes the signal through the RF output connector.

The 800 MHz Base Radio can be equipped with either 40 Watt PA, TLF2020 (version CLF1771) or 70 Watt PA, TLN3335 (version CLF1772). The 40W PA module consists of five hybrid modules, four pc boards, and a module heatsink/housing assembly. The 70W PA module consists of eight hybrid modules, four pc boards, and a module heatsink/housing assembly.

The PA connects to the chassis backplane through a 96-pin DIN connector and three blindmate RF connectors. Two Torx screws located on the front of the PA hold it in the chassis.

QUAD+2

The QUAD+2 Power Amplifier is a hot-swap capable, forced convection cooled RF power amplifier. It accepts a low-level modulated RF signal from the transceiver module, and amplifies it for transmission via the site transmit antenna.

Figure 5-3 800/900 MHz QUAD PA

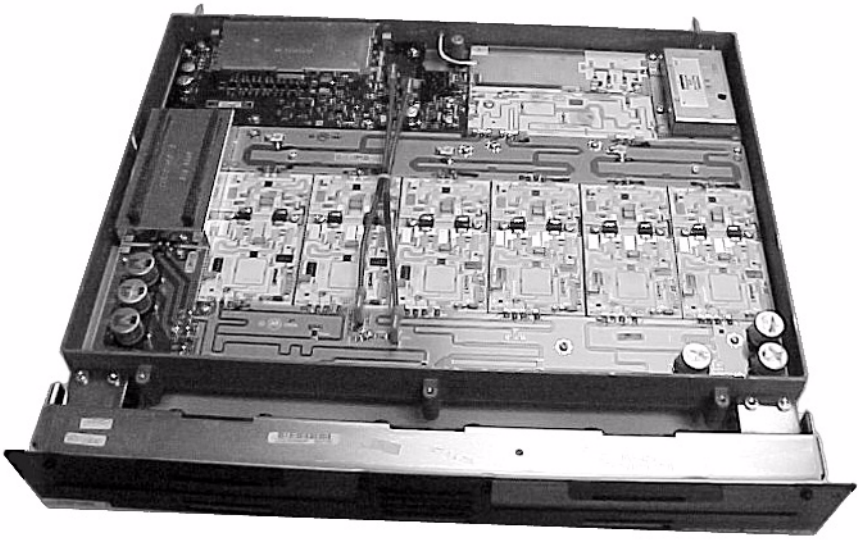

Figure 5-4 QUAD+2 PA

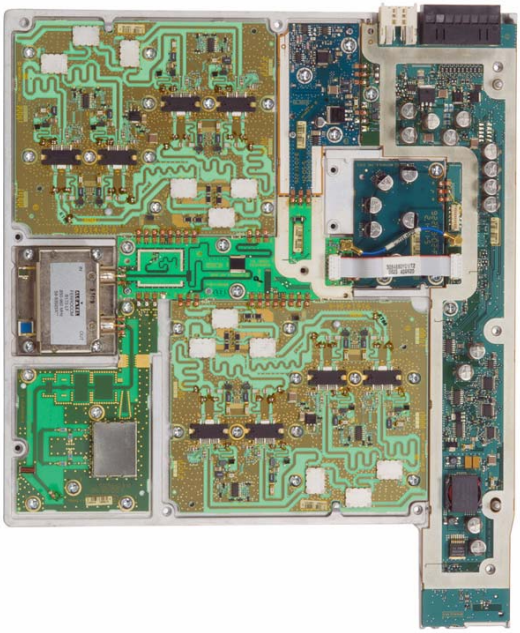

PA Theory of Operation

Table 5-2 describes the basic functions of the PA circuitry. Figures 5-5 and 5-6 show the functional block diagrams of 40W, 800 MHz and 70W, 800 MHz PA, respectively. Figures 5-7 shows a functional block diagram of 800 QUAD MHz. Figures 5-8 shows a functional block diagram of 900 MHz QUAD PA. Figures 5-9 shows a functional block diagram of QUAD+2 PA.

Table 5-2 Power Amplifier Circuitry

Circuit	Description
DC/Metering Board	■ Serves as the main interface between the PA and the backplane board ■ Accepts RF input from the Exciter via a blindmate RF connector ■ Routes the RF input via a 50 Ω stripline to the Linear Driver Module RF amplifier ■ Routes the RF feedback from the RF Combiner/Peripheral Module to the Exciter via a blindmate RF connector ■ Provides digital alarm and metering information of the PA to the BRC via the SPI bus ■ Routes DC power to the fans and PA ■ Contains the thermistor that senses the PA temperature (800 MHz QUAD and 900 MHz QUAD) ■ Contains a Linear Driver Module and Linear Final Module Bias Enable Circuit (900 MHz QUAD) ■ Contains a Voltage Variable Attenuator Circuit (900 MHz QUAD)
Linear Driver Module (LDM)	■ Contains two Class AB stages with the final stage in a parallel configuration (70W-800 MHz, 40W-800 MHz, 800 MHz QUAD) ■ Contains three cascaded Class AB stages with the first two stages configured as distributed amplifiers and the final stage in parallel configuration (900 MHz QUAD) ■ Amplifies the low level RF signal ~11mW average power from the Exciter via the DC/Metering Board (70W-800 MHz, 800 MHz QUAD*, 900 MHz QUAD*) ■ Amplifies the low-level RF signal ~8 mW average power from the Exciter via the DC/Metering Board (40W- 800 MHz) ■ Provides an output of: ~8 W (70W, 800MHz) average power ■ ~4 W (40W, 800 MHz) average power ■ ~6 W (800 MHz QUAD* and 900 MHz QUAD*) average power
Interconnect Board	■ Provides RF interconnection from the LDM to the RF Splitter board ■ Provides DC supply filtering

Table 5-2 Power Amplifier Circuitry (continued)

Circuit	Description
RF Splitter/DC board	■ Interfaces with the DC/Metering Board to route DC power to the LFMs ■ Interfaces with the DC/Metering Board to route PA Bias Enable to the six Linear Final Modules (900 MHz Quad) ■ Contains splitter circuits that split the RF output signal of the LDM to the three Linear Final Modules (40W- 800 MHz) ■ Contains splitter circuits that split the RF output signal of the LDM to the six Linear Final Modules (70W- 800 MHz, 800 MHz QUAD and 900 MHz QUAD)
Linear Final Module (LFM)	■ Each module contains two Class AB amplifiers in parallel. Each module amplifies one of three RF signals (~ 84 W average power) from the LDM (via the Splitter/DC board). Three LFMs provide a sum RF output of approximately 48 W average power, before losses. (40W, 800MHz) ■ Each module contains two Class AB amplifiers in parallel. Each module amplifies one of six RF signals (~ 8 W average power) from the LDM (via the Splitter/DC board). Six LFMs provide a sum RF output of approximately 97 W average power, before losses. (70W, 800MHz) ■ Each module contains two Class AB amplifiers in parallel. Each module amplifies one of six RF signals (~6W average power) from the LDM (via the splitter/DC Board). Six LFMs provide a sum RF output of approximately 73W average power , before losses. (800 MHZ QUAD* and 900 MHz QUAD*)
RF Interconnect Board (40W- 800 MHz PA only)	■ Contains three transmission lines that interconnect the LFMs to the RF Combiner/Peripheral Module
Combiner Board (70W-800 MHz, 800 MHz QUAD, and 900 MHz QUAD only)	■ Contains three separate Quadrature combiner circuits that respectively combine the six RF outputs from the LFMs into three signals. These three signals, in turn, are applied to the RF Combiner/ Peripheral Module.

Table 5-2 Power Amplifier Circuitry (continued)

Circuit	Description
RF Combiner/Peripheral Module	■ Contains a combiner circuit that combines the three RF signals from the RF Interconnect Board (40W- 800 MHz PA) or the Combiner Board (70W-800 MHz PA). It then routes the combined RF signal through a single stage circulator and a Low Pass Filter. The final output signal is routed to the blindmate RF connector (40W-800 MHz and 70W-800 MHz PAs). ■ Contains a combiner circuit that combines the three RF signals from the Combiner Board. It then routes the combined RF signal through a dual stage circulator and a Low Pass Filter. The final output signal is routed to the blindmate RF output connector. (800 MHz QUAD and 900 MHz QUAD PAs) ■ Contains an RF coupler that provides an RF feedback signal to the Exciter via a blindmate RF connector on the DC/Metering Board. Also contains a forward and reverse power detector for alarm and power monitoring purposes. ■ Contains the thermistor that senses PA temperature and feeds the signal back to the DC/Metering Board for processing (40W-800 MHz, 70W-800 MHz)
Fan Assembly	■ Consists of three fans used to keep the PA within predetermined operating temperatures
DC Core Board (QUAD+2 only)	■ Provides Non-volatile memory (NVM) to store unique power amplifier calibration information ■ Provides Gain and FB power control ■ Provides Diagnostic sensors ■ Provides Digital interface to the rest of the base radio ■ Provides Cooling measures control ■ Provides Status LEDs
Driver Board (QUAD+2 only)	■ Amplifies the output RF signal from the transceiver module (via the core board) to an intermediate power level ■ Provides first two stages of RF amplification
Final Board (QUAD+2 only)	■ Amplifies the output RF signal from the driver board (via the distribution board). ■ Provides last two stages of RF amplification
Isolator Board (QUAD+2 only)	■ Provides proper RF loading to the final module
Low Pass Filter Board (QUAD+2 only)	■ Reduces harmonic power levels conducted through the PA RF output connector to acceptable levels

Table 5-2 Power Amplifier Circuitry (continued)

Circuit	Description
Null Board (QUAD+2 only)	■ Provides +28Vdc to the Distribution Board
Distribution Board (QUAD+2 only)	■ Provides all signal routing from the Core and Null Boards to that of the Final and Low Pass Filter boards

Note * The power outputs described in this section for the 800 QUAD and 900 QUAD PAs are references to the single carrier mode operating at 52W average power out from the PA output connector.

DC/Metering Board

Non-QUAD PA

The DC/Metering Board provides the interface between the PA and the Base Radio backplane. The preamplified/modulated RF signal is input directly from the Exciter via the Base Radio backplane.

The RF input signal is applied to the input of the Linear Driver Module (LDM). The RF feedback signal is fed back to the Exciter, where it is monitored for errors.

The primary function of the DC/Metering Boards is to monitor proper operation of the PA. This information is forwarded to the Base Radio Controller (BRC) via the SPI bus. The alarms diagnostic points monitored by the BRC on the PA include the following:

- Forward power
- Reflected power
- PA temperature sense
- Fan Sensor

QUAD PA Only

The DC/Metering Board in the QUAD Radio serves the same function as it does in other radios. However, its circuitry is modified for compatibility with the QUAD Station. As a result, its logic circuitry is operated at 3.3 VDC.

In addition to the functions listed for non-QUAD versions above, the following meter points are ported to the SPI bus:

- A and B Currents
- Thermistor (for PA temperature sensing circuit on the DC/Metering Board)
- Voltage Variable Attenuator Circuit (900 MHz QUAD version)
- PA Bias Enable Circuitry (900 MHz QUAD version)

Linear Driver Module

40W-800 MHz, 70W-800 MHZ and 800 MHZ QUAD PAs

The Linear Driver Module (LDM) amplifies the low-level RF signal from the Exciter. The LDM consists of a two-stage cascaded Class AB amplifier, with the final stage in a parallel configuration.

See Table 5-2 for the approximate input and output levels of the various LDMs. The LDM output is fed to the RF Splitter/DC Distribution Board via an Interconnect Board.

900 QUAD PA

The Linear Driver Module (LDM) amplifies the low-level RF signal from the Exciter. The LDM consists of a three stage, cascaded, Class AB amplifier, with the final stage in a parallel configuration.

See Table 5-2 for the approximate input and output power of the 900 MHz QUAD LDM.

The LDM Output is fed to the RF Splitter/DC Distribution Board via the Interconnect Board.

Interconnect Board

The output of the LDM is applied to the Interconnect Board, which provides an RF connection to the RF Splitter/DC Distribution Board. As a separate function, area on the Interconnect Board serves as a convenient mounting location for electrolytic capacitors used for filtering the +28 VDC supply.

RF Splitter/DC Distribution Board

The RF Splitter portion of this board accepts the amplified signal from the LDM (via the Interconnect Board). The primary function of this circuit is to split the RF signal into drive signals for the LFMs.

In the 40W-800 MHz PA, this circuit splits the drive signal into three separate paths to be applied to the three LFMs, where the signals will be amplified further. In the 70W-800 MHz, 800 MHz QUAD and 900 MHZ QUAD PAs, this circuit splits the drive signal into six separate paths to be applied to the six LFMs, where the signals will be amplified further.

The DC Distribution portion of this board interfaces directly with the DC/ Metering Board to route DC power to the LFMs and provide PA Bias Enable (900 MHz QUAD only)

Linear Final Modules

The RF Splitter output signals are applied directly into the LFMs for final amplification. Each LFM contains a coupler that splits the LFM input signal and feeds the parallel Class AB amplifiers that amplify the RF signals.

In the 40W PA, the amplified signals are then combined on the LFM and sent directly to the RF Interconnect Board. In the 70W PA, the amplified signals are then combined on the LFM and sent directly to the Combiner Board.

See Table 5-2 for the approximate total summed output powers of the various LFMs, before output losses.

RF Interconnect Board

40W- 800 MHz PA Only

The RF Interconnect Board consists of transmission line paths which route the three output signals from the LFMs to the three inputs of the RF Combiner/ Peripheral Module.

Combiner Board

The Combiner Board combines pairs of signals into single signals, thereby combining the six signals from the LDMs into three signals. The resulting three signals are applied to the RF Combiner/Peripheral Module.

RF Combiner/ Peripheral Module

40- 800 MHz, 70W- 800 MHz PAs

This module consists of two portions: an RF combiner and a peripheral module. The RF Combiner portion of the module combines the three RF signals from the RF Interconnect Board (40W- 800 MHz PA) or the Combiner Board (70W- 800 MHz PA) into a single signal using a Wilkinson coupler arrangement.

Following the combiner circuit, the single combined RF signal is then passed through a directional coupler which derives a signal sample of the LFM RF power output. Via the coupler, a sample of the RF output signal is fed to the Exciter, via the DC/Metering Board, as a feedback signal. Following the coupler, the power output signal is passed through a single stage circulator, which protects the PA in the event of high reflected power.

The peripheral portion of the module provides a power monitor circuit that monitors the forward and reflected power of the output signal. This circuit furnishes the A/D converter on the DC/Metering Board with input signals representative of the forward and reflected power levels.

For forward power, a signal representative of the measured value is sent to the BRC via the SPI bus. The BRC determines if this level is within tolerance of the programmed forward power level. If the level is not within parameters, the BRC will issue a warning to the site controller which, in turn, will shut down the Exciter if required.

Reflected power is monitored in the same manner. The BRC uses the reflected power to calculate the voltage standing wave ratio (VSWR). If the VSWR is determined to be excessive, the forward power is rolled back. If it is extremely excessive, the BRC issues a shut-down command to the Exciter.

A thermistor is located on the RF Combiner/Peripheral module to monitor the operating temperature of the PA. The thermistor signal indicating excessive temperature is applied to the A/D converter and then sent to the BRC. The BRC issues a cut-back command to the Exciter module if the monitored temperature is greater than 185° F (85° C).

800 MHz QUAD and 900 MHz QUAD

This module consists of two parts: an RF combiner and a Peripheral module. The RF combiner combines three RF signals from the Combiner Board into a single signal using a Wilkinson coupler arrangement. Following the combiner circuit, the single combined RF signal is then passed through a directional coupler, which derives a signal sample of the LFM RF power output. Via the coupler, a sample of the RF output signal is fed to the Exciter, via the DC/Metering Board, as a feedback signal. Following the coupler, the power output signal is passed through a dual stage circulator, which protects the PA in the event of high reflected power.

The Peripheral module provides a power monitor circuit that monitors the forward and reflected power of the output signal. This circuit furnishes the A/D converter on the DC/Metering Board with input signals, representative of the forward and reflected power levels.

For forward power, a signal representative of the measured value is sent to the BRC via the SPI bus. The BRC determines if this level is within tolerance of the programmed forward power level. If the level is not within tolerance, the BRC will issue a warning to the site controller, which, in turn, will shut down the Exciter, if required.

Reflected power is monitored in the same manner. The BRC uses the reflected power to calculate the voltage standing wave ratio (VSWR). If the VSWR is calculated as excessive, forward power is rolled back. If the VSWR calculation is exceedingly out of tolerance, the BRC issues a shut-down command to the Exciter.

The Thermistor that monitors the operating temperature of the 800 MHZ QUAD and 900 MHz QUAD PAs is located on the DC/Metering Board

Fan Module

The PA contains a fan assembly to maintain normal operating temperature through the use of a cool air intake. The fan assembly consists of three individual fans in which airflow is directed across the PA heatsink.

The current draw of the fans is monitored by the DC/Metering Board. A voltage representative of the current draw is monitored by the BRC. The BRC flags the iSC if an alarm is triggered. The PA LED on the front panel of the BRC also lights, however the PA does not shut down due to a fan failure alone.

DC Core Board (QUAD+2)

The Core Board communicates with the other base radio modules as well as internal PA modules. It utilizes non-volatile memory (NVM) via an EEPROM to store unique PA calibration information.

Driver Board (QUAD+2)

The Driver Amplifier Board provides the first two stages of RF amplification within the PA. It accepts the output RF signal from the transceiver module (via the core board) and amplifies it to an intermediate power level. The Driver Amplifier Board also provides:

- Gain compensation over temperature.
- On-board DC regulation.
- Transmitter standby functionality

Final Board (QUAD+2)

The Final Amplifier Board provides the last two stages of RF amplification, including the second RF gain stage (parallel stage). QUAD+2 utilizes two Final Amplifier Boards.:

- RF power splitting (4–way)
- RF power combining (4–way)
- Diagnostics
- Transmitter standby functionality

Isolator Board (QUAD+2)

The Isolator provides proper RF loading to the final module output regardless of the load presented to the output of the PA itself. The Isolator contains a load resistor to dissipate any reflected power caused by load mismatches at the output of the PA.

Low Pass Filter (LPF) Board (QUAD+2)

The LPF Board reduces harmonic power levels conducted through the PA RF output connector to acceptable levels. The LPF Board has forward and feedback RF power detectors to monitor forward and reflected output power from the PA, in reference to its output connector. It has a single stage isolator that provides > 20dB isolation with < 0.35dB insertion loss. It also provides a low pass filter with < 0.54dB of in-band insertion loss.

Null Board (QUAD+2)

The Null Board provides the +28Vdc supply routing from the Core board to the Distribution board (which routes it to the Final board). It also provides the necessary bulk capacitance that is warranted by the Final board.

Distribution Board (QUAD+2)

The Distribution Board provides for all signal routing from the Core and the Null boards to the Final and LPF boards:

- RF signal from the driver module is split and provided as the input to each of the two final modules.
- RF output from both of the final modules is combined to a single path and provided as the input to the isolator.
- RF power is coupled off the combined port and fed back to the XCVR
- DC Power routing from the NULL board to the Final board
- Forward and reverse DC signaling from the LPF board

Figure 5-8 900 MHz QUAD Power Amplifier Functional Block Diagram

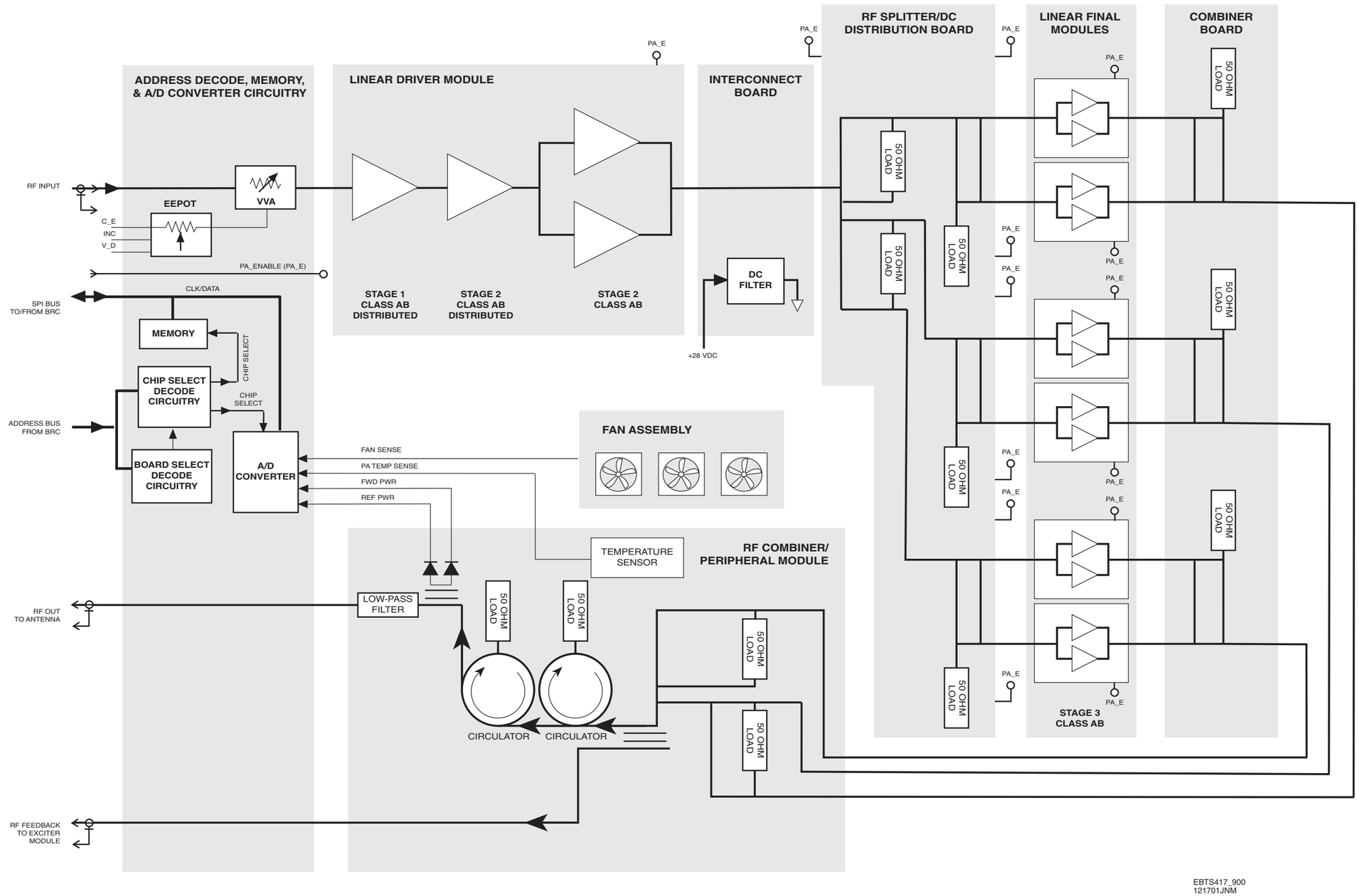

Overview

Overview

This section provides technical information for the DC Power Supply (PS).

FRU Number to Kit Number Cross Reference

DC Power Supply Field Replaceable Units (FRUs) are available for the iDEN EBTS. The FRU contains the Power Supply kit and required packaging. Table 6-1 provides a cross reference between Exciter FRU numbers and kit numbers.

Table 6-1 FRU Number to Kit Number Cross Reference

Description	FRU Number	Kit Number
Single Channel DC Power Supply	TLN3338	CPN1027
QUAD Channel DC Power Supply	CLN1498	CLN1461
QUAD+2 Channel DC Power Supply	DLN6568	CPN1081

DC Power Supply for QUAD Channel Base Radios

QUAD Channel DC Power Supply Overview

The QUAD Channel DC Power Supply provides DC operating voltages to QUAD Channel Base Radio FRUs. The power supply accepts input voltage sources from 41VDC to 60VDC. Input sources may be either positively or negatively grounded.

On initial startup, the supply requires a nominal 43 VDC. If the voltage drops below 41 VDC, the QUAD Channel DC Power Supply enters quiescent mode. In quiescent mode, the power supply emits no power.

The QUAD Channel DC Power Supply is designed for sites with an available DC voltage source. Output voltages from the DC Power Supply are 28.6 VDC, 14.2 VDC and 3.3 VDC, with reference to output ground. The supply is rated for 575 Watts of continuous output, with up to 113° F (45° C) inlet air. At 140° F (60° C), the 28.6 VDC output reduces to 80% of maximum.

The QUAD Channel DC Power Supply consists of the Power Supply and front panel hardware. The QUAD Channel DC Power Supply connects to the chassis backplane through an edgecard connector. Two Torx screws on the front panel secure the QUAD Channel DC power supply to the chassis.

Figure 6-2 shows the QUAD Channel Power Supply with the cover removed.

Figure 6-2 Quad Carrier Power Supply

QUAD Channel DC Power Supply Controls and Indicators

Table 6-5 summarizes LED indications on the QUAD Channel DC Power Supply during normal operation. The ON/OFF switch behind the front panel turns DC power supply on and off.

Table 6-5 DC Power Supply Indicators

LED	Condition	Indications
Green	Solid (on)	Power Supply is on, and operating under normal conditions with no alarms
	Off	Power Supply is turned off or required power is not available
Red	Solid (on)	Power Supply fault or load fault on any output, or input voltage is out of range
	Off	Power Supply is operating normally, with no alarms

QUAD Channel DC Power Supply Performance Specifications

Table 6-6 lists the specifications for the QUAD Channel DC Power Supply.

Table 6-6 DC Power Supply Specifications

Description	Value or Range
Operating Temperature	0° to +40° C (no derating) +41° to +60° C (derating)
Input Voltage	41 to 60 VDC
Input Polarity	Positive (+) ground system
Startup Voltage	43 VDC (minimum)
Input Current	18.0 A (maximum) @ 41 VDC
Steady State Output Voltages	28.6 VDC ±5% 14.2 VDC ±5% 3.3 VDC ±5%
Total Output Power Rating	575 W (no derating) 485 W (derating)

Table 6-6 DC Power Supply Specifications (continued)

Description	Value or Range	
Output Ripple	All outputs 150mV p-p (measured with 20 MHz BW oscilloscope at 25°C) High Frequency individual harmonic voltage limits (10kHz to 100MHz) are:	
	28.6 VDC	1.5 mV p-p
	14.2 VDC	3.0 mV p-p
	3.3 VDC	5.0 mV p-p
Short Circuit Current	0.5 A average (maximum)	

QUAD Channel DC Power Supply Theory of Operation

Table 6-7 briefly describes the basic DC Power Supply circuitry. Figure 6-6 shows the functional block diagrams for the DC Power Supply.

Table 6-7 DC Power Supply Circuitry

Circuit	Description
Input Circuit	Routes input current from the DC power input cable through the high current printed circuit edge connector, EMI filter, panel mounted combination circuit breaker, and on/off switch
Startup Inverter Circuitry	Provides VDC for power supply circuitry during initial power-up
Main Inverter Circuitry	Consists of a switching-type power supply to generate the +28.6 VDC supply voltage
Temperature Protection	The Power Supply contains a built-in cooling fan that runs whenever the supply is powered on. The supply shuts down if the temperature exceeds a preset threshold
+14.2 VDC Secondary Converter Circuitry	Consists of a switching-type power supply to generate the +14.2 VDC supply voltage
+3.3 VDC Secondary Converter Circuitry	Consists of a switching-type power supply to generate the +3.3 VDC supply voltage
Clock Generator Circuitry	Generates the 267 kHz and 133 kHz clock signals used by the pulse width modulators in the four inverter circuits
Address Decode, Memory, & A/D Converter	Serves as the main interface between A/D on the Power Supply and the BRC via the SPI bus

Figure 6-6 QUAD DC Power Supply Functional Block Diagram (Sheet 1 of 2)

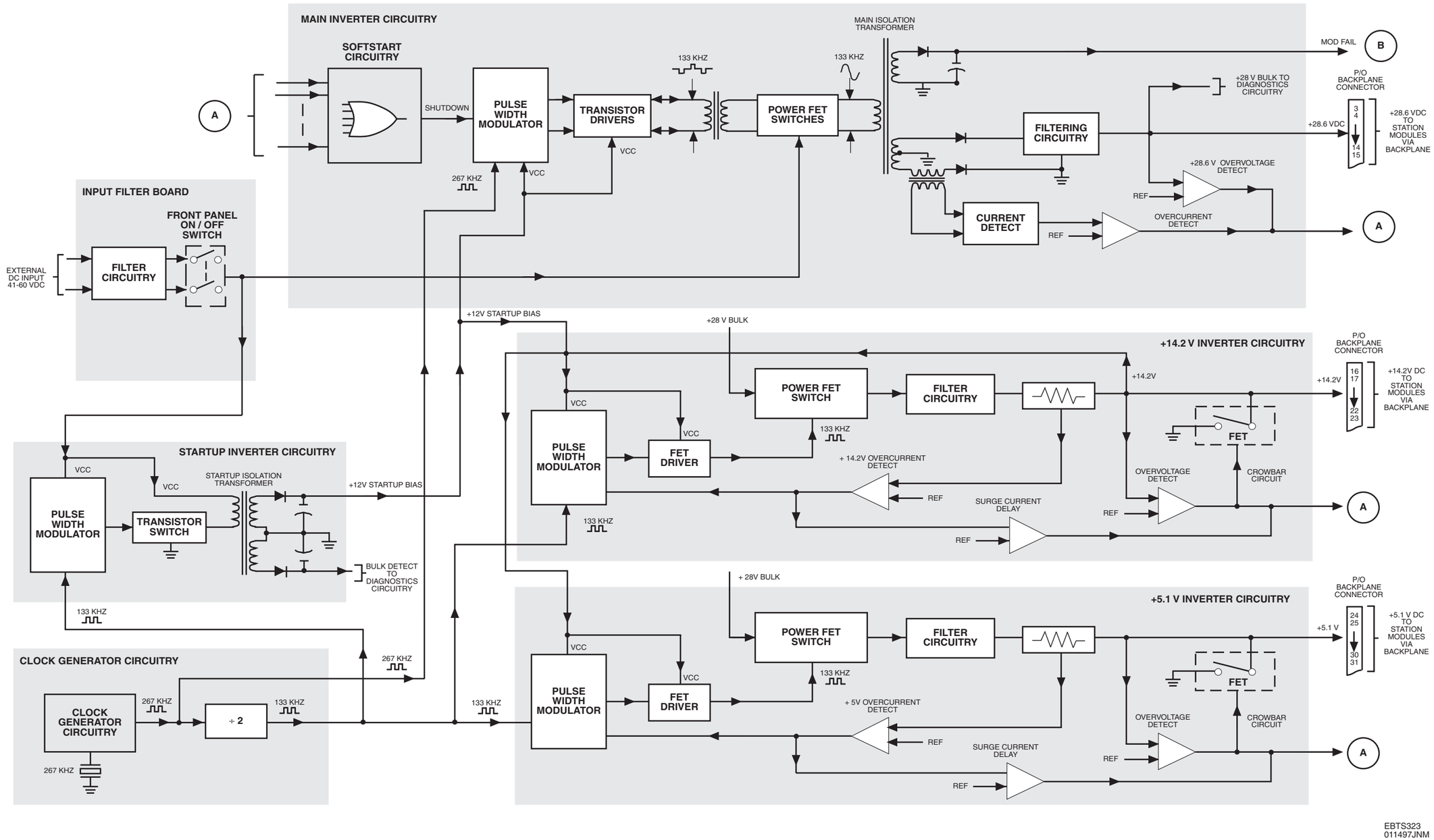

Figure 6-7 QUAD DC Power Supply Functional Block Diagram (Sheet 2 of 2)

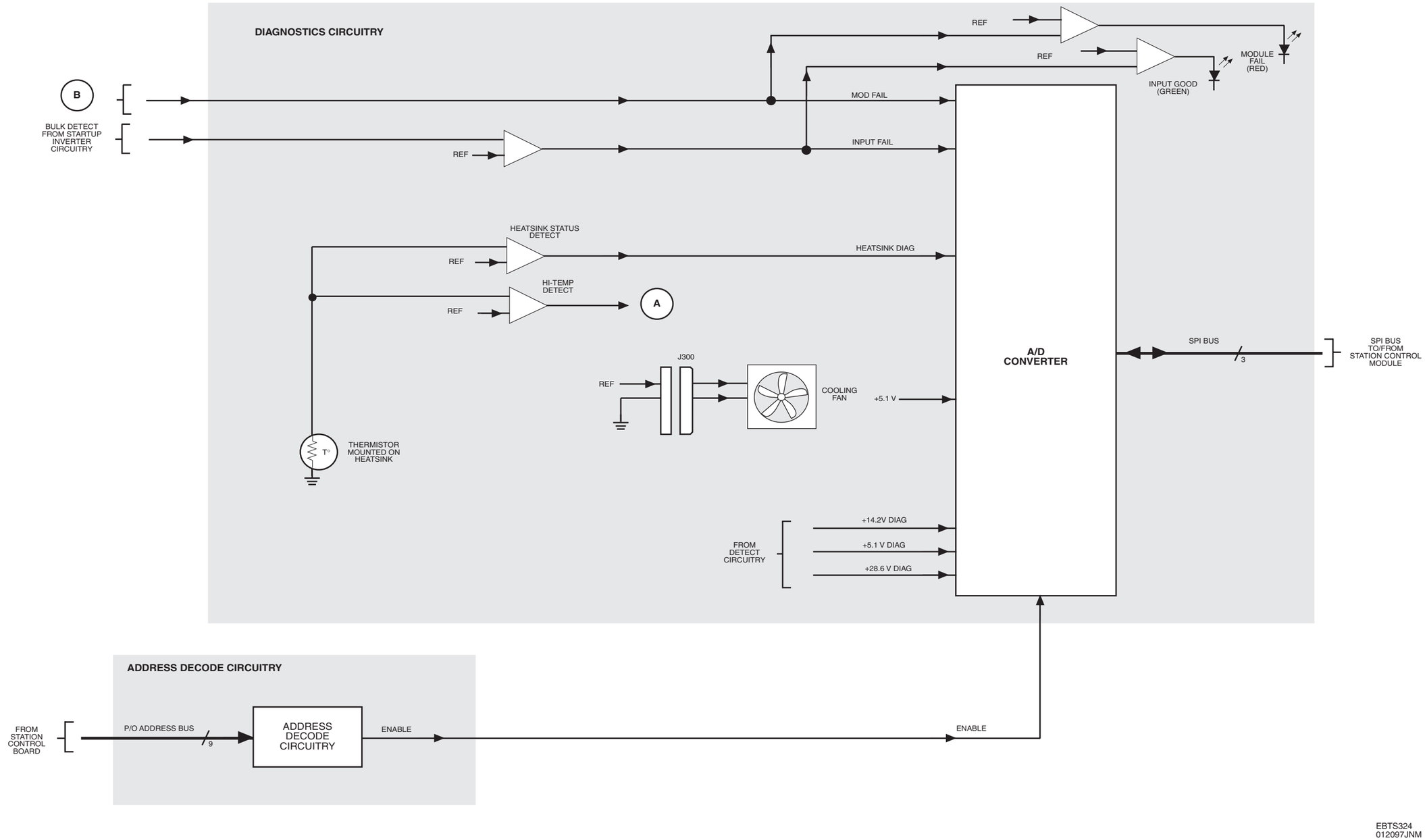

Overview

Overview

This chapter is a guide for isolating Base Radio failures to the FRU level. There are three sections- one each for Legacy Single Channel Base Radios, Generation 2 Single Channel Base Radios, QUAD Channel Base Radios and QUAD+2 Channel Base Radios. Each section contains procedures for:

- Troubleshooting
- Verification/Station Operation

The maintenance philosophy for any Base Radio is to repair by replacing defective FRUs with new FRUs. This method limits down-time.

Two troubleshooting procedures are included. Each procedure is designed to quickly identify faulty FRUs.

Ship defective FRUs to a Motorola repair depot for repair.

Note Any product damage resulting from improperly packaged equipment will not be covered under the standard Motorola warranty agreement.

Troubleshooting Preliminaries

Recommended Test Equipment

Table 8-1 lists recommended test equipment necessary for performing Base Radio troubleshooting/verification procedures.

Table 8-1 Recommended Test Equipment

Equipment	Model/Type	Manufacturer	Description
Service Computer †	80286 or better	IBM, IBM compatible, or Macintosh	Local service computer with a Serial Port
Application Code	n/a	Motorola	Compressed application code for Gen 3 SC and BRC
Communication Software	ProComm Plus HyperTerminal	Symantec Windows 95/98/2000/XP	Host communication
RS-232 Cable	n/a	Locally Procured	Straight through connecting cable with DB9 connector for BRC port
RF Attenuator, 250W, 10dB	01-80301E72 58-45-33	Motorola Aeroflex / Weinschel	Used to attenuate receive signals for testing
RF Power Meter††	HP438A E4418	Hewlett-Packard Agilent	Used to perform relative calibration and linearity checks of signal source
Low-Power Sensor Head	HP8481D E9301	Hewlett-Packard Agilent	Used in conjunction with Power Meter
Rubidium Frequency Standard	RubiSource	Symmetricom	Used as a frequency standard for receive test
iDEN Test Set	R2660	Motorola	Used for checking receive operation

Note † Either a DOS-based computer or Macintosh computer may be used for the service computer. Contact your iDEN System Manager for additional information.

†† Do not substitute analog power meter (such as HP435A). Analog power meter averaging time is not long enough to accurately read pulsed iDEN signal.

Troubleshooting Procedures

Many of the troubleshooting and station operation procedures require Man-Machine Interface (MMI) commands. These commands are used to communicate station level commands to the Base Radio via the RS-232 communications port located on the front of the BRC.

Routine Checkout

Procedure One is a quick, non-intrusive test performed during a routine site visit. Use this procedure to verify proper station operation without taking the station out of service. Figure 8-1 shows the Procedure One Troubleshooting Flowchart.

Figure 8-1 Procedure One Troubleshooting Flowchart

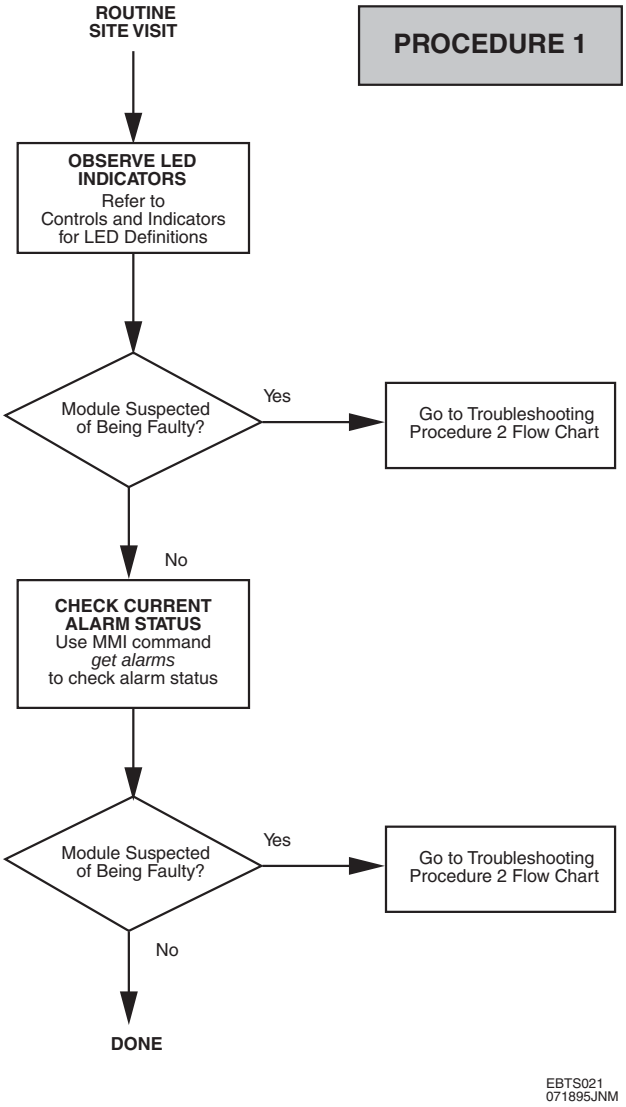

Reported/Suspected Problem

Use Procedure Two to troubleshoot reported or suspected equipment malfunctions. Perform this procedure with equipment in service (non-intrusive) and with equipment taken temporarily out of service (intrusive).

Figure 8-2 shows the Procedure Two Troubleshooting Flowchart.

Figure 8-2 Procedure Two Troubleshooting Flowchart

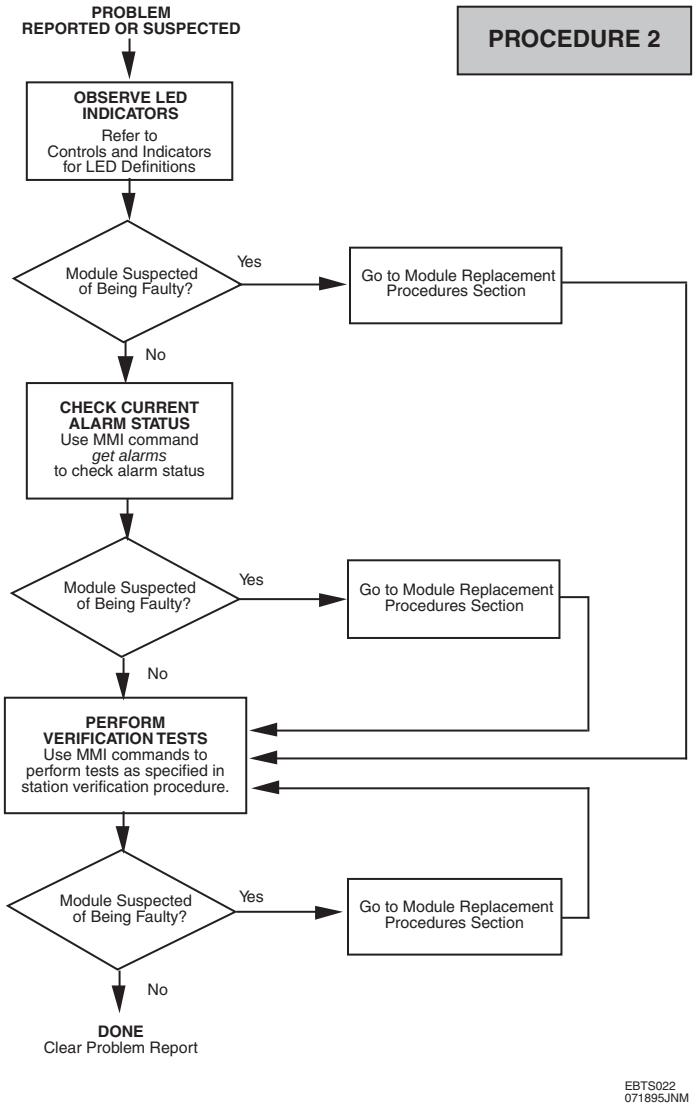

QUAD Channel Base Radio/Base Radio FRU Replacement Procedures

Replace suspected station modules with known non-defective modules to restore the station to proper operation. The following procedures provide FRU replacement instructions, post-replacement adjustments and verification instructions.

QUAD Base Radio Replacement Procedure

Note Base Radio removal and installation procedures appear for reference or buildout purposes. Field maintenance of Base Radios typically consists of replacement of FRUs within the Base Radio. Perform Base Radio FRU replacement according to “Base Radio FRU Replacement Procedure” below.

Perform Base Radio (BR) replacement as described in the following paragraphs.

CAUTION

Improper lifting or dropping the BR could result in serious personal injury or equipment damage.

Base Radios are HEAVY!

Handle the BR with extreme caution, and according to local health and safety regulations.

Removal

Remove the BR from the Equipment Cabinet as follows:

CAUTION

A Single Carrier BR can weigh up to 76 LBS (34 KG). A QUAD Carrier BR can weigh up to 91 LBS (41 KG). Handle the BR with extreme caution, and according to local health and safety regulations.

1. Remove power from the Base Radio by setting the Power Supply ON/OFF switch to the OFF position.
2. Tag and disconnect the cabling from the BR rear panel connectors.

3. Remove the Power Amplifier module to reduce the BR weight. Remove the two M10 Torx screws that secure the Power Amplifier module. Slide the module out of the chassis.
4. Remove the four M30 TORX screws which secure the BR front panel to the Equipment Cabinet mounting rails.
5. While supporting the BR, carefully remove the BR from the Equipment Cabinet by sliding the BR from the front of cabinet. When the BR becomes free from its mounting rails, be sure to fully support it.

Installation

Install BR in Equipment Cabinet as follows:

CAUTION

A Single Carrier BR can weigh up to 76 LBS (34 KG). A QUAD Carrier BR can weigh up to 91 LBS (41 KG). Handle the BR with extreme caution, and according to local health and safety regulations.

1. If adding a BR, install side rails in the appropriate BR mounting position in the rack.
2. Remove the Power Amplifier module to reduce the BR weight. Remove the two M10 Torx screws that secure the Power Amplifier module. Slide the module out of the chassis.
3. While supporting the BR, carefully lift and slide the BR in the Equipment Cabinet mounting position.
4. Secure the BR to the Equipment Cabinet mounting rails using four M30 Torx screws. Tighten the screws to 40 in-lb (4.5 Nm).
5. Slide the Power Amplifier module back into the BR chassis. Replace two M10 Torx screws that secure the Power Amplifier module. Secure the module by tightening the screws to the specified torque of 5 in-lbs.
6. Connect the cabinet cabling to the BR. Refer to Backplane figure XX.
7. Perform BR activation as described below.

Note Base Radio removal and installation procedures appear for reference or buildout purposes. Field maintenance of Base Radios typically consists of replacement of FRUs within the Base Radio. Perform Base Radio FRU replacement according to “Base Radio FRU Replacement Procedure” below.

Anti-Static Precautions

CAUTION

The Base Radio contains static-sensitive devices. Prevent electrostatic discharge damage to Base Radio modules! When replacing Base Radio FRUs, wear a grounded wrist strap. Observe proper anti-static procedures.

Motorola publication 68P81106E84 provides complete static protection information. This publication is available through Motorola National Parts.

Observe the following additional precautions:

- Wear a wrist strap (Motorola Part No. 4280385A59 or equivalent) at all times when servicing the Base Radio to minimize static build-up.
- A grounding clip is provided with each EBTS cabinet. If not available, use another appropriate grounding point.
- DO NOT insert or remove modules with power applied to the Base Radio. ALWAYS turn the power OFF using the Power Supply rocker switch on the front of the Power Supply module.
- Keep spare modules in factory packaging for transporting. When shipping modules, always pack in original packaging.

QUAD BRs Radio FRU Replacement Procedure

Perform the following steps to replace any of the Base Radio FRUs:

Note After a Control Board or BR replacement, the integrated Site Controller (iSC) reboots the BR. Whenever the BR goes off-line, the Replacement BRC Accept Timer begins counting down. A BR reboot occurs if the BR remains off-line as the timer times out. (The timer's default period is three minutes.) If someone turns on the BR before the timer times out, power down the BR. Then wait for the minimum timer period before turning on the BR.

1. Notice the Power Supply rocker switch, behind the front panel of the Power Supply. Set the Power Supply rocker switch to the OFF (0) position. Turning off this switch removes power from the Base Radio.
2. Loosen the front panel fasteners. These are located on each side of the module being replaced.
3. Pull out the module.
4. Insert the non-defective replacement module by aligning the module side rails with the appropriate rail guides inside the Base Radio chassis.
5. Gently push the replacement module completely into the Base Radio chassis assembly using the module handle(s).

CAUTION

DO NOT slam or force the module into the chassis assembly. Rough handling can damage the connectors or backplane.

6. Secure the replacement module by tightening the front panel fasteners to the specified torque of 5 in-lbs.
7. Apply power to the Base Radio by setting the switch to the ON position.
8. Perform the Station Verification Procedure.

QUAD BR Power Amplifier (PA) Fan FRU Replacement

Perform the following steps to replace the Power Amplifier (PA) fans.

1. Remove the Power Amplifier from the Base Radio per FRU Replacement Procedure.
2. Disconnect fan power cable from PA housing.
3. Remove front panel from fan assembly.
4. Remove fan assembly from PA chassis.

Note To install the new fan kit, reverse above procedure.

QUAD Base Radio Station Verification Procedures

Perform the Station Verification Procedures whenever you replace a FRU. The procedures verify transmit and receive operations. Each procedure also contains the equipment setup.

QUAD BR Replacement FRU Verification

Before shipment, the factory programs all module-specific information. Base Radio specific information (e.g., receive and transmit frequencies) involves a download to the Base Radio from the network/site controller.

The Base Radio does not require replacement FRU alignment.

QUAD BR Base Repeater FRU Hardware Revision Verification

Note The following procedure requires the Base Radio to be out of service. Unless the Base Radio is currently out of service, Motorola recommends performing this procedure during off-peak hours. Performing this procedure then minimizes or eliminates disruption of service to system users.

1. Connect one end of the RS-232 cable to the service computer.
2. Connect the other end of the RS-232 cable to the STATUS port, located on the front panel of the EX/CNTL module.
3. After the BR is powered up using the front switch on the Power Supply Module, press the reset button on the Control Module front panel. At the prompt, hit a Carriage Return on the service computer to enter the test application mode. Using the field password, log in to the BR.

   To enter field mode, at the > prompt type **login -ufield.**

   After entering the correct field password, the field> prompt is displayed on the service computer.

   The default factory set field password is **motorola**.

   Note The ‘Out of Box’ default factory set field password is deleted and is replaced by the customer defined field password contained within the OMC. This occurs as soon as the controller module receives its initial OMC download.

   The default OMC set field password is **Motorola**.

Note The OMC field password is customer configurable. Please contact the Operations and Maintenance Center (OMC) operator on duty to obtain your customer unique field password.

```
field>login -ufield
password:<login password>

field>
```

Note Future versions of the QUAD BR will ship with software that recognizes the BR cabinet position. Default Motorola Manufacturing BR programmed cabinet position is (0,0), which automatically sends the radio to Test Application software mode upon power up. Upon setting a valid cabinet position, the radio will default to the Call Processing mode of operation.

4. Collect revision numbers from the station by typing the following command:

```
field>fv -oplatform
field>
```

5. If all modules return revision numbers of the format “Rxx.xx.xx”, then all revision numbers are present. In that case, verification requires no further action. If revision numbers return as blank, or not in the format “Rxx.xx.xx”, contact your local Motorola representative or Technical Support.

6. Set desired cabinet id, position, and of BR by typing the following commands, with the final number on each command being the desired cabinet id and position. The command example below sets cabinet id to 5, and cabinet position to 2.

```
field>ci -oplatform -c5
field>pi -oplatform -p2

field>
```

7. After checking all BRs, log out by keying the following command:

```
field> logout
```

Note To start Call Processing mode of operation, reset the Base Radio using the front panel switch.

QUAD BR Transmitter Verification

The transmitter verification procedure verifies the transmitter operation and the integrity of the transmit path. This verification procedure is recommended after replacing an Exciter, Power Amplifier, BRC, or Power Supply module.

Note The following procedure requires the Base Radio to be out of service. Unless the Base Radio is currently out of service, Motorola recommends performing this procedure during off-peak hours. This minimizes or eliminates disruption of service to system users.

Equipment Setup

To set up the equipment, use the following procedure:

1. Remove power from the Base Radio by setting the Power Supply rocker switch (located behind the front panel of the Power Supply) to the OFF (0) position.
2. Connect one end of the RS-232 cable to the service computer.
3. Connect the other end of the RS-232 cable to the STATUS port located on the front panel of the BRC.

CAUTION

Make sure power to BR is OFF before disconnecting transmitter RF connectors. Disconnecting transmitter RF connectors while the BR is keyed may result in RF burns from arcing.

4. Disconnect the existing cable from the connector labeled PA OUT. This connector is located on the backplane of the Base Radio.
5. Connect a test cable to the PA OUT connector.
6. Connect a 10 dB attenuator (100 W or more average power dissipation) on the other end of the test cable.
7. From the attenuator, connect a cable to the RF IN/OUT connector on the R2660 Communications Analyzer.
8. Remove power from the R2660 and connect the Rubidium Frequency Standard 10MHZ OUTPUT to a 10 dB attenuator.
9. Connect the other end of the 10 dB attenuator to the 10MHZ REFERENCE OSCILLATOR IN/OUT connector on the R2660.

Note Refer to the equipment manual provided with the R2660 for further information regarding mode configuration of the unit (Motorola Part No. 68P80386B72).

10. Set the R2660 to the EXT REF mode.

11. Apply power to the R2660.
12. Set the R2660 to the SPECTRUM ANALYZER mode with the center frequency set to the transmit frequency of the Base Radio under test.
13. Perform the appropriate transmitter verification procedure below for the particular Power Amplifier used in the Base Radio.

Transmitter Verification Procedure (QUAD Carrier 800 MHz and 900 MHz Power Amplifiers)

This procedure provides commands and responses to verify proper operation of the transmit path for 800 MHz and 900 MHz QUAD Channel Base Radios.

1. Power on the BR using the front switch on the Power Supply Module. Press the reset button on the Control Module front panel. At the prompt, hit a Carriage Return on the service computer to enter the test application mode. Using the user_id -ufield and the field password, login to the BR.

   To enter field mode, at the > prompt type **login -ufield.**

   After entering the correct field password, the field> prompt is displayed on the service computer.

   The default factory set field password is **motorola**.

   Note The 'Out of Box' default factory set field password is deleted and is replaced by the customer defined field password contained within the OMC. This occurs as soon as the controller module receives its initial OMC download.

   The default OMC set field password is **Motorola**.

   Note The OMC field password is customer configurable. Please contact the Operations and Maintenance Center (OMC) operator on duty to obtain your customer unique field password.

```
field>login -ufield
password:<login password>

field>
```

2. Dekey the BR to verify that no RF power is being transmitted. Set the transmit DSP test mode to "stop." At the field > prompt, type:

```
field> power -otxch1 -p0
field> ptm -otx_all -mstop
field> dpm -otxch1 -mnone
field> dpm -otxch2 -mnone
field> dpm -otxch3 -mnone
field> dpm -otxch4 -mnone
```

Note The following command keys the transmitter. Make sure that transmission only occurs on licensed frequencies or into an RF load.

3. Key the BR to 40 watts, following the steps below from the field > prompt:

a) **800 MHz QUAD**: Set the frequency of transmit channel 1 through 4.

```
field> freq -otxch1 -f860
field> freq -otxch2 -f860.025
field> freq -otxch3 -f860.05
field> freq -otxch4 -f860.075
```

b) **900 MHz QUAD:** Set the frequency of transmit channel 1 through 4.

```
field> freq -otxch1 -f935
field> freq -otxch2 -f935.025
field> freq -otxch3 -f935.05
field> freq -otxch4 -f935.075
```

c) Enable the channels by setting a data pattern to “iden”

```
field> dpm -otxch1 -miden
field> dpm -otxch2 -miden
field> dpm -otxch3 -miden
field> dpm -otxch4 -miden
```

Note After the following command is entered, power will be transmitted at the output of the Power Amplifier.

d) Set the transmit power to 40 watts and key the BR.

```
field> ptm -otx_all -mdnlk_framed
field> power -otxch1 -p40
```

4. After keying the Base Radio, verify the forward and reflected powers of the station along with the station VSWR with the parameters listed in Table 8-41.

Table 8-41 QUAD BR Transmitter Parameters

Parameter	Value or Range
Forward Power	Greater than 36 Watts
Reflected Power	Less than 4.0 Watts
VSWR	Less than 2:1

Note The reported value for forward power are not indicative of Base Radio performance. This value is reported from the internal wattmeter. These limits are only for verification of operation and are not representative of true operational power of the transmitter.

a) At the field > prompt, type:

```
field> power -otx_all
```

This command returns all active alarms of the Base Radio.

b) At the field > prompt, type:

```
field> alarms -ofault_hndlr
```

If the **alarms** command displays alarms, refer to the System Troubleshooting section of this manual for corrective actions.

5. View the spectrum of the transmitted signal on the R2660 Communications Analyzer in the Spectrum Analyzer mode. Figure 8-10 and Figure 8-11 shows a sample of the 800MHz and 900MHz spectrum, respectively.

Figure 8-10 800 MHz QUAD Carrier Spectrum

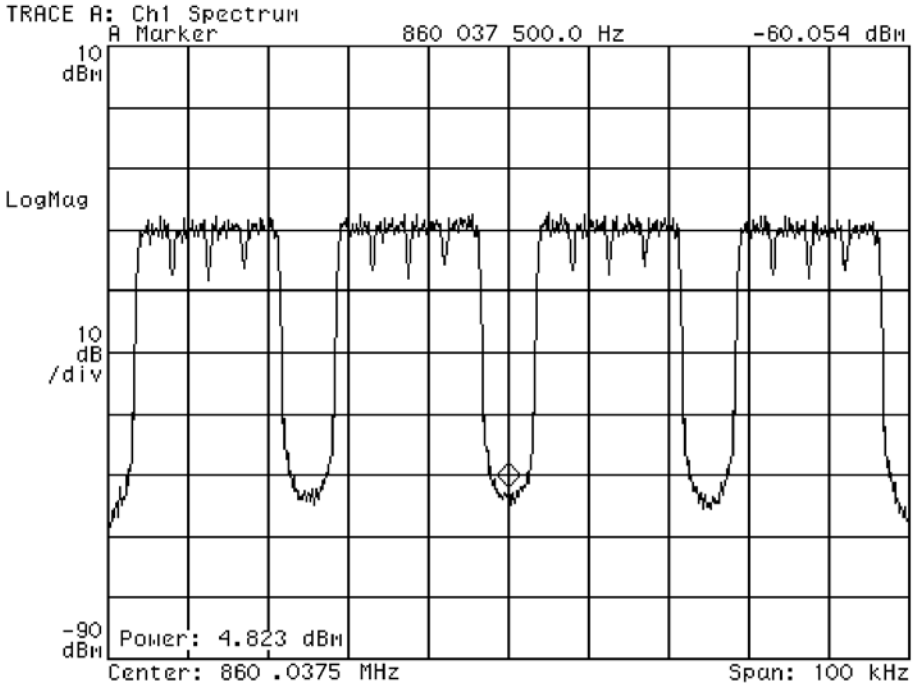

Figure 8-11 900 MHz QUAD Carrier Spectrum

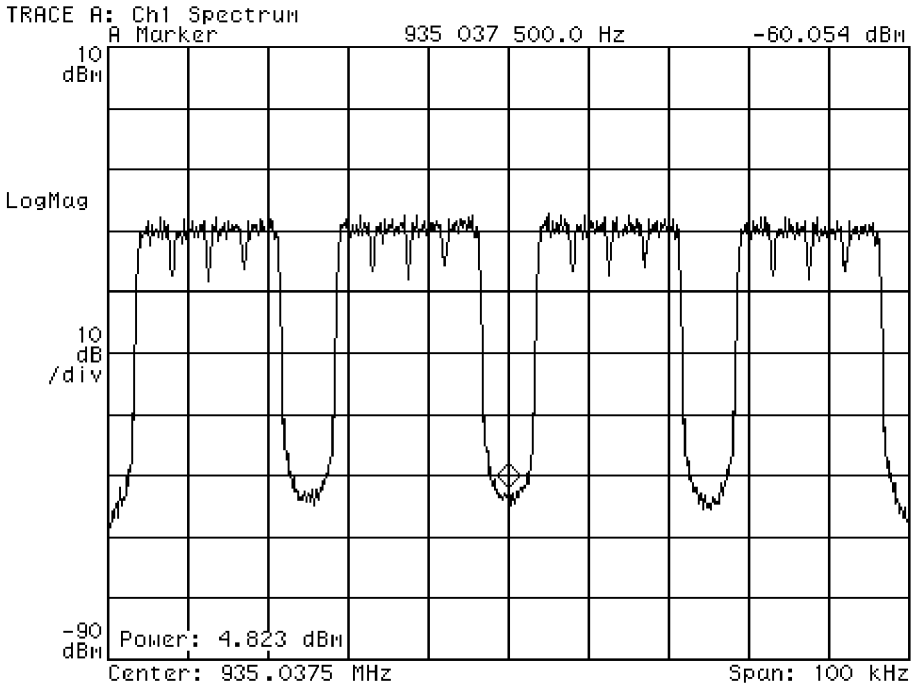

6. Dekey the BR to verify no RF power is being transmitted. Set the transmit DSP test mode to “stop.” At the field> prompt, type:

```
field> power -otxch1 -p0
field> ptm -otx_all -mstop
field> dpm -otxch1 -mnone
field> dpm -otxch2 -mnone
field> dpm -otxch3 -mnone
field> dpm -otxch4 -mnone
```

Equipment Disconnection

Use the following steps to disconnect equipment after verifying the transmitter.

1. Remove power from the Base Radio by setting the Power Supply rocker switch (located behind the front panel of the Power Supply) to the OFF (0) position.
2. Disconnect the RS-232 cable from the connector on the service computer.
3. Disconnect the other end of the RS-232 cable from the RS-232 connector located on the front panel of the BRC.

CAUTION

Make sure power to BR is OFF before disconnecting transmitter RF connectors. Disconnecting transmitter RF connectors while the BR is keyed may result in RF burns from arcing.

4. Disconnect the test cable from the PA OUT connector located on the backplane of the Base Radio.
5. Connect the standard equipment cable to the PA OUT connector.
6. Disconnect the 10 dB attenuator from the other end of the test cable.
7. From the attenuator, disconnect the cable to the R2660 Communications Analyzer.
8. Restore power to the Base Radio by setting the Power Supply rocker switch to the ON (1) position.
9. If necessary, continue with the Receiver Verification Procedure.

QUAD Channel BR Backplane

Backplane Connectors

The Base Radio backplane includes all external equipment connections. Table 8-42 lists and describes the backplane connectors.

Table 8-42 QUAD BR Backplane Connectors

Connector	Module	Description	Connector Type
P1	EXBRC	Signal	168 Pin AMP Z-Pack Futurebus
P2	RX1	Signal	72 Pin AMP Z-Pack Futurebus
P3	RX1	RF	6 coax Harting Harpak
P4	RX2	Signal	72 Pin AMP Z-Pack Futurebus
P5	RX2	RF	6 coax Harting Harpak
P6	RX3	Signal	72 Pin AMP Z-Pack Futurebus
P7	RX3	RF	6 coax Harting Harpak
P8	RX4	Signal	72 Pin AMP Z-Pack Futurebus
P9	RX4	RF	6 coax Harting Harpak
P10	PA	Signal	96 Pin EURO
P11	PS	Signal & Power	78 Pin AMP Teledensity
P12*	PS	-48 Vdc Power In	8 Pin AMP 530521-3
P13	EX	RF(EX from PA)	SMA blindmate
P14	EX	RF(EX to PA)	SMA blindmate
P15	External / EXBRC	Ethernet	BNC blindmate
P16	External / PA	RF (PA from EX)	SMA blindmate
P17	External / PA	RF (PA to EX)	SMA Blindmate
P18	External / PA	TX Output	SMA blindmate
P19	RX Branch 1	RF	SMA

QUAD Channel BR Backplane

Table 8-42 QUAD BR Backplane Connectors

Connector	Module	Description	Connector Type
P20	RX Branch 2	RF	SMA
P21	RX Branch 3	RF	SMA
P22**	External	RS232	Dsub-9
P23	External	Alarm	Dsub-25
P24	External	5MHz/1PPS	BNC

Note * P12 is a cutout in the backplane with threaded inserts for securing the connector which mates directly to the power supply.

Note ** P22 will not be placed on the backplane. However, the backplane shall be designed with P22 to allow for reuse on future products.

Figure 8-14 shows the locations of the QUAD Base Radio external connections.

Figure 8-14 QUAD Base Radio Backplane Connectors

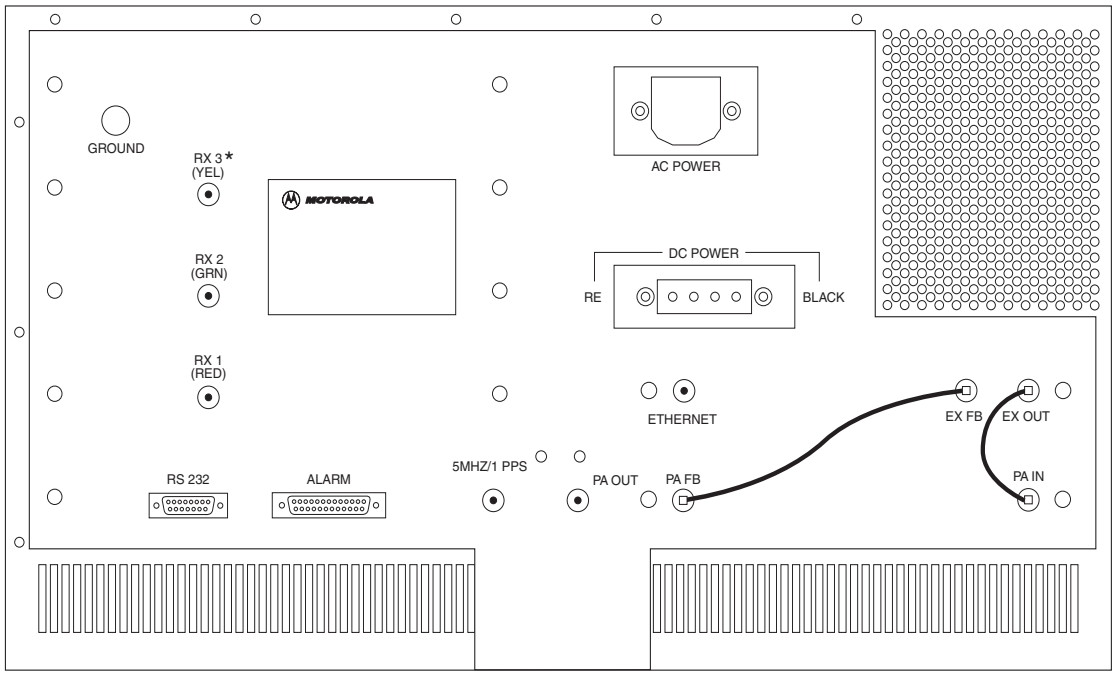

* This port must be terminated by 50Ω load when configured for 2 Branch Diversity. Also, the rx_fru_config parameter must be set to R12.

EBTS327Q
112501JNM

QUAD BR Backplane Connector Pinouts

Table 8-43 lists the pin-outs for the Base Radio Controller board's 168-pin P1 connector.

Table 8-43 EXBRC P1 Pinout, Signal and Power

Row	A	B	C	D
1	GND	3.3 Vdc	3.3 Vdc	NC
2	GND	3.3 Vdc	14.2 Vdc	14.2 Vdc
3	GND	3.3 Vdc	14.2 Vdc	14.2 Vdc
4	GND	GND	GND	GND
5	NC	NC	NC	NC
6	GND	GND	GND	GND
7	GND	16.8MHz_RX	16.8MHz_RX_RTN	GND
8	GND	GND	GND	GND
9	GND	5 MHz/1 PPS	3.3 Vdc	3.3 Vdc
10	NC	NC	NC	3.3 Vdc
11	TxD	CTS	DTR	BRG
12	RTS	RxD	DSR	CD
13	NC	NC	NC	3.3 Vdc
14	NC	NC	SHUTDOWN_	SLEEP_
15	PA_ENABLE	NC	28.6 Vdc	14.2 Vdc
16	NC	NC	NC	3.3 Vdc
17	EXT_GPI_1_	EXT_GPI_2_	EXT_GPO_1_	EXT_GPO_2_
18	BAT_STAT_	MTR_STAT_	EXT_VFWD	EXT_VREV
19	SPI_M3	SPI_M2	SPI_M1	SPI_M0
20	SPI_ENABLE	SPI_MOSI	SPI_MISO	SPI_CLK
21	SPI_A2	SPI_A1	SPI_A0	WP_
22	NC	RxRESET_	NC	NC
23	NC	Clock_SyncB_	NC	NC
24	GND	GND	3.3 Vdc	3.3 Vdc
25	SSI_Data_D	SSI_CLK_D	SSI_FS_D	3.3 Vdc

QUAD Channel BR Backplane

Table 8-43 EXBRC P1 Pinout, Signal and Power (continued)

Row	A	B	C	D
26	SSI_Data_D_RTN	SSI_CLK_D_RTN	NC	3.3 Vdc
27	GND	GND	3.3 Vdc	3.3 Vdc
28	DSPIb_MOSI	DSPIb_CLK	DSPIb_EN_1	DSPIb_EN_2
29	DSPIb_MOSI_RTN	DSPIb_CLK_RTN	DSPIb_EN_3	NC
30	GND	GND	3.3 Vdc	3.3 Vdc
31	GND	SSI_Data_C	SSI_CLK_C	SSI_FS_C
32	GND	SSI_Data_C_RTN	SSI_CLK_C_RTN	NC
33	NC	Clock_SyncA_	NC	NC
34	GND	GND	3.3 Vdc	3.3 Vdc
35	SSI_Data_B	SSI_CLK_B	SSI_FS_B	3.3 Vdc
36	SSI_Data_B_RTN	SSI_CLK_B_RTN	NC	3.3 Vdc
37	GND	GND	3.3 Vdc	3.3 Vdc
38	DSPIa_MOSI	DSPIa_CLK	DSPIa_EN_1	DSPIa_EN_2
39	DSPIa_MOSI_RTN	DSPIa_CLK_RTN	DSPIa_EN_3	NC
40	GND	GND	3.3 Vdc	3.3 Vdc
41	GND	SSI_Data_A	SSI_CLK_A	SSI_FS_A
42	GND	SSI_Data_A_RTN	SSI_CLK_A_RTN	NC

Table 8-44 EXBRC P13 Pinout, Exciter from PA

Coaxial	Description
Center	PA IN
Outer	GND

Table 8-45 EXBRC P14 Pinout, Exciter to PA

Coaxial	Description
Center	PA Feedback
Outer	GND

Table 8-46 EXBRC P15 Pinout, Ethernet

Coaxial	Description
Center	Ethernet
Outer	GND

RX1 Connections

Table 8-47 RX1 P2 Pinout, Signal and Power

Row	A	B	C	D
1	NC	GND	GND	Clock_SyncA_
2	GND	DSPIa_MOSI_RTN	DSPIa_CLK_RTN	DSPIa_EN_1
3	GND	DSPIa_MOSI	DSPIa_CLK	DSPIa_EN_2
4	GND	GND	GND	GND
5	14.2	SSI_CLK_A_RTN	SSI_FS_B	SSI_CLK_B_RTN
6	14.2	SSI_CLK_A	SSI_FS_A	SSI_CLK_B
7	14.2	GND	GND	GND
8	14.2	SSI_Data_A_RTN	GND	SSI_Data_B
9	GND	SSI_Data_A	GND	SSI_Data_B_RTN
10	GND	NC	NC	NC
11	3.3	RxRESET_	GND (ID0)	GND (ID1)
12	3.3	WP_	SPI_A0	SPI_A1
13	3.3	SPI_MISO	SPI_CLK	SPI_A2
14	GND	SPI_M0	SPI_ENABLE	SPI_MOSI
15	GND	SPI_M1	SPI_M2	SPI_M3
16	GND	GND	GND	NC
17	GND	16.8MHz_RX	GND	NC (WB switch)
18	GND	16.8MHz_RX_RTN	GND	NC (MC switch)

Table 8-48 RX1 P3 Pinout, RF Input and Output Connection

Row	A	B	C	D	E
1	GND	-	GND	-	GND
2	-	RX3_EXP3	-	RX1_EXP3	-
3	GND	-	GND	-	GND
4	GND	-	GND	-	GND
5	-	RX2_EXP2	-	RX1_EXP2	-
6	GND	-	GND	-	GND
7	GND	-	GND	-	GND
8	-	RX Branch 1	-	RX1_EXP1	-
9	GND	-	GND	-	GND

RX2 Connections

Table 8-49 RX2 P4 Pinout, Signal and Power

Row	A	B	C	D
1	NC	GND	GND	Clock_SyncA_
2	GND	DSPIa_MOSI_RTN	DSPIa_CLK_RTN	DSPIa_EN_3
3	GND	DSPIa_MOSI	DSPIa_CLK	DSPIa_EN_2
4	GND	GND	GND	GND
5	14.2	SSI_CLK_B_RTN	NC	NC
6	14.2	SSI_CLK_B	SSI_FS_B	NC
7	14.2	GND	GND	GND
8	14.2	SSI_Data_B_RTN	GND	NC
9	GND	SSI_Data_B	GND	NC
10	GND	NC	NC	NC
11	3.3	RxRESET_	NC (ID0)	GND (ID1)
12	3.3	WP_	SPI_A0	SPI_A1
13	3.3	SPI_MISO	SPI_CLK	SPI_A2
14	GND	SPI_M0	SPI_ENABLE	SPI_MOSI

Table 8-49 RX2 P4 Pinout, Signal and Power (continued)

Row	A	B	C	D
15	GND	SPI_M2	SPI_M1	SPI_M3
16	GND	GND	GND	NC
17	GND	16.8MHz_RX	GND	NC (WB switch)
18	GND	16.8MHz_RX_RTN	GND	NC (MC switch)

Table 8-50 RX2 P5 Pinout, RF Input and Output Connection

Row	A	B	C	D	E
1	GND	-	GND	-	GND
2	-	RX3_EXP2	-	RX2_EXP3	-
3	GND	-	GND	-	GND
4	GND	-	GND	-	GND
5	-	RX1_EXP1	-	RX2_EXP2	-
6	GND	-	GND	-	GND
7	GND	-	GND	-	GND
8	-	RX Branch 2	-	RX2_EXP1	-
9	GND	-	GND	-	GND

RX3 Connections

Table 8-51 RX3 P6 Pinout, Signal and Power

Row	A	B	C	D
1	NC	GND	GND	Clock_SyncB_
2	GND	DSPIb_MOSI_RTN	DSPIb_CLK_RTN	DSPIb_EN_1
3	GND	DSPIb_MOSI	DSPIb_CLK	DSPIb_EN_2
4	GND	GND	GND	GND
5	14.2	SSI_CLK_C_RTN	SSI_FS_D	SSI_CLK_D_RTN
6	14.2	SSI_CLK_C	SSI_FS_C	SSI_CLK_D
7	14.2	GND	GND	GND
8	14.2	SSI_Data_C_RTN	GND	SSI_Data_D

Table 8-51 RX3 P6 Pinout, Signal and Power (continued)

Row	A	B	C	D
9	GND	SSI_Data_C	GND	SSI_Data_D_RTN
10	GND	NC	NC	NC
11	3.3	RxRESET_	GND (ID0)	NC (ID1)
12	3.3	WP_	SPI_A0	SPI_A1
13	3.3	SPI_MISO	SPI_CLK	SPI_A2
14	GND	SPI_M2	SPI_ENABLE	SPI_MOSI
15	GND	SPI_M1	SPI_M0	SPI_M3
16	GND	GND	GND	NC
17	GND	16.8MHz_RX	GND	GND (WB switch)
18	GND	16.8MHz_RX_RTN	GND	NC (MC switch)

Table 8-52 RX3 P7 Pinout, RF Input and Output Connection

Row	A	B	C	D	E
1	GND	-	GND	-	GND
2	-	RX1_EXP2	-	RX3_EXP3	-
3	GND	-	GND	-	GND
4	GND	-	GND	-	GND
5	-	RX2_EXP1	-	RX3_EXP2	-
6	GND	-	GND	-	GND
7	GND	-	GND	-	GND
8	-	RX Branch 3	-	RX3_EXP1	-
9	GND	-	GND	-	GND

RX4 Connections

Table 8-53 RX4 P8 Pinout, Signal and Power

Row	A	B	C	D
1	NC	GND	GND	Clock_SyncB_
2	GND	DSPIb_MOSI_RTN	DSPIb_CLK_RTN	DSPIb_EN_3
3	GND	DSPIb_MOSI	DSPIb_CLK	DSPIb_EN_2
4	GND	GND	GND	GND
5	14.2	SSI_CLK_D_RTN	NC	NC
6	14.2	SSI_CLK_D	SSI_FS_D	NC
7	14.2	GND	GND	GND
8	14.2	SSI_Data_D_RTN	GND	NC
9	GND	SSI_Data_D	GND	NC
10	GND	NC	NC	NC
11	3.3	RxRESET_	NC (ID0)	NC (ID1)
12	3.3	WP_	SPI_A0	SPI_A1
13	3.3	SPI_MISO	SPI_CLK	SPI_A2
14	GND	SPI_M0	SPI_ENABLE	SPI_MOSI
15	GND	SPI_M3	SPI_M2	SPI_M1
16	GND	GND	GND	NC
17	GND	16.8MHz_RX	GND	NC (WB switch)
18	GND	16.8MHz_RX_RTN	GND	GND (MC switch)

Table 8-54 RX4 P9 Pinout, RF Input and Output Connection

Row	A	B	C	D	E
1	GND	-	GND	-	GND
2	-	RX1_EXP3	-	NC	-
3	GND	-	GND	-	GND
4	GND	-	GND	-	GND
5	-	RX2_EXP3	-	NC	-

Table 8-54 RX4 P9 Pinout, RF Input and Output Connection

Row	A	B	C	D	E
6	GND	-	GND	-	GND
7	GND	-	GND	-	GND
8	-	RX3_EXP1	-	NC	-
9	GND	-	GND	-	GND

PA Connections

Table 8-55 QUAD BR PA P10 Pinout, Signal and Power

Row	A	B	C
1	SPI_ENABLE	GND	28.6 Vdc
2	GND	GND	28.6 Vdc
3	SPI_A0	GND	28.6 Vdc
4	GND	GND	28.6 Vdc
5	SPI_A1	GND	28.6 Vdc
6	GND	GND	28.6 Vdc
7	SPI_A2	GND	28.6 Vdc
8	GND	GND	28.6 Vdc
9	SPI_M0	GND	28.6 Vdc
10	GND	GND	28.6 Vdc
11	SPI_M1	GND	28.6 Vdc
12	GND	GND	28.6 Vdc
13	SPI_M2	GND	28.6 Vdc
14	GND	GND	28.6 Vdc
15	SPI_M3	GND	28.6 Vdc
16	GND	GND	28.6 Vdc
17	SPI_MISO	GND	28.6 Vdc
18	GND	GND	28.6 Vdc
19	SPI_MOSI	GND	28.6 Vdc
20	GND	GND	28.6 Vdc

Table 8-55 QUAD BR PA P10 Pinout, Signal and Power (continued)

Row	A	B	C
21	SPI_CLK	GND	28.6 Vdc
22	GND	3.3 Vdc	28.6 Vdc
23	WP*	3.3 Vdc	28.6 Vdc
24	GND	GND	28.6 Vdc
25	PA_ENABLE	GND	28.6 Vdc
26	GND	14.2 Vdc	28.6 Vdc
27	GND	14.2 Vdc	28.6 Vdc
28	GND	14.2 Vdc	28.6 Vdc
29	GND	14.2 Vdc	28.6 Vdc
30	GND	28.6 Vdc	28.6 Vdc
31	GND	28.6 Vdc	28.6 Vdc
32	GND	28.6 Vdc	28.6 Vdc

Table 8-56 EXBRC P16 Pinout, PA from Exciter

Coaxial	Description
Center	PA IN
Outer	GND

Table 8-57 EXBRC P17 Pinout, PA to Exciter

Coaxial	Description
Center	PA Feedback
Outer	GND

Table 8-58 EXBRC P18 Pinout, PA RF OUT

Coaxial	Description
Center	PA RF OUT
Outer	GND

External Connections

Table 8-59 QUAD BR Backplane Coaxial and DC

	Signal
P12	-48 Vdc Power
P13	EX Out
P14	Feedback
P15	Ethernet
P16	PA In
P17	PA Feedback
P18	PA RF OUT
P19	RX Branch 1
P20	RX Branch 2
P21	RX Branch 3
P24	5 MHz/1 PPS

Table 8-60 QUAD BR Backplane Alarm 25 Pin Dsub (P23)

	Alarm Signal
1	EXT_GPI_1_
2	EXT_GPO_1_
3	GND
4	EXT_GPI_2_
5	EXT_GPO_2_
6	
7	
8	
9	
10	GND
11	
12	

Table 8-60 QUAD BR Backplane Alarm 25 Pin Dsub (P23)

	Alarm Signal
13	
14	
15	
16	GND
17	BAT_STAT_
18	MTR_STAT_
19	EXT_VFWD
20	EXT_VREV
21	GND
22	GND
23	
24	
25	GND

Table 8-61 QUAD BR Backplane RS-232 9 Pin Dsub (P22)

	RS-232 Signal
1	CD
2	RxD
3	TxD
4	DTR
5	GND
6	DSR
7	RTS
8	CTS
9	BRG*

PS Connections

Table 8-62 QUAD PS Power and Signal (P11)

Pin	Description	Pin	Description	Pin	Description
1	GND (Plug In)	31	3.3 Vdc	61	SPI_MOSI
2	GND	32	GND	62	SPI_CLK
3	GND	33	GND	63	N.C.
4	28.6 Vdc	34	GND	64	N.C.
5	28.6 Vdc	35	GND	65	N.C.
6	28.6 Vdc	36	GND	66	N.C.
7	28.6 Vdc	37	GND	67	SPI_A0
8	28.6 Vdc	38	GND	68	SPI_A1
9	28.6 Vdc	39	GND	69	SPI_M2
10	28.6 Vdc	40	GND	70	SPI_M3
11	28.6 Vdc	41	GND	71	SPI_M1
12	28.6 Vdc	42	GND	72	SLEEP_
13	28.6 Vdc	43	GND	73	SPI_M0
14	28.6 Vdc	44	GND	74	WP_
15	28.6 Vdc	45	GND	75	SPI_A2
16	14.2 Vdc	46	GND	76	GND
17	14.2 Vdc	47	GND	77	GND
18	14.2 Vdc	48	GND	78	GND
19	14.2 Vdc	49	GND		
20	14.2 Vdc	50	GND		
21	14.2 Vdc	51	GND		
2	14.2 Vdc	52	GND		
23	14.2 Vdc	53	GND		
24	3.3 Vdc	54	NC (FAN CONTROL)		
25	3.3 Vdc	55	N.C.		
26	3.3 Vdc	56	N.C.		

Table 8-62 QUAD PS Power and Signal (P11)

Pin	Description	Pin	Description	Pin	Description
27	3.3 Vdc	57	SHUTDOWN_		
28	3.3 Vdc	58	NC (Power sharing)		
29	3.3 Vdc	59	SPI_ENABLE		
30	3.3 Vdc	60	SPI_MISO		

Table 8-63 QUAD BR 48 Vdc Battery Power (P12)

Pin	Description	Description	Pin
1	+ BATTERY	+ BATTERY	5
2	+ BATTERY	+ BATTERY	6
3	- BATTERY (RTN)	- BATTERY (RTN)	7
4	- BATTERY (RTN)	- BATTERY (RTN)	8

QUAD Base Radio Signals

Table 8-64 lists and describes signals for the QUAD Base Radio.

Table 8-64 QUAD Base Radio Signal Descriptions

Signal Name	Description	Special
28.6 Vdc	28.6 Vdc output from PS	
14.2 Vdc	14.2 Vdc output from PS	
3.3 Vdc	3.3 Vdc output from PS	
GND	Station Ground	
RX Branch 1	RX Branch 1 from RFDS	50 ¾
RX Branch 2	RX Branch 2 from RFDS	50 ¾
RX Branch 3	RX Branch 3 from RFDS	50 ¾
RX1_EXP1	RX1 (branch 1) expansion output 1	50 ¾
RX1_EXP2	RX1 (branch 1) expansion output 2	50 ¾
RX1_EXP3	RX1 (branch 1) expansion output 3	50 ¾
RX2_EXP1	RX2 (branch 2) expansion output 1	50 ¾
RX2_EXP2	RX2 (branch 2) expansion output 2	50 ¾
RX2_EXP3	RX2 (branch 2) expansion output 3	50 ¾
RX3_EXP1	RX3 (branch 3) expansion output 1	50 ¾
RX3_EXP2	RX3 (branch 3) expansion output 2	50 ¾
RX3_EXP3	RX3 (branch 3) expansion output 3	50 ¾
5 MHz/1 PPS	5 MHz/1 PPS reference to the BRC	
SPI_ENABLE	Host Centric SPI Enable	
SPI_MISO	Host Centric SPI MISO	
SPI_MOSI	Host Centric SPI MOSI	
SPI_CLK	Host Centric SPI Clock	
SPI_A0	Host SPI Device Address Line A0	
SPI_A1	Host SPI Device Address Line A1	
SPI_A2	Host SPI Device AddressLine A2	
SPI_M0	Host SPI Module Address Line M0	
SPI_M1	Host SPI Module Address Line M1	

Table 8-64 QUAD Base Radio Signal Descriptions (continued)

Signal Name	Description	Special
SPI_M2	Host SPI Module Address Line M2	
SPI_M3	Host SPI Module Address Line M3	
WP_	Write Protect (active low)	
PA_ENABLE	Turns off PA bias with active low	
SLEEP_	Sleep signal from PS	
SHUTDOWN_	PS reset line from BRC	
CD	RS232 Carrier Detect	
RxD	RS232 RX Data	
TxD	RS232 TX Data	
DTR	RS232 Data Terminal Ready	
DSR	RS232 Data Set Ready	
RTS	RS232 Request to Send	
CTS	RS232 Clear to Send	
BRG	Baud Rate Generator	
RxRESET_	Reset Signal to RX modules	
16.8MHz_RX	16.8 MHz reference to RX	differential
16.8MHz_RX_RTN	16.8 MHz reference to RX return	differential
Clock_SyncA_	Clock Sync signal to RX1 & RX2	For Abacus III
Clock_SyncB_	Clock Sync signal to RX3 & RX4	For Abacus III
SSI_Data_A	RX Data from RX module 1	differential
SSI_Data_A_RTN	RX Data from RX module 1return	differential
SSI_Data_B	RX Data from RX module 2	differential
SSI_Data_B_RTN	RX Data from RX module 2 return	differential
SSI_Data_C	RX Data from RX module 3	differential
SSI_Data_C_RTN	RX Data from RX module 3 return	differential
SSI_Data_D	RX Data from RX module 4	differential
SSI_Data_D_RTN	RX Data from RX module 4 return	differential

Table 8-64 QUAD Base Radio Signal Descriptions (continued)

Signal Name	Description	Special
SSI_CLK_A	RX Clock from RX module 1	differential
SSI_CLK_A_RTN	RX Clock from RX module 1 return	differential
SSI_CLK_B	RX Clock from RX module 2	differential
SSI_CLK_B_RTN	RX Clock from RX module 2 return	differential
SSI_CLK_C	RX Clock from RX module 3	differential
SSI_CLK_C_RTN	RX Clock from RX module 3 return	differential
SSI_CLK_D	RX Clock from RX module 4	differential
SSI_CLK_D_RTN	RX Clock from RX module 4 return	differential
SSI_FS_A	RX Frame Sync from RX module 1	
SSI_FS_B	RX Frame Sync from RX module 2	
SSI_FS_C	RX Frame Sync from RX module 3	
SSI_FS_D	RX Frame Sync from RX module 4	
DSPIa_En_1	DSPa SPI RX1 Abacus enable	
DSPIa_En_3	DSPa SPI RX2 Abacus enable	
DSPIa_En_2	DSPa SPI RX1 & RX2 SGC enable	
DSPIb_En_1	DSPb SPI RX3 Abacus enable	
DSPIb_En_3	DSPb SPI RX4 Abacus enable	
DSPIb_En_2	DSPb SPI RX3 & RX4 SGC enable	
DSPIa_MOSI	DSPa SPI MOSI	differential
DSPIa_MOSI_RTN	DSPa SPI MOSI return	differential
DSPIb_MOSI	DSPb SPI MOSI	differential
DSPIb_MOSI_RTN	DSPb SPI MOSI return	differential
DSPIa_CLK	DSPa SPI Clock	differential
DSPIa_CLK_RTN	DSPa SPI CLK return	differential
DSPIb_CLK	DSPb SPI Clock	differential
DSPIb_CLK_RTN	DSPb SPI CLK return	differential
MTR_STAT_	External Wattmeter Status	
BAT_STAT_	Battery Status	
EXT_VFWD	External Wattmeter Forward meter	

Table 8-64 QUAD Base Radio Signal Descriptions (continued)

Signal Name	Description	Special
EXT_VREV	External Wattmeter Reflected meter	
EXT_GPO_1_	General purpose output 1	
EXT_GPO_2_	General purpose output 2	
EXT_GPI_1_	General purpose input 1	
EXT_GPI_2_	General purpose input 2	
NC	Not connected	reserved

Appendix A

Parts and Suppliers

In This Chapter

Topic	See Page
Overview	A-2
Surge Arrestors	A-3
RF Attenuators	A-5
Emergency Generator	A-7
Portable Generator Connection	A-8
Site Alarms	A-9
Cabinet Mounting Hardware	A-11
Cable Connections	A-12
Battery System Connections	A-13
Intercabinet Cabling	A-16
Equipment Cabinet Power Connections	A-18
Other Recommended Suppliers	A-20
Spare Parts Ordering	A-22

Overview

Overview

This appendix contains recommended part numbers (p/n) and manufacturers for various hardware, tools, and equipment used during installation of the EBTS.

Also contained in this appendix is other installation related information, such as determining types of wire lugs, lengths and sizes of various wires and cables, custom cabling information, and fuses.

All suppliers and model numbers listed are included due to their performance record in previous installations. Motorola cannot guarantee the effectiveness of the installation or performance of the system when using these or other suppliers' parts.

Addresses, phone numbers, fax numbers, websites, and other information is presented for each of the recommended suppliers, when possible.

Note In some listings, phone number and address are for corporate or main sales office. Other sales locations may be available. Call number given or go to website for expanded listings.

Information herein is subject to change without notice.

Surge Arrestors

Two types of surge arrestors should be used in the EBTS site, including:

- AC Power and Telco
- Antenna Surge Arrestors

AC Power and Telco Surge Arrestors

The recommended AC Power and Telco surge arrestors are both manufactured by Northern Technologies. The model numbers are:

- AC power - *LAP-B* for 120/240 single-phase
  LAP-C for 208 Vac three-phase
- Telco - *TCS T1DS*

Northern Technologies

23123 E. Mission
Liberty Lake, WA 99019
Phone: 800-727-9119
Fax: 509-927-0435
Internet: http://www.northern-tech.com

Antenna Surge Arrestors

The recommended antenna surge arrestors are manufactured by Polyphaser Inc. The following models are recommended:

- Base Radio antenna (800 MHz tower top amplifier only) - *094-0801T-A*
- Base Radio antenna (800 MHz cavity combined, transmit only; up to 5 channels) - *IS-CT50HN-MA*
- Base Radio antennas (800 MHz duplexed) - *IS-CT50HN-MA*
- Base Radio antennas (900 MHz duplexed) - 097-0311G-A.2
- GPS antennas - *092-082-0T-A*
- Lightning arrestor bracket kit - *Contact your local Motorola Sales representative to order this kit*
- Receive Tower Top amplifier - *094-0801T-A*
- Tower top test port cable - *IS-50NX-C2*

Polyphaser, Inc.

P.O. Box 9000
Minden, NV 89423-9000
Phone: 800-325-7170
775-782-2511
Fax: 775-782-4476
Internet: http://www.polyphaser.com

Motorola has set up several kits that contain the necessary arrestors with proper mounting hardware for the various antenna configurations. Contact your local Motorola representative for these OEM kits.

RF Attenuators

Several RF attenuators are needed at a site to ensure proper receive adjustments. The attenuators are used at the LNA sites to offset the excess gain from the Tower Top amplifiers, to balance the receive path, and to attenuate the BMR signal path. Use the following specifications when choosing vendors:

- Specified frequency range
  - **800 MHz systems** – requires attenuator specification to include 806-821 MHz range
  - **900 MHz systems** – requires attenuator specification to include 896-902 MHz range
- 1 dB increments
- 0.5 dB accuracy or better
- Female N connector / Male N connector

Aeroflex / Weinschel

5305 Spectrum Drive
Frederick, MD 21703-7362745
Phone: 800-638-2048
301-846-9222
Fax: 301-846-9116

Internet: http://www.aeroflex-weinschel.com

Alan Industries, Inc.

745 Green Way Drive
P.O. Box 1203
Columbus, IN 47202
Phone: 800-423-5190
812-372-8869
Fax: 812-372-5909

Internet: http://www.alanindustries.com

Huber + Suhner, Inc.

19 Thompson Drive
Essex, VT 05452
Phone: 802-878-0555
Fax: 802-878-9880
Internet: http://www.hubersuhnerinc.com

JFW Industries, Inc.

5134 Commerce Square Drive
Indianapolis, IN 46237
Phone: 877-887-4JFW
317-887-1340
Fax: 317-881-6790

Internet: http://www.jfwindustries.com

Pasternack Enterprises

P.O. Box 16759
Irvine, CA 92623-6759
Phone: 949-261-1920
Fax: 949-261-7451

Internet: http://www.pasternack.com

RF attenuators are also needed for test equipment. The attenuators must be used between frequency reference equipment, service monitors, and the Motorola EBTS equipment. The following attenuators should be used at the site during optimization:

- Female BNC connector / Male BNC connector, 10 dB attenuator (1 W) between the Rubidium Standard and the R2660 Communications Analyzer. Refer to the System Testing section.
- Female BNC connector / Male BNC connector, 30 dB attenuator (1 W) between the Rubidium Standard and the R2660. Refer to the System Testing, section.

Emergency Generator

Several different sizes of generators are available. Determine the loading requirements of the site prior to ordering a generator. A recommended manufacturer of the emergency backup generator power system is:

Generac Corporation

P.O. Box 8
Waukesha, WI 53187
Phone: 262-544-4811
Fax: 262-544-0770

Portable Generator Connection

The recommended portable generator connection is the *AJA200-34200RS*, manufactured by Appleton Electric. Figure A-1 is a view of a connector located on the building. An adapter may be required if local electrical standards conflict with the wiring configuration.

Figure A-1 Portable Generator Connector

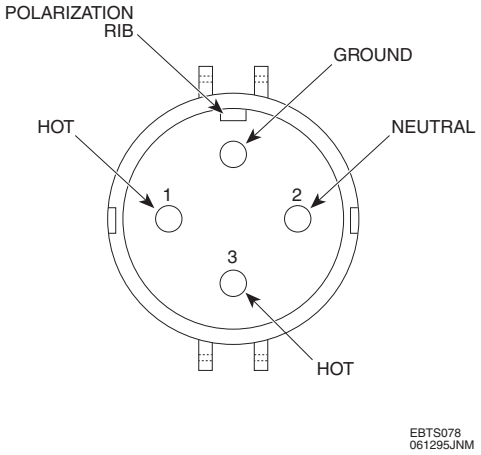

An alternate supplier of the portable generator connection is the *ARKTITE Heavy Duty Receptacle Model 80, Style 2, 200 Amps*, manufactured by Crouse-Hinds.

Cooper Industries
Crouse-Hinds, Inc.

P.O. Box 4999
Syracuse, NY 13221
Phone: 315-477-5531
Fax: 315-477-5719

Internet: http://www.crouse-hinds.com

Site Alarms

- Three types of alarms should be used in an EBTS site, including:
- Intrusion Alarm
- Smoke Alarm
- Temperature Alarm

Intrusion Alarm

The intrusion alarm is the *Sonitrol Door contact 29A*.

Sonitrol

211 N. Union Street, Suite 350
Alexandria, VA 22314
Phone: 800-326-7475
703-684-6606
Fax: 703-684-6612
Internet: http://www.sonitrol.com

Smoke Alarm

An available smoke alarm is the *Sentrol 320CC*. This smoke alarm provides a relay closure for the iMU alarm. These smoke detectors are available from many electrical wholesale distributors. For the location nearest you, call between 6 a.m. and 5 p.m. Pacific Standard Time and ask Sales for the location of the nearest EW (Electric Wholesale) distributor.

Sentrol, Inc.
GE Interlogix

12345 SW Leveton Drive
Tualatin, OR 97062
Phone: 800-547-2556
503-692-4052
Internet: http://www.sentrol.com

Temperature Alarm

The recommended temperature alarm is the *Grainger #2E206* thermostat. This alarm is manufactured by Dayton Electronics and distributed by W.W. Grainger:

W.W. Grainger

Locations Nationwide

Phone: 888-361-8649
Internet: http://www.grainger.com

Cabinet Mounting Hardware

The cabinet mounting hardware is site dependent and must be procured locally.

Equipment Cabinets

The mounting hardware used to secure the Equipment Cabinets containing control and/or RF hardware must be able to provide 1545 pounds of retention force.

- If the cabinets are to be secured to a concrete floor, 1/2” grade 8 bolts with anchors are recommended.
- If the cabinets are to be secured to another type of floor, determine the appropriate mounting hardware.

Power Supply Rack

The Motorola offered Power Supply rack from Power Conversion Products is available in a standard and an earthquake rack.

Power Conversion Products, Inc.

115 Erick Street
Crystal Lake, IL 60039-0380
Phone: 800-435-4872 (customer service)
815-479-0682
Fax: 815-459-0453
Internet: http://www.eltekenergy.com

If the earthquake rack is used, it must be bolted to the floor using the *02100-13 High Performance Anchor Kit*, consisting of:

- anchors (qty. 4)
- load sharing plates (qty. 2)
- large square washers (qty. 8)

Hendry Telephone Products

55 Castilian Drive
Santa Barbara, CA 93117-3080
Phone: 805-968-5511
Fax: 805-968-9561
Internet: http://www.hendry.com

Cable Connections

The recommended manufacturer for all wire lugs used during EBTS installation is Thomas & Betts. All wire lug part numbers listed are for Thomas & Betts.

Thomas & Betts

8155 T&B Boulevard
Memphis, TN 38125
Phone: 800-888-0211 (general information)
800-248-7774 (sales/technical support)
Internet: http://www.tnb.com

Note Double hole wire lugs are preferred, but single hole wire lugs can be used where mounting requirements dictate their use.

Selecting Master Ground Bar Lugs

Table A-1 identifies recommended part numbers for wire lugs used to connect chassis ground wiring to the master ground bar from each cabinet.

Table A-1 Recommended Master Ground Bar Lugs

Wire Size	Wire Type	Lug Color	Description	P/N †
#2 AWG	Stranded	Brown	Single 1/4” diameter hole	54107
#2 AWG	Stranded	Brown	Double 1/4” diameter hole, 5/8” center	54207
#6 AWG	Stranded	Blue	Single 1/4” diameter hole	54105
#6 AWG	Stranded	Blue	Double 1/4” diameter hole, 5/8” center	54205

Note These lugs require the use of the TBM5-S crimping tool.

Note † All part numbers are Thomas & Betts.

Selecting Cabinet Ground Lugs

Table A-2 identifies recommended part numbers for wire lugs used to connect chassis ground wiring to the grounding point of each cabinet.

Table A-2 Recommended Junction Panel Ground Lugs

Wire Size	Wire Type	Lug Color	Description	P/N †
#2 AWG	Stranded	Brown	Single 1/2” diameter hole	54145
#6 AWG	Stranded	Blue	Single 3/8” diameter hole	E6-12

Note These lugs require the use of the TBM5-S crimping tool.

Note † All part numbers are Thomas & Betts.

Battery System Connections

The cable loop length refers to the total length of wire within a given circuit. For example, the combined length of the -48 VDC (hot) lead and the DC return lead equals the cable loop length. This would mean that a cabinet that needs 16 feet of wire between the batteries and Power Supply Rack has a total loop length of 32 feet.

Determining Battery System Wire Size

The wire size for the connection between the batteries and the Power Supply Rack is determined by the required wire length and the maximum allowable voltage drop. The voltage drop in the loop must be kept to below 200 mV. The wire selected should be UL approved and contain a high number of strands for flexibility.

For a standard configuration, the Power Supply rack is located directly adjacent to the batteries with a cable loop length of 20 feet or less, which requires the use of a 4/0 wire. Table A-3 shows recommended wire sizes for various loop lengths. Larger wire sizes may be used if the recommended sizes are not available. The recommended wire sizes are large enough to allow site expansion to a fully loaded site.

Table A-3 Battery System Wire Size

Loop Length	Wire size
20 feet	4/0 (or 250 MCM)
30 feet	350 MCM
45 feet	500 MCM

Selecting Battery System Lugs

Depending on the wire size used and the manufacturer of the Batteries, different wire lugs are crimped onto the power cable ends. After the wire size has been determined from Table A-3, verify the manufacturer of the Batteries (*Dynasty or Absolyte*).

Two different battery systems are offered with the EBTS. The *Dynasty* system is a low to medium capacity, field expandable system supplied for smaller sites or sites with minimal backup hour requirements. This system is custom designed to Motorola specifications. The *Dynasty* system is manufactured by Johnson Controls:

C & D Technologies
Dynasty Division

900 East Keefe Avenue
P.O. Box 591
Milwaukee, WI 53212
Phone: 800-396-2789
414-967-6500
Fax: 414-961-6506
Internet: www.dynastybattery.com

The *Absolute IIP* battery system is a heavy duty, high capacity battery system manufactured by GNB Technologies:

GNB Technologies

829 Parkview Boulevard
Lombard, IL 60148
Phone: 630-629-5200
Fax: 630-629-2635
Internet: www.gnb.com/stationary/stat-absp.html

Refer to Table A-4 to determine the proper wire lug for the connection of that wire to the Power Supply rack.

Table A-4 Power Supply Rack Connection Lugs

Wire Size	Cabinet Lug	Crimp Tool	Lug P/N †
4/0	Double 3/8” hole, 1” center	TBM5-S	54212
250 MCM	Double 3/8” hole, 1” center	TBM8-S	54213
350 MCM	Double 3/8” hole, 1” center	TBM8-S	54215
500 MCM	Double 3/8” hole, 1” center	TBM8-S	54218

Note † All part numbers are Thomas & Betts.

Refer to Table A-5 to determine the proper wire lug for the connection to the batteries, based on the wire size and battery manufacturer. One column lists the selection for *Dynasty* and the other lists the selection for *Absolyte IIP*.

Table A-5 Battery Connection Lugs

Wire Size	Lug Color	Dynasty		Absolyte IIP	
		Description	P/N	Description	P/N
4/0	Purple	Double 3/8” hole, 1” center	54212	Single 1/2” hole	54170
250 MCM	Yellow	Double 3/8” hole, 1” center	54215	Single 1/2” hole	54113
350 MCM	Red	Double 3/8” hole, 1” center	54218	Single 1/2” hole	54115
500 MCM	Brown	Double 3/8” hole, 1” center	54220	Single 5/8” hole	54118

Anti-Oxidant Greases

Any one of the following anti-oxidant greases are recommended for connections to the positive (+) and negative (-) terminals of the batteries:

- No-Ox
- OxGuard
- Penetrox

Intercabinet Cabling

Ethernet and alarm cables connecting to the junction panels of each cabinet are supplied with the system. These cables may not be suitable for every EBTS site. It may be necessary to locally manufacture cables for a custom fit. Information is provided for both supplied cables and custom cables.

Supplied Cables

The cables listed in Table A-6 are supplied with the system. The length of these cables should be sufficient if the considerations outlined in the Pre-Installation section are followed.

Table A-6 Supplied Inter-Cabinet Cabling

Description	Qty.	P/N †
120" long, N-type Male to N-type male cable	3	0112004B24
108" long, BNC Male-to-BNC Male, RG400 cable	2*	3013943N45
210" long, 8-pin Modular plug cable	1*	3084225N42
186" long, PCCH redundancy control cable	1**	3082070X01
Phasing Harness	1	0182004W04

Note † All part numbers are Motorola.

Note * Per RF rack.

Note ** Per Control rack.

Making Custom Cables

If custom Ethernet or 5 MHz cables must be locally manufactured, use the part numbers listed in Table A-7 for ordering the required materials.

Table A-7 Parts for Ethernet and 5 MHz Cables

Description	Qty.	P/N †
Connector, BNC male	As required	2884967D01
Cable, RG400	As required	3084173E01

Table A-8 lists the part numbers for custom alarm cables.

Table A-8 Parts for Alarm Cables

Description	Qty.	P/N †
Connector, 8-pin modular	As required	2882349V01
Cable, 8-wire	As required	Locally procured

Note † All part numbers are Motorola.

Table A-9 lists the part numbers for custom PCCH cables.

Table A-9 Parts for Extending PCCH Redundancy Control Cables

Description	Qty.	P/N †
8-pin male Telco to 8-pin male Telco extension cable, length: as needed	As required	Locally procured

Note Motorola does not guarantee proper operation of system if longer PCCH cable is used.

Note † All part numbers are Motorola.

Note * Per Control rack.

Equipment Cabinet Power Connections

Selecting Power Connection Lugs

Table A-10 identifies recommended part numbers for lugs used for power connections between the Power Supply rack and the Control and RF Cabinets. The maximum wire size accepted by the Control and RF Cabinets is 2/0. The Control and RF Cabinets use screw type compression connectors and do not require lugs.

Table A-10 Recommended Power Connection Lugs for Power Supply Rack

Size	Lug Color	Description	P/N †
2/0	Black	Double 3/8” hole, 1” center	54210
#2 AWG	Brown	Double 1/4” hole, 5/8” center	54207
#4 AWG	Gray	Double 1/4” hole, 5/8” center	54206
#6 AWG	Blue	Double 1/4” hole, 5/8” center	54205

Note † All part numbers are Thomas & Betts.

Determining Power Connection Wire Size

The cable loop length refers to the total length of wire within a given circuit. For example, the combined length of the -48 VDC (hot) lead and the DC return lead equals the cable loop length. This would mean that a cabinet which needs 16 feet of wire between the Power Supply rack and equipment cabinets has a total loop length of 32 feet.

The wire size for the connection between the Power Supply rack and the equipment cabinets is determined by the required wire length and the maximum allowable voltage drop. The voltage drop in the loop must be kept to below 500 mV. The wire selected should be UL approved and contain a high number of strands for flexibility. Table A-11 shows the recommended wire sizes for various loop lengths of the RF Cabinet. Table A-12 shows the recommended wire sizes for loop lengths of the Control Cabinet

For a standard configuration, the equipment cabinets are located adjacent to the Power Supply rack with a cable loop length less than 35’.

Table A-11 Power Connection Wire Size

Loop Length	Wire Size
25 feet or less	#6 AWG
25 to 40 feet	#4 AWG

Table A-11 Power Connection Wire Size (continued)

Loop Length	Wire Size
40 to 60 feet	#2 AWG
60 to 130 feet	1/0 AWG

Note The wire sizes listed are large enough to allow full RF Cabinet Base Radio capacity.

Table A-12 Power Connection Wire Size for Control Cabinet

Loop Length	Wire Size
150 feet or less	#6 AWG

Each equipment cabinet has a total of four Power Supply Rack connections; two -48 VDC (hot) and two DC return. Each equipment cabinet contains two separate power distribution systems. A single hot wire and a single return wire are used for each side of the bus. Two return leads provide redundancy and allow a uniform wire size to be used for all 48 VDC power distribution system connections.

Other Recommended Suppliers

The following are the addresses of various suppliers for tools and equipment used during installation of the EBTS.

Test Equipment

- RubiSource

Symmetricom

2300 Orchard Parkway
San Jose, California 95131
Phone: 408-433-0910
Fax: 408-428-7896
Internet: http://www.symmetricom.com

- Fluke 77 Digital Multimeter

Fluke Corporation

P.O. Box 9090
Everett, WA 98206-9090
Phone: 800-44-FLUKE
425-347-6100
Fax: 425-356-5116
Internet: http://www.fluke.com

Drive Test Equipment

A PC can be used for EBTS optimization and field service. The following are the minimum requirements:

- 19,200 bps serial port
- one floppy drive
- communication software, such as Smartcomm II or Procomm Plus

A drive test application is only available for the PC platform and is currently called iFTA (iDEN Field Test Application). Contact your local Motorola sales representative for more information.

Software

- ProComm Plus software

Symantec Corporation

20330 Stevens Creek Blvd.
Cupertino, CA 95014
Phone: 408-517-8000
Internet: http://www.symantec.com

Spare Parts Ordering

Motorola Inc.

Accessories and Aftermarket Division

Attn: Order Processing

1307 E. Algonquin Road
Schaumburg, IL 60196

Returns:
2222 Glavin Drive
Elgin, IL 60123

Phone:	800-422-4210 (sales/technical support)
Fax:	847-538-8198

Newark Electronics

Call for a local phone number in your area to order parts

Phone:	800-463-9275 (catalog sales)
	773-784-5100
Fax:	847-310-0275
Internet:	http://www.newark.com