Equipment Inspection and Inventory

Motorola recommends that an inventory of all equipment is taken with a Motorola representative to ensure that the order is complete. Carefully inspect all equipment and accessories to verify they arrived in good condition. Promptly report any damaged or missing items to a Motorola representative.

Placement Recommendations

The following are recommendations for placing equipment at a site:

- Secure each rack on a firm, and level floor.
- Use the correct mounting hardware to prevent rack movement.
- Use strain relief when installing and positioning cables and cords to help ensure that no interruption of service occurs.
- Allow at least 1 m (3 ft.) of space at the front and rear of the system to allow for proper air flow, cooling, and safe access to equipment. The system components require an ambient air temperature of 0º C to 50º C (32º to 122º F).
- Locate the site racks and other equipment with enough spacing to allow access for service. Service personnel require access to both the front and rear of the racks.
- Locate the system in an area that is free of dust, smoke, and electrostatic discharge (ESD).
- Ground the racks according to the *Standards and Guidelines for Communication Sites* (68P81089E50).

Spacing Requirements

Proper spacing of equipment is essential for ready access to equipment, ease of maintenance, and safety of personnel. Spacing requirements have been established to meet the National Fire Protection Associations (NFPA) Code, and the American Society of Heating, Refrigerating, and Air Conditioning Engineers (ASHRAE) standards. Also, adhere to any local regulations that apply to spacing requirements.

See the *Standards and Guidelines for Communication Sites* (68P81089E50) for details on these space requirements.

Weight Distribution Within a Rack

To avoid hazards or damage from uneven loading of a rack, distribute the weight of equipment evenly in the rack, and consider the limitations of equipment and cables. When possible, mount the heaviest components in the bottom of the rack.

Rack Requirements

Most communications equipment is installed in a standard 48.26 cm (19-in.) EIA rack or enclosed cabinet. Refer to the manufacturer's instructions when installing racks or cabinets, and installing equipment into the rack or cabinet.

Use all supplied bracing hardware when installing a rack or cabinet and secure all equipment within a rack or cabinet.

If additional equipment needs to be installed, refer to the system design document provided by the Field Engineer or consult the Motorola Field Representative.

Bonding and Grounding

Cabinets and equpment racks include a rack grounding bar (RGB) with the capacity to terminate numerous solid or stranded 6 AWG copper ground wires, which are associated with internal metallic or fiber optic cables and external grounding to power company equipment.

You must ground all doors of a metal cabinet by bonding the door to the main cabinet using a 6 AWG (minimum) copper wire.

The RGB is shipped with dual-hole lugs to terminate 2 AWG ground wires. The minimum number of dual-hole attachments is system dependent and is specified by the customer. This bar provides electrical continuity between all bonds and ground wire with a current carrying capacity equal to or exceeding that of a 6 AWG copper wire.

See the *Standards and Guidelines for Communication Sites* (68P81089E50) for more information on proper bonding and ground at a site.

Power Requirements

The *Standards and Guidelines for Communication Sites* (68P81089E50) defines the guidelines and requirements for cabinets, which house equipment that requires AC power input. Some of the guidelines and requirements are as follows:

- The cabinet is designed to accept 120/240 V, single-phase power with an amperage service as required by the electronic equipment.
- Cabinets serviced by commercial power must be equipped with a nationally recognized test laboratory (NRTL) certified power distribution panel that contains a main circuit breaker or individual circuit breakers of the correct size as required for the electronic equipment or specified by the customer.
- A decal showing an electrical schematic of the power wiring must be affixed to the inside surface of the cabinet.
- All AC power equipment and electrical components must conform to National Electrical Manufacturers Association (NEMA) and National Electrical Code (NEC). These must also be listed by an NRTL.

- A surge protector, designed to protect equipment systems from surges at a 120/240 V service and load center, must be placed on the power feed ahead of all individual load center circuit breakers. This protector must be listed by an NRTL for the purpose intended.
- Selection of a surge protector is based on the susceptibility of the equipment powered by the electrical service, with margin provided for locally generated disturbances. See ANSI/IEEE C62.41 for more details.
- At least one 120 VAC, 15 A duplex convenience outlet equipped with ground fault interrupter (GFI) protection must be provided in the electronic equipment compartment.

Table 2-2 lists the required wire gauges for various installations. The “loop length” refers to the combined length of the -48 VDC (hot) lead and the DC return lead. For example, a cabinet installation that needs 16 feet of wire to reach the power supply rack has a total loop length of 32 feet. For a standard installation, the equipment cabinet is located adjacent to the power supply rack with a cable loop length less than 10.6 m (35 ft.).

Wire used for the cabinet power connection to the breaker panel shall not be less than 6 AWG. Total cable loop (from the power supply rack breakers to the STR 3000 cabinet) voltage drop shall not exceed 500 mV for the cabling of the -48 VDC (hot) lead and the DC return leads.

Some sites may require larger sizes than those noted in Table 2-2 to meet local codes. When larger cable is used to run from a power source, the cable shall be “tapped down” to a smaller size for connection to the STR 3000 breaker panel. In accordance with local code requirements, a properly sized electrical box mounted on top of the STR 3000 rack cabinet or commercial tap cover is the point where the cable size transition should take place. The site planner will specify the details of the transition.

When a “tapped down” connection is used, the total voltage drop between the “tapped down” section and the main loop should not exceed 500 mV.

The screws that connect the power cables to the power supply rack are not provided and must be locally procured. Power supply rack breaker panel screw size is 3/8-16 x 3/4.

Table 2-2 Power Connection Wire Gauge

Loop Length	Wire Gauge	Maximum Outer Diameter of Cable
15.3 m (50 ft.) or less	6 AWG	10.2 mm (0.40 in.)
15.3 to 24.4 m (50 to 80 ft.)	4 AWG	10.2 mm (0.40 in.)
24.4 to 36.6 m (80 to 120 ft.)	2 AWG	10.2 mm (0.40 in.)

Antenna Requirements

All antenna feed line installations are to be made through a metal antenna entry plate that is external to the site building. See the *Standards and Guidelines for Communication Sites* (68P81089E50) for details on the requirements for antenna feed lines.

RF Antenna at the Co-Located Site

The RF antenna provides a link between the prime and remote sites without introducing overload, desensitivity, and intermodulation at a co-located site. You may need to install a fixed attenuator to the antenna feed line at the site. The values for these attenuators can vary from site to site.

Transmit Antenna on the STR 3000 Simulcast Base Radio Rack

One transmit cavity combiner can support up to 12 base radios per transmit antenna. It is possible to combine the base radios into as few as two cabinets, if they are adjacent. To increase system reliability and eliminate a single point of failure, use a minimum of two transmit antennas per site.

GPS Requirements

A simulcast subsystem uses two Global Positioning System (GPS) antennas to provide a certain degree of redundancy in case one antenna is damaged or inadvertently shadowing. Mount the two antennas at least 3.05 m (10 ft.) apart with an unrestricted aerial view down to within 10˚ of the horizon in all directions. The antennas must also be mounted high enough to clear the peak of the site roof.

Defining the Correct View for the Location

The hemispheric location of the site also affects installation of the GPS antennas. For systems in the northern hemisphere, mount the antennas to maintain a clear view of the southern sky. For systems in the southern hemisphere, mount the antennas to maintain a clear view of the northern sky.

Avoiding Obstructions

Be careful to avoid adjacent structures (such as trees and buildings), which can obstruct the GPS antennas with their wide and solid profiles. Mount the antennas to clear these types of obstructions. However, an adjacent antenna tower that protrudes into the required view at a prime or remote site does not obstruct the view and only has a minimal effect on reception from the GPS satellite.

Isolate the GPS antennas from any RF interference by mounting the antennas at least 12˚ horizontally from other transmitting antennas.

GPS Antenna Line Loss

The maximum allowable line attenuation between the antenna and the TRAK 9100 GPS receiver is 10 dB. This 10 dB figure includes a 4 dB margin for attenuation from foliage. So, in an installation in which there is interference from foliage, allow for 6 dB line loss and 4 dB foliage attenuation. Installations in which the antenna has an unobstructed view of the sky may have a maximum line attenuation of 10 dB.

In a typical installation using 0.5-in. low density foam coaxial cable, the length of the cable run should never exceed 45.72 m (150 ft.). This is sufficient for most installations.

When considering the use of larger cables, calculate the cable lengths allowing 4.5 dB of loss at 1.5 GHz. The remaining 1.5 dB of attenuation is provided by interior site cabling and connectors.

For more information on installation of the GPS antenna, see "Installing the Global Positioning Satellite Antenna" on page 3-26.

Environmental Requirements

One of the major considerations in designing a site is how to maintain an environment in which the equipment can operate efficiently. A properly designed heating, ventilation, and air conditioning (HVAC) system provides the proper environmental conditions for the communications equipment.

Each manufacturer specifies an operating or ambient temperature for their equipment. These two terms for temperature are defined:

- **Operating temperature** refers to the temperature within the equipment case with the equipment operating at a given capacity or load.
- **Ambient temperature** refers to the environmental temperature as typically measured 152 cm (5 ft.) above the floor in the center of an adjacent aisle.

For the specific environmental requirements for the equipment in a simulcast subsystem, see:

- Chapter 3,"Installing the Prime Site (10Base-2)."
- Chapter 4,"Installing the Prime Site (10Base-T)."
- Chapter 5,"Installing the Digital Simulcast Remote Site (10Base-2)."
- Chapter 6,"Installing the Digital Simulcast Remote Site (10Base-T)."

Expansion Considerations

Expansion cabinets or racks allow equipment to be added to a site. Each type of equipment has its own specific cabinet or rack for installing additional devices. For example, install an expansion rack to add STR 3000 Simulcast Base Radios to a site in the digital simulcast subsystem.

Each expansion cabinet or rack has its own requirements for installation. Detailed information for expansions appear in "Installing the Expansion Cabinets" on page 5-10 and "Installing the Expansion Cabinets" on page 6-11.

Electrostatic Discharge

Electronic components, such as circuit boards and memory modules, can be extremely sensitive to electrostatic discharge (ESD). Motorola recommends that an antistatic wrist strap and a conductive foam pad be used when installing or upgrading the system.

If an ESD station is not available, wear an antistatic wrist strap. Wrap the strap around the wrist and attach the ground end (usually a piece of copper foil or an alligator clip) to an electrical ground. An electrical ground can be a piece of metal that literally runs into the ground (such as an unpainted metal pipe) or the metal part of a grounded electrical appliance. An appliance is grounded if it has a three-prong plug and is plugged into a three-prong grounded outlet.

NOTE

Do not use a computer as a ground, because it is not plugged in during installation.

FCC Requirements

Radio frequency (RF) transmitters installed at sites within the United States must be in compliance with the following FCC regulations:

- Only persons holding a general class commercial radio telephone operator's license or non-licensed persons working under the immediate supervision of licensed operators can make adjustments to radio transmitters.
- The power input to the final RF stage shall not exceed the maximum power specified on the current station authorization.
- The frequency of the transmitter must be checked during initial installation of the transmitter, when replacing modules, or when making adjustments that affect the carrier frequency or modulation characteristics.

This equipment has been tested and found to comply with the limits for a Class A digital device, pursuant to part 15 of the FCC Rules. These limits are designed to provide reasonable protection against harmful interference when the equipment is operated in a commercial environment.

This equipment generates, uses, and can radiate radio frequency energy. If not installed properly and used in accordance with the instruction manuals, the equipment may cause harmful interference to radio communications. Operation of this equipment in a residential area is likely to cause harmful interference, in which case the user is required to correct the interference.

Electromagnetic Safety Requirements

This section describes information you need to know about working near electromagnetic energy.

OSHA Related Safety Requirements

The United States Department of Labor, through the provisions of the Occupational Safety and Health Act (OSHA) of 1970, has established an electromagnetic energy safety standard that applies to the use of this equipment. Proper use of this equipment will result in exposure below the OSHA limit.

Human Exposure Compliance for RF Energy

STR 3000 Simulcast Base Radios are designed to generate and radiate RF energy by means of an external antenna. When terminated into a non-radiating RF load, the base radio equipment is certified to comply with Federal Communications Commission (FCC) regulations pertaining to human exposure of RF radiation in accordance with the FCC Rules Part 1 section 1.1310 as published in title 47 code of federal regulations and procedures established in *TIA/EIA TSB92, Report on EME Evaluation for RF Cabinet Emissions Under FCC MPE Guidelines*.

Compliance to FCC regulations of the final installation should be assessed and take into account site specific characteristics, such as type and location of antennas, as well as site accessibility of occupational personnel (controlled environment) and general public (uncontrolled environment). This equipment should only be installed and maintained by trained technicians. Licensees of the FCC using this equipment are responsible for ensuring that its installation and operation comply with FCC regulations Part 1 section 1.1310 as published in title 47 code of federal regulations.

Whether a given installation meets FCC limits for human exposure to radio frequency radiation may depend not only on this equipment, but also on whether the “environments” being assessed are being affected by radio frequency fields from other equipment, the effects of which may add to the level of exposure. Accordingly, the overall exposure may be affected by radio frequency generating facilities that exist at the time the licensee’s equipment is being installed or even by equipment installed later. Therefore, the effect of any such facilities must be considered in site selection and in determining whether a particular installation meets the FCC requirements.

FCC OET Bulletin 65 provides materials to assist in making determinations if a given facility is compliant with the human exposure to RF radiation limits. Determining the compliance of transmitter sites of various complexities may be accomplished by means of computational methods.

In general, observe the following guidelines when working in or around radio transmitter sites:

- Ensure that all personnel have electromagnetic energy awareness training.
- Ensure that all personnel entering the site are authorized.
- Obey all posted signs.
- Assume all antennas are active.
- Before working on antennas, notify owners and disable appropriate transmitters.
- Maintain minimum of 1 m (3 ft.) clearance from all antennas.
- Do not stop in front of antennas.
- Use personal RF monitors while working near antennas.
- Never operate transmitters without shields during normal operation.
- Do not operate base station antennas in equipment rooms.

Installing the STR 3000 Base Radio Rack

The STR 3000 Base Radio rack contains the RF channels and related components for a simulcast remote site.

CAUTION

The cables shipped with your system were sized for a specific racking configuration. Swapping equipment within racks or from one rack to another can put excessive strain on cables and cause cable failures. Do not install additional equipment or devices into the rack as this may have a negative effect on the thermal performance of the equipment and result in reduced safety or reliability.

Overview of the STR 3000 Base Radio Rack

The STR 3000 Base Radio is the RF portion of the 800 MHz, digital-only, simulcast remote site infrastructure. The STR 3000 rack includes from one to six base radios, multicouplers, combiner, isolator, junction panel, circuit breaker panel, and cabling in a single rack. This rack provides the transmit and receive capabilities for the remote site.

The STR 3000 rack forwards digital voice and control packets from the comparator to the transmitter and forwards digital voice and control packets from the receiver to the comparator.

Figure 5-2 shows the STR 3000 Base Radio rack with four base radios.

Figure 5-2 STR 3000 Base Radio Rack with Four Base Radios

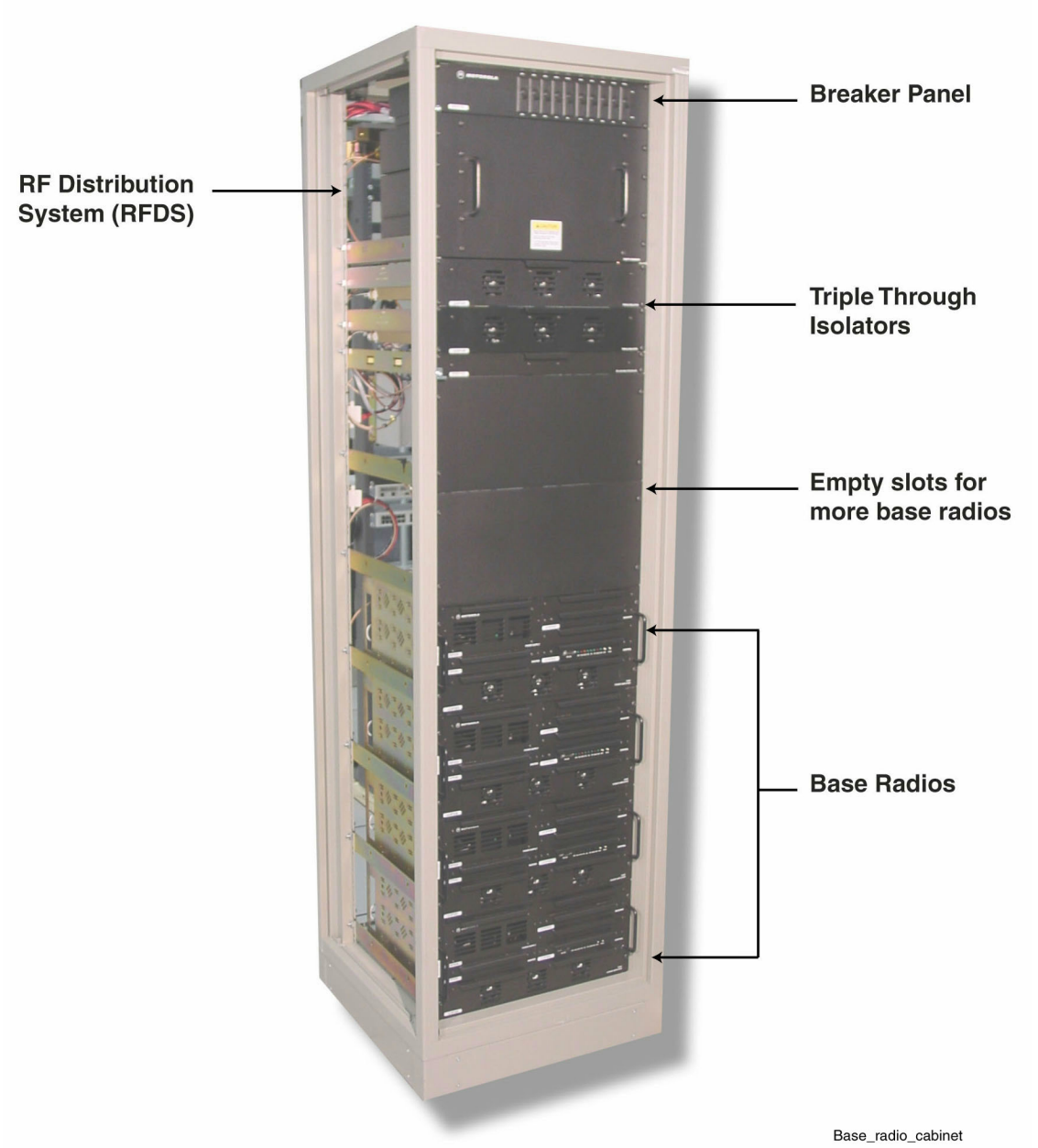

STR 3000 Rack Modules

Table 5-1 lists the hardware modules that comprise the STR 3000 rack.

Table 5-1 STR 3000 Rack Modules

Module	Description
Breaker panel	Provides on/off control and electrical overload protection to each module within the cabinet.
Cavity combiner	Acts as a band-pass filter, combines two to six transmit signals and places them on a single antenna port. The minimum channel spacing of the cavity combiner is 150 kHz.
Triple isolator	Allows RF to pass from the power amplifier to the combiner and antenna while redirecting any reflected energy from the antenna system away from the power amp and into a 50 ohm load.
Receive multicoupler (RMC)	Supplies a port that takes the signal from the RX antenna and distributes the appropriate information to each base radio in its rack.
Base radio	Handles the transmit and receive functions for the rack through separate modules.

NOTE

The cavity combiner, triple-through isolator, and receive multicoupler comprise the Radio Frequency Distribution System (RFDS).

Base Radio Modules

The base radio consists of different modules that handle the transmit and receive functions for the rack. Table 5-2 lists these modules.

Table 5-2 Base Radio Modules

Module	Description
-48 VDC power supply	Converts the -48 VDC input to the voltages required by the other base radio modules.
Exciter	Provides the transmitter and modulation functions for the base radio in conjunction with the power amplifier.
Power amplifier (PA)	Provides the transmitter functions for the base radio in conjunction with the exciter. The PA accepts the low-level modulated RF signal from the exciter and amplifies the signal for transmission via the RF output connector.
Base radio controller	Provides signal processing and operational control for other base radio modules.
Receiver	Provides the back end receive function.

Figure 5-3 shows the layout for the base radio modules.

Figure 5-3 Layout of the Base Radio Modules

Baseradio_w_co

Installing the STR 3000 Base Radio Rack

The STR 3000 Base Radio Rack is shipped in a cabinet. To install this STR 3000 cabinet, prepare the site and bolt the rack to the floor in the location indicated on the site design drawings.

Placement of the Rack

WARNING

Always use two or more persons and appropriate lifting equipment whenever moving an STR 3000 rack. A fully configured rack weighs approximately 360 kg (800 lbs). Death, serious personal injury, or equipment damage can result if the rack tips over.

General suggestions for placing the rack are as follows:

- Secure the rack on a firm and level floor. Use the correct mounting hardware to eliminate component movement.
- Use strain relief when installing and positioning cables and cords to ensure that no interruption of service occurs.
- Locate the STR 3000 cabinet where it can be serviced easily. Service people require access to the front and the rear of the system.
- Locate the STR 3000 cabinet in an area that is free of dust, smoke, and debris.
- Maintain proper grounding and electrostatic discharge (ESD) precautions.

- Maintain proper climate and heating, ventilation, and air conditioning (HVAC) controls.

WARNING

The base radio and combiner unit weight exceeds 32 kg (70 lbs) and requires two people to lift when removing the unit from the rack. To avoid injury, fully support a unit when it is free from the mounting rails.

Installing the Rack

Perform Procedure 5-1 to install the STR 3000 rack.

Procedure 5-1 How to Install the STR 3000 Rack

1	Place the rack carefully in the designated area where it will be installed at the remote site. See the site plan for the correct location.
2	Bolt the rack to the floor using the correct hardware for the type of installation. See the *Standards and Guidelines for Communication Sites* (68P81089E50) for details on a rack installation.
3	Verify proper grounding of the rack.
4	Check to ensure all of the boards are properly seated in the site controller chassis. Boards may have loosened during shipping.
5	Connect power connections to the STR 3000 rack. See "Connecting Power to the STR 3000 Rack" on page 5-9 for more information.

Connecting the STR 3000 Rack to Ground

Connect each cabinet frame to the site master ground bar using a single dedicated 2 AWG ground wire.

The site ground wire should drop into the top of each cabinet and be connected to the designated grounding stud located at the junction panel at the top rear of the cabinet. Single hole lugs (1.27 cm (0.5-in.) diameter) are used for these grounding connections.

WARNING

Never use a bare or damaged wire for the connection of chassis ground or other electrical wiring to prevent damage to equipment or potential injury to personnel.

CAUTION

Do NOT daisy-chain multiple equipment cabinet grounds using a single ground wire. Doing so increases the overall inductance of the ground wire which can distribute surge energy among the cabinets instead of to the master ground bar.

See *Standards and Guidelines for Communications Sites* (68P81089E50) for detailed information on grounding the rack.

Connecting Power to the STR 3000 Rack

The STR 3000 rack requires a -48 VDC, which is provided by the DC power distribution. Figure 5-4 shows the typical connections for power to the STR 3000 rack.

Figure 5-4 Typical Power Connections for the STR 3000 Rack

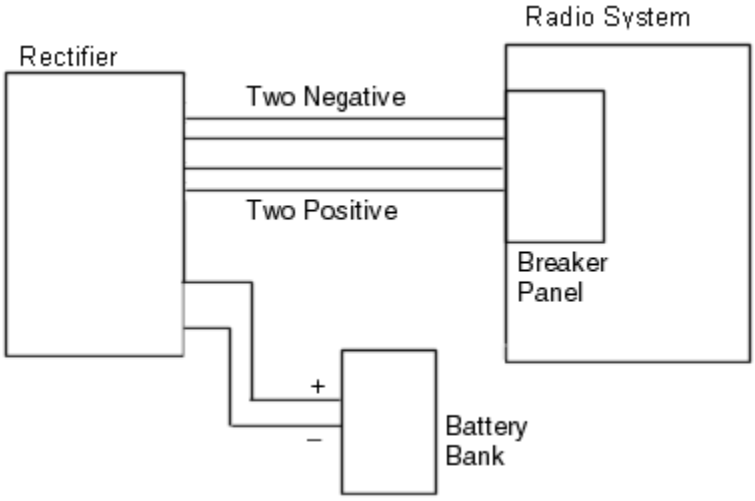

Determining Power Connection Wire Size

Wire size recommendations contained herein reflect Motorola engineering requirements for proper system operation. Local regulations should be adhered to and will supersede any other specifications in this manual, where applicable.

CAUTION

Do not use wire smaller than 16 mm2 CSA (5 AWG). Cable loop voltage drop must not exceed 500 mV for cabling of the -48 VDC and DC return leads.

For a standard installation, the equipment cabinet is located adjacent to the power supply equipment with a cable loop length less than 10.67 m (35 ft.).

The “loop length” refers to the combined length of the -48 VDC lead and the DC return lead. For example, a cabinet which needs 4.87 m (16 ft.) of wire between the power supply equipment and equipment cabinets has a total loop length of 9.75 m (32 ft.).

Table 5-3 lists the required wire sizes for various installations.

Table 5-3 Power Connections Wire Size

Loop Length	Wire Size
15.2 m (50 ft.) or less	16 mm2 CSA (5 AWG)
15.2 - 24.8 m (50 - 80 ft.)	25 mm2 CSA (4 AWG)
24.8 - 36.6 m (80 - 120 ft.)	35 mm2 CSA (2 AWG)

Installing the Expansion Cabinets

If an expansion cabinet is required, the expansion cabinet must be located to the right of the prime cabinet (See Figure 5-5). The two cavity combiners are connected to their respective side of the phasing harness. The phasing harness bracket for the transmit combiner is mounted to the expansion rack. The power monitor unit (PMU) is connected to the post filter, which is connected to the top of the phasing harness.

Figure 5-5 Placement of Expansion Cabinets

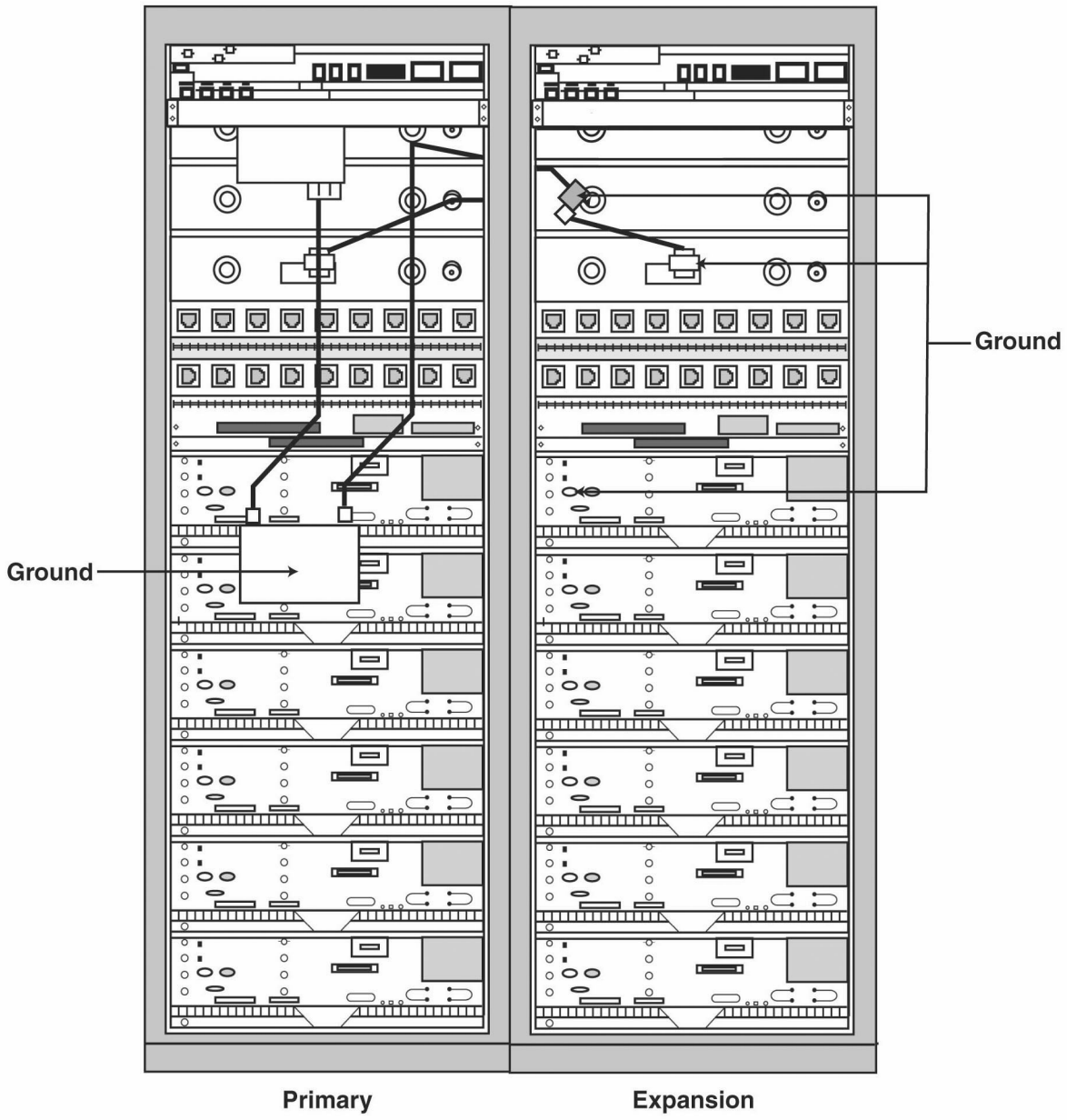

Expcabinets

Cabling the STR 3000 Base Radio Rack

The components of the STR 3000 Base Radio rack are shipped as one unit and do not require separate cabling during the initial installation. For more information on how to cable each component within the rack, see Volume 8, Field Replaceable Units and Entities (68P81004Y55).

From the rack, make the following connections to the system:

- "Connecting the Ethernet Cables" on page 5-12
- "Connecting the Transmit Cables" on page 5-13
- "Connecting the Receive Cables" on page 5-14
- "Connecting the V.24 Cabling" on page 5-16
- "Connecting Cables for a Co-Located Remote Site" on page 5-17

Connecting the Ethernet Cables

Table 5-4 lists the Ethernet connections from the STR 3000 rack to the system.

Table 5-4 Ethernet Connections from the STR 3000 Rack

From STR 3000 Rack		Destination Device		Description
Port	**Connector Type**	**Port**	**Connector Type**	
Ethernet Out port on the junction panel in the first cabinet	BNC	Port 1 on Hub	RJ45	Ethernet LAN connection
Ethernet Out port on the junction panel in succeeding cabinets	BNC	Ethernet out on preceding panel	RJ45	Ethernet LAN connection
Ethernet Out port on the junction panel in the last cabinet	BNC with 50 ohm termination	Terminator on Ethernet Out	BNC	LAN termination

NOTE

Both ends of the Ethernet cabling for a rack must be terminated.

NOTE

The DLN1269A base radio controller module can be configured for both 10Base-2 and 10Base-T operation. The site must be all 10Base-2 or all 10Base-T. You cannot mix configurations within a site.

Connecting the Transmit Cables

Table 5-5 lists the transmit connections from the STR 3000 rack to the system.

NOTE

For more detail on internal cabling, see Volume 8, *Field Replaceable Units and Entities* (68P81004Y55).

Table 5-5 Connections for the Transmit Cables

From STR 3000 Rack		Destination Device		Description
Port	Connector Type	Port	Connector Type	
Transmit antenna	7/16 DIN N Type	Antenna	7/16 DIN N Type	Transmit output from the STR 3000 to the transmit antenna.

Figure 5-6 shows the transmit cabling layout for a six-channel STR 3000 Base Radio rack.

Figure 5-6 Transmit Cabling in the STR 3000 Rack

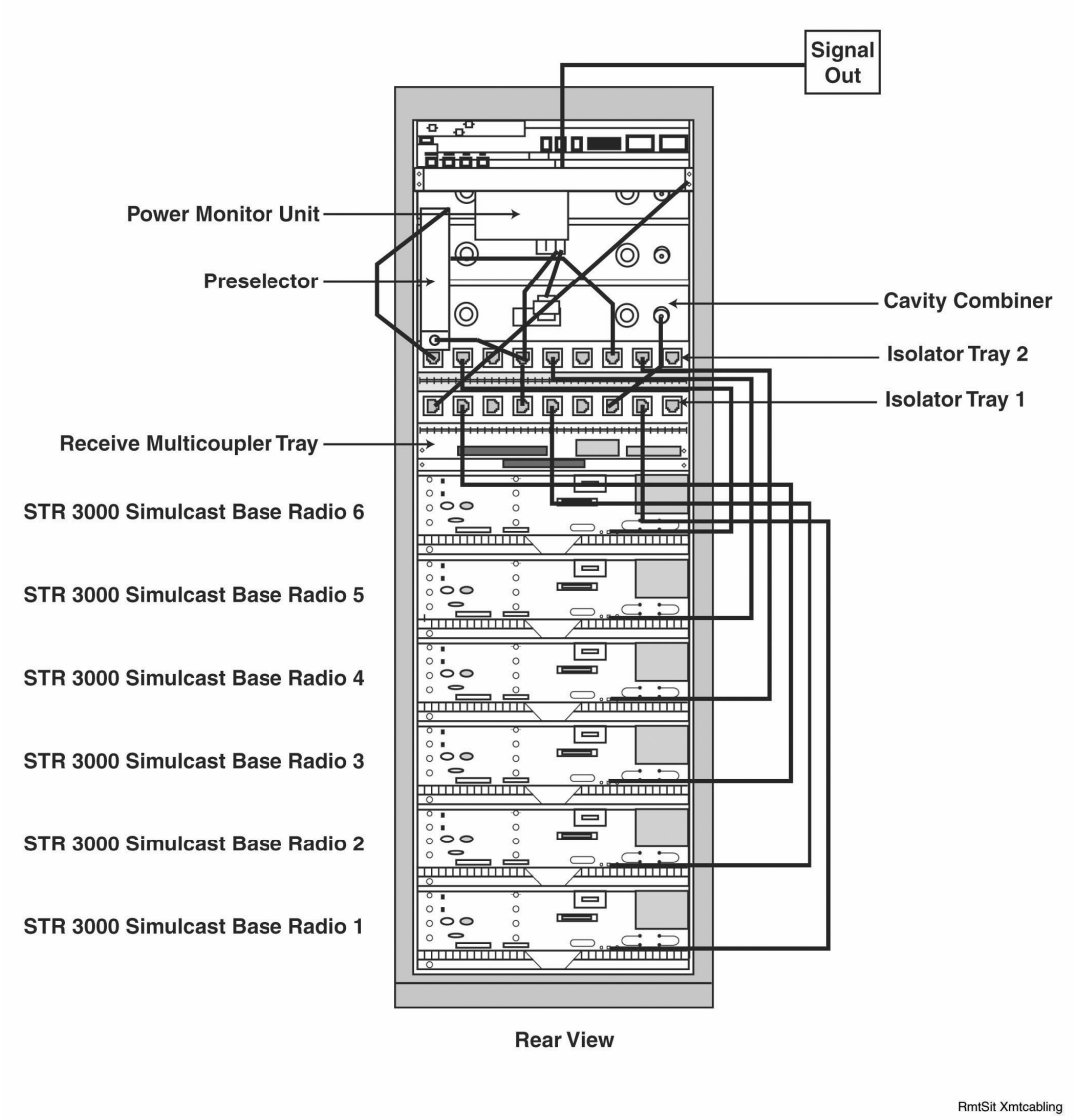

Connecting the Receive Cables

Table 5-6 lists the receive connections from the system into the STR 3000 rack.

Table 5-6 Connections for the Receive Cables

From STR 3000 Rack		Destination Device		Description
Port	Connector Type	Port	Connector Type	
Rx In (Signal IN on figure)	7/16 DIN N Type	Receive antenna	7/16 DIN N Type	Receives antenna input into the STR 3000 rack

Figure 5-7 shows the receive cable connections for the STR 3000 rack.

Figure 5-7 Receive Cabling in the STR 3000 Rack

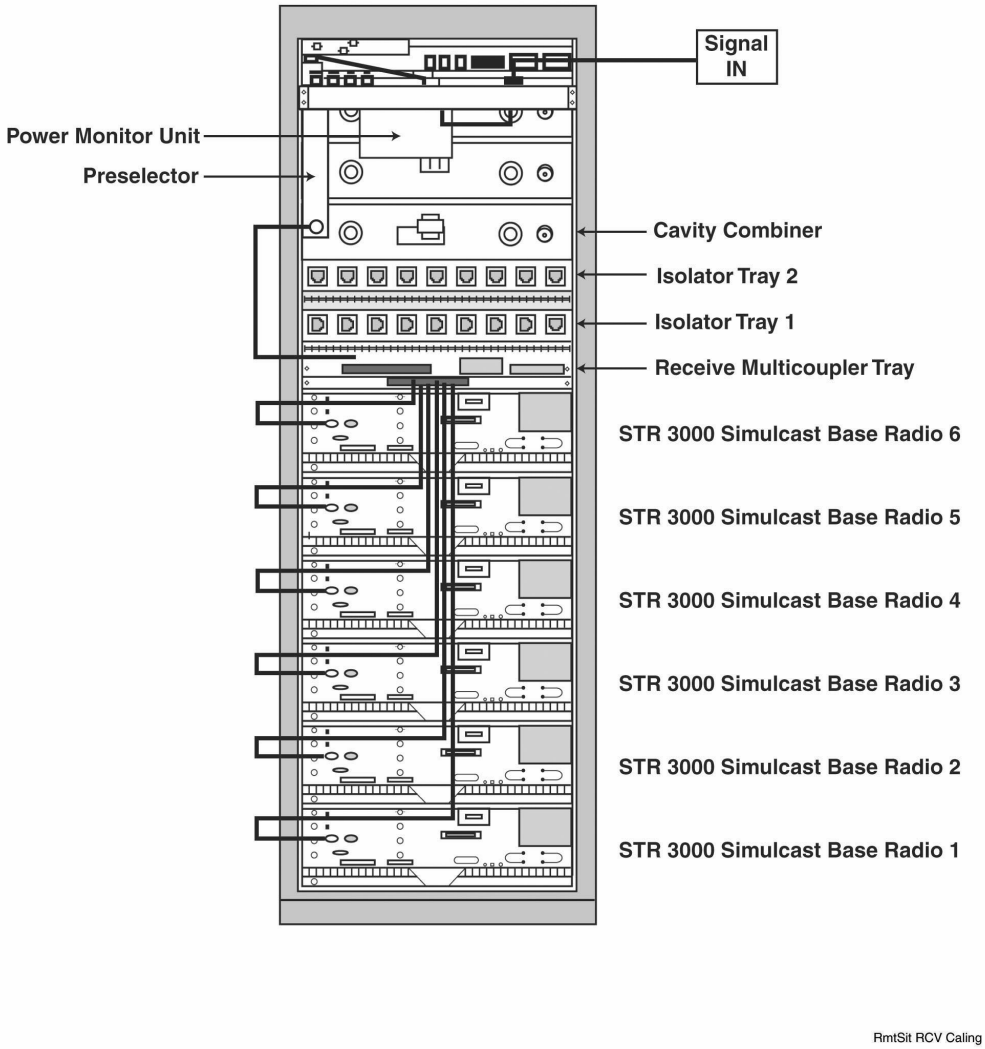

Connecting the V.24 Cabling

Table 5-7 lists the V.24 audio connections for the STR 3000 rack.

Table 5-7 V.24 Cable Connections

From STR 3000 Rack		Destination Device		Description
Port	**Connector Type**	**Port**	**Connector Type**	
Port PNL 1	RJ45 (V.24)	Channel Bank 1, SRU Port 1	RJ45 (V.24)	Connection to the prime site.
Port PNL 2	RJ45 (V.24)	Channel Bank 1, SRU Port 2	RJ45 (V.24)	Connection to the prime site.
Port PNL 3	RJ45 (V.24)	Channel Bank 1, SRU Port 3	RJ45 (V.24)	Connection to the prime site.
Port PNL 4	RJ45 (V.24)	Channel Bank 1, SRU Port 4	RJ45 (V.24)	Connection to the prime site.
Port PNL 5	RJ45 (V.24)	Channel Bank 1, SRU Port 5	RJ45 (V.24)	Connection to the prime site.
Port PNL 6	RJ45 (V.24)	Channel Bank 1, SRU Port 6	RJ45 (V.24)	Connection to the prime site.

Figure 5-8 shows the V.24 cabling layout for a six-channel STR 3000 rack.

Figure 5-8 V.24 Cabling in the STR 3000 Rack

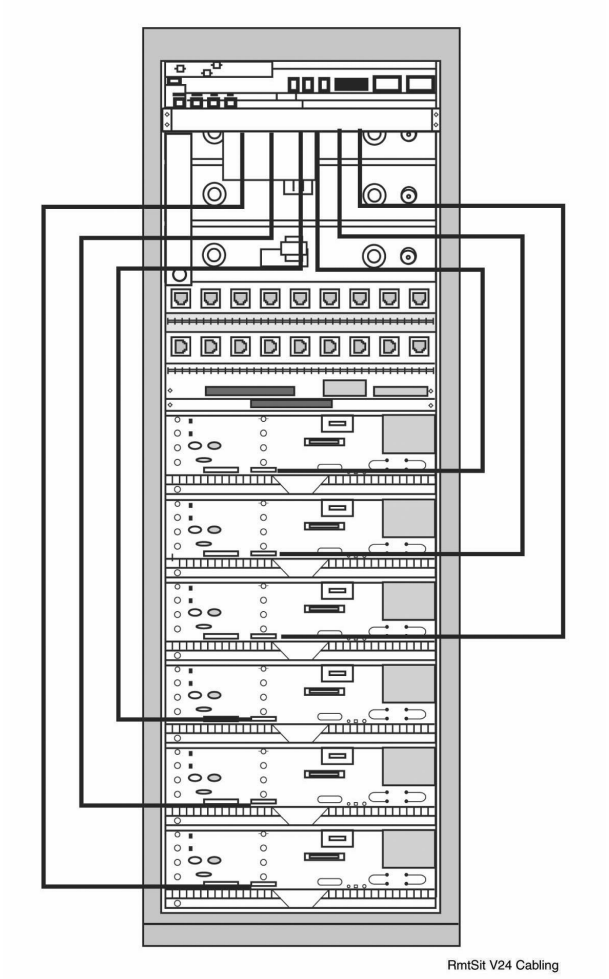

Connecting Cables for a Co-Located Remote Site

A co-located remote site is installed along with the prime site or very near to it. This allows the co-located remote site to connect directly into the prime site and use the same network structures.

Connect the cables listed in Table 5-8 from the STR 3000 rack at a co-located remote site:

- Ethernet cables
- Transmit cables
- Receive cables

Table 5-8 Cabling Connections from the STR 3000 Rack at a Co-Located Remote Site

From STR 3000 Rack		Destination Device		Description
Port	Connection Type	Port	Connectoin Type	
Ethernet In port on junction panel in the first cabinet	BNC	Port 1 on Hub	BNC	Ethernet LAN connection
Ethernet In port on the junction panel of succeeding cabinets	BNC	Ethernet out on panel	BNC	Ethernet LAN connection
Last cabinet	BNC with 50 ohm termination	Terminator on Ethernet Out	BNC with 50 ohm termination	Ethernet LAN connection
Top of cabinet	7/16 DIN N Type	Transmit antenna	7/16 DIN N Type	Transmit output from the base radio to the transmit antenna
Top of cabinet	7/16 DIN N Type	Receive antenna	7/16 DIN N Type	Receive antenna input into the STR 3000 rack

NOTE

Both ends of the Ethernet cabling run must be terminated.

Powering Up the STR 3000 Base Radio

Press the ON/OFF switch on the front of the power supply to apply power to the base radio. As the radio powers up, the LEDs on the front panel display the following activity:

- All LEDs initially blink.
- The SlnD LED blinks, indicating the software is initializing.
- After about 10 seconds, the V.24 and ON LEDs stay green, indicating that the power is on and the V.24 link is established.

Table 5-9 lists the LEDs, their corresponding functions, and the indications provided by various blinking states.

Table 5-9 LED Status Indicators on the Base Radio

LED Name	Color	Solid	Blinks Once per Second	Blinks Twice per Second	Solid Then Blinks off 1/4 Second
Station Operational (ON)	Green	All	N/A	N/A	N/A
Station Failure (Fail)	Red	FRU failure	• Ext Ref Failure • Rx Tx Unlock	Config	N/A
Service/Tx Inhibit (SVC)	Yellow	N/A	Service	SVC Tx Inh	N/A
Control (CTL)	Green	Control Ch	Failsoft	N/A	ISP Rx
Rx Active (Rx)	Green	Rx Active	Illegal Rx	N/A	N/A
PA Full/PA Low (PA)	Green	PA Active	N/A	N/A	N/A
Station Disable (StnD)	Red	FLASH	N/A	N/A	N/A
V.24 Link (V24)	Green	V24 Link	V24 Fail	N/A	N/A

Status Priorities for Multifunction LEDs

Some LEDs perform multiple functions for the base radio. Table 5-10 lists these LEDs and the order in which status indications are handled.

Table 5-10 Status Priority for Multifunction LEDs

Multifunction LED	Priority of Status (Highest to Lowest)
Fail	• FRU failure • External reference failure and unlock • Base radio operational mode
SVC	• Transmitter inhibited • Base radio operational mode
StnD	• Software download • PA inhibited • Receiver inhibited

General Operating Specifications

This section provides specifications for the STR 3000 rack, base radio, RFDS, transmitter, receiver, and receiver multicoupler.

Table 5-11 lists the operating specifications for an STR 3000 rack.

Table 5-11 General Operating Specifications for the STR 3000 Rack

Specification	Value or Range
Number of Channels	1-6
Number of Cabinets	1
Cabinet Height	211 cm (83 in.) (48 RU)
Footprint (W x D)	60 x 60 cm (24 x 24 in.)
System Weight	361 kg (795 lb)
Power Requirements	-48 VDC (43-60 VDC)
Temperature Range	0 to 50˚ C (32 to + 122˚ F)
Power Consumption	Typical: 2,700 W Maximum: 3,200 W
Antenna Connectors	Transmitter: DIN 7/16 Female Receiver: N-Female

Operating Specifications for the Base Radio

Table 5-12 lists the operating specifications for the base radio.

Table 5-12 Operating Specifications for the Base Radio

Specification	Value or Range
Dimensions	Height: 22.2 cm (8.75 in.) (5 RU) Width: 48.3 cm (19 in.) Depth: 41.9 cm (16.5 in.)
Weight	33 kg (73 lb)
Operating Temperature Range	0 to 50˚ C (32 to + 122˚ F)
Power Requirements	-48 VDC (41-60 VDC)
Power Dissipation	530 W (typical) 640 W (maximum)
Heat Dissipation	2,160 Btu maximum for 1 base radio 12,240 Btu maximum for 6 base radios See Table 5-17 for average heat dissipation for each base radio.
Rack Spacing	• Designed for mounting in an EIA/TIA standard 19-in. (48.26 cm) rack • Minimum of 15.24 cm (6 in.) between the cabinet and the wall • With doors, minimum of 53.34 cm (21 in.) is required to open the back door. **NOTE** Because of weight considerations, the installation should allow access to the rear of the unit.

Operating Specifications for the Transmitter

Table 5-13 lists the operating specifications for a transmitter.

Table 5-18 Operating Specifications for the Tower Top Amplifier

Installing the TRAK 9100 Simulcast Site Reference

The TRAK 9100 provides a composite 5 Mpps and 1 pps signal used for timing at a remote site. This section describes how the TRAK 9100 simulcast site reference is installed at a remote site.

Overview of the TRAK 9100 Simulcast Site Reference

A simulcast system uses signals from the Navstar Global Positioning Satellite (GPS) system to synchronize the audio from multiple transmitters. A GPS receiver needs to receive the 1 pps signal from at least four satellites before it can establish its exact geographical location.

The TRAK 9100 uses the satellite signal to derive a high-precision 1 pps signal used in the simulcast system for time launching. By launching signals at exactly the same time from multiple sites, destructive interference of the transmitted signals in overlap areas is minimized. In addition to controlling the launch, the use of GPS allows for variance in delay of the distribution network (T1/E1).

The TRAK 9100 simulcast site reference provides 1 pps and 5 Mpps reference signals for the following components at a remote site:

- Base radios
- Remote site channel bank
- Remote site hub

Figure 5-9 shows the modules and connections on the front view of the simulcast site reference.

Figure 5-9 Front View of the TRAK 9100 Simulcast Site Reference

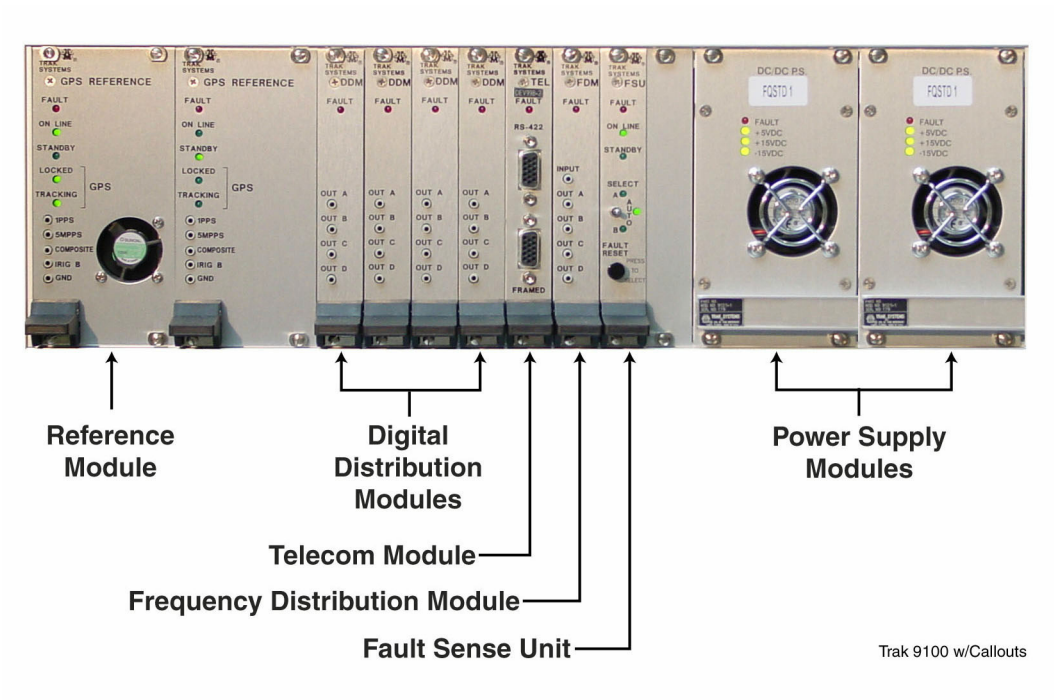

Hardware Modules in the TRAK 9100 Simulcast Site Reference

Table 5-19 lists the modules that comprise the TRAK 9100 simulcast site reference.

Table 5-19 TRAK 9100 Simulcast Site Reference Modules

Module	Description
Antenna	See "Installing the GPS Antenna" on page 5-27.
GPS Receiver (A1)	This module contains a crystal oscillator and generates the 1 pps and 5 Mpps reference signals based on received GPS timing signals.
GPS Receiver (A2)	A second oscillator is included for redundancy. (Module A2 does not include a front-panel cooling fan like Module A1.)
Power Supply	Converts AC input to DC voltages used by all other TRAK 9100 modules.
Frequency Distribution Module	Outputs the 1 pps and 5 Mpps reference signals along with composite signal.
Fault Sense Unit	Detects system failures and provides control, alarm, and status information.

Installing the TRAK 9100 Simulcast Site Reference in the Rack

The TRAK 9100 simulcast site reference is installed in an EIA/TIA 19-in. (48.26 cm) rack.

Grounding the Chassis

Connect the grounding cable to the ground lug. The ground lug is a screw on the back of the power supply located to the left of the AC power receptacles.

NOTE

Use 6 AWG wire and the appropriate lug connected to chassis ground through to the RGB.

Wiring for Power

The two AC outlets on the rear of the panel provide power to all of the modules in the TRAK 9100.

Installing an Expansion Rack

See "Installing TRAK 9200 Simulcast Site Reference for Expansion" on page 5-31.

Installing the GPS Antenna

The GPS antenna feeds the TRAK 9100 simulcast site reference, which provides a 5 Mpps/1 pps signal (5 Mpps signal at 1 pps repetition rate) to the base radios and other components at the remote site. This signal establishes timing functions for the transmit and receive frequencies for the base radios.

Perform Procedure 5-2 to install the GPS antenna.

Procedure 5-2 How to Install the GPS Antennas

1	Mount the GPS antenna with an unrestricted aerial down view to within 10˚ of the horizon in all directions.
2	Mount the antennas high enough to clear the peak of the site roof using the following guidelines: • For systems in the northern hemisphere, mount the GPS antennas so that a clear view of the southern sky is maintained. • For systems in the southern hemisphere, mount the GPS antennas so that a clear view of the northern sky is maintained.
3	Isolate the GPS antennas from RF interference by mounting the antennas at a distance of at least 3.66 m (12 ft.) horizontally from the other antennas.
4	Mount the GPS antennas to clear obstructions and provide a clear path. **NOTE** Adjacent structures (such as trees or buildings) are considered obstructions due to their wide and solid profiles. Adjacent antenna towers at the RF site which protrude into the required view (but have a minimal effect on GPS satellite reception due to their narrow, largely open profiles) are not considered obstructions.

IMPORTANT

The simulcast system will not operate properly if the GPS receiver is not locked onto at least four GPS satellites. The four satellites are used to establish a three-dimensional fix (latitude, longitude, and altitude) for the site.

The TRAK 9100 will free-run for a time period defined by configuration settings. However, after the specified period while still operating without the GPS satellite signals, the simulcast system will not operate. The GPS antennas must be properly positioned, and the cables and connectors must be properly maintained to ensure operation of the simulcast system. If the TRAK 9100 is powered down, the simulcast system will not operate properly until the GPS receiver has locked onto the signals from at least four GPS satellites. **This process takes approximately 13 to 25 minutes to complete.**

GPS Antenna Line Loss

CAUTION

Cutting the cable below a recommended minimum length can cause problems with signal strength overload. Refer to Appendix E in the TRAK 9100 Reference book.

The maximum allowable line attenuation between the antenna and the TRAK 9100 is 6 dB. This includes a 4 dB margin for attenuation from foliage. Installations in which the antenna has an unobstructed view of the sky may have a maximum line attenuation of 10 dB.

In a typical installation using 0.5-in., low density foam coaxial cable, the length of the cable run should never exceed 45.72 m (150 ft). This is sufficient for most installations.

When considering the use of larger cables, calculate the cable lengths allowing 4.5 dB of loss at 1.5 GHz. The remaining 1.5 dB of attenuation is provided by interior site cabling and connectors.

GPS Antenna Operating Specifications

Table 5-20 lists the operating specifications for the GPS antenna.

Table 5-20 Operating Specifications for the GPS Antenna

Specification	Value or Range
Physical Dimensions	Diameter: 8.89 cm (3.5 in.) Height: 10.16 cm (4.0 cm)
Weight	0.32 kg (0.7 lb) (excluding mast)
Operating Temperature	-40º to +85º C (-40º to 185º F)

ALARM INDICATION (NO LOCK ON GPS SIGNAL)

A system alarm indicates when the GPS signal cannot be located and that the antenna may need to be repositioned.

Cabling the TRAK 9100 Simulcast Site Reference

All output signal connections interfacing to the network are made via the rear panel. The connections are:

- Two power supply (AC or DC) connectors
- Two GPS antenna N-type connectors
- An RJ45 connector for 10Base-T to distribute Coordinated Universal Time (UTC) through Network Time Protocol (NTP)
- An RJ45 connector for Alarm (relay contacts) reporting
- A DB9 connector for Time of Day (TOD) output
- An RS232 DB9 connector for diagnostics (VT100)
- An IEEE-488 connector for digital distribution unit (DDU) TRAK 9200
- 24 BNC connectors for:
  - 1 pps
  - 5 Mpps
  - 1 pps + 5 Mpps composite signals, framed 1.544/2.048 Mbps TTL, and IRIG-B (or 10 MHz if desired) outputs depending on the type of modules plugged at the front panel.

NOTE

All cables are connected between the BNC T-adapters, which are mounted to the appropriate module connector.

The cabinet is equipped with cables (index no. 2) and T-adapters for connection to six base radios regardless of BR complement. Unused T-adapters are left unconnected. Unless the cabinet is to be used with other RF cabinets, 5 MHz/1 pps OUT connector must be terminated with a 50 ohm terminator.

Table 5-21 lists all of the cables from the front connections on the TRAK 9100 simulcast site reference. Table 5-22 lists the cables from the connections on the back of the TRAK 9100.

Table 5-21 Cabling from the Front Connections on the TRAK 9100 Simulcast Site Reference

From TRAK 9100		Destination Device		Description
Port	Connector Type	Port	Connector Type	
AC Input A	IEC 320	Power Outlet	Power	AC Power
AC Input B	IEC 320	Power Outlet	Power	AC Power
Ethernet IN	RJ45	Port 6 on the Remote Site LAN switch	RJ45	Path for the NTP data
Ethernet IN	RS-232	Port 2 on the MOSCAD NFM	RS-232	Path for diagnostic information to MOSCAD

Table 5-22 Cabling from the Rear Connections on the TRAK 9100 Simulcast Site Reference

From TRAK 9100		Destination Device		Description
Port	Connector Type	Port	Connector Type	
10Base-T	10Base-T (RJ45)	Remote Site LANSwi Port 5	10Base-T (RJ45)	NTP information
RS232 I/O	RS232	MOSCAD NFM2 Port 2	RS232	Diagnostic information routed to MOSCAD
Reference Output	24-pin D	Digital Distribution Unit (DDU) (where used)		Output to DDU

Powering Up the TRAK 9100 Simulcast Site Reference

The TRAK 9100 has the following three power outputs:

- +5 VDC
- +15 VDC
- -15 VDC

All three outputs have an LED indicator that turns green after the TRAK 9100 powers up. Figure 5-10 shows the power supply LEDs.

Figure 5-10 Power Supply Module with LED Indicators

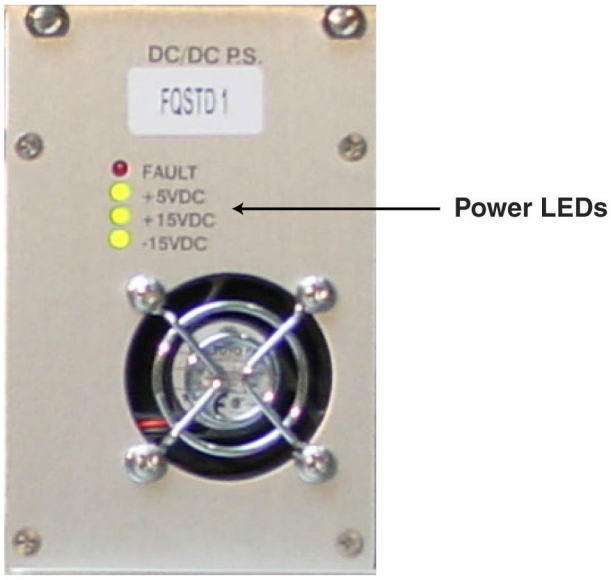

TRAK_9100_powerLEDs.jpg

Operating and Environmental Specifications

Table 5-23 lists the operating and environmental specifications for the TRAK 9100 simulcast site reference.

Table 5-23 TRAK 9100 Operating and Environmental Specifications

Specification	Value or Range
Physical Dimensions	Height: 13.34 cm (5.25 in.) (3U) Width: 48.26 cm (19 in.) Depth: 38.1 cm (15 in.)
Weight	Approximately 11.34 kg (25 lb) with all modules installed
Operating Temperature	–30˚ to +60˚ C (-22˚ to 140˚ F) with a rate of change <2˚ C/minute (<3.5˚ F/minute)
Power Requirements	100 to 240 VAC ± 10%, 48-63 Hz single-phase
Heat Dissipation	120 W at power-up, tapers to approximately 80 W within 15 minutes of power-up at 25˚ C (77˚ F)

Installing TRAK 9200 Simulcast Site Reference for Expansion

The TRAK 9200 is the optional expansion chassis which adds simulcast site reference ports. It provides 56 ports, arranged in four rows of 14 ports each.

Overview of the TRAK 9200 Simulcast Site Reference

The TRAK 9200 simulcast site reference differs from the TRAK 9100 simulcast site reference with respect to two modules: the power supply and the termination/fault logic unit.

The power supply has only one output (5 VDC). So the indicators differ from those referenced in "Powering Up the TRAK 9100 Simulcast Site Reference" on page 5-30. There are only two indicators, as follows:

- Green, indicating the 5 VDC power supply is operating properly.
- Red, indicating a fault with the power supply.

The fault logic unit serves the same function as the fault sense unit in the TRAK 9100. Figure 5-11 shows the rear view of the TRAK 9200.

Figure 5-11 Rear View of TRAK 9200

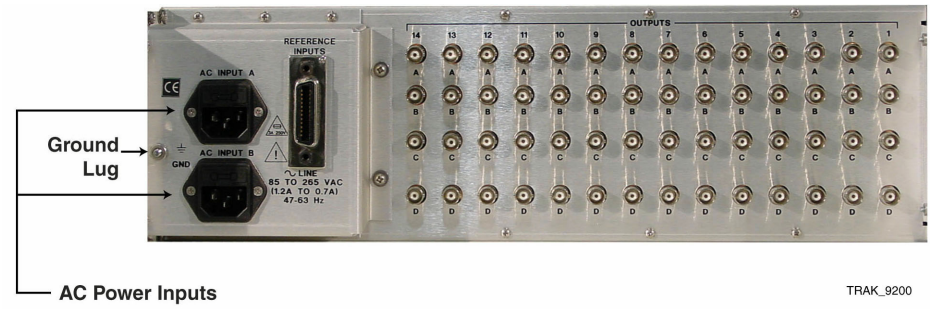

Cabling the TRAK 9200 Simulcast Site Reference

Table 5-24 lists the cabling for the TRAK 9200 simulcast site reference expansion.

Operating Specifications

Table 5-30 lists the operating and environmental specifications for the remote site hub.

Table 5-30 Remote Site Hub Operating and Environmental Specifications

Specification	Value or Range
Physical Dimensions	Height: 4.32 cm (1.7 in.) (1 RU) Width: 44.1 cm (17.4 in.) Depth: 17.0 cm (6.7 in.)
Weight	2.1 kg (4.6 lb)
Operating Temperature	0˚ to 50˚ C (32˚ to 122˚ F)
Power Requirements	85-244 VAC 50/60 Hz 120 W
Heat Dissipation	103 Btu/Hour

Installing the Simulcast Remote Site Router

The remote site router routes network management traffic from a simulcast remote site to the prime site.

Overview of the Simulcast Remote Site Router

The simulcast remote site router routes network management information from the remote site to the prime site through the High Speed Unit (HSU) card.

Figure 5-20 and Figure 5-21 respectively show the front and rear views of the simulcast remote site router.

Figure 5-20 Front View of the Simulcast Remote Site Router

S598_front.jpg

Figure 5-21 Rear View of the Simulcast Remote Site Router

S598_rear

Installing the Simulcast Remote Site Router

This section describes how to install the simulcast remote site router.

Grounding the Chassis

Some network topologies require a grounding stud, which is separate from the AC ground on the chassis of the networking equipment. If this type of grounding is required for the topology, perform Procedure 5-6 to connect the chassis ground.

Procedure 5-6 How to Connect a Chassis Ground

1	Terminate one end of a length of minimum 6 AWG wire with a compression lug.
2	Using a grounding screw, attach the lug to the rear of the chassis.
3	Terminate the other end of the wire on a permanently connected protective grounding conductor or RGB.

Wiring for Power

Power is provided to the simulcast remote site router by connecting a power cable to the power receptacle on the rear of the unit.

Cabling the Simulcast Remote Site Router

Table 5-31 lists the cable connections from the simulcast remote site router.

Table 5-31 Cable Connections from the Simulcast Remote Site Router

From Remote Site Router		Destination Device		Description
Port	Connector Type	Port	Connector Type	
LAN 1	RJ45	Remote Site Hub	RJ45	Ethernet connection only for co-located
LAN 2	RJ45	Remote Site Switch	RJ45	Ethernet connection between the hub and the prime site switch
Serial 3	60-pin FlexWAN	Channel Bank	60-pin FlexWAN	Ethernet connection between the hub and the channel bank
Serial 4	60-pin FlexWAN	Channel Bank	60-pin FlexWAN	Ethernet connection between the hub and the channel bank
WAN 5	RJ45	not used	RJ45	not used
WAN 6	RJ45	not used	RJ45	not used
Console	RS232/DB9	Console/Terminal, Serial Port	RS232/DB9	Communications connection between the router and a console or terminal

Powering Up the Simulcast Remote Site Router

Perform Procedure 5-7 to power up the simulcast remote site router and verify that it is working.

Procedure 5-7 How to Power Up the Simulcast Remote Site Router

1	Attach the power cable to the power receptacle.
2	Plug the power cable into the AC outlet.
3	Turn the power switch to the ON position.
4	Verify that the power LED is on.

The power-up process takes a few seconds. When the process has successfully completed, the LEDs on the front panel should be on or off, as described in Table 5-32.

Table 5-32 LED Status at Successful Startup

LED	Status
LAN	
Link	On
Active	On or blinking
Fault	Off
FlexWAN SERIAL	
Link	On
Active	On
Fault	Off
SYSTEM	
Status	All off
Fwd	Off or blinking
Power/Fault	Green
Run	On
Load	Off
Test	Off

Operating Specifications

Table 5-33 lists the operating specifications for the simulcast remote site router.

Table 5-33 Simulcast Remote Router Operating Specifications

Specification	Value or Range
Physical Dimensions	Height: 4.32 cm (1.7 in.) (1 RU) Width: 43.94 cm (17.3 in.) Depth: 30.48 cm (12.0 in.)
Weight	4.54 kg (10 lb)
Power Requirements	120 W
Heat Dissipation	137 Btu
Temperature	Operating: 5˚ to 40˚ C (41˚ to 104˚ F) Non-Operating: -40˚ to 75˚ C (-40˚ to 167˚ F)
Relative Humidity	Operating: 10% - 90% noncondensing Non-Operating: 10% - 90% noncondensing