User Information

User Information
Tune-up and user / operational manual information are provided in the following exhibits.

EXHIBIT	DESCRIPTION
D1	Tune-Up Procedure
D2	User / Operational Manual

User Information

Tune-Up Procedure
Aside from the 3rd party cavity combiners, there is no field tune-up procedure. All adjustments are software controlled and are pre-set at the factory. Certain station operating parameters can be changed via man-machine interface (MMI) commands, within predetermined limits. Examples include transmit / receive operating frequencies and transmitter power level.

For information on tuning the cavity combiners, which is required only if replaced in the field, please refer to the User / Operational Manual.

User Information

Operational or User's Manual
The manual should include instruction, installation, operator, or technical manuals with required 'information to the users'. This manual should include a statement that cautions the user that changes or modifications not expressly approved by the party responsible for compliance could void the user's authority to operate the equipment. The manual shall include RF Hazard warning statements, if applicable.

This product is installed in restricted access locations only, thus only authorized service personnel have access to the product. As such, a high level User's Installation / Operating instruction manual for the product is not published.

Content from the document "MTS LITE, MTS 2 AND MTS 4 INSTALLATION, CONFIGURATION AND BASIC SERVICE MANUAL" (part number 6802800U74-AD, September 2014) has been included as part of this filing package.

Due to space constraints, the full electronic version of this manual is not included in its entirety. The following chapters have been removed from the full document as these chapters are not intended for the general 'user':

Chapter 3: Site Preparation
Chapter 4: Hardware Installation
Chapter 5: Interconnection and Internal Cabling
Chapter 6: Configuration and Testing
Chapter 13: MTS Troubleshooting

Upon request, published manuals will be sent to the commission and/or telecommunication certification body (TCB). All of the descriptions, block diagrams, and schematics that are included in this filing package are current as of the package submittal date.

DIMETRA™

Dimetra IP Scalable (DIPS)

Dimetra IP Compact (DIPC)/Scalable Dimetra IP (SDIP)

Dimetra IP Micro/Dimetra IP LiTE

MTS LITE, MTS 2 AND MTS 4 INSTALLATION, CONFIGURATION AND BASIC SERVICE MANUAL

September 2014

6802800U74-AD

© 2014 Motorola Solutions, Inc. All rights reserved

Copyrights

The Motorola products described in this document may include copyrighted Motorola computer programs. Laws in the United States and other countries preserve for Motorola certain exclusive rights for copyrighted computer programs. Accordingly, any copyrighted Motorola computer programs contained in the Motorola products described in this document may not be copied or reproduced in any manner without the express written permission of Motorola.

© 2014 Motorola Solutions, Inc. All Rights Reserved

No part of this document may be reproduced, transmitted, stored in a retrieval system, or translated into any language or computer language, in any form or by any means, without the prior written permission of Motorola Solutions, Inc.

Furthermore, the purchase of Motorola products shall not be deemed to grant either directly or by implication, estoppel or otherwise, any license under the copyrights, patents or patent applications of Motorola, except for the normal non-exclusive, royalty-free license to use that arises by operation of law in the sale of a product.

Disclaimer

Please note that certain features, facilities, and capabilities described in this document may not be applicable to or licensed for use on a particular system, or may be dependent upon the characteristics of a particular mobile subscriber unit or configuration of certain parameters. Please refer to your Motorola contact for further information.

Trademarks

MOTOROLA, MOTO, MOTOROLA SOLUTIONS, and the Stylized M Logo are trademarks or registered trademarks of Motorola Trademark Holdings, LLC and are used under license. All other trademarks are the property of their respective owners.

European Union (EU) Waste of Electrical and Electronic Equipment (WEEE) directive

The European Union's WEEE directive requires that products sold into EU countries must have the crossed out trash bin label on the product (or the package in some cases).

As defined by the WEEE directive, this cross-out trash bin label means that customers and end-users in EU countries should not dispose of electronic and electrical equipment or accessories in household waste.

Customers or end-users in EU countries should contact their local equipment supplier representative or service centre for information about the waste collection system in their country.

CMM Labeling and Disclosure Table

The People's Republic of China requires that our products comply with China Management Methods (CMM) environmental regulations. (China Management Methods refers to the Regulation Management Methods for Controlling Pollution by Electronic Information Products.) Two items are used to demonstrate compliance; the Label and the Disclosure Table.

The label is placed in a customer visible position on the product. The first of the following examples means that the product contains no hazardous substances; the second means that the product contains hazardous substances, and has an Environmental Friendly Use Period (EFUP) of fifty years.

The Environmental Friendly Use Period (EFUP) is the period (in years) during which the Toxic and Hazardous Substances (T&HS) contained in the Electronic Information Product (EIP) will not leak or mutate causing environmental pollution, or bodily injury from the use of the EIP.

The Disclosure Table, printed in simplified Chinese, is included with each customer order. An example of a Disclosure Table (in Chinese) follows:

Disclosure table

部件名称	有毒有害物质或元素					
	铅 (Pb)	汞 (Hg)	镉 (Cd)	六价铬 (Cr^{6+})	多溴联苯 (PBB)	多溴二苯醚 (PBDE)
金属部件	×	O	×	×	O	O
电路模块	×	O	×	×	O	O
电缆及电缆组件	×	O	×	×	O	O
塑料和聚合物部件	O	O	O	O	O	×

O： 表示该有毒有害物质在该部件所有均质材料中的含量均在 SJ/T11363-2006 标准规定的限量要求以下。

×： 表示该有毒有害物质至少在该部件的某一均质材料中的含量超出SJ/T11363-2006 标准规定的限量要求。

Service Information

Government Technical Support (GTS), EA Solutions Support Centre

The Government Technical Support (GTS), EA Solutions Support Centre provides a remote Technical Support Service to help customers resolve technical issues and quickly restore networks and systems. This team of highly skilled professionals is available to customers with current service agreements in place that include the Technical Support Service. The EA GTS technical experts may be accessed through the EMEA Integrated Call Center either electronically or using the telephone numbers listed below. If you are unsure whether your current service agreement entitles you to benefit from this service, or if you would like more information about the Technical Support Service, contact your local customer support or account manager for further information.

Contact Details

Email: *essc@motorolasolutions.com*

Table 1: List of Telephone Numbers

Country	In Country Number to Dial
AUSTRIA	01206091087
DENMARK	043682114
FRANCE	0157323434
GERMANY	06950070204
ITALY	0291483230
LITHUANIA	880 030 828
NETHERLANDS	0202061404
NORWAY	24159815
PORTUGAL	0217616160
RUSSIA	810 800 228 41044
	(Alternative 810 800 120 1011)
SAUDI ARABIA	800 844 5345
SOUTH AFRICA	0800981900
SPAIN	0912754787
UNITED KINGDOM	02030 277499
All Other Countries	+44 2030 277499

European Systems Component Centre (ESCC)

The European Systems Component Centre provides a repair service for infrastructure equipment. Customers requiring repair service should contact the Customer Information Desk to obtain a Return Material Authorization number. The equipment should then be shipped to the following address unless advised otherwise.

Motorola GmbH, European Systems Component Centre, Am Borsigturm 130,13507 Berlin, Germany

Contact Details

- E-Mail: *escc.admin@motorolasolutions.com*

- Telephone: +49 (0) 30 66861404
- Telefax: +49 (0) 30 66861426
- Monday – Friday 08:00 am to 06:00 pm (CET)

Parts Identification and Ordering

Request for help in identification of non-referenced spare parts should be directed to the Customer Care Organization of Motorola's local area representation. Orders for replacement parts, kits, and assemblies should be placed directly on Motorola's local distribution organization or through the Extranet site Motorola Online at *https://emeaonline.motorolasolutions.com*.

Updated Versions of Manuals

Verify the current version of the manual at our Extranet site, Motorola Online: *https://emeaonline.motorolasolutions.com*.

Your Input

Send questions and comments regarding user documentation to *documentation@motorolasolutions.com*

We welcome your feedback on this and other Motorola manuals. To take a short, confidential survey on Motorola Customer Documentation, go to *docsurvey.motorolasolutions.com* or scan the following QR code with your mobile device to access the survey.

Document History

Version	Description	Date
6802800U74–A	Initial Edition	July 2006
6802800U74–B	Minor changes	Aug. 2006
6802800U74–C	Table 4–4 updated	Aug. 2006
	Table 4–5 updated and note inserted	
	Table 5–6 updated	
6802800U74–D	Service Cable and Connector Box Description section updated	Oct. 2006
6802800U74–E	Updates throughout the manual	Feb. 2007
6802800U74–F	Expansion Cabinet updates throughout the manual, and addition of Expansion Options chapter.	Aug. 2007
6802800U74–G	800 MHz updates throughout the manual.	Nov. 2007
6802800U74–H	BTS Q108 SPU updates, including the addition of redundant power connector on the Site Controller.	Mar. 2008
6802800U74–J	• Regulatory CE Labeling Compliance updated • *MTS 4 Outdoor Enclosure on page 403* added • Added info about Base Radio dekey when Standby SC is powered on. • Added info about frequencies in receiver band that can cause high bit error rate to occur • Updated FRU number for RX Splitter	June 2008
6802800U74–K	• Updated MTS site link configuration info in Table 8–9 • Updated RF cabling/Connections for MTS 4 with two TX/RX antennas and up to one additional RX antenna (Table 5–13 and Figure 5–12) • Revision to FRU numbers for MTS fan and Hybrid Combiner • Other minor updates	Dec. 2008
6802800U74–L	• Updated manual with TEDS compatibility. • Updates to the Power Supply Unit (PSU) DC Input Power. • Other minor updates throughout the manual.	Apr. 2009
6802800U74–M	• Ethernet Site Link Cabling hardware installation information added. • Ethernet Site Link cabling and interconnection added. • Configuring Ethernet Site Link added.	June 2009
6802800U74–N	• Ethernet Site Link Retro-fit kit and configurations added. • Added section *MTS LVD Kit Installation* to *Hardware Installation* chapter.	Sep. 2009
6802800U74–P	Updated the following sections:	July 2010

Table continued…

Version	Description	Date
	• 260 MHz additions throughout the manual. • Updated information on LVD Kit Installation • Updated MTS 4 Duplexer FB diagram • Updated procedure *How to configure E1 links* • other minor updates	
6802800U74–R	Added non-duplexed MTS 2 configurations	Sep. 2010
6802800U74–T	Added MTS LiTE	Dec. 2010
6802800U74–U	• Added Procedure *How to Upgrade the ATCC Firmware* • Updated Procedure *How to Replace Site Controller Lithium Battery*	June 2011
6802800U74–V	• Added section *Tuning the MTCC in a BTS in Tetra Application Mode on page 256* • Removed reference to obsolete item (surge arrestor for an MTS4 in 450 MHz band for TX/RX and/or RX antennas) • Added warning not to key the base station without a proper load • Added New part numbers for duplexer and preselector (supplied by Fingu, replaces Power Wave) • General Defect Fixing	Mar. 2012
6802800U74–W	Updated the following: • *MMI Commands and MTS Modes of Operation on page 203* • *Table 41: RF Cabling/Connections for MTS LiTE with One TX and One RX ant. No Diversity on page 162* • *Service Cable and Connector Box Description on page 207* • *Setting Base Radio IP on page 217* *Station Verification Procedures on page 220* • Added *Configuring the Base Radio VSWR on page 220* • *Configuring the Base Radio Receiver on page 217* • *XHUB Controller – Front Panel Indicators (LED) on page 282* • *XHUB Controller – Front Panel Connectors on page 284* • *Troubleshooting: General Check of a Site Controller File on page 318* • Added *Ethernet Site Link on page 328*. • *Base Radio Alarms on page 333* • *Miscellaneous Troubleshooting on page 355* • *Field Replaceable Units (FRUs) on page 405* Restoration content moved to the respective *Backup And Restore Including FRU/FRE* manuals (for Dimetra IP Scalable and Dimetra IP Compact systems) or *Service Manual* (for Dimetra IP Micro system).	May 2012
6802800U74–Y	Added:	Dec.2012

Table continued…

Version	Description	Date
	• *Verifying and Tuning the Receiver RSSI Levels on page 224* Updated: • *Ethernet Site Link on page 328* • *Site Controller – Front Panel Indicators (LED) on page 267*	
6802800U74–AA	Added: • *Encrypted Ethernet Site Links on page 331* • *Verifying Encryption Capability on page 332* Updated: • *Verifying and Tuning the Receiver RSSI Levels on page 224*	Feb. 2013
6802800U74–AB	Updated the following: • *Encrypted Ethernet Site Links on page 331* • *Verifying Encryption Capability on page 332* • *Field Replaceable Units for MTS LiTE on page 405* • *Field Replaceable Units for MTS 2 on page 407* • *Field Replaceable Units for MTS 4 on page 409* • *Miscellaneous Troubleshooting on page 355*	Mar. 2014
6802800U74–AC	Updated: • *RF Cabling – MTS 4, No Diversity on page 172*	July 2014
6802800U74–AD	Added: • *Resetting the RTC Battery Status on page 275* Updated: • *Checking if the Site Controller Lithium Battery Needs Changing on page 276* • *Replacing the Site Controller Lithium Battery on page 276*	Sept. 2014

Contents

Copyrights 3
CMM Labeling and Disclosure Table 5
Service Information 7
Document History 9
List of Figures 23
List of Tables 29
List of Processes 33
List of Procedures 35
About MTS LiTE, MTS 2 and MTS 4 Installation, Configuration and Basic Service Manual 37
- What Is Covered In This Manual? 37
- Helpful Background Information 37
- Related Information 37
- Icon Conventions 38
- Style Conventions 39
- Regulatory CE Marking Compliance 39

Chapter 1: MTS Overview 41
- MTS Platform Description 41
- MTS LiTE Components 42
- MTS 2 Components 43
- MTS 4 Components 45
- Expansion Cabinet Components 46
- MTS Modules 47
  - RF Distribution System 47
    - Preselector 47
    - Duplexer 48
    - Post Filter 48
    - Cavity Combiners 48
    - Hybrid Combiner 49
    - Rx Splitter 49
  - Site Controller Module 49
  - XHUB 49
  - Base Radio Module 50
    - Base Radio Transceiver 50
    - Base Radio Power Amplifier 50
  - Power Supply Unit 50
    - Backup Battery 50
  - Cooling Fans 50

Chapter 2: General Safety 51
- General Safety Precautions 51
- Mains Safety 52
- Battery Safety 52

Chapter 3: Site Preparation 55

Site Planning....55
Site Survey....55
Site Selection Considerations....56
Cabinets Installation Considerations....56
MTS LiTE Cabinet Considerations....56
MTS 2 Cabinet Considerations....58
MTS 4 Cabinet Considerations....59
Expansion Cabinet Considerations....61
Antenna Installation Considerations....63
Network Interface Installation Considerations....64
MTS Installation Special Considerations....64
Environmental Considerations....64
MTS Installation Electrical Requirements for MTS Site....65
Applicable Codes and Practices....65
AC and DC Power Supplies....66
Service Current Rating....66
AC and DC Current Load....72
Backup Battery....72
Surge Arrestors....72
Power Panel....72
User Alarms, Control Outputs, and Door Alarm....73
Grounding Requirements....73

Chapter 4: Hardware Installation....75
Installation Overview....75
Installation Personnel....75
Receiving the MTS Equipment....75
Installation Prerequisites....76
Cabinet Transportation....76
Safety Considerations....77
MTS LiTE and MTS 2 Cabinets Transportation....77
Moving the MTS 4 and Expansion Cabinet....77
Cabinet Installation....79
Cabinet Bracing Considerations....80
Floor Mounting Instructions....80
Installing the Cabinet Using the Mounting Brackets....80
Installing the Cabinet Using the Mounting Plate....82
Mounting Plate....82
Installing the Mounting Plate....83
Securing Cabinet to a Mounting Plate....84
Wall Fixing....85
Electrical Connections....86
Grounding Connection....86
Grounding the Equipment Cabinet....88
Battery System Grounding....89
Checking Grounding Connections....89
Power Supply Connections....89
-48 VDC Input Power and Backup Battery Charging Connections....89
Connecting -48 VDC Power Source to the Equipment Cabinet....91
100–240 VAC Input Power Connections....93
Connecting 100–240 VAC Power Source to Equipment Cabinet....95
Backup Battery Sensor Connections....96
Connecting the Backup Battery Sensor to the Equipment Cabinet....97
MTS LVD Kit Installation....98
Installing the MTS LVD Kit....100

RF Antenna Connections....102
Expansion Cabinet Connections....106
TX Connections....106
Connections between Site Controller and XHUB Controller....107
Power Connection to the XHUB Controllers....108
CAN Bus Cabling....109
RX Connection....109
GPS Connections....110
GPS Site Reference Operation Modes....111
Tracking Criteria....112
GPS Start Up....112
Remote GPS Antenna/Receiver Connection....113
Remote GPS Receiver Requirements....114
Remote GPS Receiver Cabling....114
GPS Antenna Connection....116
GPS Antenna Line Loss....118
GPS Interference Avoidance....118
X.21, E1-120Ω Cabling....118
Ethernet Site Link Cabling....121
Ethernet Site Link Retrofit Kit....122
Connecting Ethernet Site Link Retrofit Kit for MTS 2 (old JP)....123
Connecting Ethernet Site Link Retrofit Kit for MTS 2 (new JP)....123
Connecting Ethernet Site Link Retrofit Kit for MTS 4....123
Connecting Ethernet Site Link Retrofit Kit for MTS 4 with Expansion Cabinet (old JP)....124
Connecting Ethernet Site Link Retrofit Kit for MTS 4 with Expansion Cabinet (new JP)....124
External Alarm Cabling....124
Performing a Final Check-Out after Installation....127
Checking the Cabinet after Setup....127
Powering Up the MTS....127
Recommended Installation Tools, Parts, and Test Equipment....127
Recommended Installation Tools....128
Recommended Test Equipment....128
Recommended Parts....129
Recommended Torque....130
Mounting Screws....130

Chapter 5: Interconnection and Internal Cabling....135

AC/DC Power Cabling....135
AC/DC Power Cabling – MTS LiTE....135
AC/DC Power Cabling – MTS 2....136
AC/DC Power Cabling – MTS 4....137
AC/DC Power Cabling – Expansion Cabinet....140
User Alarms/Controls, X.21, RGPS, and GPS Cabling....141
User Alarms/Controls, X.21, RGPS, and GPS Cabling – MTS LiTE....142
User Alarms/Controls, X.21, RGPS, and GPS Cabling – MTS 2....143
User Alarms/Controls, X.21, RGPS, and GPS Cabling –MTS 4....144
E1 and Ethernet Cabling....147
E1 and Ethernet Cabling – MTS LiTE....147
E1 and Ethernet Cabling – MTS 2....148
E1 and Ethernet Cabling – MTS 4....149
E1 and Ethernet Cabling – Expansion Cabinet....151
Ethernet Site Link Cabling....152
Ethernet Site Link Cabling – MTS LiTE....153
Ethernet Site Link Cabling – MTS 2....153
Ethernet Site Link Cabling – MTS 4 with Single Site Controller....154

Ethernet Site Link Cabling – MTS 4 with Dual Site Controller..... 157
Ethernet Site Link Cabling – MTS 4 Expansion Cabinet with Single Site Controller..... 159
Ethernet Site Link Cabling – MTS 4 Expansion Cabinet with Dual Site Controller..... 160
RF Cabling..... 162
RF Cabling – MTS LiTE with One TX and One RX Antenna, No Diversity..... 162
RF Cabling – MTS LiTE with One TX/RX Antenna..... 163
RF Cabling – MTS LiTE with One TX and Two RX Antennas..... 164
RF Cabling – MTS 2, No Diversity..... 165
RF Cabling – MTS 2 with One TX Antenna..... 166
RF Cabling – MTS 2 with One TX/RX Antenna..... 168
RF Cabling – MTS 2 with Two TX/RX Antennas..... 170
RF Cabling – MTS 4, No Diversity..... 172
RF Cabling – MTS 4 with One TX/RX Antenna..... 174
RF Cabling – MTS 4 with Two TX/RX Antennas..... 176
RF Cabling – MTS 4 with One TX Antenna..... 178
RF Cabling – Expansion Cabinet with One TX/RX Antenna..... 180
RF Cabling – Expansion Cabinet with Two TX/RX Antennas..... 184
RF Cabling – Expansion Cabinet with One TX Antenna..... 187
RF Cabling – Expansion Cabinet with Two TX Antennas..... 190
CAN Bus Cabling..... 193
CAN Bus Cabling – MTS LiTE 193
CAN Bus Cabling – MTS 2..... 193
CAN Bus Cabling – MTS 4..... 195
CAN Bus Cabling – Expansion Cabinet..... 199

Chapter 6: Configuration and Testing..... 203
Setup and Testing Overview..... 203
Preparing for Configuration and Testing..... 203
MMI Commands and MTS Modes of Operation..... 203
Logging on to the Site Controller Application through Serial Connection..... 204
Logging on to the Base Radio Application through Serial Connection..... 204
Logging on to the BOOT1 mode..... 205
Logging on to the Test Application..... 205
Test Equipment..... 206
Service Cable and Connector Box Description..... 207
Setting Up Service Terminal..... 209
CAN Bus Configuration..... 209
PSU CAN Bus Commands..... 209
Fans CAN Bus Commands..... 210
DPM CAN Bus Commands..... 210
ATCC CAN Bus Commands..... 211
Other CAN Bus Commands..... 211
Configuring and Verifying the Site Controller..... 211
Setting Up the Site Controller..... 212
E1 Connection Test..... 212
X.21 Connection Test..... 212
Site Reference Check..... 213
Configuring and Verifying the Base Radio..... 213
Base Radio Startup Sequence..... 213
Base Radio Position and Receivers Selection..... 215
Setup and Access to Base Radio Position..... 216
Setting and Accessing Base Radio Position Using Test Application..... 216
Setting and Accessing Base Radio Position Using Boot1..... 217
Setting Base Radio IP..... 217
Configuring the Base Radio Receiver 217

Corrective Actions for the Base Radio Receiver Configuration....218
Configuring the pm_config....219
Configuring the Base Radio VSWR....220
Station Verification Procedures....220
Verifying the Base Radio Software Revision....220
Upgrading the Base Radio Test Application Software (Optional)....220
Transmitter Verification....221
Receiver Verification....223
Displaying Base Radio Alarms....226
Viewing the Transmit Spectrum (Optional)....227
Synchronizing Non-Volatile Memory (NVM) Regions....227

Chapter 7: Radio Frequency Distribution System....229
RFDS Theory of Operation....229
CAN Bus....230
RFDS Frequency Band and Bandwidth....230
MTS LiTE and MTS 2 RFDS....230
MTS LiTE and MTS 2 Filter Tray....231
MTS LiTE / MTS 2 Preselector....234
Replacing the MTS LiTE / MTS 2 Preselector....236
MTS LiTE / MTS 2 Duplexer....237
Replacing the MTS LiTE / MTS 2 Duplexer....239
Hybrid Combiner....241
Replacing the Hybrid Combiner....241
MTS 4 RFDS....242
MTS 4 Filter Tray....242
MTS 4 Preselector....244
Replacing the MTS 4 Preselector....246
MTS 4 Duplexer....247
Replacing the MTS 4 Duplexer....249
Hybrid Combiner in MTS 4....250
Post Filter....250
Replacing the Post Filter....251
Cavity Combiner....253
Cavity Combiner - Theory of Operation....254
Replacing the Cavity Combiner....254
Tuning the MTCC in a BTS in Tetra Application Mode....256
Expansion Cabinet RFDS....257
RX Splitter....260
Replacing the Expansion Cabinet RX Splitter....261
Cavity Combiner....262

Chapter 8: Site Controller....263
Site Controller – Theory of Operation....264
Site Controller – Indicators, Switches, and Connectors....265
Site Controller – Front Panel....266
Site Controller – Front Panel Indicators (LED)....267
Site Controller – Front Panel Switches....269
Site Controller – Front Panel Connectors....270
Site Controller Rear Panel....271
Site Controller – Rear Panel Connectors....271
Site Controller CAN Bus....271
Updating CAN Bus TrackID Mapping List....274
Site Controller – GPS Module....275

Site Controller – Lithium Battery....275
Resetting the RTC Battery Status....275
Checking if the Site Controller Lithium Battery Needs Changing....276
Replacing the Site Controller Lithium Battery....276

Chapter 9: XHUB Controller....279
XHUB Controller – Theory of Operation....280
XHUB Controller – Indicators, Switches, and Connectors....281
XHUB Controller – Front Panel....282
XHUB Controller – Front Panel Indicators (LED)....282
XHUB Controller – Front Panel Switches....284
XHUB Controller – Front Panel Connectors....284
XHUB Controller – Rear Panel....284
XHUB Controller – Rear Panel Connectors....284
Replacing the XHUB Controller....285
XHUB Controller – FRU....285

Chapter 10: Base Radio....287
Base Radio – Overview....287
Base Radio – Theory of Operation....288
Transceiver (XCVR)....290
Power Amplifier....290
Base Radio – Indicators and Connectors....291
Replacing the Base Radio....293
Electrostatic Discharge Precaution....293
Restoring the Base Radio....294
Removing the Base Radio....294
Reinstalling the Base Radio....294

Chapter 11: Power Supply Unit....295
Power Supply Unit (PSU) – Theory of Operation....295
PSU CAN Bus Monitoring, Alarms, and Controls....296
Backup Battery....297
Backup Battery Charging Procedure....297
Fans....298
Power Supply Unit (PSU) Indicators, Switches, and Connectors....298
PSU LED Indicators....299
PSU Switch....300
PSU Connectors....301
Replacing the Power Supply Unit (PSU)....302
Removing the Power Supply Unit (PSU)....302
Installing the Power Supply Unit (PSU)....302
Updating the Mapping List with the New PSU TrackID....303

Chapter 12: Cooling Fans....305
Cooling Fans Overview....305
Cooling Fans Theory of Operation....305
PSU Fan Control....306
Alarms and Controls Available Through PSU CAN Bus Interface....306
Airflow....307
Cooling....309
Replacing the Cooling Fans....309

Chapter 13: MTS Troubleshooting..... 311
Site Controller Troubleshooting.....311
Site Controller Fault Indications..... 311
LED Fault Indications..... 311
Troubleshooting Flow Chart..... 315
Troubleshooting: Power..... 315
Troubleshooting: status sc.....316
Troubleshooting: SC Config File..... 317
Troubleshooting: status bts.....317
Troubleshooting: BRC Config Files and Code File..... 317
Troubleshooting: General Check of a Site Controller File.....318
MMI Fault Indications.....319
Troubleshooting: GPS and Site Reference Faults..... 319
GPS Receiver Detailed Troubleshooting..... 321
Troubleshooting Site Link Faults.....323
Other Site Controller Symptoms..... 333
Base Radio / RFDS / Miscellaneous Troubleshooting.....333
Base Radio Troubleshooting..... 333
Base Radio Alarms.....333
Recommended Test Equipment.....350
Troubleshooting Procedures.....351
Routine Checkout.....351
Reported/Suspected Problems.....352
Base Radio Fault Indications.....354
Miscellaneous Troubleshooting..... 355

Chapter 14: Technical Specifications.....357
Environmental and Standards Specifications.....357
Environmental Specifications.....357
Standards Specifications.....358
Cabinet and Module Specifications.....359
MTS Cabinets Frequency Range.....359
Dimensions of the MTS Cabinets..... 359
RF Specifications..... 360
Transmitter Specifications.....361
Receiver Specifications..... 364
Site Controller Specifications.....366
Internal GPS Module Input Specifications.....366
MTS LiTE / MTS 2 Duplexer Specifications..... 366
MTS LiTE / MTS 2 Preselector Specifications.....366
MTS 4 Duplexer Specifications..... 367
MTS 4 Post Filter Specifications.....367
MTS 4 Preselector Specifications..... 367
Auto Tune Cavity Combiner (ATCC) Specifications..... 368
Manual Tune Cavity Combiner (MTCC) Specifications..... 368
Hybrid Combiner Specifications.....368
Base Radio Specifications.....369
Power Supply Unit Specifications.....369
XHUB Controller Specifications.....370
RX Splitter Specifications.....370
MTS LiTE, MTS 2, and MTS 4 Connectors.....371

Chapter 15: Expansion Options.....373
Additional Base Radio for MTS 2.....373
Cable Connections.....374
Adding an Additional Base Radio to MTS 2.....377
Installing an Additional Base Radio to MTS 2.....378
Installing the Hybrid Combiner.....379
Configuration.....379
Additional Module Cage for MTS 4.....380
Adding an Additional Module Cage to MTS 4.....380
Configuration.....381
Additional Base Radio for Existing Module Cage in MTS 4.....381
Cable Connections.....382
Adding an Additional Base Radio to MTS 4.....388
Configuration.....389
Redundant Site Controller.....389
Adding a Redundant Site Controller.....390
Installing a Second Site Controller.....391
Configuring Redundant Site Controller.....392
Performing Site Controller Hardware Pre-Checks.....392
Configuring Site Controller Configuration Files.....393
Configuring Ethernet Ports.....393
Configuring Site Controller IDs.....394
Expansion from Two-Channel to Four-Channel Cavity Combiner.....394
Cable Connections.....395
Adding the Four-Channel Cavity Combiner.....396
Installing the Cavity Combiner into the Cabinet.....397
Configuration.....397
Hybrid Combiner Expansion.....398
Installing an additional Hybrid Combiner.....398
Configuration.....398
Expansion from MTS 2 to MTS 4 Cabinet.....398
Expanding from MTS 2 to MTS 4.....398
Extracting the Module Cage from MTS 2.....398
Assembling the Module Cage in the MTS 4 Cabinet.....400
Configuration.....401
Redundant XHUB Controller.....401
Adding a Redundant XHUB Controller.....401
Configuration.....402

Chapter 16: MTS 4 Outdoor Enclosure.....403

Appendix A: Field Replaceable Units (FRUs).....405
Field Replaceable Units for MTS LiTE.....405
Field Replaceable Units for MTS 2.....407
Field Replaceable Units for MTS 4.....409
Surge Arrestors and Suppliers.....415
AC Power and E1/X.21 Interface Surge Arrestors.....415
Antenna Surge Arrestors.....416
Lightning Arrestors.....416

Appendix B: Planned Maintenance Inspection (PMI).....417

Appendix C: Static Precautions and ESD Strap..... 419
Static Sensitive Precautions.....419
ESD Wrist Strap Safety Precautions..... 419

Appendix D: TETRA/Dimetra Acronyms..... 423

List of Figures

Figure 1: MTS LiTE Cabinet 42
Figure 2: MTS 2 Cabinet 44
Figure 3: MTS 4 Cabinet 45
Figure 4: MTS Expansion Cabinet 46
Figure 5: MTS LiTE Cabinet Dimensions 57
Figure 6: Suggested MTS LiTE Site Layout 57
Figure 7: MTS 2 Cabinet Dimensions 58
Figure 8: Suggested MTS 2 Site Layout 59
Figure 9: MTS 4 Cabinet Dimensions 60
Figure 10: Suggested MTS 4 Site Layout 61
Figure 11: Expansion Cabinet Dimensions 62
Figure 12: Suggested Expansion Cabinet Site Layout 63
Figure 13: Opto-isolated Alarm Input Structure 73
Figure 14: Lifting Point for MTS 4 and Expansion Cabinet 78
Figure 15: Placing the MTS 4 and the Expansion Cabinet in the Vertical or Horizontal Position 79
Figure 16: MTS – Mounting Brackets 80
Figure 17: MTS LiTE / MTS 2 – Drill Hole Position for the Mounting Brackets 81
Figure 18: MTS 4 and Expansion Cabinet – Drill Hole Position for the Mounting Brackets 81
Figure 19: MTS – Mounting Brackets and the Cabinet 82
Figure 20: MTS Mounting Plate 83
Figure 21: MTS LiTE/MTS 2 – Drill Hole Position for the Mounting Plate 84
Figure 22: MTS 4 – Drill Hole Position for the Mounting Plate 84
Figure 23: Position of Security Screws 85
Figure 24: MTS – Wall Fixing 85
Figure 25: Station Ground Point on the MTS LiTE Junction Panel 87
Figure 26: Station Ground Point on the MTS 2 Junction Panel 87
Figure 27: Station Ground Point on the MTS 4 Junction Panel 87
Figure 28: Station Ground Point on the Expansion Cabinet Junction Panel 88
Figure 29: Cabinet Grounding 88
Figure 30: -48 VDC Connection on the MTS LiTE Junction Panel 90
Figure 31: -48 VDC Connection on the MTS 2 Junction Panel 90
Figure 32: -48 VDC Connections on the MTS 4 Junction Panel 90
Figure 33: -48 VDC Connections on the Expansion Cabinet Junction Panel 91
Figure 34: DC Plug MTS LiTE/MTS 2 (Motorola P/N 3166501A01) – Blue/Black Wires 92
Figure 35: DC Plug MTS LiTE/MTS 2 (Motorola P/N 3166501A01) – Red/Black Wires 92
Figure 36: DC Plug MTS 4 (Motorola P/N 3166501A02) – Blue/Black Wires 92
Figure 37: DC Plug MTS 4 (Motorola P/N 3166501A02) – Red/Black Wires 93
Figure 38: 100–240 VAC Connection on the MTS LiTE Junction Panel 94
Figure 39: 100–240 VAC Connection on the MTS 2 Junction Panel 94
Figure 40: 100–240 VAC Connections on the MTS 4 Junction Panel 94
Figure 41: 100–240 VAC Connections on the Expansion Cabinet Junction Panel 95
Figure 42: AC Socket (IEC Connector) 95
Figure 43: Backup Battery Sensor Connection on MTS LiTE Junction Panel 96
Figure 44: Backup Battery Sensor Connection on MTS 2 Junction Panel 96
Figure 45: Backup Battery Sensor Connections on MTS 4 Junction Panel 97
Figure 46: Backup Battery Sensor Connections on Expansion Cabinet Junction Panel 97
Figure 47: Backup Battery Temperature Sensor Cable 98
Figure 48: MTS LVD Kit Relay Connection Diagram – Single PSU 99

Figure 49: MTS LVD Kit Relay Connection Diagram – Dual PSU, Dual Batteries 99
Figure 50: MTS LVD Kit Relay Connection Diagram – Dual PSU, Single Battery 100
Figure 51: MTS LVD Kit Battery Cable Connections 101
Figure 52: MTS LVD Kit Plus and Minus Signs 101
Figure 53: MTS LVD Kit Backplate Plugs 101
Figure 54: Mounting the MTS LVD Kit 102
Figure 55: Base Radio Antenna Connections – MTS LiTE 103
Figure 56: Base Radio Antenna Connections – MTS 2 103
Figure 57: Base Radio Antenna Connections – MTS 2 Non Duplexed 104
Figure 58: Base Radio Antenna Connections – MTS 4 104
Figure 59: Connection Between MTS 4 Prime Cabinet and MTS 4 Expansion Cabinet – Phasing Harness 106
Figure 60: Connections Between MTS 4 Prime Cabinet and MTS 4 Expansion Cabinet – Two Filters 107
Figure 61: Connections Between Site Controller and XHUB Controller 108
Figure 62: Power Connection to the XHUB Controllers 109
Figure 63: RX Connection Between MTS 4 Prime Cabinet and MTS4 Expansion Cabinet 110
Figure 64: Holes in Top Lid for Rx Cables 110
Figure 65: Remote GPS Receiver Connection on MTS LiTE Junction Panel 113
Figure 66: Remote GPS Receiver Connection on MTS 2 Junction Panel 114
Figure 67: Remote GPS Receiver Connection on MTS 4 Junction Panel 114
Figure 68: RGPS Modular Data Surge Protector 115
Figure 69: Deutsch Connector Pin-outs and Color Code 116
Figure 70: RGPS Connector Pinout 116
Figure 71: GPS Antenna Connection on MTS LiTE Junction Panel 117
Figure 72: GPS Antenna Connection on MTS 2 Junction Panel 117
Figure 73: GPS Antenna Connection on MTS 4 Junction Panel 118
Figure 74: E1/X.21 and Ethernet Site Link Connectors on the MTS LiTE Junction Panel 119
Figure 75: E1/X.21 and Ethernet Site Link Connectors on the MTS 2 Junction Panel 119
Figure 76: E1/X.21 and Ethernet Site Link Connectors on the MTS 4 Junction Panel 119
Figure 77: Site Link Connector E1 Pinout 120
Figure 78: Site Link Connector X.21 Pinout 120
Figure 79: MTS 2 Junction Panel E1/X.21 and Ethernet Site Link Connectors 121
Figure 80: MTS 4 Junction Panel E1/X.21 and Ethernet Site Link Connectors 122
Figure 81: MTS LiTE Junction Panel Alarm Wiring Connection 125
Figure 82: MTS 2 Junction Panel Alarm Wiring Connection 125
Figure 83: MTS 4 Junction Panel Alarm Wiring Connection 125
Figure 84: External Alarm Connector Pinout 126
Figure 85: MTS LiTE Screws Positions 131
Figure 86: MTS 2 Screws Positions 132
Figure 87: MTS 4 Screws Positions 133
Figure 88: Expansion Cabinet Screw Positions 134
Figure 89: AC/DC Power Cabling Diagram for MTS LiTE 136
Figure 90: AC/DC Power Cabling Diagram for MTS 2 137
Figure 91: AC/DC Power Cabling Diagram for MTS 4 139
Figure 92: AC/DC Power Cabling Diagram for Expansion Cabinet 141
Figure 93: User Alarms/Controls, X.21, RGPS, and GPS Cabling Diagram for MTS LiTE 143
Figure 94: User Alarms/Controls, X.21, RGPS, and GPS Cabling Diagram for MTS 2 144
Figure 95: User Alarms/Controls, X.21, RGPS and GPS Cabling Diagram for MTS 4 146
Figure 96: E1 and Ethernet Cabling Diagram for MTS LiTE 147
Figure 97: E1 and Ethernet Cabling Diagram for MTS 2 148
Figure 98: E1 and Ethernet Cabling Diagram for MTS 4 150
Figure 99: E1 and Ethernet Cabling for MTS 4 with Expansion Cabinet (to the Right) 152
Figure 100: Ethernet Site Link Cabling for MTS LiTE 153

Figure 101: Ethernet Site Link Cabling for MTS 2 154
Figure 102: Ethernet Site Link Cabling for MTS 4 with Single Site Controller 156
Figure 103: Ethernet Site Link Cabling for MTS 4 with Dual Site Controller 158
Figure 104: Ethernet Site Link Cabling for MTS 4 Expansion Cabinet with Single Site Controller 160
Figure 105: Ethernet Site Link Cabling for MTS 4 Expansion Cabinet with Dual Site Controller 162
Figure 106: RF Cabling/Connections for MTS LiTE with One TX and One RX ant. No Diversity 163
Figure 107: RF Cabling/Connections for MTS LiTE with One TX/RX ant. 164
Figure 108: RF Cabling/Connections for MTS LiTE with One TX/RX ant. and One Additional RX ant. 165
Figure 109: RF Cabling Diagram for MTS 2 with No Diversity 166
Figure 110: RF Cabling/Connections for MTS 2 with One TX ant. and up to Two Additional RX ant. 168
Figure 111: RF Cabling Diagram for MTS 2 with One TX/RX ant. and Up to Two Additional RX ant. 170
Figure 112: RF Cabling Diagram for MTS 2 with Two TX/RX ant. and Up to One Additional RX ant. 171
Figure 113: RF Cabling Diagram for MTS 4 with No Diversity 173
Figure 114: RF Cabling/Connections for MTS 4 with one TX/RX ant. and Up to Two Additional RX ant. 175
Figure 115: RF Cabling/Connections for MTS 4 with Two TX/RX ant. and Up to One Additional RX ant. 177
Figure 116: RF Cabling/Connections for MTS 4 with One TX ant. and Up to Three Additional RX ant. 179
Figure 117: Holes in Top Lid for Rx Cables 181
Figure 118: RF Cabling/Connections for Expansion Cabinet with One TX/RX ant. and Up to Two Additional RX ant. 183
Figure 119: RF Cabling/Connections for Expansion Cabinet with Two TX/RX ant. and Up to One Additional RX ant. 186
Figure 120: RF Cabling/Connections for Expansion Cabinet with One TX ant. and Up to Three Additional RX ant. 189
Figure 121: RF Cabling/Connections for Expansion Cabinet with Two TX Antennas and up to Three Additional RX ant. 192
Figure 122: CAN Bus Cabling Diagram for MTS LiTE 193
Figure 123: CAN Bus Cabling Diagram for MTS 2 with TX/RX on 1 ant. RX on 2 ant. 194
Figure 124: CAN Bus Cabling Diagram for MTS 2 with TX/RX on 2 ant. RX on 1ant. 195
Figure 125: CAN Bus Cabling Diagram for MTS 4 with TX/RX or TX on 1 ant. 197
Figure 126: CAN Bus Cabling Diagram for MTS 4 with TX/RX or TX on 2 ant. with ATCCs 199
Figure 127: CAN Bus Cabling Diagram for MTS4 and Expansion Cabinet with ATCCs 201
Figure 128: CAN Bus Cabling Diagram for MTS4 and Expansion Cabinet with MTCCs and Redundant Site Controller 202
Figure 129: Basic Service Cable 207
Figure 130: Service Connector Box 208
Figure 131: Service Connector Box Pinout 208
Figure 132: BRC Indicators 215
Figure 133: Base Radios Cabinet Positions and Numbering 216
Figure 134: Spectrum Analyzer Display of Transmitted Signal 227
Figure 135: MTS LiTE TX/RX on 1 ant. - Filter Configuration 232
Figure 136: MTS LiTE TX/RX on 1 ant., RX on 1 ant - Filter Configuration 232
Figure 137: MTS 2 TX/RX on 2 ant. - Filter Configuration 233
Figure 138: MTS 2 TX/RX on 2 ant., RX on 1 ant - Filter Configuration 233
Figure 139: MTS 2 TX/RX on 1 ant., RX on 1 ant - Filter Configuration 234
Figure 140: MTS 2 TX/RX on 1 ant., RX on 2 ant - Filter Configuration 234
Figure 141: MTS LiTE / MTS 2 Preselector 235
Figure 142: Schematic Diagram of MTS LiTE / MTS 2 Preselector 236
Figure 143: MTS 2 Duplexer 238
Figure 144: Schematic Diagram of MTS LiTE / MTS 2 Duplexer 239
Figure 145: Hybrid Combiner 241
Figure 146: MTS 4 TX/RX on one Antenna and up to two RX Antennas Filter Configuration 243
Figure 147: MTS 4 TX/RX on two Antennas and up to one RX Antenna Filter Configuration 244

Figure 148: MTS 4 TX on one Antenna and up to three RX Antennas Filter Configuration 244
Figure 149: MTS 4 TX on one Antenna and two RX Antennas Filter Configuration 244
Figure 150: MTS 4 TX on one Antenna and three RX Antennas Filter Configuration 244
Figure 151: MTS 4 Preselector 245
Figure 152: Schematic Diagram of MTS 4 Preselector 246
Figure 153: MTS 4 Duplexer 248
Figure 154: Schematic Diagram of MTS 4 Duplexer 248
Figure 155: Post Filter 251
Figure 156: Schematic Diagram of Post Filter 251
Figure 157: Auto Tune Cavity Combiner 253
Figure 158: Expansion Cabinet with Single Diversity 259
Figure 159: Expansion Cabinet with Dual Diversity 259
Figure 160: Expansion Cabinet with Triple Diversity 260
Figure 161: Expansion Cabinet RX Splitter 260
Figure 162: Schematic Diagram of RX Splitter 261
Figure 163: Site Controller Front View 263
Figure 164: Site Controller Rear View 264
Figure 165: Site Controller - Functional Block Diagram 265
Figure 166: Site Controller - Front Panel 266
Figure 167: Site Controller - Front Panel LEDs Position 267
Figure 168: Site Controller Rear Panel 271
Figure 169: Site Controller - CAN Bus 272
Figure 170: Site Controller - Captive Screws 277
Figure 171: Site Controller - Lithium Battery Location 277
Figure 172: XHUB Controller 279
Figure 173: XHUB Controller – Functional Block Diagram 281
Figure 174: XHUB Controller- Front Panel 282
Figure 175: Base Radio 287
Figure 176: Base Radio Front Panel 288
Figure 177: Base Radio – Functional Block Diagram 289
Figure 178: Low-power PA Functional Block Diagram 291
Figure 179: High-power PA Functional Block Diagram 291
Figure 180: Power Supply Unit Front Panel 295
Figure 181: PSU Front Panel 299
Figure 182: MTS Fan Kit 305
Figure 183: MTS LiTE Airflow 307
Figure 184: MTS 2 Airflow 308
Figure 185: MTS 4 Airflow 309
Figure 186: Site Controller LEDs 314
Figure 187: Troubleshooting Flow Chart 315
Figure 188: Procedure 1 Troubleshooting Flowchart 352
Figure 189: Procedure 2 Troubleshooting Flowchart 353
Figure 190: Base Radio LEDs 354
Figure 191: RF Cabling Diagram for MTS 2 with one TX/RX ant. and up to two additional RX ant. before Expansion 374
Figure 192: E1 and Ethernet Cabling Diagram for MTS 2 before Expansion 375
Figure 193: RF Cabling Diagram for MTS 2 with one TX/RX ant. and up to two RX ant. after Expansion 376
Figure 194: E1 and Ethernet Cabling Diagram for MTS 2 after Expansion 377
Figure 195: RF Cabling of MTS 4 with one TX ant. Before Expansion 382
Figure 196: RF Cabling of MTS 4 with two TX ant. Before Expansion 383
Figure 197: E1 and Ethernet Connections of MTS 4 Before Expansion 384
Figure 198: RF Cabling Diagram of MTS 4 with One TX ant. After Expansion 385

Figure 199: RF Cabling Diagram of MTS 4 with two TX ant. After Expansion 386
Figure 200: E1 and Ethernet Cabling of MTS 4 After Expansion 387
Figure 201: ATCC Cabling Diagram — MTS 4 with 1 TX Antenna before Expansion 395
Figure 202: ATCC Cabling Diagram — MTS 4 with 1 TX Antenna after Expansion 396
Figure 203: M4 Screw Position 399
Figure 204: M3 Screw position 400
Figure 205: Position of Modules in MTS LiTE Cabinet 406
Figure 206: Position of Modules in MTS 2 Cabinet 409
Figure 207: Position of Modules in MTS 4 cabinet 414
Figure 208: Position of Modules in Expansion Cabinet 415
Figure 209: MTS LiTE ESD Strap Connection 420
Figure 210: MTS 2 and MTS 4 ESD Strap Connection 421

List of Tables

Table 1: List of Telephone Numbers 7
Table 2: Preselector Filter Bandwidth 48
Table 3: Duplexer Filter Bandwidth 48
Table 4: Hybrid Combiner — Frequency Range 49
Table 5: Typical Power Loads and Heat Dissipation Values – MTS 400 MHz Configurations 66
Table 6: Typical Power Loads and Heat Dissipation Values – Expansion Cabinet 400 MHz Configuration 68
Table 7: Typical Power Loads and Heat Dissipation Values – MTS 260 MHz Configurations 69
Table 8: Typical Power Loads and Heat Dissipation Values – Expansion Cabinet 260 MHz Configuration 70
Table 9: Typical Power Loads and Heat Dissipation Values – MTS 800 MHz / 900 MHz Configuration 70
Table 10: Typical Power Loads and Heat Dissipation Values – Expansion Cabinet 800 MHz Configuration 71
Table 11: Antenna Connections 105
Table 12: GPS Start-up Time 113
Table 13: RGPS Cables 115
Table 14: RGPS Connector 116
Table 15: Site Link Connector E1 on Junction Panel 120
Table 16: Site Link Connector X.21 on Junction Panel 120
Table 17: Junction Panel Ethernet Site Link Connector Pins 122
Table 18: External Alarm Connector 126
Table 19: Recommended Installation Tools 128
Table 20: Recommended Installation Test Equipment 128
Table 21: Recommended Installation Parts 129
Table 22: Recommended RF Connectors, Screws, and Nuts Torque 130
Table 23: MTS LiTE, MTS 2, and MTS 4 and Expansion Cabinets Mounting Screws 130
Table 24: AC/DC Power Cabling for MTS LiTE 135
Table 25: AC/DC Power Cabling for MTS 2 136
Table 26: AC/DC Power Cabling for MTS 4 137
Table 27: AC/DC Power Cabling for Expansion Cabinet 140
Table 28: User Alarms/Controls, X.21, RGPS, and GPS Cabling for MTS LiTE 142
Table 29: User Alarms/Controls, X.21, RGPS, and GPS Cabling for MTS 2 143
Table 30: User Alarms/Controls, X.21, RGPS, and GPS Cabling for MTS 4 144
Table 31: E1 and Ethernet Cabling for MTS LiTE 147
Table 32: E1 and Ethernet Cabling for MTS 2 148
Table 33: E1 and Ethernet Cabling for MTS 4 149
Table 34: E1 and Ethernet Cabling for Expansion Cabinet 151
Table 35: Ethernet Site Link Cabling for MTS LiTE 153
Table 36: Ethernet Site Link Cabling for MTS 2 153
Table 37: Ethernet Site Link Cabling for MTS 4 with Single Site Controller 154
Table 38: Ethernet Site Link Cabling for MTS 4 with Dual Site Controller 157
Table 39: Ethernet Site Link Cabling for MTS 4 Expansion Cabinet with Single Site Controller 159
Table 40: Ethernet Site Link Cabling for MTS 4 Expansion Cabinet with Dual Site Controller 160
Table 41: RF Cabling/Connections for MTS LiTE with One TX and One RX ant. No Diversity 162
Table 42: RF Cabling/Connections for MTS LiTE with One TX/RX ant. 163
Table 43: RF Cabling/Connections for MTS LiTE with One TX/RX ant. and One Additional RX ant. 164
Table 44: RF Cabling/Connections for MTS 2 with no diversity 165
Table 45: RF Cabling/Connections for MTS 2 with One TX ant. and up to Two Additional RX ant. 166
Table 46: RF Cabling/Connections for MTS 2 with One TX/RX ant. and up to Two Additional RX ant. 168
Table 47: RF Cabling/Connections for MTS 2 with Two TX/RX ant. and Up to One Additional RX ant. 170
Table 48: RF Cabling/Connections for MTS 4 with No Diversity 172

Table 49: TX ATCC Interconnect Harness Part Numbers 172
Table 50: RF Cabling for MTS 4 with One TX/RX Antenna and Up to Two Additional RX Antennas 174
Table 51: RF Cabling/Connections for MTS 4 with Two TX/RX ant. and Up to One Additional RX ant. 176
Table 52: RF Cabling/Connections for MTS 4 with One TX ant. and Up to Three Additional RX ant. 178
Table 53: RF Cabling/Connections for Expansion Cabinet with One TX/RX ant. and Up to Two Additional RX ant. 180
Table 54: TX ATCC Phasing Harness Part Numbers 181
Table 55: RF Cabling/Connections for Expansion Cabinet with Two TX/RX ant. and Up to One Additional RX ant. 184
Table 56: RF Cabling/Connections for Expansion Cabinet with One TX ant. and Up to Three Additional RX ant. . 187
Table 57: RF Cabling/Connections for Expansion Cabinet with Two TX ant. and Up to Three Additional RX ant. .190
Table 58: CAN Bus Cabling for MTS LiTE 193
Table 59: CAN Bus Cabling for MTS 2 with TX/RX on 1 ant. RX on 2 ant. 194
Table 60: CAN Bus Cabling for MTS 2 with TX/RX on 1 ant. RX on 2 ant. 195
Table 61: CAN Bus Cabling for MTS 4 with TX/RX or TX on 1 ant. 196
Table 62: CAN Bus Cabling for MTS 4 with TX/RX or TX on 2 ant. with ATCCs 197
Table 63: CAN Bus Cabling for MTS 4 with Expansion Cabinet 200
Table 64: Equipment for Cabinet Testing 206
Table 65: Basic Service Cable Pinout 207
Table 66: Site Controller Service Port Pinout 208
Table 67: Base Radio LEDs: Normal Startup Sequence 214
Table 68: Base Radio LEDs: Hardware Failure 214
Table 69: Corrective Actions for Missing or Bad Base Radio Parameters 218
Table 70: Transmitter Verification Specifications 221
Table 71: MTS LiTE RF Configurations 231
Table 72: MTS 2 RF Configurations 232
Table 73: MTS 4 RF Configurations 243
Table 74: MTS 4 Expansion Cabinet RF Configurations 258
Table 75: Site Controller - Front Panel Indicators (LED) 267
Table 76: Site Controller - Front Panel Switches 269
Table 77: Site Controller - Front Panel Connectors 270
Table 78: Site Controller - Service Cable Pinouts 270
Table 79: Site Controller - Rear Panel Connectors 271
Table 80: Site Controller - CAN Bus Functionality 272
Table 81: XHUB Controller – Front Panel Indicators (LED) 282
Table 82: XHUB Controller – Front Panel Switches 284
Table 83: XHUB Controller – Front Panel Connectors 284
Table 84: XHUB Controller – Rear Panel Connectors 284
Table 85: XHUB Controller - FRU 285
Table 86: Base Radio – LED Indicators 291
Table 87: Base Radio – Connectors 292
Table 88: Base Radio – Service Cable Pinouts 293
Table 89: Power Supply Unit LED Indicators 299
Table 90: Power Supply Unit Controls 301
Table 91: Power Supply Unit Connectors 301
Table 92: Site Controller LED Fault Indications 311
Table 93: Site Reference States – status sc 316
Table 94: Site Reference Reasons 316
Table 95: Site Reference States – status bts 317
Table 96: BRC Config File Troubleshooting 318
Table 97: Other Site Controller Symptoms 333
Table 98: Generic Base Radio Alarms 333

Table 99: Recommended Test Equipment 351
Table 100: Base Radio Fault Indications 354
Table 101: Miscellaneous Troubleshooting Items 355
Table 102: Environmental Specifications 357
Table 103: MTS Standards Specifications 358
Table 104: 359
Table 105: Dimensions of the MTS 2, MTS 4, and MTS 4 Expansion Cabinets 359
Table 106: RF Specifications 360
Table 107: Auto Tune and Manual Tune Cavity Combining Transmitter-to-Antenna Port Specifications 361
Table 108: Hybrid Combining Transmitter-to-Antenna Port Specifications 361
Table 109: Transmit Specifications – TETRA 362
Table 110: Transmit Specifications – TEDS 363
Table 111: Receiver Specifications – TETRA 364
Table 112: Receiver Specifications – TEDS 365
Table 113: Site Controller Performance Specifications 366
Table 114: Internal GPS Input Specifications 366
Table 115: MTS LiTE / MTS 2 Duplexer Specifications 366
Table 116: MTS LiTE / MTS 2 Preselector Specifications 366
Table 117: MTS 4 Duplexer Specifications 367
Table 118: MTS 4 Post Filter Specifications 367
Table 119: MTS 4 Preselector Specifications 367
Table 120: Auto Tune Cavity Combiner (ATCC) Specifications 368
Table 121: Manual Tune Cavity Combiner (MTCC) Specifications 368
Table 122: Hybrid Combiner Specifications 368
Table 123: Base Radio Specifications 369
Table 124: Power Supply Specifications 369
Table 125: XHUB Controller Specifications 370
Table 126: MTS 4 Expansion Cabinet RX Splitter Specifications 370
Table 127: MTS LiTE/MTS 2 Connectors 371
Table 128: MTS 4 Connectors 371
Table 129: Available FRUs for MTS LiTE 405
Table 130: Other FRUs for MTS LiTE Available from After Market Operations (AMO) 405
Table 131: Available FRUs for MTS 2 407
Table 132: Other FRUs for MTS 2 Available from After Market Operations (AMO) 407
Table 133: Available FRUs for MTS 4 410
Table 134: Other Field Replaceable Units for MTS 4 Available from After Market Operations (AMO) 410
Table 135: Available Field Replaceable Units for MTS 4 Expansion Cabinet 413
Table 136: Other Field Replaceable Units for MTS 4 Expansion Cabinet Available from After Market Operations (AMO) 413
Table 137: Required Planned Maintenance Inspection Actions 417
Table 138: TETRA/Dimetra Acronyms 423

List of Processes

Installation Prerequisites 76
Installing the Cabinet Using the Mounting Plate 82
Performing a Final Check-Out after Installation 127
Preparing for Configuration and Testing 203
Configuring and Verifying the Site Controller 211
Configuring and Verifying the Base Radio 213
Replacing the MTS LiTE / MTS 2 Preselector 236
Replacing the MTS LiTE / MTS 2 Duplexer 239
Replacing the Hybrid Combiner 241
Replacing the MTS 4 Preselector 246
Replacing the MTS 4 Duplexer 249
Replacing the Post Filter 251
Replacing the Cavity Combiner 254
Replacing the Expansion Cabinet RX Splitter 261
Replacing the Base Radio 293
Restoring the Base Radio 294
Replacing the Power Supply Unit (PSU) 302
Adding an Additional Base Radio to MTS 2 377
Adding a Redundant Site Controller 390
Configuring Redundant Site Controller 392
Adding the Four-Channel Cavity Combiner 396
Expanding from MTS 2 to MTS 4 398

List of Procedures

Receiving the MTS Equipment 75
Moving the MTS 4 and Expansion Cabinet 77
Installing the Cabinet Using the Mounting Brackets 80
Installing the Mounting Plate 83
Securing Cabinet to a Mounting Plate 84
Grounding the Equipment Cabinet 88
Checking Grounding Connections 89
Connecting -48 VDC Power Source to the Equipment Cabinet 91
Connecting 100–240 VAC Power Source to Equipment Cabinet 95
Connecting the Backup Battery Sensor to the Equipment Cabinet 97
Installing the MTS LVD Kit 100
Connecting Ethernet Site Link Retrofit Kit for MTS 2 (old JP) 123
Connecting Ethernet Site Link Retrofit Kit for MTS 2 (new JP) 123
Connecting Ethernet Site Link Retrofit Kit for MTS 4 123
Connecting Ethernet Site Link Retrofit Kit for MTS 4 with Expansion Cabinet (old JP) 124
Connecting Ethernet Site Link Retrofit Kit for MTS 4 with Expansion Cabinet (new JP) 124
Checking the Cabinet after Setup 127
Powering Up the MTS 127
Logging on to the Site Controller Application through Serial Connection 204
Logging on to the Base Radio Application through Serial Connection 204
Logging on to the BOOT1 mode 205
Logging on to the Test Application 205
Setting Up Service Terminal 209
Setting Up the Site Controller 212
Setting and Accessing Base Radio Position Using Test Application 216
Setting and Accessing Base Radio Position Using Boot1 217
Setting Base Radio IP 217
Configuring the Base Radio Receiver 217
Configuring the pm_config 219
Configuring the Base Radio VSWR 220
Verifying the Base Radio Software Revision 220
Upgrading the Base Radio Test Application Software (Optional) 220
Verifying the Transmitter 221
Setting Up the Equipment for Receiver Verification 223
Verifying the Receiver 223
Verifying and Tuning the Receiver RSSI Levels 224
Displaying Base Radio Alarms 226
Viewing the Transmit Spectrum (Optional) 227
Synchronizing Non-Volatile Memory (NVM) Regions 227
Removing the Preselector – MTS LiTE 236
Removing the Preselector – MTS 2 237
Reinstalling the Preselector – MTS LiTE 237
Reinstalling the Preselector – MTS 2 237
Removing the MTS LiTE / MTS 2 Duplexer 239
Reinstalling the MTS LiTE / MTS 2 Duplexer 240
Inserting the MTS LiTE / MTS 2 Duplexer into the Filter Tray 240
Updating the Mapping List with the New Unit TrackID 240
Removing the Hybrid Combiner 241

Reinstalling the Hybrid Combiner 242
Removing the MTS 4 Preselector 246
Reinstalling the MTS 4 Preselector 247
Removing the MTS 4 Duplexer 249
Reinstalling the MTS 4 Duplexer 249
Inserting the MTS 4 Duplexer into the Cabinet 249
Updating the Mapping List with the New Unit TrackID 249
Removing the Post Filter 252
Reinstalling the Post Filter 252
Inserting the Post Filter into the Cabinet 252
Updating the Mapping List with the New Unit TrackID 252
Removing the Cavity Combiner 254
Reinstalling the Cavity Combiner 255
Inserting the Cavity Combiner into the Cabinet 255
Upgrading the Redundant ATCC Firmware 255
Updating the Mapping List with the New TrackID 256
Tuning the MTCC in a BTS in Tetra Application Mode 256
Removing the RX Splitter 261
Reinstalling the RX Splitter 261
Updating CAN Bus TrackID Mapping List 274
Resetting the RTC Battery Status 275
Checking if the Site Controller Lithium Battery Needs Changing 276
Replacing the Site Controller Lithium Battery 276
Replacing the XHUB Controller 285
Removing the Base Radio 294
Reinstalling the Base Radio 294
Removing the Power Supply Unit (PSU) 302
Installing the Power Supply Unit (PSU) 302
Updating the Mapping List with the New PSU TrackID 303
Replacing the Cooling Fans 309
Verifying Encryption Capability 332
Installing an Additional Base Radio to MTS 2 378
Installing the Hybrid Combiner 379
Adding an Additional Module Cage to MTS 4 380
Adding an Additional Base Radio to MTS 4 388
Installing a Second Site Controller 391
Performing Site Controller Hardware Pre-Checks 392
Configuring Site Controller Configuration Files 393
Configuring Ethernet Ports 393
Configuring Site Controller IDs 394
Installing the Cavity Combiner into the Cabinet 397
Installing an additional Hybrid Combiner 398
Extracting the Module Cage from MTS 2 398
Assembling the Module Cage in the MTS 4 Cabinet 400
Adding a Redundant XHUB Controller 401

About MTS LiTE, MTS 2 and MTS 4 Installation, Configuration and Basic Service Manual

This manual provides an overview of the Motorola TETRA Station (MTS) within the Dimetra IP System.

What Is Covered In This Manual?

This manual covers the basics of Installation, Configuration, and Service of the following TETRA stations:

- MTS LiTE 400 MHz and 800 MHz
- MTS 2 260 MHz, 400 MHz, and 800 MHz
- MTS 4 260 MHz, 400 MHz, and 800 MHz

Note: This manual refers to the following MTS frequencies:

- **260 MHz:** covers the 260 MHz - 275 MHz frequency range
- **400 MHz:** covers the 350 MHz - 470 MHz frequency ranges
- **800 MHz:** covers the 806 MHz - 870 MHz frequency range

Helpful Background Information

This manual is intended for use by the following audiences within the user community:

- Operations Group - This group is responsible for the day-to-day system operation and comprises system administrators and communication specialists, usually under the supervision of an operations manager.
- Field Technicians / Engineers - Responsible for installation, configuration, support of customer systems, and FRU replacement.

It is assumed that the reader is familiar with the operating principles of Motorola Dimetra IP trunked radio equipment or similar.

Related Information

Document Title	Description
Glossary	The glossary provides a list of abbreviations, acronyms, and terms used in the Dimetra IP system documentation.
Standards and Guidelines for Communication Sites	This manual provides standards and guidelines to follow when setting up a Motorola communications site. Also known as R56 manual.
System Overview	This manual provides basic radio system concepts, call processing basics, and an introduction to the various components and processes associated with the Dimetra IP system. The manual provides the background needed to comprehend the theory of operation and it provides equipment/subsystem functional descrip-

Table continued…

Document Title	Description
	tions. It also describes the role of the numerous network management software applications used for managing the system
Ethernet Site Links	This manual contains information on the Ethernet Site Links (ESL) feature, which provides a means to establish Ethernet connections of the following type: • Base station links (single and redundant) • Inter-zone links • Remote control site links terminated at non-redundant control site routers
Link Encryption	This manual describes the technical solution for setting up Encryption and Authentication, which is an extension to the Ethernet Site Links (ESL) feature, on Routers and Base Stations.
MTS Man Machine Interface (MMI) Commands	This manual describes the Man-Machine Interface commands used to test and configure MTS sites.
TESS Software User Guide	This manual is an introduction and guide to the use of the Dimetra BTS (Base Transceiver System) Service Software. Through the Dimetra BTS Service Software trained service personnel and systems engineers can configure and program a BTS.
Backup and Restore Including FRU/FRE volumeMTS Lite, MTS 2, and MTS 4 Restoration	This volume contains the system backup and restoration procedures and their impact on the services as well as pre and post-restoration checks. The volume also describes how to perform FRU/FRE procedures.

Icon Conventions

The documentation set is designed to give the reader more visual clues. The following graphic icons are used throughout the documentation set. These icons and their associated meanings are described below.

Danger: The signal word DANGER with the associated safety icon indicates information that, if disregarded, will result in death or serious injury.

Warning: The signal word WARNING with the associated safety icon indicates information that, if disregarded, could result in death or serious injury, or serious product damage.

Caution: The signal word CAUTION with the associated safety icon indicates information that, if disregarded, may result in minor or moderate injury, or serious product damage.

Caution: The signal word CAUTION may be used without the safety icon to state potential damage or injury that is not related to the product.

Important: IMPORTANT statements contain information that is crucial to the discussion at hand, but is not CAUTION or WARNING. There is no warning level associated with the IMPORTANT statement.

Note: NOTE contains information more important than the surrounding text, such as exceptions or preconditions. They also refer the reader elsewhere for additional information, remind the reader how to complete an action (when it is not part of the current procedure, for instance), or tell the reader where something is located on the screen. There is no warning level associated with a note.

Suggestion: SUGGESTION indicates a recommendation or tip from Motorola that does not require to be followed, but might be helpful. There is no warning level associated with SUGGESTION.

Style Conventions

The following style conventions are used:

Convention	Description
Bold	This typeface is used for names of, for instance, windows, buttons, and labels when these names appear on the screen (example: the **Alarms Browser** window). When it is clear that we are referring to, for instance, a button, the name is used alone (example: Click **OK**).
`Monospacing font in bold`	This typeface is used for words to be typed in exactly as they are shown in the text (example: In the **Address** field, type `http://ucs01.ucs:9080/`).
`Monospacing font`	This typeface is used for messages, prompts, and other text displayed on the computer screen (example: `A new trap destination has been added`).
<Monospacing font in bold Italic>	This typeface is used with angle brackets for words to be substituted by a specific member of the group that the words represent (example: ***<router number>***). **Note:** In sequences to be typed in, the angle brackets are omitted to avoid confusion as to whether the angle brackets are to be included in the text to be typed.
CAPITAL LETTERS	This typeface is used for keyboard keys (example: Press Y, and then press ENTER).
Italic	This typeface is used for citations. This can be the name of a document or a phrase from another document (example: *Dimetra IP System Overview*).
→	An → (arrow pointing right) is used for indicating the menu or tab structure in instructions on how to select a certain menu item (example: **File** → **Save**) or a certain sub-tab.

Regulatory CE Marking Compliance

MTS LiTE, MTS 2 and MTS 4 are compliant with the essential requirements in article 3 of the E.U. Directive, 1999/5/EC, “Radio Equipment and Telecommunications Terminal Equipment and the Mutual Recognition of their Conformity (RTTE)”. This includes:

Article 3.1a: Safety, of the RTTE directive: Verification tests performed according to the harmonized European standard:

- EN 60950-1 Safety of information technology equipment; Part 1: General requirements.

Article 3.1b: EMC, of the RTTE directive: Verification tests performed according to the harmonized European standards:

- ETSI EN 301 489-1 EMC standard for radio equipment and services; Part 1: Common technical requirements.
- ETSI EN 301 489-18 EMC standard for radio equipment and services; Part 18: Specific conditions for Terrestrial Trunked Radio (TETRA) equipment.
- EN 61000-3-2 standard for Electromagnetic compatibility (EMC) -- Part 3-2: Limits - Limits for harmonic current emissions (equipment input current up to and including 16 A per phase)
- EN 61000-3-3 standard for Electromagnetic compatibility (EMC) -- Part 3-3 Limits - Limitation of voltage changes, voltage fluctuations, and flicker in public low-voltage supply systems, for equipment with rated current =16 A per phase and not in subject to conditional connection.

Note: This is a Class A product. In a domestic environment, this product may cause radio interference in which case you may be required to take adequate measures.

Article 3.2: Radio spectrum use, of the RTTE directive: Verification tests performed according to the harmonized European standards:

- ETSI EN 303 035-1 Harmonized EN for TETRA equipment covering essential requirements under article 3.2 of the RTTE directive; Part 1: Voice plus Data (V+D)
- ETSI EN 300 394-1 TETRA conformance testing specification; Part 1: Radio.
- ETSI EN 302 561 Radio equipment using constant or non-constant envelope modulation operating in a channel bandwidth of 25 kHz, 50 kHz, 100 kHz, or 150 kHz; Harmonized EN covering essential requirements of article 3.2 of the RTTE Directive.

MTS 2 and MTS 4 are also compliant with the following requirement:

- ARIB STD-T80 Digital Mobile Telecommunication System for Local Government TYPE 2

Chapter 1

MTS Overview

Motorola TETRA Station (MTS) is a Base Station of a Dimetra IP communication system. A Base Station serves as the Radio Frequency (RF) interface between the system infrastructure and the mobile stations. Base Stations in a trunked system have three primary interfaces:

- Receiver to pick up the RF signal from the mobile stations
- Transmitter to send RF signals to the mobile stations
- Wired interface to send audio and control traffic to the system infrastructure

Strategically placed base stations allow users to communicate with other mobile stations, dispatch operators, or telephone users using the Dimetra IP system.

MTS Platform Description

The MTS provides the interface between the mobile stations within the Dimetra IP system and the rest of the system infrastructure. The MTS performs the following functions:

- Radio link formatting, coding, timing, framing, and error control
- Timing control supervision to mobile stations (Timing Advance)
- Radio link quality measurements (Signal Quality Estimate)
- Site to site frame synchronization
- Interface translation
- Switching functions between multiple base transceivers (radio carriers)
- Air Interface Encryption
- Local Site Trunking
- Operation, maintenance, and administration agent

There are three different versions of MTS:

- MTS LiTE – available in 400 MHz and 800 MHz versions.
- MTS 2 – available in 260 MHz, 400 MHz, 800 MHz and 900 MHz versions.
- MTS 4 – available in 260 MHz, 400 MHz, and 800 MHz versions.

MTS LiTE is the smallest of the three versions and supports one Base Radio. MTS 2 is the middle size version of the MTSs and supports from one to two Base Radios. MTS 4 is the largest of the three versions and supports from one to four Base Radios. The MTS 4 Expansion cabinet supports up to 4 additional Base Radios.

You build up MTS LiTE, MTS 2, and MTS 4 inside cabinets. The MTS cabinets contain card cages. The same card cage is used in MTS 2 and MTS 4 while a separate card cage type is used in MTS LiTE, which in turn house different configurations of modules, for example, Power Supply Units, Base Radios, and Site Controllers. These modules provide the MTSs functionality. The configuration and number of modules determine the MTSs functionality and capacity.

The three versions of MTS are, in general, similar in terms of functionality and the modules that they are comprised of. However, there are a number of important differences between them, which are highlighted in appropriate sections of this document.

The system infrastructures Network Management (NM) applications mange the MTSs. Communication between the MTSs and the NM applications takes place through E1 , X.21, or Ethernet link. Through this link, the NM applications can download new configuration files to the MTSs and receive alarm, event and performance statistics from them.

Note: When an MTS LiTE is managed in TESS application, MTS 2 should be selected.

For information regarding Network Management configuration of the MTS, see the “MTS Site Object” sections of the *Zone Configuration Manager* manual and Online Help.

MTS LiTE Components

The MTS LiTE is comprised of the following components:

- A stainless steel and painted aluminum cabinet
- A removable (hingeless) front door
- A junction panel
- A filter section
- A 19 inch card cage
- Interface cabling
- Internal modules
- Cooling fans (optional)

Note: MTS LiTE is available in 400 MHz and 800 MHz versions.

Figure 1: MTS LiTE Cabinet

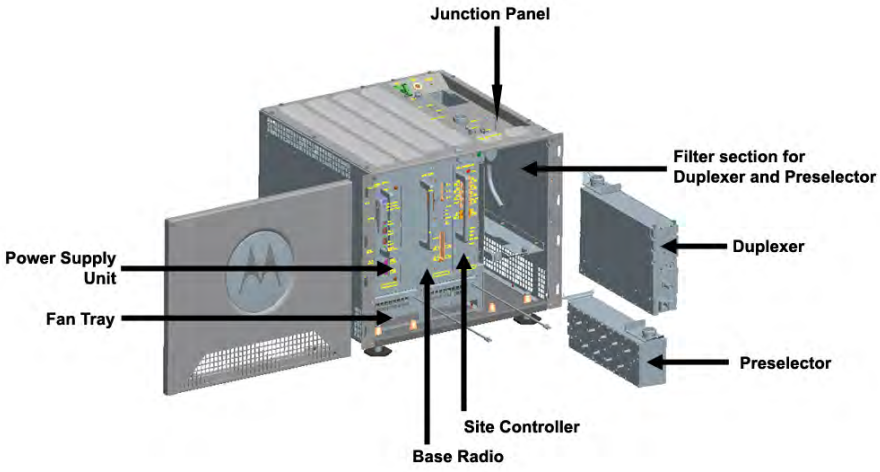

The modules that comprise a typical configuration MTS LiTE cabinet includes the following modules:

- Duplexer
- Preselector
- Site Controller
- Base Radio

- Power Supply Unit

The door of the cabinet has a lock to prevent unauthorized opening. Unauthorized opening of the door generates an alarm.

For a complete description of each module, refer to the appropriate chapter. Each chapter provides the theory of operation, a description of switches, indicators and connectors, and FRU replacement procedures for each module. Configuration and testing, and troubleshooting for MTSs are provided in separate chapters.

MTS 2 Components

The MTS 2 is comprised of the following components:

- A stainless steel and painted aluminum cabinet
- A removable (hingeless) front door
- A junction panel
- A filter section
- A 19 inch card cage
- Interface cabling
- Internal modules
- Cooling fans (optional)

Note: MTS 2 cabinet is available in 260 MHz, 400 MHz, 800 MHz and 900 MHz versions.

Figure 2: MTS 2 Cabinet

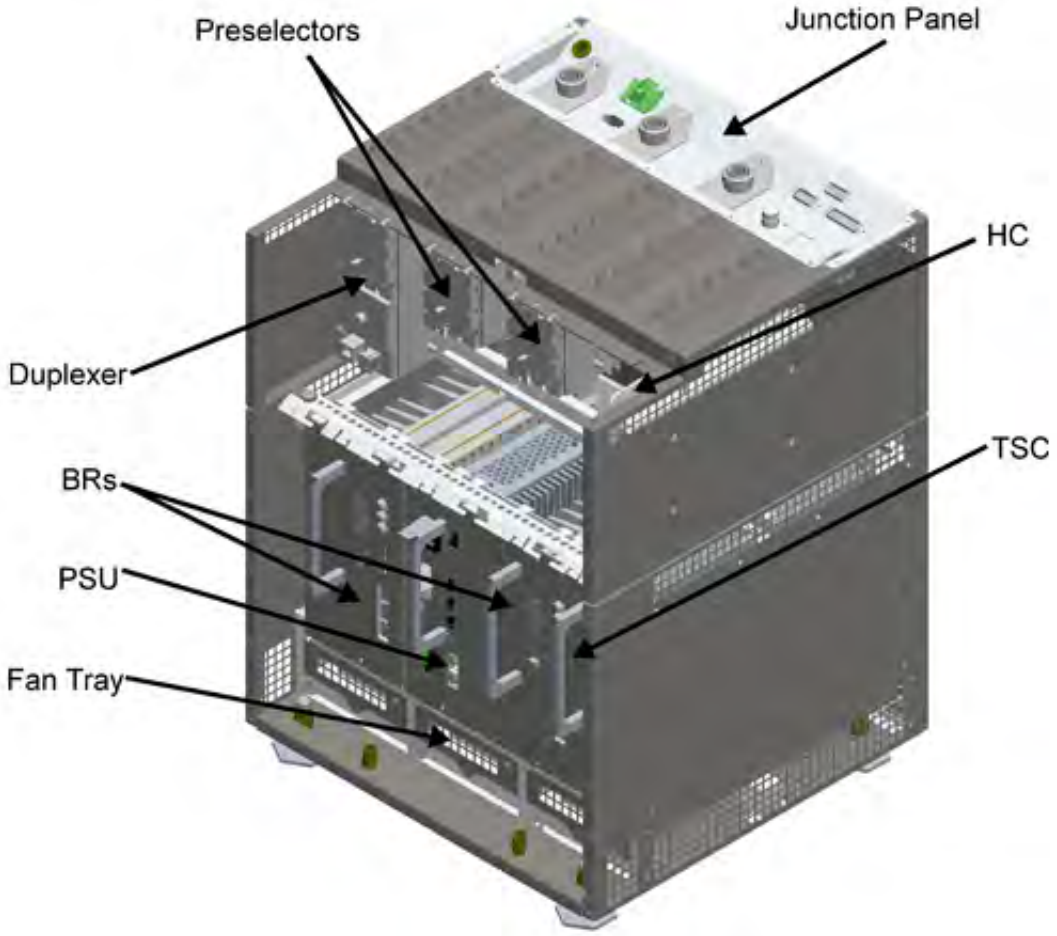

The modules that comprise the MTS 2 cabinet vary based on the type of configuration chosen. A typical configuration includes the following modules:

- Duplexer
- Preselector
- Hybrid Combiner
- Site Controller
- Base Radio(s)
- Power Supply Unit

The door of the cabinet has a lock to prevent unauthorized opening. Unauthorized opening of the door generates an alarm.

For a complete description of each module, refer to the appropriate chapter. Each chapter provides the theory of operation, a description of switches, indicators and connectors, and FRU replacement procedures for each module. Configuration and testing, and troubleshooting for MTSs are provided in separate chapters.

MTS 4 Components

The MTS 4 consists of the following components:

- Stainless steel and painted aluminum cabinet
- Removable front door opening to left or right
- A junction panel
- Filter section
- Combiner section
- One or two 19-inch card cages
- Interface cabling
- Internal modules
- Cooling fans

MTS 4 cabinet is available in 260 MHz, 400 MHz, and 800 MHz versions.

Figure 3: MTS 4 Cabinet

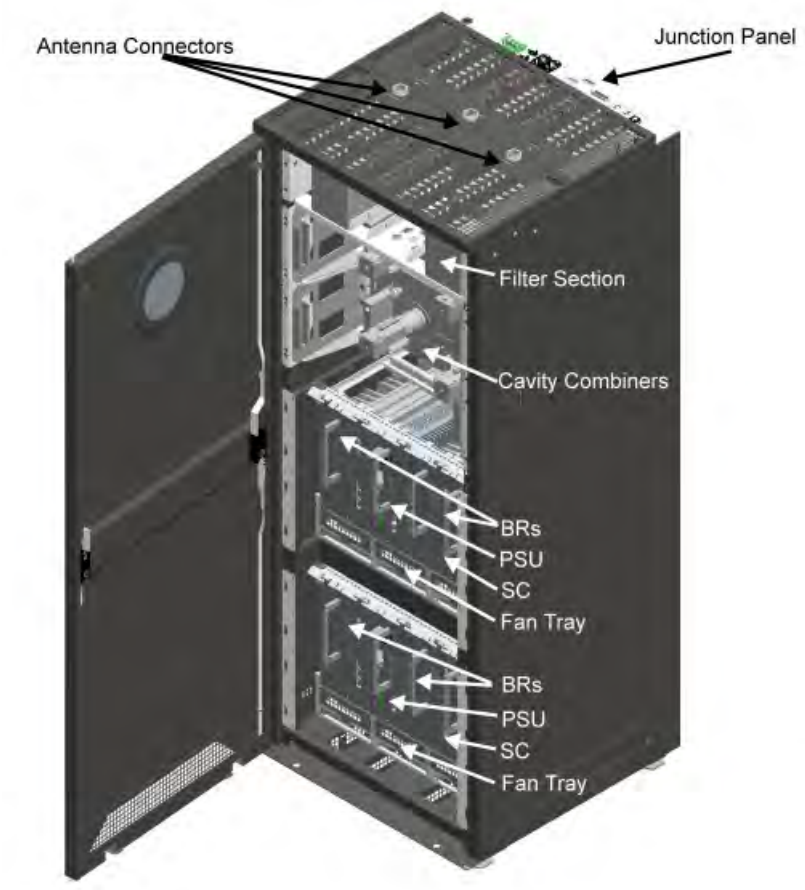

The modules that comprise the MTS 4 cabinet vary based on the type of configuration chosen. A typical configuration includes the following modules:

- Duplexer
- Preselector
- Post Filter

- Cavity Combiner
- Site Controller
- Base Radios
- Power Supply Unit

The cabinet door has a lock that prevents non-permitted access and that generates an alarm if unauthorized door opening occurs.

Expansion Cabinet Components

The Expansion Cabinet is comprised of the following components:

- A stainless steel and painted aluminum cabinet
- A front door opening to the left or right and removable
- A junction panel with AC/DC input
- A filter section (by default only splitters mounted)
- A combiner section
- 1 or 2, 19 inch card cages
- Interface cabling
- Internal modules
- Cooling fans

Figure 4: MTS Expansion Cabinet

The modules that comprise the Expansion Cabinet vary based on the type of configuration chosen. A typical configuration includes the following modules:

- RX Splitter(s)
- Cavity Combiner(s)
- eXpansion HUB (XHUB)
- Base Radios
- Power Supply Unit(s)

The door of the cabinet has a lock to prevent unauthorized opening. Unauthorized opening of the door generates an alarm.

For a complete description of each module, refer to the appropriate chapter. Each chapter provides an overview, a description of switches, indicators and test connectors, and a functional description of each module. Troubleshooting and removal/replacement procedures are also included for modules having Field Replaceable Units (FRUs).

MTS Modules

Each MTS comprises of a number of modules. Some of these modules consist of subcomponents.

MTS modules include:

- RF Distribution System (RFDS) module
- RF Filter module
- Site controller module
- XHUB module
- Base Radio module
- Power supply module
- Cooling fans module

RF Distribution System

The RF Distribution System (RFDS) module has the following subcomponents:

- Preselector (MTS LiTE, MTS 2 and MTS 4 prime only)
- Duplexer (MTS LiTE, MTS 2 and MTS 4 prime only)
- Post Filter (MTS 4 prime only)
- Cavity Combiners (CC) (MTS 4 and Expansion Cabinet only)
- Hybrid Combiner (HC) (MTS 2 and MTS 4 Prime Cabinet only)
- Rx Splitter (Expansion Cabinet Only)

Note: The Preselector types and Duplexer types used in MTS LiTE and MTS 2 are different from the types used in MTS 4.

Preselector

The Preselector is a bandpass filter, which allows only the receiver signals to pass. The Preselector incorporates a Receiver Multicoupler (RMC).

For 400 MHz, the filters bandwidth is 5 MHz, and it is designed to block transmitter frequencies as close as 5 MHz from its band edges.

Table 2: Preselector Filter Bandwidth

MTS Frequency	Bandwidth	Description
260 MHz	6 MHz	Designed to block transmitter frequencies as close as 6 MHz from its band edges.
400 MHz	5 MHz	Designed to block transmitter frequencies as close as 5 MHz from its band edges.
800 MHz	19 MHz	Designed to block transmitter frequencies as close as 19 MHz from its band edges.
900 MHz	5 MHz	Designed to block transmitter frequencies as close as 5 MHz from its band edges.

Duplexer

The Duplexer consists of two bandpass filters. One filter allows the transmitter signal to pass, while the other filter allows the receiver signal to pass.

The Duplexer incorporates both an Receiver Multicoupler (RMC) and a Digital Power Meter (DPM).

The following table describes filter bandwidth depending on the MTS frequency.

Table 3: Duplexer Filter Bandwidth

MTS Frequency	Bandwidth	Duplex Spacing
260 MHz	6 MHz	Duplex spacing between a transmitter frequency and the corresponding receive frequency is 9 MHz.
400 MHz	5 MHz	Duplex spacing between a transmitter frequency and the corresponding receive frequency is 10 MHz, with the transmitter frequency being higher.
800 MHz	19 MHz	Duplex spacing between a transmitter frequency and the corresponding receive frequency is 45 MHz.
900 MHz	5 MHz	Duplex spacing between a transmitter frequency and the corresponding receive frequency is 15 MHz.

Post Filter

A Post Filter consist of one bandpass filter which allows the transmitter signal to pass. The Post Filter supports non-duplexed configurations and incorporates a Digital Power Meter (DPM).

A Post Filter is only available for the MTS 4 as MTS LiTE and MTS 2 do not support non-duplexed configurations.

Cavity Combiners

A Cavity Combiner combines RF signal from a number of different base radios into one transmitter filter.

The following Cavity Combiner (CC) are available:

- Auto Tune Cavity Combiners (ATCC)
- Manual Tune Cavity Combiners (MTCC)

MTCCs are functionally the same as ATCCs except that they are tuned manually instead of electronically.

Note: 260 MHz configurations do not support MTCC.

MTS LiTE and MTS 2 do not support Cavity Combiners.

Minimum channel spacing of the TX channels is 150 kHz while the recommended channel spacing is 250 kHz. This limitation applies to all Cavity Combiners in all cabinets connected to the same transmit antenna.

Hybrid Combiner

A Hybrid Combiner combines RF signal from a number of different base radios into one transmitter filter.

The Hybrid Combiner (HC) combines up to two transmitters.

The combiner has no limitations in respect to channel spacing of the TX channels. However, for frequency planning and interference reasons, at least 50 kHz is recommended.

Note: MTS LiTE does not support Hybrid Combiners.

The following table shows the frequency range covered by various Hybrid Combiners.

Table 4: Hybrid Combiner — Frequency Range

Hybrid Combiner	Frequency Range
260 MHz	260 MHz — 275 MHz
400 MHz	350 MHz — 470 MHz
800 MHZ	850 MHz — 870 MHz
900 MHz	932 MHz — 942 MHz

Rx Splitter

The RX splitter is a passive device, receiving the signal from the Expansion Out connector of the Duplexer/ Preselector in the MTS 4 Prime Cabinet and then distributes it to the Base Radios in the MTS 4 Expansion Cabinet.

Site Controller Module

The Site Controller (SC) controls resources within the base station, including frequency and slot assignment to mobile stations. The Site Controller incorporates a Global Positioning System (GPS), which receives signals for developing high-precision system timing signals.

The Site Controller communicates with the Base Radio through the 100Base-T Ethernet interface and with the network through an X.21 or E1 link.

XHUB

The eXpansion HUB (XHUB) is a non-intelligent switching and interface module, which plugs into the Site Controller slot of an MTS 4 Expansion Cabinet. It is connected through the Expansion Cab output of the Site Controller to the Prime Cab connector of the XHUB.

Base Radio Module

The Base Radio (BR) provides reliable digital communication capabilities. Each Base Radio contains the following subcomponents:

- Transceiver
- Power Amplifier (PA)

Base Radio Transceiver

The transceiver provides the BRs with signal transmission, receiving, processing, and modulation functions, incorporating a Base Radio Controller (BRC), Receiver (RCV), and Exciter (EXC).

The BRC serves as the main controller of the Base Radio, and provides signal processing and operational control for the other Base Radio modules.

Base Radio Power Amplifier

The Power Amplifier (PA) in conjunction with the exciter provides the transmitter functions for the Base Radio. The PA accepts the low-level modulated RF signal from the exciter and amplifies the signal for transmission through the RF output connector.

Power Supply Unit

Depending on the configuration, the MTS includes one or two Power Supply Units (PSUs).

The PSU allows the MTS to operate in any of the following configurations:

- DC power supply
- AC power supply
- AC power supply with a DC backup battery

Backup Battery

The PSU handles the automatic switchover to a backup battery in the event of an AC power supply failure. The MTS charges the backup battery during normal AC operation. A temperature sensor monitors the backup batteries temperature to ensure optimum charging.

Note: The recommended batteries to be used are a Valve Regulated Lead Acid (VRLA) recombination type, with -48 VDC nominal. Such as Enersys Power safe VFT type.

Cooling Fans

One or more fan modules generate an airflow through the MTS cabinets to manage their temperature. Each module is comprised of two fans. Revolution of the fans is monitored by a sensor. In the event of a failure, an alarm will be generated.

Note: Low-power configurations of MTS LiTE and MTS 2 can be operated without cooling fans.

Chapter 2

General Safety

This chapter summarizes the safety-related information that you should both understand and observe when working with Motorola TETRA Stations (MTSs). In addition to the information contained in this chapter, additional safety-related information can be found in other parts of the document.

Important: This is not an exhaustive list of all the precautions and safety measures. Before carrying out any task with the MTS or associated equipment, implement all local and site safety measures.

For full instructions and guidelines, see the *Motorola Standards and Guidelines for Communications Sites, R56* document.

General Safety Precautions

Warning: During thunder storms, do not service any base station or infrastructure items.

Warning: Any device (for example, a power supply) providing isolation between the mains and the MTS must provide reinforced insulation to hazardous voltages. The DC power source providing power to the MTS must comply with requirements specified for a safety extra low voltage circuit (SELV) per EN60950.

Warning: To reduce the risk of injury, use appropriate equipment and number of personnel whenever moving an MTS cabinet.

Warning: This MTS Service Manual is intended for trained technicians experienced with Motorola Base Radio equipment or similar types of equipment.

Warning: Use extreme caution when wearing a conductive wrist strap near sources of high voltage. The low impedance provided by the wrist strap also increases the danger of lethal shock should through accidental contact with high-voltage sources.

Warning: Ensure that all power to the power supply equipment is off to prevent accidental contact with high energy and injury to personnel.

Warning: RF energy burn hazard. Disconnect power in the cabinet to prevent injury while disconnecting and connecting antennas.

Warning: Ensure a good connection between the electrical system ground and site ground to prevent excessive voltage potential between the two ground systems during lightning strikes.

Warning: If cooling fans are fitted, they are exposed after removing the modules from the rack. Touching the running fans poses an injury risk.

Warning: Do not key the base station without a proper load. Risk of burn incidents and damage to the MTS base station.

Caution: Provides a short circuit protection closest to the batteries in the battery installation.

Caution: To prevent damage of the MTS modules by static discharge, always wear the ESD strap when servicing the MTS equipment.

Caution: Ground all antennae cables at the point that they enter the building.

Caution: Antenna design is the customers responsibility. All aspects of antenna design must comply with the relevant local regulations.

Caution: Familiarize yourself with Man-Machine Interface (MMI) commands and their usage before performing procedures in this documentation. Improperly applying MMI commands can result in equipment damage.

Caution: Do not attempt to make a resistance check of the GPS antenna, as it may result in damage to the active devices within the antenna element.

Caution: Do not transmit to an antenna under any circumstance unless frequencies are licensed.

Caution: Do not key any Base Radio with the Signal Generator directly connected to a Tx antenna port as it damages a generator.

Caution: Some commands executed during Conformance Testing bypass normally available alarms and protection associated with the normal MTS operation. Therefore, adhere to all cautionary information and follow instructions exactly as in the procedures.

Caution: The MTS site must meet certain specifications for adequate protection from lightning induced transients. See the *Motorola Standards and Guidelines for Communications Sites, R56* manual.

Caution: The Site Controller motherboard contains a lithium battery. See local regulatory requirements for proper battery disposal.

Important: Install the MTS in restricted access locations, as defined in EN/IEC 60950-1. Only the service personnel or users with appropriate technical experience and training can use the MTS.

Important: Connect the MTS to earth and power it from a 100 V/240 VAC primary power source, or a -48 VDC secondary power source.

Important: The batteries should be installed in the same building and properly ventilated.

Mains Safety

This section contains information specifically related to mains safety when working with or operating MTS.

Warning: Hazardous mains voltages exist within the power supply of the MTS. This module is not designed for field service. Depot servicing must include appropriate precautions when fault finding this switch-mode power supply.

Battery Safety

This section contains information specifically related to safety when working with, or operating the MTS batteries.

Caution: To prevent injury or burns, when replacing a Lithium battery, do not allow metal objects to come in contact with the battery terminals.

Caution: Harmful gases may be generated by the battery backup. Battery backup should only be operated in well ventilated areas.

Warning: Batteries used for powering equipment pose the following risks:

- Explosion hazard resulting from inherent generation of hydrogen sulfide gas.
- Chemical burns/blindness resulting from sulfuric acid electrolyte.
- Very high current capabilities, with the possibility to burn, start fires, and result in arcing.

Warning: Special precautions are required when handling batteries:

- To avoid spilling acid, do not tip batteries.
- Battery acid can cause severe burns and blindness if it comes into contact with skin or eyes. Wash affected skin or eyes immediately with running water. Seek medical help immediately.
- Jewelry should not be worn while working with batteries.
- Installation personnel should wear necessary safety equipment when installing batteries.
- Batteries may require two-person lift. Use proper lifting techniques and equipment to avoid injury. Insulated tools should be used when installing battery systems.

Chapter 7

Radio Frequency Distribution System

The Radio Frequency Distribution System (RFDS) distributes and manages the communications network frequencies and mitigates interference between multiple radios, allowing them to operate simultaneously. This results in improved radio reception performance across the frequency ranges where multiple transmitters are broadcasting.

RFDS Theory of Operation

The RFDS module is made up of the following subcomponents:

- Preselector (MTS LiTE, MTS 2, and MTS 4)
- Duplexer (MTS LiTE, MTS 2, and MTS 4)
- Cavity Combiners (MTS 4 and Expansion Cabinet)
- Hybrid Combiner (MTS 2, MTS 4 uses either HC or CC)
- Post Filter (MTS 4 only)
- RX Splitter (Expansion Cabinet only)

The RFDS module supports the combining and filtering of multiple Base Radio transmitters to one or more antenna outputs. The RFDS module supports up to triple receive diversity. Signals are filtered by either the Duplexer or the Preselector, then amplified and distributed by the integrated Receiver Multicoupler (RMC). In configurations with an Expansion Cabinet, the RX-splitter is used to distribute the received signal.

The RFDS also conditions the transmit and receive signal using filters. After combining the Base Radio transmitters in the Hybrid Combiner (or in the Cavity Combiner in the case of the MTS 4), the transmit signals are filtered in the transmit path of the Duplexer, which supplies the antenna connector on the cabinet.

MTS LiTE, MTS 2 and MTS 4, with or without Expansion Cabinet configuration, use different types of RFDS modules. The following are the distinct differences:

- MTS 2 supports Hybrid Combiners
- MTS 4 supports Cavity Combiners or Hybrid Combiners
- MTS LiTE/MTS 2 and MTS 4 do not use the same filters and mechanics for the filter tray
- MTS LiTE support one RF channel
- MTS 2 supports up to two RF channels
- MTS 4 supports up to four RF channels
- Expansion Cabinet supports eight RF channels (four in MTS 4 Prime Cabinet and four in MTS 4 Expansion Cabinet)

MTS 2 only has up to two carriers (the frequency that it sends out) and, as a result there are no Post Filters for a non-duplexed operation. A non-duplexed operation is achieved using a Duplexer as the Post Filter and not using the receive path of the Duplexer. This configuration does not allow room for a third Preselector inside the cabinet; however, it is possible to situate one outside the cabinet, for example, on the wall.

CAN Bus

The intercommunication between the RFDS units (the Duplexers, Post Filters, and Cavity Combiners) and the Site Controller is carried out through the CAN Bus at 125 kB/second. The connectors for the CAN Bus are RJ45 connectors. The CAN Bus is terminated at each end, either by the Site Controller or by an RJ45 terminator.

Each device is registered at the Site Controller (SC), which specifies the particular channel for each unit. Every 30 seconds, each unit on the CAN Bus transmits status and alarm information. Alarms are triggered when any thresholds are exceeded, (failure alarms, software revisions, and so on). The following common information is available from the CAN Bus: serial number, TrackID, software revisions, and the Motorola kit number. For each unit, specific information is available, for example, voltage standing wave ratio (VSWR) for DPMs and tuning information for Cavity Combiners.

The receive path of the Preselector or Duplexer is not connected to the CAN Bus. Because the supply voltage is supplied from the Base Radio, the Base Radio can withstand a short or 50 ohms connection to the RX input without the Base Radio or the Power Supply Unit (PSU) being damaged.

For more information on CAN Bus, see *Site Controller CAN Bus on page 271*.

RFDS Frequency Band and Bandwidth

MTS LiTE, MTS 2 and MTS 4 are available in the 350 MHz– 470 MHz range. The bandwidth of the filters is 5 MHz and the duplex spacing is 10 MHz.

MTS 2 and MTS 4 are available in the 260 MHz– 275 MHz range. The bandwidth of the filters is 6 MHz and the duplex spacing is 9 MHz.

MTS LiTE, MTS 2 and MTS 4 are also available in the 851 MHz – 870 MHz range. The bandwidth of the filters is 19 MHz and the duplex spacing is 45 MHz.

MTS LiTE and MTS 2 RFDS

In terms of RFDS, MTS 2 uses a low-power, cost effective RFDS placed on top of a card cage, intended for up to 2 Base Radios. For MTS LiTE, the RFDS is placed beside the card cage intended for only 1 Base Radio.

The RFDS in MTS LiTE and MTS 2 is made up of the following:

- One or two Preselectors with integrated high performance low noise amplifier (LNA). The supply voltage for the LNA is supplied through the RX out connected to the Base Radios. The Preselector has two outlets for two Base Radios. The dimensions of the filter are: 85 x 280 x 70 mm, excluding connectors. The antenna connectors are DIN 7–16, the receive side is connected with QMA connectors. See the block schematic of the MTS LiTE/MTS 2 Preselector in *Figure 142: Schematic Diagram of MTS LiTE / MTS 2 Preselector on page 236*.

  Note: MTS LiTE supports up to one Preselector.

- One or two Duplexers rated for up to two TETRA modulated carriers. The antenna connectors are DIN 7–16, the transmit side is connected with QN connectors. The Duplexer has an integrated digital VSWR meter. The supply voltage for the digital VSWR meter is supplied through the CAN Bus interface. The receive side has integrated LNA as for the Preselector and two RX outputs (QMA). The supply voltage for the LNA is supplied through the RX ports. The filter dimensions are approximately: 170 x 280 x 70 mm excluding connectors. See the block schematic of the MTS LiTE/MTS 2 Duplexer in *Figure 144: Schematic Diagram of MTS LiTE / MTS 2 Duplexer on page 239*.

Note:

MTS LiTE supports one Duplexer.

Because the MTS 2 has only up to two carriers, there is no need for Post Filters for non-duplexed operation (you can achieve non-duplexed operation by using the Duplexer as the Post Filter and not using the receive path of the Duplexer).

- Hybrid Combiner. MTS 2 can have either a Hybrid Combiner for transmission on one antenna, or without combining for transmission on two separate antennas.

MTS 2 is equipped with a digital voltage standing wave ratio (VSWR) monitor to ensure site availability at remote low-traffic sites and for public safety customers. The digital VSWR monitor can make a quite accurate VSWR reading because the measurement is relative between the forward and reverse power.

The VSWR monitor does not have the same accuracy in power reading as the digital power monitor (DPM) in the MTS 4, but it still allows a cost-effective monitoring of the integrity of the antenna.

MTS LiTE and MTS 2 Filter Tray

The MTS LiTE filter tray can carry one Duplexer and one Preselector or one Duplexer and no Preselector. The antenna connectors from the Duplexer extend from the MTS LiTE junction panel while antenna connection from the Preselector is connected via the use of cable. Antenna cables are connected directly onto the filters.

Note:

In *Table 71: MTS LiTE RF Configurations on page 231*, Low Power is valid for 400 MHz, while High Power is valid for 400 MHz, 800MHz and 900 MHz. The numbers illustrated are applicable for TETRA.

The MTS 2 filter tray can carry up to two Duplexers and one Preselector or one Duplexer and two Preselectors. There is also room for a Hybrid Combiner. The antenna connectors extend from the MTS 2 junction panel and antenna cables are connected directly onto the filters.

Note: In *Table 72: MTS 2 RF Configurations on page 232*, *Low Power* is valid for 400 MHz and 260 MHz, while *High Power* is valid for 400 MHz, 800MHz and 900 MHz. The numbers illustrated are applicable for TETRA with TEDS numbers within parentheses.

Table 71: MTS LiTE RF Configurations on page 231 lists all filters configurations for MTS LiTE and *Figure 135: MTS LiTE TX/RX on 1 ant. - Filter Configuration on page 232* and *Figure 136: MTS LiTE TX/RX on 1 ant., RX on 1 ant - Filter Configuration on page 232* show the positions of filters in the filter tray.

Table 71: MTS LiTE RF Configurations

RF Configuration	Max Power [W]		Duplexer	Preselector
	Low Pwr	High Pwr		
TX/RX on 1 ant.	25	40	1	-
TX/RX on 1 ant., RX on 1 ant.	25	40	1	1

Figure 135: MTS LiTE TX/RX on 1 ant. - Filter Configuration

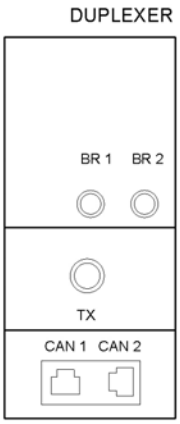

Figure 136: MTS LiTE TX/RX on 1 ant., RX on 1 ant - Filter Configuration

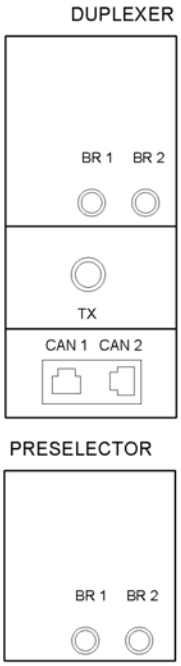

Table 72: MTS 2 RF Configurations on page 232 lists all filters configurations for MTS 2 and *Figure 137: MTS 2 TX/RX on 2 ant. - Filter Configuration on page 233* to *Figure 140: MTS 2 TX/RX on 1 ant., RX on 2 ant - Filter Configuration on page 234* show the positions of filters in the filter tray.

Table 72: MTS 2 RF Configurations

RF Configuration	Max Power [W]		Hybrid Combiner	Duplexer	Preselector
	Low Pwr	High Pwr			
TX/RX on 2 ant.	25	40 (20)	-	2	-
TX/RX on 2 ant., RX on 1 ant.	25	40 (20)	-	2	1

Table continued…

RF Configuration	Max Power [W]		Hybrid Combiner	Duplexer	Preselector
	Low Pwr	High Pwr			
TX/RX on 1 ant., RX on 1 ant.	10	25 (10)	1	1	1
TX/RX on 1 ant., RX on 2 ant.	10	25 (10)	1	1	2

Figure 137: MTS 2 TX/RX on 2 ant. - Filter Configuration

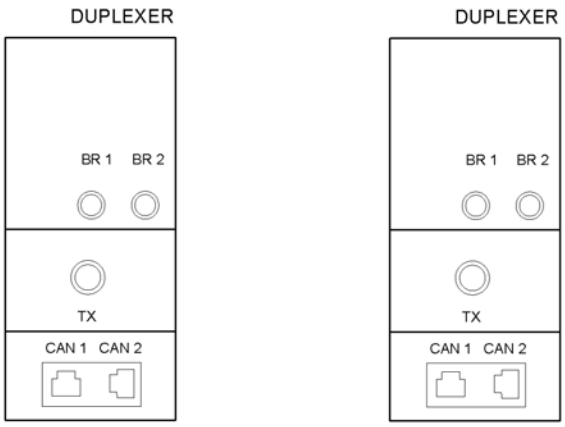

Figure 138: MTS 2 TX/RX on 2 ant., RX on 1 ant - Filter Configuration

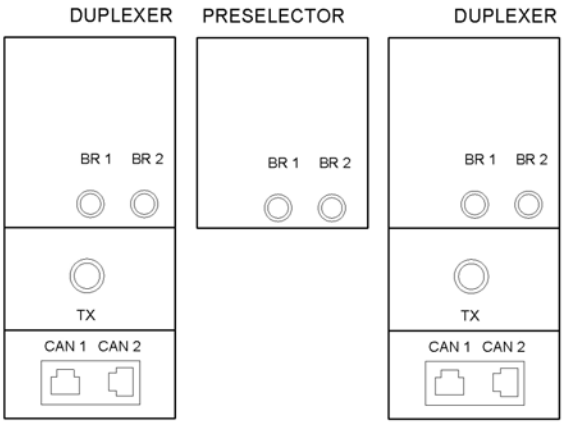

Figure 139: MTS 2 TX/RX on 1 ant., RX on 1 ant - Filter Configuration

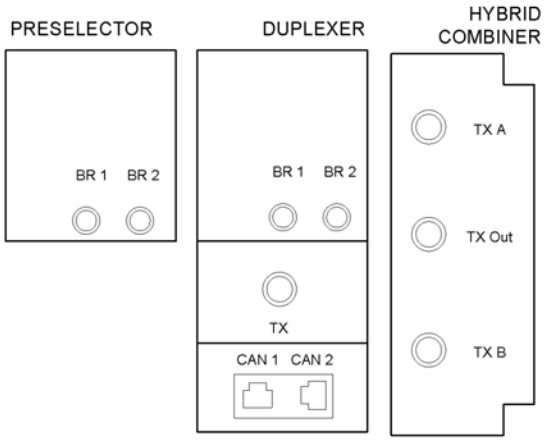

Figure 140: MTS 2 TX/RX on 1 ant., RX on 2 ant - Filter Configuration

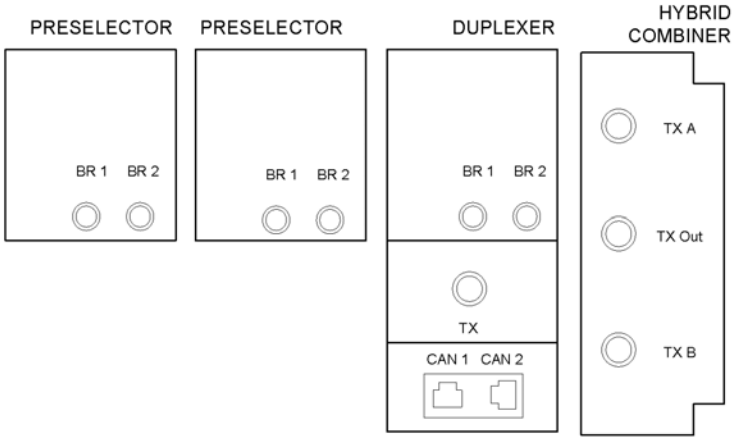

MTS LiTE / MTS 2 Preselector

The MTS LiTE/MTS 2 Preselector is a bandpass filter, which only allows the receiver signals to pass. With a bandwidth of:

- 5 MHz for 400 MHz version
- 6 MHz for 260 MHz version (MTS 2 only)
- 19 MHz for 800 MHz version
- 5 MHz for 900 MHz version

The filters bandwidth is designed to block transmitter frequencies. The receive and transmit bandpass are 10 MHz apart for 400 MHz, 45 MHz apart for 800 MHz and 15 MHz apart for 900 MHz. The Preselector incorporates an LNA followed by an RMC.

Note: The MTS LiTE Preselector FRU is common with the MTS 2 Preselector.

Figure 141: MTS LiTE / MTS 2 Preselector

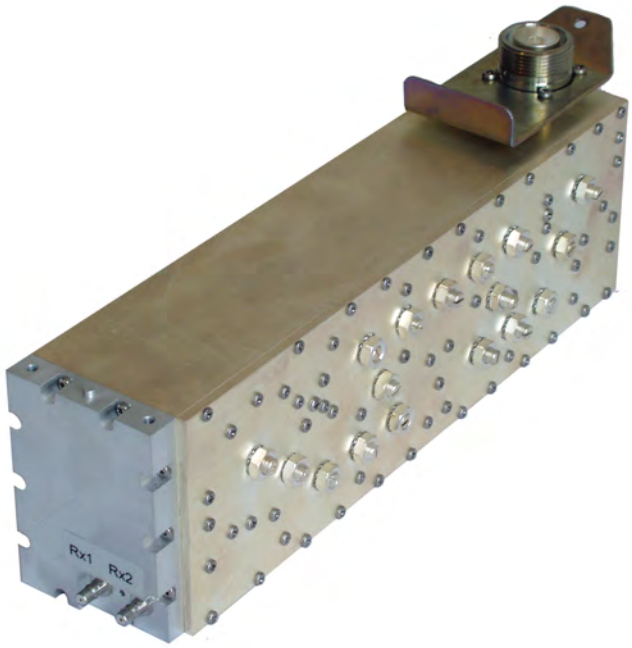

Note: Unused RX outputs should be terminated.

The MTS LiTE/MTS 2 Preselector only has two RX outputs and no expansion output. In MTS LiTE/MTS 2 the Preselector has an integrated high performance low noise amplifier (LNA). The supply voltage for the LNA is supplied through the RX out connected to the Base Radios. The Preselector has two outlets for two Base Radios. The antenna connectors are DIN 7–16, the receive side is connected with QMA connectors. See the block schematic of the MTS LiTE/MTS 2 Preselector in the following figure.

Figure 142: Schematic Diagram of MTS LiTE / MTS 2 Preselector

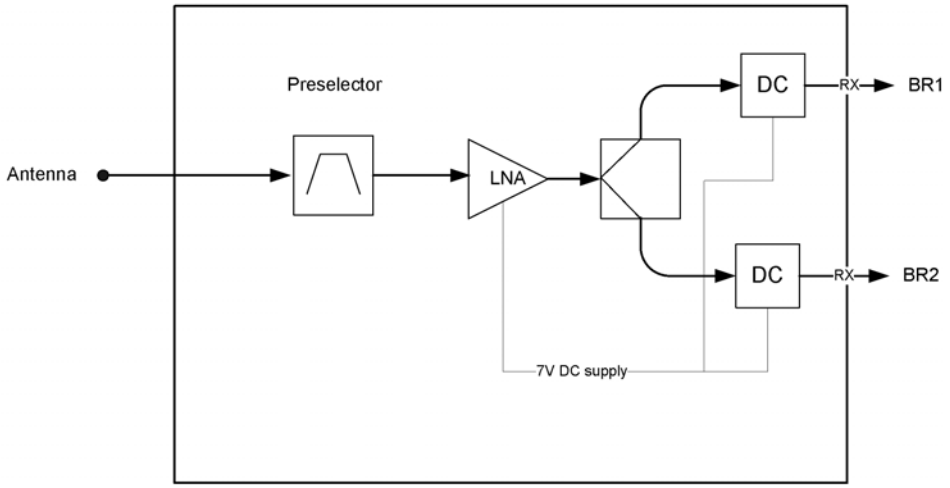

Note: Unused RX outputs should be terminated.

Replacing the MTS LiTE / MTS 2 Preselector

For a list of available FRUs, see *Field Replaceable Units (FRUs) on page 405*.

Prerequisites:

Warning: RF energy burn hazard. Disconnect power in the cabinet to prevent injury and equipment damage while disconnecting and connecting antennas.

Process:

1 Remove the Preselector, see *Removing the Preselector – MTS LiTE on page 236* or *Removing the Preselector – MTS 2 on page 237*.

2 Reinstall the Preselector, see *Reinstalling the Preselector – MTS LiTE on page 237* or *Reinstalling the Preselector – MTS 2 on page 237*.

Removing the Preselector – MTS LiTE

Procedure:

1 Remove the door of the cabinet completely.

2 Unscrew the antenna cable on the Preselector.

3 Remove the two fastening screws behind the antenna.

4 Loosen the two fastening screws at the front enough to free the center tab.

Caution: Do not remove the screws entirely because the filter will drop.

5 Slide the Preselector out of the cabinet.

6 Remove all RX cable connections on the Preselector.

7 Remove and keep the RF Terminator from the BR2 connector.

8 Remove and keep the bracket at the front.

Removing the Preselector – MTS 2

Procedure:

1 Remove the door of the cabinet completely.
2 Unscrew the antenna cable. Remove all RX cables connected to the Preselector.
3 Remove the fastening screw behind the antenna.
4 Loosen the two fastening screws at the front enough to free the center tab.

Caution: Do not remove the screws entirely because the filter will drop.

5 Slide the Preselector out of the cabinet.

Reinstalling the Preselector – MTS LiTE

Procedure:

1 Assemble the rear bracket at the Preselector.
2 Assemble the front bracket at the antenna connector with a screw.
3 Connect the RF Terminator to the BR2 output of the Preselector.
4 Connect the RX cable to the BR1 connector of the Preselector.
5 Slide the Preselector into the filter tray in the cabinet.
6 While supporting the Preselector fasten the screws at the front bracket.
7 Attach the RF cable on the Preselector antenna connector.
8 Switch ON the Power Supply Unit.

Reinstalling the Preselector – MTS 2

Procedure:

1 Slide the Preselector into the filter tray in the cabinet. Make sure the rear center tab fits into the appropriate slot.
2 While supporting the Preselector fasten the two screws at the front.
3 Fasten the screw in the center tab behind the antenna.
4 Attach all RX, TX and signal cables to the Preselector. Fasten the antenna cable.
5 Switch ON the Power Supply Unit.

MTS LiTE / MTS 2 Duplexer

The Duplexer is a Preselector with Integrated Receiver Multicoupler (RMC) and a Post Filter with a digital power monitor (DPM) combined into one unit. These form the two bandpass filters that make up the Duplexer; one is a receive filter and the other a transmit filter.

Note: The MTS LiTE Duplexer is common with the MTS 2 Duplexer.

Figure 143: MTS 2 Duplexer

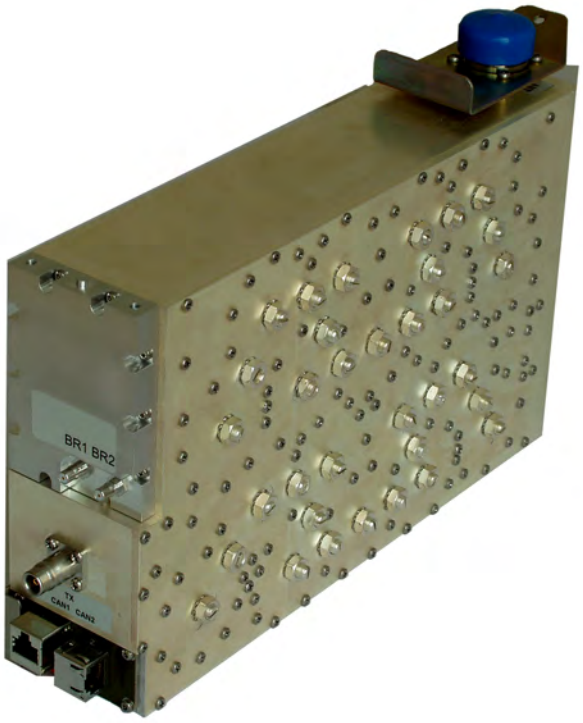

Note: Unused RX outputs should be terminated.

The duplex spacing between a transmit frequency and the corresponding receive frequency is 10 MHz, with the transmit frequency highest. This leaves a 5 MHz spacing between the lowest possible transmit frequency and the highest possible receive frequency.

For MTS 2 260 MHz, the duplex spacing between a transmit frequency and the corresponding receive frequency is 9 MHz, and leaves a 3 MHz spacing between the lowest possible transmit frequency and the highest possible receive frequency.

For 800 MHz, the duplex spacing between a transmit frequency and the corresponding receive frequency is 45 MHz, and leaves a 19 MHz spacing between the lowest possible transmit frequency and the highest possible receive frequency in each duplexer.

For 900 MHz, the duplex spacing between a transmit frequency and the corresponding receive frequency is 15 MHz, and leaves a 10 MHz spacing between the lowest possible transmit frequency and the highest possible receive frequency.

The MTS LiTE/MTS 2 Duplexer has 2 RX outputs and can handle a maximum power of 60 watts.

Note: Unused RX outputs should be terminated.

The receiver LNA and splitter provides multiple receive signal ports. An amplified output is provided for connection to the other cabinet in an expansion configuration.

The digital power monitor (DPM) is a directional coupler that measures forward and reverse Power. Power and VSWR information can be read through the CAN bus.

Figure 144: Schematic Diagram of MTS LiTE / MTS 2 Duplexer

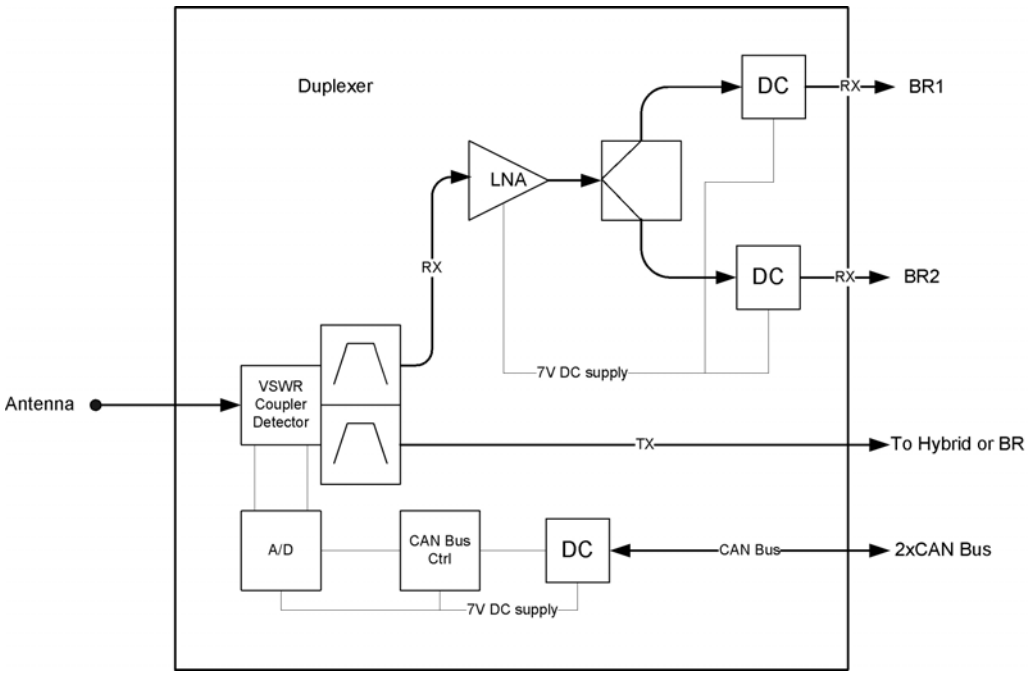

Note: Unused RX outputs should be terminated.

Replacing the MTS LiTE / MTS 2 Duplexer

For a list of available FRUs, see *Field Replaceable Units (FRUs) on page 405*.

Process:

1 Remove the Duplexer, see *Removing the MTS LiTE / MTS 2 Duplexer on page 239*.
2 Insert the Duplexer into the filter tray, see *Inserting the MTS LiTE / MTS 2 Duplexer into the Filter Tray on page 240*.
3 Update the mapping list with the new unit TrackID, see *Updating the Mapping List with the New Unit TrackID on page 240*.

Removing the MTS LiTE / MTS 2 Duplexer

Warning: RF energy hazard and potential equipment damage precaution: Turn off all power to the Power Supply Unit before performing the following procedures to prevent accidental contact with high energy and injury to personnel.

Procedure:

1 Switch OFF the Power Supply Unit.
2 Unscrew the antenna cable. Remove all RX, TX and signal cables connected to the Duplexer.
3 Remove the fastening screw behind the antenna.
4 Loosen the two fastening screws at the front enough to free the center tab.

Caution: Do not remove the screws entirely because the filter will drop.

5 Slide the Duplexer out of the cabinet.

Reinstalling the MTS LiTE / MTS 2 Duplexer

Procedure:

1. Insert the Duplexer into the filter tray.
   See *Inserting the MTS LiTE / MTS 2 Duplexer into the Filter Tray on page 240*.
2. Update the mapping list with the new unit TrackID.
   See *Updating the Mapping List with the New Unit TrackID on page 240*.

Inserting the MTS LiTE / MTS 2 Duplexer into the Filter Tray

Procedure:

1. Slide the Duplexer into the filter tray in the cabinet. Make sure the rear center tab fits in the appropriate slot.
2. While supporting the Duplexer fasten the two screws at the front.
3. Fasten screw in the center tab behind the antenna.
4. Attach all RX, TX and signal cables to be connected to the Duplexer. Fasten the antenna cable.
5. Switch ON the Power Supply Unit.

Updating the Mapping List with the New Unit TrackID

Procedure:

1. Log on to the Site Controller.
2. View the mapping list by entering: `can check_mapping`.
   Step example:

```
Units are present:
Device Track ID
DPM 1 JTH0500101
PSU 1 JTH0500200
Units are not present:
DPM 2 JTH0500105
Track ID not mapped:
JTH0500102
```

3. On the mapping list, locate the removed unit indicated as `Units are not present`.
4. Delete the old CAN Bus unit from the CAN Bus unit mapping list by entering: `can remove_mapping` ***<X>***.
   <X> identifies the old unit name and is digit between 0 and 3.
   Step example: `can remove_mapping dpm 2`.
5. Add the new CAN Bus unit to the CAN Bus unit mapping list by entering: `add_mapping dpm`***<X><track ID>***.
   <track ID> is a Track ID of the new unit.
   <X> identifies the new unit name and is a digit between 0 and 3.

   Note: The new unit Track ID is present on the replaced unit label and indicated as `Track ID not mapped`.

   Step example: `can add_mapping dpm 2 JTH0500102`
6. View the updated mapping list by entering: `can check_mapping`.
7. On the mapping list, check that there are no units labeled as `Track ID not mapped` or `Units are not present`.

Hybrid Combiner

The Hybrid Combiner is a part of the transmitter path in the RF Distribution System. The Hybrid Combiner provides very reliable combining of up to two transmitters. The Hybrid Combiner has no limitations in respect to channel spacing of the TX channels; however, for frequency planning and interference reasons, at least 50 kHz is recommended.

Figure 145: Hybrid Combiner

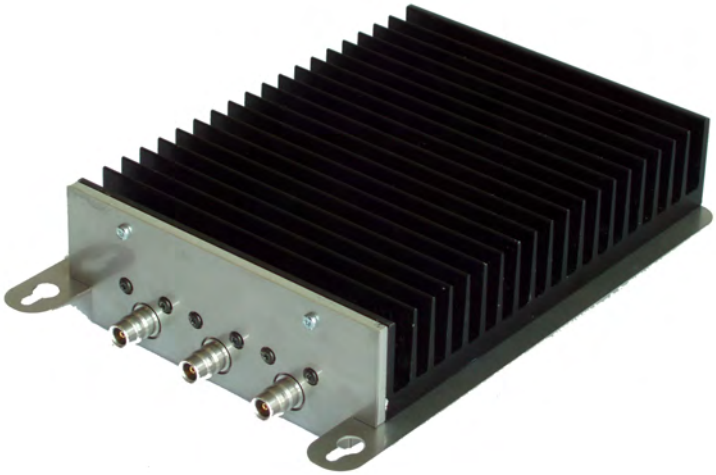

The TX signals from two Base Radios are attached to the respective Hybrid Combiner inputs. The combined signal at the Hybrid Combiner out port is then applied to the Duplexer.

The Hybrid Combiner contains one printed circuit board.

Replacing the Hybrid Combiner

Process:

1. Remove the Hybrid Combiner.
   See *Removing the Hybrid Combiner on page 241*.
2. Reinstall the Hybrid Combiner.
   See *Reinstalling the Hybrid Combiner on page 242*.

Removing the Hybrid Combiner

Procedure:

1. **Warning:** RF energy hazard and potential equipment damage.

   Switch OFF the Power Supply Unit to prevent accidental contact with high energy and injury to personnel.

2 **Warning:** The Hybrid Combiner may be hot.

To avoid injury, allow the Hybrid Combiner to cool down before servicing.

3 Remove the TX and antenna cables.
4 Loosen the two screws that secure the Hybrid Combiner onto the bracket.
5 Slide the Hybrid Combiner forward and pull free from the screws. Slide it out from the bracket.

Reinstalling the Hybrid Combiner

Procedure:

1 Place the Hybrid Combiner on the bracket of the cabinet with the heat sink facing the side of the cabinet.

Note: In the MTS 2, the heat sink should face inwards towards the center of the cabinet.

2 Slide in the Hybrid Combiner at an angle.
3 Secure the lip at the back of the Hybrid Combiner behind the bracket.
4 Fasten the screws to the bracket.
5 Attach the TX and antenna cables.
6 Switch ON the Power Supply Unit.

MTS 4 RFDS

The MTS 4 uses a high-power RFDS intended for up to 4 high power Base Radios. The RFDS in MTS 4 is made up of the following:

- Up to three Preselectors low-loss Preselectors with integrated high performance LNA and RMC. The supply voltage for the LNA is supplied through the RX out connected to the Base Radios. The Preselectors have outputs for four Base Radios. Dimensions of the filter are 90 x 180 x 200 mm excluding connectors. The antenna connectors are DIN 7–16. The RX signals from Base Radios are connected with QMA connectors.
- Up to two Post Filters low-loss Post Filters rated for up to 8 TETRA modulated carriers. The antenna connectors are DIN 7–16, the TX signals to Cavity Combiners are connected with QN connectors.
- Up to two Duplexers Preselectors with an integrated receiver multicoupler (RMC) and a Post Filter with a digital power monitor (DPM) combined into one unit. Duplexer is rated for up to four TETRA modulated carriers. The antenna connectors are DIN 7–16, the transmit site is connected with QN connectors. The receive side has integrated LNA as for the Preselector and four RX outputs (QMA). The supply voltage for the LNA is supplied through the RX ports.
- Hybrid Combiner – combining of four carriers on 2 TX antennas. Cavity Combiners - combining of four carriers on 1 TX antenna.

MTS 4 is equipped with a digital power monitor to ensure diagnostic availability. The digital interface has the same benefits as described for the MTS 2 digital VSWR monitor.

MTS 4 Filter Tray

The MTS 4 filter tray can carry different filter configurations. The antenna connectors extend from the cabinet top cover and antenna cables connect directly onto the filters.

The following table lists all configurations for MTS 4.

Note: The numbers illustrated are applicable for TETRA with TEDS numbers within parentheses.

Low Power is valid for 400 MHz and 260 MHz, while High Power is valid for both 400 MHz and 800 MHz.

Table 73: MTS 4 RF Configurations

RF Configuration	Max Power [W]		Cavity Combiner	Duplexer	Pre se-lector	Post Fil-ter
	Low Pwr	High Pwr				
1 - 2 BRs						
TX/RX on 2 ant.	25	40 (20)	-	2	-	-
TX/RX on 2 ant., RX on 1 ant.	25	40 (20)	-	2	1	-
TX on 2 ant., RX on 2 ant.	25	40 (20)	-	-	2	2
TX on 2 ant., RX on 3 ant.	25	40 (20)	-	-	3	2
TX/RX on 1 ant., RX on 1 ant.	10	25 (10)	1	1	1	-
TX/RX on 1 ant., RX on 2 ant.	10	25 (10)	1	1	2	-
TX on 1 ant., RX on 2 ant.	10	25 (10)	1	-	2	1
TX on 1 ant., RX on 3 ant.	10	25 (10)	1	-	3	1
3 - 4 BRs						
TX/RX on 2 ant.	10	25 (10)	2	2	-	-
TX/RX on 2 ant., RX on 1 ant.	10	25 (10)	2	2	1	-
TX on 2 ant., RX on 2 ant.	10	25 (10)	2	-	2	2
TX on 2 ant., RX on 3 ant.	10	25 (10)	2	-	3	2
TX/RX on 1 ant., RX on 1 ant.	10	25 (10)	2 (comb)	1	1	-
TX/RX on 1 ant., RX on 2 ant.	10	25 (10)	2 (comb)	1	2	-
TX on 1 ant., RX on 2 ant.	10	25 (10)	2 (comb)	-	2	1
TX on 1 ant., RX on 3 ant.	10	25 (10)	2 (comb)	-	3	1

The following figures show the positions of filters in the filter tray.

Figure 146: MTS 4 TX/RX on one Antenna and up to two RX Antennas Filter Configuration

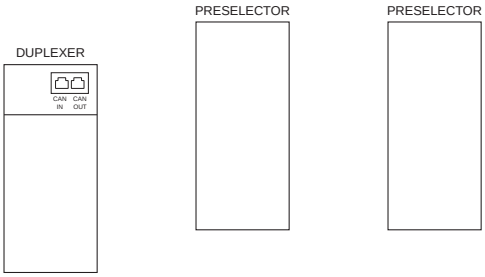

Figure 147: MTS 4 TX/RX on two Antennas and up to one RX Antenna Filter Configuration

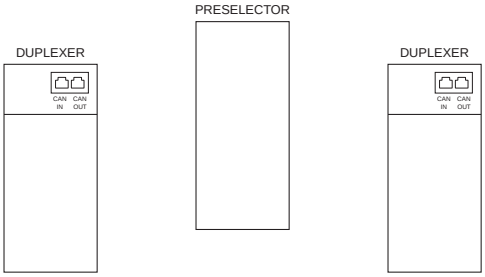

Figure 148: MTS 4 TX on one Antenna and up to three RX Antennas Filter Configuration

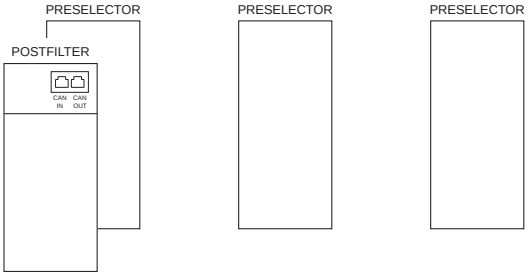

Figure 149: MTS 4 TX on one Antenna and two RX Antennas Filter Configuration

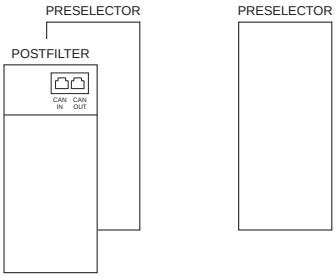

Figure 150: MTS 4 TX on one Antenna and three RX Antennas Filter Configuration

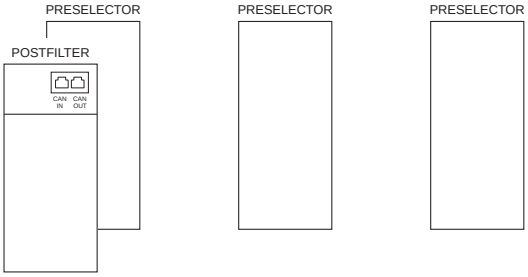

MTS 4 Preselector

The MTS 4 Preselector is a bandpass filter, which only allows the receiver signals to pass.

MTS 4 Preselector bandwidth is:

- 5 MHz for 400 MHz version
- 6 MHz for 260 MHz version
- 19 MHz for 800 MHz version

The filter's bandwidth is designed to block transmitter frequencies. The receive and transmit bandpass are 10 MHz apart for 400 MHz, 9 MHz apart for 260 MHz, and 45 MHz apart for 800 MHz. The Preselector incorporates an LNA followed by an RMC.

The MTS 4 Preselector has four RX outputs and one expansion output.

Figure 151: MTS 4 Preselector

In the MTS 4, the Preselector has an integrated high performance LNA and RMC. The supply voltage for the LNA is supplied through the RX out connected to the Base Radios. The Preselector has outputs for four Base Radios The antenna connector is DIN 7–16. The receive side is connected by QMA connectors.

Figure 152: Schematic Diagram of MTS 4 Preselector

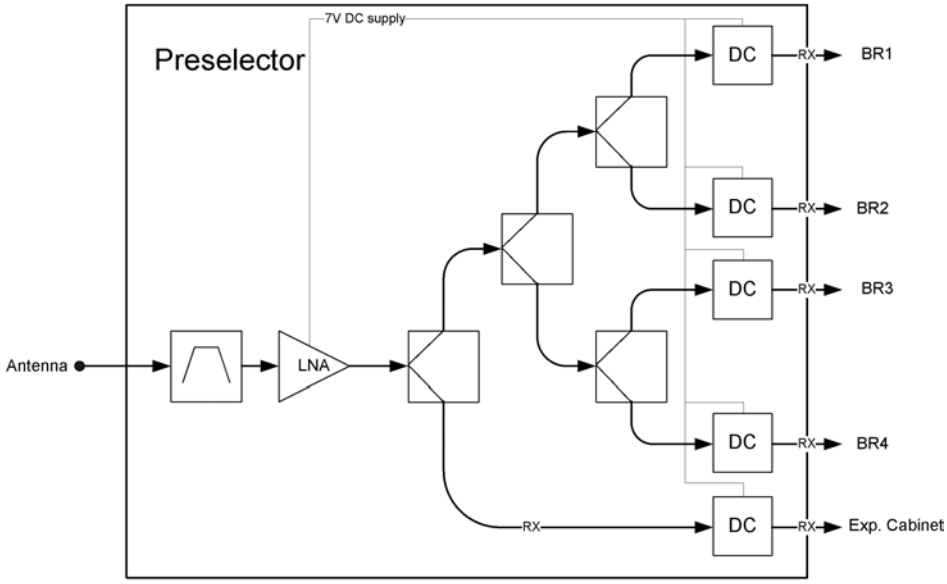

Replacing the MTS 4 Preselector

Warning: RF energy burn hazard. Disconnect power in the cabinet to prevent injury and equipment damage while disconnecting and connecting antennas.

Process:

1 Remove the Preselector.
   See *Removing the MTS 4 Preselector on page 246*.
2 Reinstall the Preselector.
   See *Reinstalling the MTS 4 Preselector on page 247*.

Removing the MTS 4 Preselector

Procedure:

1 Remove the door of the cabinet completely.
2 Remove the four screws holding the front panel.
3 Loosen the two screws holding the front section of the top panel and slide off the panel.
4 Loosen the screws fastening the rear section of the top panel and slide off the panel.
5 Unscrew the antenna cable and remove the RX cables connected to the back of the Preselector.
6 Loosen the two fastening screws at the front enough to free the mounting bracket.
7 Slide the Preselector out of the cabinet.
8 Remove the Preselector from the bracket and replace with the new unit.

Reinstalling the MTS 4 Preselector

Procedure:

1. Fasten the Preselector onto the bracket.
2. Slide the Preselector into the cabinet.
3. Tighten the two fastening screws at the front.
4. Screw on the antenna cable and connect the RX cables to the back of the Preselector.
5. Slide on the top rear and front panels and fasten these with screws.
6. Put the front panel back on and screw this into place.
7. Put the door of the cabinet back on.

MTS 4 Duplexer

The Duplexer is a Preselector with an integrated receiver multicoupler (RMC) and a Post Filter with a digital power monitor (DPM) combined into one unit. These form the two bandpass filters that make up the Duplexer; one is a receive filter and the other a transmit filter. See the block schematic of the MTS 4 Duplexer in *Figure 154: Schematic Diagram of MTS 4 Duplexer on page 248*

For 400 MHz, the duplex spacing between a transmitter frequency and the corresponding receive frequency is 10 MHz, with the transmitter frequency highest. This leaves a 5 MHz spacing between the lowest possible transmit frequency and the highest possible receive frequency.

For 260 MHz, the duplex spacing between a transmit frequency and the corresponding receive frequency is 9 MHz, and leaves a 3 MHz spacing between the lowest possible transmit frequency and the highest possible receive frequency.

For 800 MHz, the duplex spacing between a transmit frequency and the corresponding receive frequency is 45 MHz, and leaves a 19 MHz spacing between the lowest possible transmit frequency and the highest possible receive frequency.

The MTS 4 Duplexer has 4 RX outputs and one expansion output. It can handle a maximum power 180 Watts.

Figure 153: MTS 4 Duplexer

Figure 154: Schematic Diagram of MTS 4 Duplexer

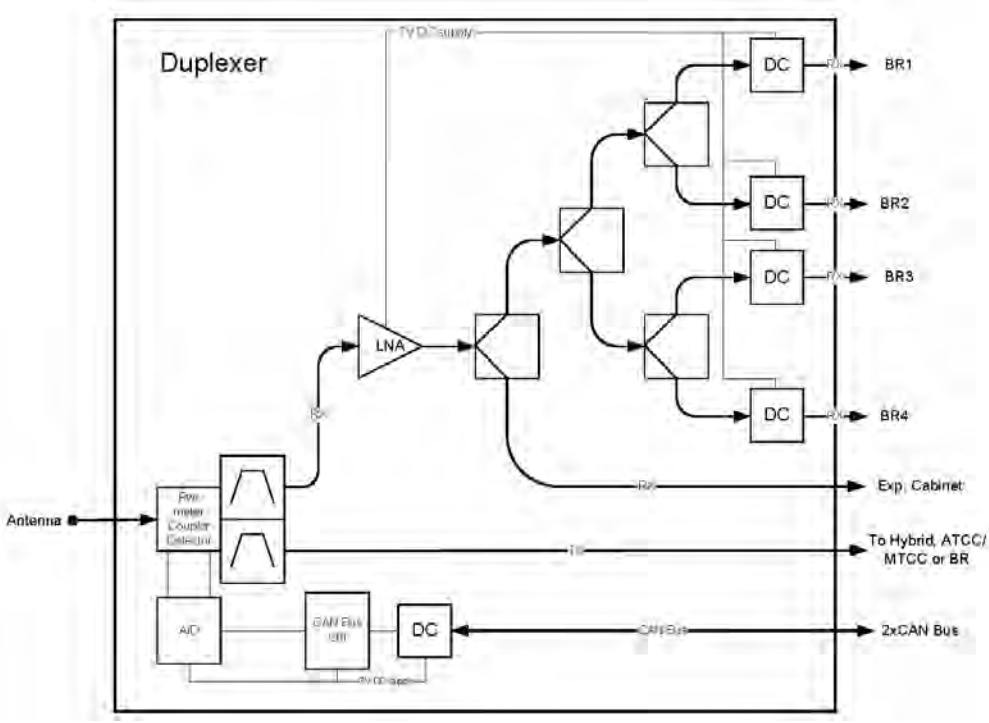

Replacing the MTS 4 Duplexer

Process:

1. Remove the Duplexer.
   See *Removing the MTS 4 Duplexer on page 249*.
2. Insert the Duplexer into the filter tray.
   See *Inserting the MTS 4 Duplexer into the Cabinet on page 249*.
3. Update the mapping list with the new unit TrackID.
   See *Updating the Mapping List with the New Unit TrackID on page 249*.

Removing the MTS 4 Duplexer

Procedure:

1. **Warning:** RF energy hazard and potential equipment damage precaution.

   To prevent accidental contact with high energy and injury to personnel, switch ff all power to the Power Supply Unit.
2. Remove the four screws holding the front panel.
3. Loosen the two screws holding the front section of the top panel and slide off the panel.
4. Loosen the screws fastening the rear section of the top panel and slide off the panel.
5. Unscrew the antenna cable and remove the RX, TX and signal cables.
6. Loosen the two fastening screws at the front enough to free the mounting bracket.
7. Slide the Duplexer out of the cabinet.
8. Remove the Duplexer from the bracket and replace.

Reinstalling the MTS 4 Duplexer

Procedure:

1. Insert the Duplexer into the cabinet.
   See *Inserting the MTS 4 Duplexer into the Cabinet on page 249*.
2. Update the mapping list with the new unit TrackID.
   See *Updating the Mapping List with the New Unit TrackID on page 249*.

Inserting the MTS 4 Duplexer into the Cabinet

Procedure:

1. Fasten the Duplexer onto the bracket with screws.
2. Slide the Duplexer into the cabinet.
3. Tighten the two fastening screws at the front to secure the mounting bracket
4. Attach the antenna cable and the RX, TX and signal cables.
5. Slide on the top rear and front panels and fasten these with screws.
6. Put the front panel back on and screw this into place.
7. Put the door of the cabinet back on.

Updating the Mapping List with the New Unit TrackID

Procedure:

1. Log on to the Site Controller.

2 View the mapping list by entering: `can check_mapping`.
Step example:

```
Units are present:
Device Track ID
DPM 1 JTH0500101
PSU 1 JTH0500200
Units are not present:
DPM 2 JTH0500105
Track ID not mapped:
JTH0500102
```

3 On the mapping list, locate the removed unit indicated as `Units are not present`.

4 Delete the old CAN Bus unit from the CAN Bus unit mapping list by entering: `can remove_mapping` ***<X>***.

<X> identifies the old unit name and is digit between 0 and 3.

Step example: `can remove_mapping dpm 2`.

5 Add the new CAN Bus unit to the CAN Bus unit mapping list by entering: `add_mapping dpm`***<X><track ID>***.

<track ID> is a Track ID of the new unit.

<X> identifies the new unit name and is a digit between 0 and 3.

Note: The new unit Track ID is present on the replaced unit label and indicated as `Track ID not mapped`.

Step example: `can add_mapping dpm 2 JTH0500102`

6 View the updated mapping list by entering: `can check_mapping`.

7 On the mapping list, check that there are no units labeled as `Track ID not mapped` or `Units are not present`.

Hybrid Combiner in MTS 4

For details about the Hybrid Combiner (HC), see *Hybrid Combiner on page 241*.

Post Filter

The Post Filter supports non-duplexed configurations. The Post Filter incorporates a DPM. A Post Filter is only available for the MTS 4 because the MTS 2 does not support non-duplexed configurations. The bandwidth is 5 MHz on 400 MHz, 6 MHz on 260 MHz, and 19 MHz on 800 MHz.

Figure 155: Post Filter

Figure 156: Schematic Diagram of Post Filter

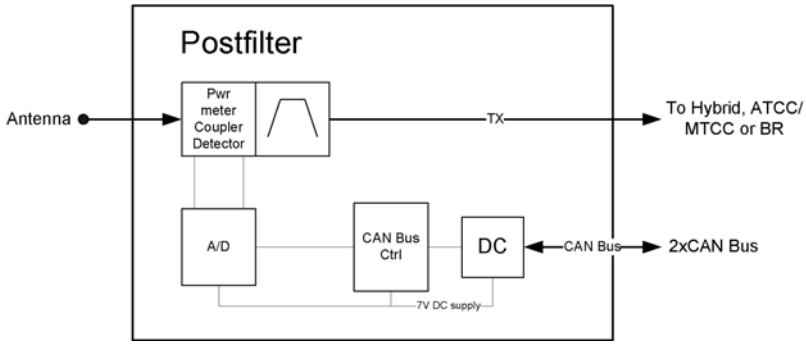

Replacing the Post Filter

For a list of available FRUs, see *Field Replaceable Units (FRUs) on page 405*.

Process:

1 Remove the Post Filter, see *Removing the Post Filter on page 252*.

2 Install the Post Filter into the cabinet, see *Inserting the Post Filter into the Cabinet on page 252*.

3 Update the mapping list with the new unit TrackID, see *Updating the Mapping List with the New Unit TrackID on page 252*.

Removing the Post Filter

Procedure:

1 **Warning:** RF energy hazard and potential equipment damage precaution.

To prevent accidental contact with high energy and injury to personnel, switch off the Power Supply Unit.

2 Remove the four screws holding the front panel.
3 Loosen the two screws holding the front section of the top panel and slide off the panel.
4 Loosen the screws fastening the rear section of the top panel and slide off the panel.
5 Unscrew the antenna cable and remove the TX and signal cables.
6 Loosen the two fastening screws at the front enough to free the mounting bracket.

Note: If a Preselector is mounted on the same bracket, remove the Preselector to slide out the filter bracket. See *Removing the MTS 4 Preselector on page 246*.

7 Slide the Post Filter out of the cabinet.
8 Remove the Post Filter from the bracket and replace with the new unit.

Reinstalling the Post Filter

Procedure:

1 Insert the Post Filter into the cabinet.
See *Inserting the Post Filter into the Cabinet on page 252*.
2 Update the mapping list with the new unit TrackID.
See *Updating the Mapping List with the New Unit TrackID on page 252*.

Inserting the Post Filter into the Cabinet

Procedure:

1 Fasten the Post Filter onto the bracket with screws.
2 Slide the Post Filter into the cabinet.
3 Tighten the two fastening screws at the front to secure the mounting bracket.
4 Attach the antenna and the TX and signal cables.
5 Slide on the top rear and front panels and fasten these with screws.
6 Put the front panel back on and screw this into place.
7 Put the door of the cabinet back on.

Updating the Mapping List with the New Unit TrackID

Procedure:

1 Log on to the Site Controller.
2 View the mapping list by entering: `can check_mapping`.
Step example:

```
Units are present:
Device Track ID
DPM 1 JTH0500101
PSU 1 JTH0500200
Units are not present:
DPM 2 JTH0500105
Track ID not mapped:
JTH0500102
```

3 On the mapping list, locate the removed unit indicated as `Units are not present`.

4 Delete the old CAN Bus unit from the CAN Bus unit mapping list by entering: `can remove_mapping` ***<X>***.

<X> identifies the old unit name and is digit between 0 and 3.

Step example: `can remove_mapping dpm 2`.

5 Add the new CAN Bus unit to the CAN Bus unit mapping list by entering: `add_mapping dpm`***<X><track ID>***.

<track ID> is a Track ID of the new unit.

<X> identifies the new unit name and is a digit between 0 and 3.

Note: The new unit Track ID is present on the replaced unit label and indicated as `Track ID not mapped`.

Step example: `can add_mapping dpm 2 JTH0500102`

6 View the updated mapping list by entering: `can check_mapping`.

7 On the mapping list, check that there are no units labeled as `Track ID not mapped` or `Units are not present`.

Cavity Combiner

Note: MTS 2 does not support Cavity Combiners.

There are two types of Cavity Combiners available:

- Auto Tune Cavity Combiners (ATCC)
- Manual Tune Cavity Combiners (MTCC)

  MTCCs are functionally the same as ATCCs except that they are tuned manually instead of electronically.

  Note: 260 MHz configurations does not support MTCC.

Minimum channel spacing of the TX channels is 150 kHz while the recommended channel spacing is 250 kHz. This limitation applies to all Cavity Combiners in all cabinets connected to the same transmit antenna.

Figure 157: Auto Tune Cavity Combiner

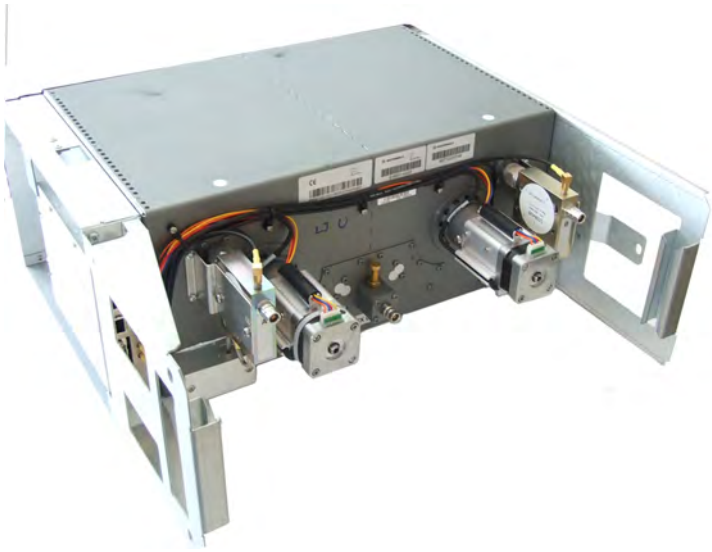

Cavity Combiner - Theory of Operation

A minimum of 2 watts is needed at a cavity input. The ATCC will automatically tune in 40 seconds maximum. For more detail, see the ATCC specification.

Once an RF signal greater than 2 watts is detected, the ATCC tunes the cavity and continuously keeps it tuned over humidity, temperature and changing transmit frequency, so long as it does not sense one of the following alarm conditions:

- Channel Spacing alarm
- VSWR alarm
- Failure to Tune alarm

Being tuned means that a cavity is within the insertion loss specification at the frequency of the applied PI/4DQPSK or QAM4,16,64 signal that is within the average input power range specified above. Being tuned also means that the cavity peak response is no greater than 25 kHz away from the TX carrier center frequency. If the TX carrier does not change channel or average power level, the auto tune algorithm will not initiate a re-tuning on its own which exceeds +/- 300 kHz from the carrier frequency. The only exception occurs when the fine tune timer event happens. The fine tune timer is used to compensate for large variations in humidity and is default set to 480 Minutes. The Cavity Combiner is temperature compensated but large variations in humidity can de-tune the cavities up to 150 kHz with the result of an increasing insertion loss.

When the fine tune timer event occurs, all cavities with RF applied will be re-tuned for maximum output power of each TX carrier. The fine tune timer can be adjusted to compensate for fast humidity variations; for instance if the MTS 4 is installed in outdoor sites without air-conditioning. The recommended setting of the fine tune timer, if the MTS 4 is installed in a controlled environment, is 480 Minutes. For sites where the MTS 4 is exposed to more than +/- 20% variation in RH, the recommended setting of the fine tune timer is 60-200 minutes depending on the speed of the variation.

Having a second cavity tune up and pass through the desired channel, the desired channels insertion loss dips no more than 3 dB more than the max insertion spec for a period of 0.25 seconds. The cavity tuning rate should be faster than 1 MHz per second.

The following list contains control and monitoring features available through the CAN Bus:

- Request current tuned position/frequency of a specific cavity.
- Fine tune time feature, to re-tune each cavity with a specified interval.
- Park an individual cavity, but if RF power is still present, cavity will park and then retune again.
- Input power: request current measured input reflected power of a specific cavity.
- VSWR: request input VSWR of an individual cavity.
- Tuning status of each cavity; parked, tuning, tuned, and parking.
- Alarm conditions of each cavity are reported when requested, including : VSWR, subband, channel spacing and failure to tune.

Replacing the Cavity Combiner

Process:

1. Remove the Cavity Combiner.
   See *Removing the Cavity Combiner on page 254*.
2. Reinstall the Cavity Combiner.
   See *Reinstalling the Cavity Combiner on page 255*.

Removing the Cavity Combiner

Procedure:

1. **Warning:** RF energy hazard and potential equipment damage precaution.

To prevent accidental contact with high energy and injury to personnel, switch off the Power Supply Unit.

2 Remove the door of the cabinet completely.

3 Remove the three screws fastening the Cavity Combiner to the brackets of the cabinet.

Two screws are on the left and one is on the right side of the Cavity Combiner.

4 Remove all TX and signal cables.

5 **Caution:** The Cavity Combiner can weigh up to 11.8 kg (26 lbs.). Use caution when removing or installing Cavity Combiner into the equipment rack. To avoid injury to personnel and equipment damage, ensure that the combiner is fully supported when free from mounting rails.

Slide out the Cavity Combiner.

Reinstalling the Cavity Combiner

Procedure:

1 **Caution:** The Cavity Combiner can weigh up to 11.8 kg (26 lbs). Use caution when removing or installing Cavity Combiner into the equipment rack. To avoid injury to personnel and equipment damage, ensure the combiner is fully supported when free from mounting rails.

Insert the Cavity Combiner into the cabinet.

See *Inserting the Cavity Combiner into the Cabinet on page 255*.

2 **For redundant ATCC only:** Upgrade the redundant ATCC firmware.

See *Upgrading the Redundant ATCC Firmware on page 255*.

3 **For ATCC only:** Update the mapping list with the new unit TrackID.

See *Updating the Mapping List with the New TrackID on page 256*.

Inserting the Cavity Combiner into the Cabinet

Procedure:

1 Slide the Cavity Combiner into the cabinet.

2 Attach the TX and signal cables.

3 Fasten the three screws that hold the Cavity Combiner onto the brackets of the cabinet.

Two screws are on the left and one is on the right side of the Cavity Combiner.

4 Put the door of the cabinet back on.

5 Switch on the Power Supply Unit.

Upgrading the Redundant ATCC Firmware

Procedure:

1 Connect a PC with the TFTP server to the Base Station.

2 Place the new firmware on the TFTP server.

3 Log on to the Site Controller.

4 At the command prompt, enter:
`tftp` ***<IP address>*** `get` ***<tftp server directory>***`\SU11075-15.a90 /ffx/SU11075-15.a90`
The firmware is transferred from the PC to the Base station.

5 Load the file into the ATCC by entering `atc 1 load_program /ffx/SU11075-15.a90`.
The firmware is loaded to the ATCC and the upload status displays.

6 Verify the successful upgrade by entering `atc 1 get device_id`.
The device ID matches the firmware version.

Updating the Mapping List with the New TrackID

Procedure:

1. Log on to the Site Controller.
2. View the mapping list by entering: `can check_mapping`.
   Step example:

```
Units are present:
Device Track ID
DPM 1 JTH0500101
DPM 2 JTH0500105
PSU 1 JTH0500200
Units are not present:
ATCC 1 JTH0500201
Track ID not mapped:
JTH0500102
```

3. On the mapping list, locate the removed unit indicated as `Units are not present`.
4. Delete the old CAN Bus unit from the CAN Bus unit mapping list by entering: `can remove_mapping attc`***<X>***.

   <X> identifies the new unit name and is a digit between 0 and 2.

   Step example: `can remove_mapping atcc 1`
5. Add the new CAN Bus unit to the CAN Bus unit mapping list by entering: `add_mapping attc`***<X><track ID>***.

   <track ID> is a Track ID of the new unit.

   <X> identifies the new unit name and is a digit between 0 and 2.

   Note: The new unit Track ID is present on the replaced unit label as `Track ID not mapped`.

   Step example: `can add_mapping atcc 1 JTH0500102`
6. View the updated mapping list by entering: `can check_mapping`.
7. On the mapping list, check that there are no units labeled as `Track ID not mapped` or `Units are not present`.

Tuning the MTCC in a BTS in Tetra Application Mode

The Manually Tuned Cavity Combiner (MTCC) can have 2 or 4 inputs. The TX output of each BR is connected to an input on the MTCC. The output of the MTCC is connected to the Antenna Port of the BTS via the TX-path of a duplex filter. A configuration file has been uploaded to the Site Controller, defining the TX frequencies of all the BRs.

Equipment: High Power Power Meter (PM) like Stabilock 4032, which can handle up to 120W. Service computer.

Procedure:

1. Calibrate the PM and set the frequency to the center frequency of the duplex filter. Set the PM to display Watts.
2. Connect the PM to the TX antenna connector of the BTS.

3 Loosen the all the locking knobs of the MTCC, see figure below (the design of the MTCC may look slightly different), and turn the tuning knobs counter clock wise as many turns as possible.

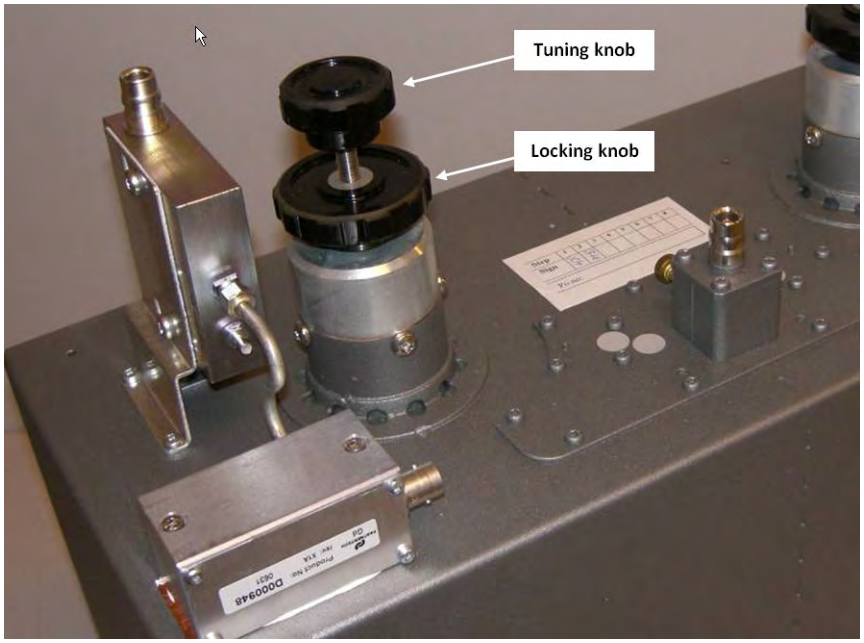

4 Power up the BTS and let all BRs key up. Observe that the TX LEDs of all BRs shine.

5 Connect the service computer to the service port of Base Radio 1 and log on. The service port connector is located on the front panel of the Base Radio module. The default password is `motorola`.

6 At the `BR)` prompt, type: `dekey` This command stops all RF transmission.

7 Repeat step 5 and 6 for all BRs.

8 Observe on the power meter that all BRs have dekeyed and that all TX LEDs are off.

9 Connect the service computer to the service port of Base Radio 1.

10 At the `BR)` prompt, type: `key`. After a while the TX LED of the BR will turn on and the power meter will show the BR output power minus the loss of the MTCC and the duplex filter.

11 Slowly turn the tuning knob of the cavity to be tuned, until the power level displayed at the power meter is at its absolute maximum.

12 Tighten the locking knob.

13 Repeat step 11 and 12 until the power level is still at its absolute maximum with the locking knob firmly tightened.

14 Dekey the BR.

15 Repeat step 9 to 14 for all remaining BRs connected to the MTCC.

Expansion Cabinet RFDS

The Expansion Cabinet uses a high-power RFDS intended for up to four high power Base Radios in addition to the Base Radios in the MTS 4 Prime cabinet. The RFDS in the Expansion Cabinet is made up of the following:

- Up to three RX Splitters – a passive device functioning as an extension for the Receiver Multi Coupler function of the Duplexer/Preselector in MTS 4 to support eight Base Radios. It is connected to the Exp Cabinet connector on the Duplexer/Preselector present in the MTS 4 Prime Cabinet giving the right signal level for the RX-Splitter.
- Cavity Combiners – combining of eight carriers on 1 TX antenna.

Table 74: MTS 4 Expansion Cabinet RF Configurations on page 258 lists the RF configurations of the MTS 4 Expansion Cabinet. In the table, *Low Power* is valid for both 400 MHz and 260 MHz versions of the Expansion Cabinet, while *High Power* is valid for both 400 MHz and 800 MHz versions of the Expansion Cabinet.

Table 74: MTS 4 Expansion Cabinet RF Configurations

RF Configuration	Max Power (W)		Cavity Combiner	RX Splitter
	Low Pwr	High Pwr		
1 – 2 BRs				
TX/RX on 2 ant.	10	25	1	2
TX/RX on 2 ant., RX on 1 ant.	10	25	1	3
TX on 2 ant., RX on 2 ant.	10	25	1	2
TX on 2 ant., RX on 3 ant.	10	25	1	3
TX/RX on 1 ant., RX on 1 ant	8	20	1 + phasing harness	2
TX/RX on 1 ant., RX on 2 ant.	8	20	1 + phasing harness	3
TX on 1 ant., RX on 2 ant.	10	20	1 + phasing harness	2
TX on 1 ant., RX on 3 ant.	10	20	1 + phasing harness	3
3 – 4 BRs				
TX/RX on 2 ant.	10	25	2 (comb)	2
TX/RX on 2 ant., RX on 1 ant.	10	25	2 (comb)	3
TX on 2 ant., RX on 2 ant.	10	25	2 (comb)	2
TX on 2 ant., RX on 3 ant.	10	25	2 (comb)	3
TX/RX on 1 ant., RX on 1 ant.	8	20	2 (comb) + phasing harness	2
TX/RX on 1 ant., RX on 2 ant.	8	20	2 (comb) + phasing harness	3
TX on 1 ant., RX on 2 ant.	8	20	2 (comb) + phasing harness	2
TX on 1 ant., RX on 3 ant.	8	20	2 (comb) + phasing harness	3

Note: For 260 MHz version of MTS there are no phasing harness configurations, so please disregard from these in *Table 74: MTS 4 Expansion Cabinet RF Configurations on page 258*.

Figure 158: Expansion Cabinet with Single Diversity

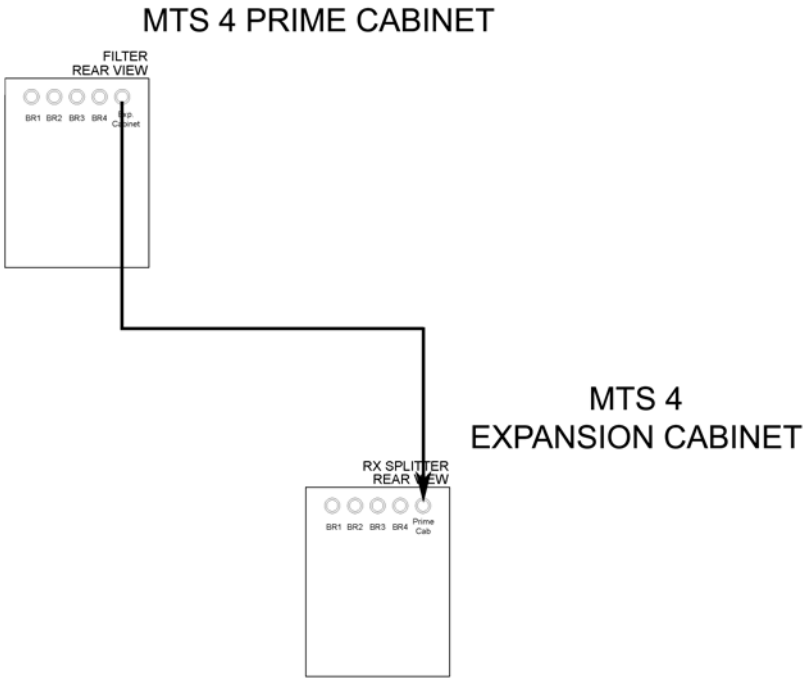

Figure 159: Expansion Cabinet with Dual Diversity

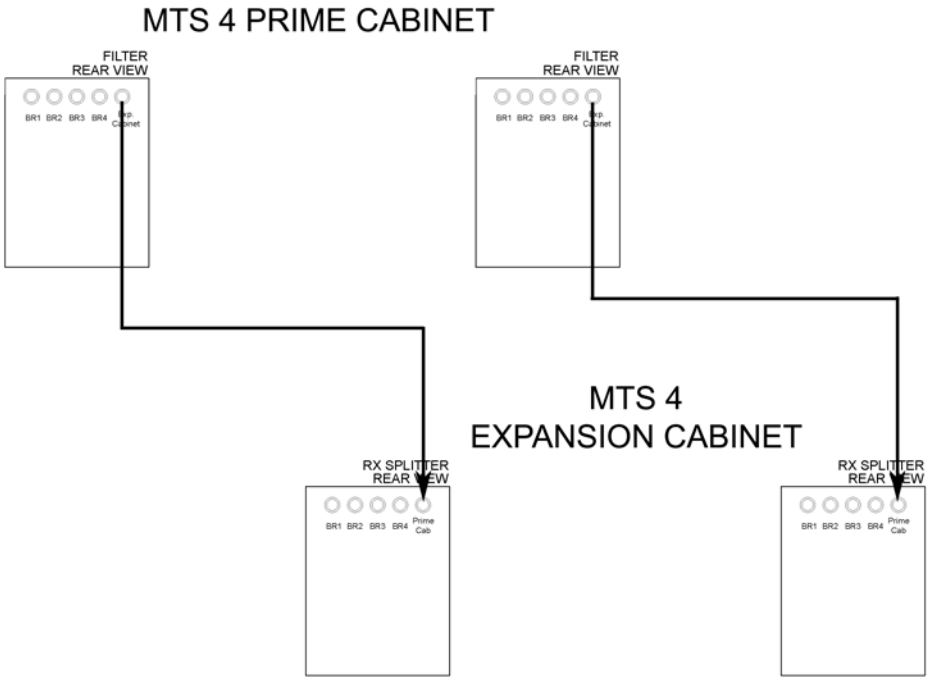

Figure 160: Expansion Cabinet with Triple Diversity

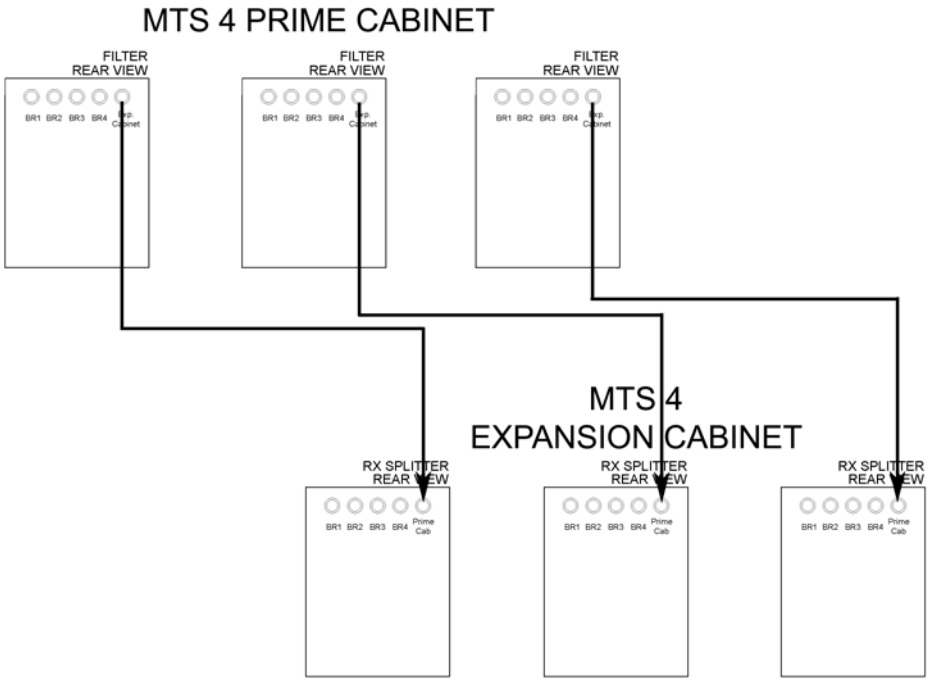

RX Splitter

The RX Splitter is a passive device functioning as an extension for the Receiver Multi Coupler function of the Duplexer/Preselector in MTS 4 to support eight Base Radios. It is connected to the Exp Cabinet connector on the Duplexer/Preselector present in the MTS 4 Prime Cabinet giving the right signal level for the RX-Splitter.

There are two types of RX splitters covering the 260 MHz range and the 350–825 MHz range.

The following figure displays the Expansion Cabinet RX Splitter.

Figure 161: Expansion Cabinet RX Splitter

Figure 162: Schematic Diagram of RX Splitter

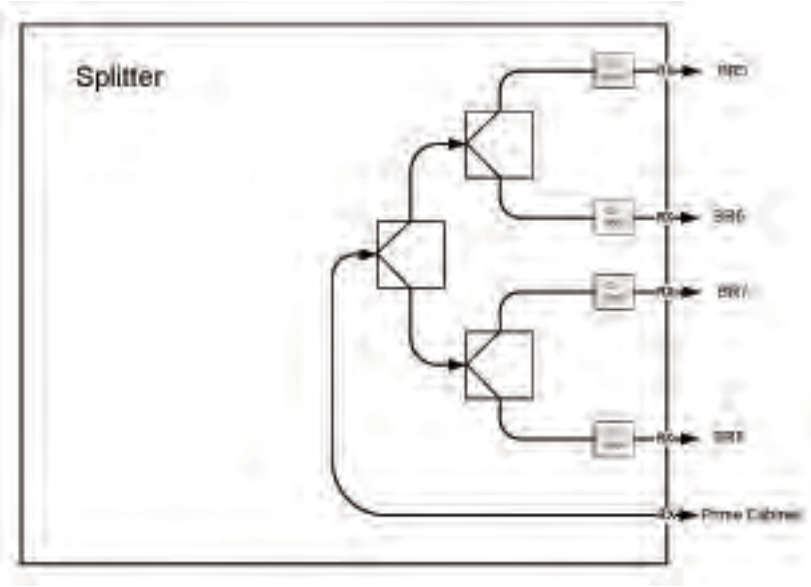

Replacing the Expansion Cabinet RX Splitter

This process outlines the recommended tasks to be performed to replace the Expansion Cabinet RX Splitter. For a list of available FRUs, see *Field Replaceable Units (FRUs) on page 405*.

Process:

1 Remove the RX splitter, see *Removing the RX Splitter on page 261*.
2 Reinstall the RX splitter, see *Reinstalling the RX Splitter on page 261*.

Removing the RX Splitter

This procedure describes how to remove the RX Splitter.

Procedure:

1 Remove the door of the cabinet completely.
2 Remove the four screws holding the front panel.
3 Loosen the two screws holding the front section of the top panel and slide off the panel.
4 Loosen the screws fastening the rear section of the top panel and slide off the panel.
5 Remove the RX cables connected to the back of the RX Splitter.
6 Loosen the two fastening screws at the front enough to free the mounting bracket.
7 Slide the RX Splitter out of the cabinet.
8 Remove the RX Splitter from the bracket and replace with the new unit.

Reinstalling the RX Splitter

This procedure describes how to reinstall the RX Splitter.

Procedure:

1 Fasten the RX Splitter onto the bracket.
2 Slide the RX Splitter into the cabinet.
3 Tighten the two fastening screws at the front.
4 Connect the RX cables to the back of the RX Splitter.
5 Slide on the top rear and front panels and fasten these with screws.

6 Place the front panel back on and screw this into place.
7 Put the door of the cabinet back on.

Cavity Combiner

See *Cavity Combiner on page 253*.

Chapter 8

Site Controller

The following figures show the front and the rear view of the site controller.

Figure 163: Site Controller Front View

Figure 164: Site Controller Rear View

Site Controller – Theory of Operation

The Site Controller controls resources within the MTS, including assignment of frequencies and slots to mobile stations. The Site Controller incorporates a Global Positioning System (GPS) module. The GPS module provides a high precision timing signal used as reference for the Base Radio receive and transmit functionality.

See *Site Controller Specifications on page 366* for Site Controller hardware specifications.

Figure 165: Site Controller - Functional Block Diagram

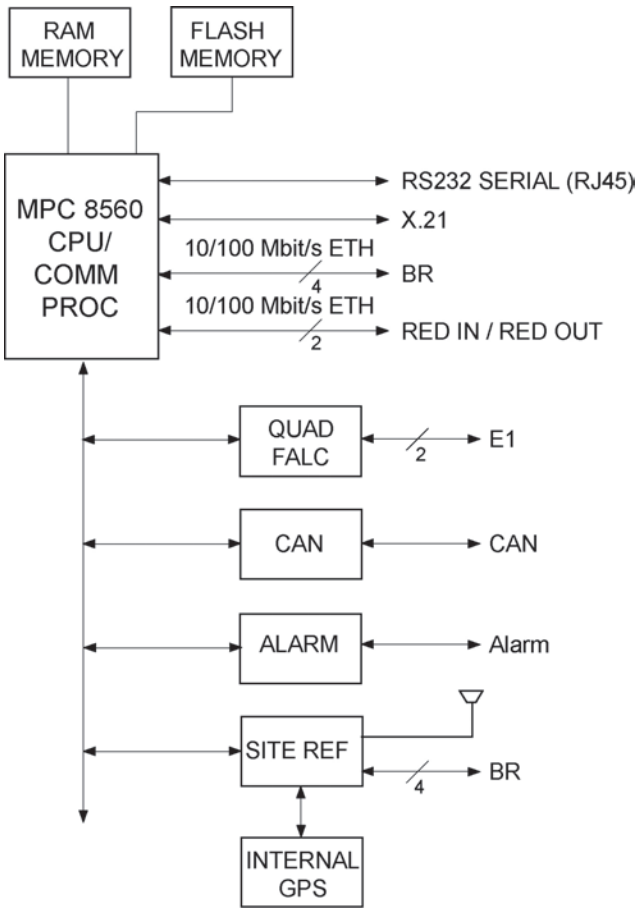

Site Controller – Indicators, Switches, and Connectors

This section contains information on indicators, switches, and connectors of the Site Controller.

Site Controller – Front Panel

Figure 166: Site Controller - Front Panel

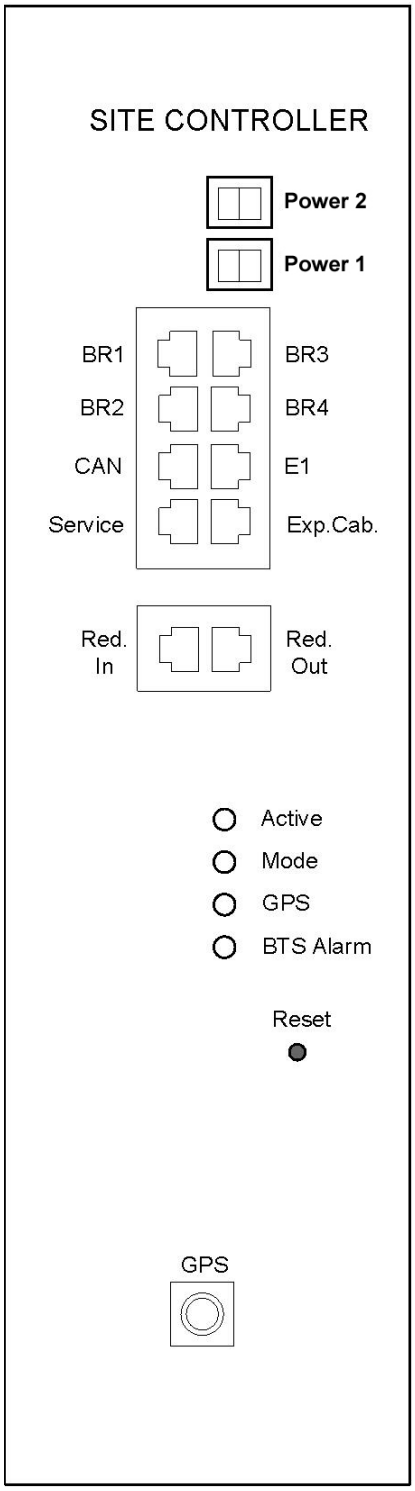

Site Controller – Front Panel Indicators (LED)

Figure 167: Site Controller - Front Panel LEDs Position

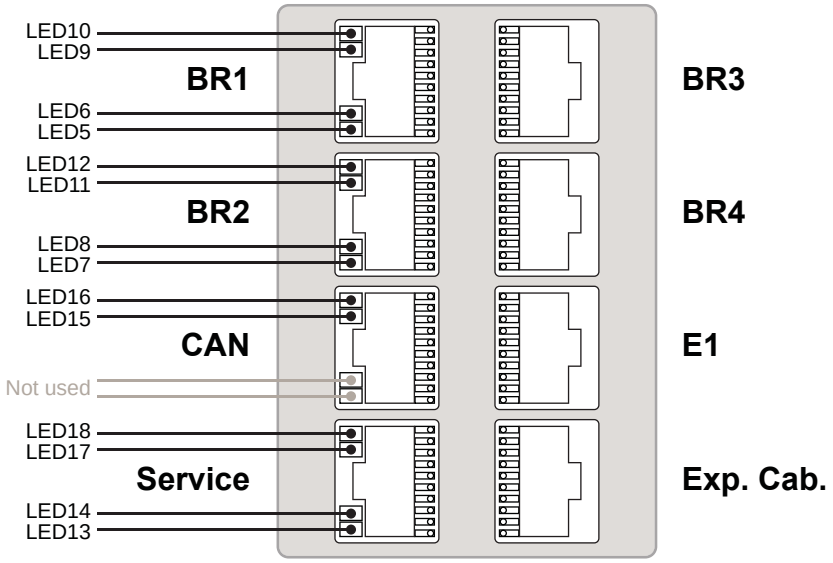

Table 75: Site Controller - Front Panel Indicators (LED)

LED	LED/Port Name	Position	Controlled by	Indication
LED1	Active	Front Panel	SW	Site Controller is active or standby: • OFF: Site Controller main application not running. • GREEN: E1/X.21 relay energized. • AMBER: E1/X.21 relay not energized. • RED: Failed Site Controller, replace FRU.
LED2	Mode	Front Panel	SW	Trunking status: • OFF: Boot up/No trunking/Standby. • GREEN: Wide area trunking. • AMBER: Local site trunking.
LED3	GPS	Front Panel	SW	**Automatic Synchronized Configuration (ASC) Mode**: • OFF: Application is not running. • GREEN: BTS synchronized to GPS. • GREEN/AMBER Blinking: BTS synchronized to a standby SC. • AMBER Blinking: In training. • AMBER: GPS Free run mode synchronized (ETSI spec). • RED: NTP, NTP malfunction.

Table continued…

LED	LED/Port Name	Position	Controlled by	Indication
				• RED Blinking: Calibration is required. • GREEN/RED Blinking: Frequency lock is required, pull in. **Forced Non-Synchronized Configuration (FNC) Mode**: • OFF: Application is not running, free run or NTP. • GREEN: BTS synchronized to GPS. • GREEN/AMBER Blinking: BTS synchronized to a standby SC. • AMBER Blinking: In training. • RED Blinking: Calibration is required. • GREEN/RED Blinking: Frequency lock is required, pull in.
LED4	BTS Alarm	Front Panel	SW	• OFF: No alarms. • GREEN: Not used. • AMBER: CAN Bus problems, External alarms (minor Alarm) • RED: Major/critical alarm, for details see *Table 92: Site Controller LED Fault Indications on page 311*
			SW	3 LEDs blinking together: R (red) RRR->Y (yellow) YYY->G (green) GGG – LED test just after BTS reset or power up
			SW	RRRR blinking – replace the FRU
			SW	RRR blinking – replace the FRU
			SW	R->RR->RRR->RRRR->R->RR->RRR->RRRR-> ... – initializing file system (do not turn off and wait a few minutes, then application and configuration will have to be downloaded after initialization).
LED5	BR1	Port 1 LED1	HW, Enet switch	• OFF: Ethernet link not present. • GREEN: Ethernet link present.
LED6		Port 1 LED2	HW, Enet switch	• OFF: Ethernet activity not present. • YELLOW: Ethernet activity present.
LED7	BR2	Port 2 LED1	HW, Enet switch	• OFF: Ethernet link not present. • GREEN: Ethernet link present.
LED8		Port 2 LED2	HW, Enet switch	• OFF: Ethernet activity not present.

Table continued…

LED	LED/Port Name	Position	Controlled by	Indication
				• YELLOW: Ethernet activity present.
LED9	BR3	Port 3 LED1	HW, Enet switch	• OFF: Ethernet link not present. • GREEN: Ethernet link present.
LED10		Port 3 LED2	HW, Enet switch	• OFF: Ethernet activity not present. • YELLOW: Ethernet activity present.
LED11	BR4	Port 4 LED1	HW, Enet switch	• OFF: Ethernet link not present. • GREEN: Ethernet link present.
LED12		Port 4 LED2	HW, Enet switch	• OFF: Ethernet activity not present. • YELLOW: Ethernet activity present.
LED13	Service	Port 5 LED1	HW, Enet switch	• OFF: Ethernet link not present. • GREEN: Ethernet link present.
LED14		Port 5 LED2	HW, Enet switch	• OFF: Ethernet activity not present. • YELLOW: Ethernet activity present.
	CAN	Port 6 LED1		Not used.
		Port 6 LED2		Not used.
LED15	E1	Port 7 LED1		• OFF: Primary E1 not configured. • GREEN: Primary E1 OK (no LOS (Loss Of Signal)). • AMBER: Errors FE, CRC, BPV, PD. • RED: Primary E1 failure LOS.
LED16		Port 7 LED2		• OFF: Secondary E1 not configured. • GREEN: Secondary E1 OK (no LOS (Loss Of Signal)). • AMBER: Errors FE, CRC, BPV, PD. • RED: Secondary E1 failure LOS.
LED17	Exp.Cab.	Port 8 LED1		• OFF: Ethernet link not present. • GREEN: Ethernet link present.
LED18		Port 8 LED2		• OFF: Ethernet activity not present. • YELLOW: Ethernet activity present.

Site Controller – Front Panel Switches

Table 76: Site Controller - Front Panel Switches

Switch Name	Switch Function
Reset	The front-panel switch can be used to either generate an interrupt to the processor or to initiate a Hard Reset. • Push and hold (1 second) to generate interrupt.

Switch Name	Switch Function
	• Push and hold (>3 seconds) for Hard Reset.

Site Controller – Front Panel Connectors

Table 77: Site Controller - Front Panel Connectors

Connector Name	Connector Type	To/From	Comment
POWER SUPPLY	MOLEX (2 Pin)	PSU	28.5 VDC
BR	RJ45	BR	Ethernet
CAN	RJ45	BR	CAN Bus connection
E1	RJ45	Junction Panel	Pin connections on the Site Controller are different from the ones on the Junction Panel connector.
Service	RJ45	Service Terminal	Provides service access. See *Table 78: Site Controller - Service Cable Pinouts on page 270* for service cable pinout information. (Service Cable PN: 3066565B)
Exp.Cab.	RJ45	XHUB in MTS 4 Expansion Cabinet	Only in configurations with MTS 4 Expansion Cabinet
Red In / Red Out	RJ45	Redundant Site Controller	Ethernet
GPS Antenna (for Site Controller with internal GPS receiver)	QMA	Junction Panel	GPS antenna input. +5VDC bias for active antenna.

Table 78: Site Controller - Service Cable Pinouts

RJ45 PIN	D-SUB 9 FEMALE PIN	Description
1		
2		
3		
4	3	Rx
5	5	GND
6		
7	2	Tx
8	5	GND
9		

Site Controller Rear Panel

Figure 168: Site Controller Rear Panel

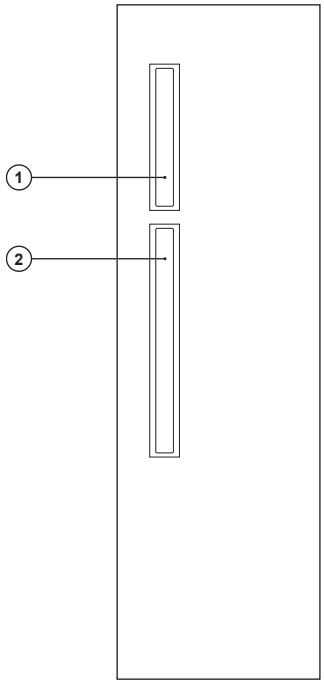

1 — X21/Remote GPS
2 — Alarms/Control

Site Controller – Rear Panel Connectors

Table 79: Site Controller - Rear Panel Connectors

Connector Name	Connector Type	To/From	Comment
Remote GPS/ X.21	IDE 26pin	Junction Panel	Connects to remote GPS/ X.21
Alarms/Control	IDE 34pin	Junction Panel	Provides Alarm/Control interface

Site Controller CAN Bus

The CAN Bus provides a common communication bus between RFDS equipment, Power Supply Unit (PSU) and the Site Controller. The CAN Bus connects to the Site Controller, PSU, DPM, and ATCC. The modules on the CAN Bus are assigned an address for the CAN Bus. When there are more than one modules of the same type, assigned a functionality in MTS to each node. Mapping between the track number, CAN ID, and function relies on the fact that the unique track number is available from each unit.

At initialization of the MTS, the factory configures the Site Controller with a relation between track number and the function of the node. You can modify this configuration in a service situation.

If a node is removed or is defective, the Site Controller knows the track number of a non-responding FRU and therefore it can make a proper service report which tells exactly what FRU to replace. When the service is carried out,

replace the track number of the defective FRU with the new track number in the mapping list, that way the new track number is mapped to the function of the replaced FRU.

Figure 169: Site Controller - CAN Bus

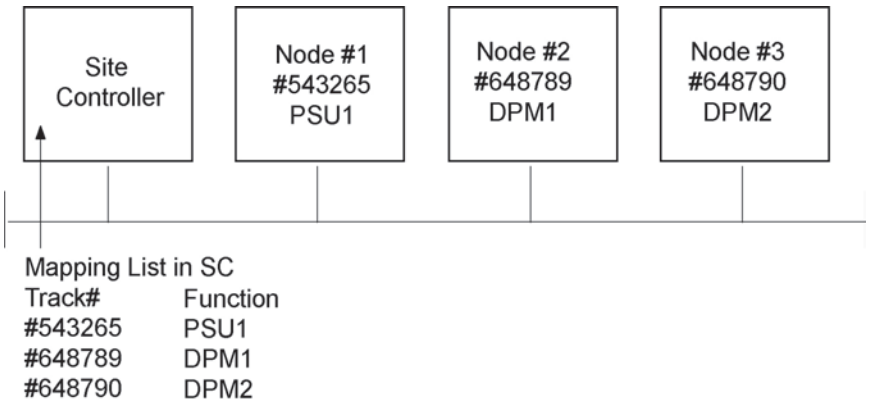

Table 80: Site Controller - CAN Bus Functionality

Unit	Function
PSU	Monitoring: • PSU temperature: -30 °C to +100 °C, tolerance: 2 °C. • Battery current: -20 A to +10 A, tolerance: ±1%. • Battery voltage: 30 V to 60 V, tolerance: ±1%. • Battery temperature: -30 °C to +100 °C, tolerance: 2 °C. • 7 V output voltage: 0 V to 10 V, tolerance: ±2%. • 7 V output current: 0 A to 10 A, tolerance: ±2%. • 28.5 V output voltage: 0 V to 30 V, tolerance: ±2%. • 28.5 V output current: 0 A to 10 A, tolerance: ±2%. • PSU output power: 0 W to 1100 W, tolerance: ±2%. • Fan output voltage: 0 V to 30 V, tolerance: ±2%. • PSU input air temp.: -30 °C to +100 °C, tolerance: ±2 °C.
	Alarms: • DC Source Fail: Indicating DC input voltage outside limits (below 43 V). • DC Out Fail: DC output voltages out of limits. • AC Source Fail: Early warning, indicating that the AC input is interrupted and the PSU starts to operate from DC input source in 15 ms. (if a backup source is present). • Software Fail: Indicating software is corrupted or unable to initialize. • Over Temperature: Indicating over temperature detected 5 °C to 10 °C before shut-down. • Fan 1 alarm: Fan 1 not operating (fan has stopped or its running speed is below specification), PSU has received a high signal (open collector) from fan tray 1 through fan connector 1. • Fan 2 alarm: Fan 2 not operating (fan has stopped or its running speed is below specification), PSU has received a high signal (open collector) from fan tray 2 through fan connector 2. • Fan 3 alarm: Fan 3 not operating (fan has stopped or its running speed is below specification), PSU has received a high signal (open collector) from fan tray 3 through fan connector 3.

Table continued…

Unit	Function
	Controls: • FORCE DC: Controls the PSU to force the usage of the DC input if usable, disregard presence of AC. If DC is outside the usable range for the PSU, the PSU shall indicate an alarm using the DC-fail output. If DC input voltage comes below 43 V ±2% and if AC is usable the PSU shall take the input power from AC, disregarding a Force-DC control input. **Note:** Force DC operation on a bad DC supply PSU or Battery: Bad DC supply is defined as a DC source where the voltage drops below 43 V for a few milliseconds when the PSU is forced to operate on DC. In case of a force DC command and bad DC supply the 28.5 V output voltage is allowed to drop down to 27 V for a maximum of 5 second, while the PSU automatically switches back to AC mode and the 28.5 V rises from 27 V to 28.5 V. During this sequence the DC out alarm is suppressed. • Fan supply output voltage is also controlled by the CAN Bus in 5 steps from 24 V to 12 V. The highest value is set by CAN Bus or automatically. • DC operation only: Prevents AC fail alarms (and associated LED) from the PSU on CAN Bus when the PSU is supplied from DC only. If the AC supply becomes present during DC operation, the AC Source Fail alarm circuit is automatically be reactivated. • AC operation only: Prevents DC fail alarms (and associated LED) from the PSU on CAN Bus when the PSU is supplied from AC only. If the DC supply becomes present during AC operation, the DC-Fail alarm circuit is automatically reactivated. • No Fan 1: Prevents Fan 1 alarm (and associated LED) when no fan 1 is connected. If the Fan1 becomes present during operation, the Fan1 alarm circuit is automatically reactivated. • No Fan 2: Prevents Fan 2 alarm (and associated LED) when no fan 2 is connected. If the Fan2 becomes present during operation, the Fan2 alarm circuit is automatically reactivated. • No Fan 3: Prevents Fan 3 alarm (and associated LED) when no fan 3 is connected. If the Fan3 becomes present during operation, the Fan3 alarm circuit is automatically reactivated. **Note:** See the *MMI Commands* manual for additional information on commands and parameters.
ATCC	Monitoring: • Cavity status. • ATCC Heartbeat signal: heart beat signal is repeated every 30 s. Alarms: • Software corrupted. • Distance between two channels below 150 kHz. • Cavity VSWR alarm. • Master Slave communication error. • Motor alarm. • Cavity tuning error alarms together. • VSWR exceeded the specified value. • Unable to park cavity. • Cavity unable to tune to the current frequency in 3 attempts. Controls:

Table continued…

Unit	Function
	• Cavity tune timeout: establishes a timeout period between a fine-tuning of the cavities. All cavities must be fine-tuned at the timeout. • Park a cavity: instructs the ATCC to park the specified cavity. This involves adjusting the cavity resonance to a frequency outside of the Tx band. If RF power is present, the cavity parks and then re-tunes to the input frequency. • VSWR Alarm Threshold: establishes a threshold for enabling a VSWR Alarm. Valid threshold values are in the range 1.00 to 10.00 where 1.00 means **No VSWR**. Recommended values for each MTS configuration are: - **400 MHz:** 3.00 - **260 MHz:** 3.00 - **800 MHz:** 4.00
DPM (Duplexer, Post Filter)	Monitoring: • Forward power on a digital power monitor: the input power range is from 0 W to 150 W. • Reverse power on a digital power monitor: the input power range is from 0 W to 40 W. • VSWR from a DPM. • DPM temperature. • DPM Heartbeat signal. Alarms: • SW is corrupted or unable to initialize. • VSWR alarm. Controls: • VSWR Alarm Threshold: establishes a threshold for enabling a VSWR Alarm. Valid threshold values are in the range 1.00 to 10.00 where 1.00 means **No VSWR**. Recommended values for each MTS configuration are: - **400 MHz:** 3.00 - **260 MHz:** 3.00 - **800 MHz:** 4.00

Updating CAN Bus TrackID Mapping List

When and where to use:

Perform this procedure to update the Mapping List with the New Unit TrackID.

Procedure:

1 Log on to the Site Controller.

2 To view the mapping list, type `can check_mapping`.

See example below:

```
SC> can check_mapping
Units are present:
Device Track ID
DPM 1 JTH0500101
PSU 1 JTH0500200
Units are not present:
DPM 2 JTH0500105
```

```
Track ID not mapped:
JTH0500102
```

3 On the list, locate the unit that you have removed and that is indicated as `Units are not present`.

4 Delete old CAN Bus unit from the CAN Bus unit mapping list. Type `can remove_mapping <Device>`, where <Device> is the old unit name. See example below:

```
SC> can remove_mapping dpm 2
```

5 Add new CAN Bus unit to the CAN Bus unit mapping list.

Note: The new unit Track ID is present on the replaced unit label and indicated as `Track ID not mapped` in the list shown in *step 2*.

Use `can add_mapping <Device> <TrackID>`, where< TrackID> is a TrackID of the new unit and <Device> is the new unit name. Units have the following names: psu X, dpm X, atcc X, where X denotes a digit between 0 and 3. See example below:

```
SC> can add_mapping dpm 2 JTH0500102
```

6 View the updated mapping list using the `can check_mapping` command and check that there are no units labeled as `Track ID not mapped` or `Units are not present`.

Site Controller – GPS Module

The GPS module generates a highly accurate timing reference signal within the Base Station. To do this a proper GPS signal must be provided to the QMA input connector on the Site Controller Front Panel. The Site Controller provides a +5 V dc supply voltage on the QMA connector. It is intended to be used to provide a voltage supply for active antennas.

Note:

See *Hardware Installation on page 75* for description of external GPS.

See respective restoration manual (DIPS/DIPC systems) or *Service Manual* (DIPM system) for procedures on how to verify the internal and external GPS module.

Site Controller – Lithium Battery

This section contains procedures on how to check if the lithium battery needs changing and how to correctly replace it.

Resetting the RTC Battery Status

The following procedure describes how to reset the status of the RTC battery. Perform this procedure after each RTC battery replacement.

Procedure:

In TETRA Application, enter `hw rtc reset batteryStatus`
The following message appears:

```
reset RealTimeClock battery status
  - Status: OK
```

Checking if the Site Controller Lithium Battery Needs Changing

Procedure:

1. Perform *Resetting the RTC Battery Status on page 275*.
2. Power down and then Power up the MTS.
3. Use the Site Controller Test Application to check the RTC alarm by typing `alarms -ofault_hndlr` and press **Enter**.
4.
   - If the battery is OK there should be no RTC related alarms reported. There is no need to change the Site Controller Lithium Battery.
   - If the battery still reports RTC related alarms, the battery is not working properly or not working at all. Proceed to *Replacing the Site Controller Lithium Battery on page 276*.

Replacing the Site Controller Lithium Battery

Caution: Danger of explosion if battery is replaced incorrectly. Replace battery only with the same or equivalent type recommended by manufacturer. Dispose of used batteries according to the manufacturers instructions.

Procedure:

1. Examine the contents of the flash filling system using the monitor command `SC> attrib`. Record the file attributes for each of the files.
2. **Warning:** Shock Hazard. The MTS contains dangerous voltages which can cause electrical shock or damage to equipment. Turn off the MTS and remove the power cabling before servicing this equipment. Make sure that all power is off to prevent accidental contact with high energy and injury to personnel.

   Switch the MTS Power Supply Unit OFF.

   Important: If two PSUs are present, switch off the supplying the Site Controller being replaced. Do not power down the MTS. In configuration with non-redundant power connection, the MTS Power Supply Unit can be switched off as an alternative to removing the cables.
3. Wear an ESD strap and connect its cable to a verified good ground. This strap must be worn to prevent ESD damage to any components.
4. Tag and disconnect any cabling from the Site Controller.
5. Loosen the two M4X10 captive screws securing the Site Controller to the chassis.

Figure 170: Site Controller - Captive Screws

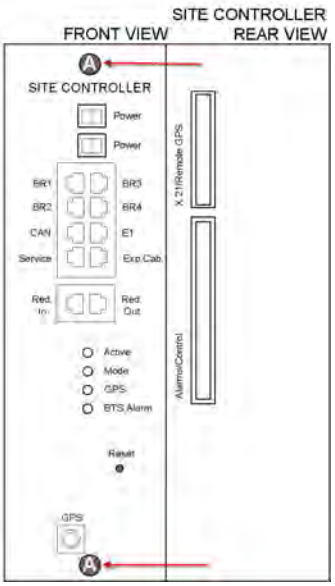

6 Use the handle, and gently slide the Site Controller from the slot, removing it from the chassis.

Important: There are cables connected at the rear of the Site Controller. Slide out the Site Controller carefully, tag and disconnect ribbon cables at the rear.

7 Remove the Site Controller cover. Unscrew 19 screws securing the cover and slide it off gently to avoid damage to components installed on the board (the cover can harm the springs on the RJ45 connectors (front side connectors), when the cover has been slid nearly completely off).

8 Remove the old battery from the socket on the board.

Figure 171: Site Controller - Lithium Battery Location

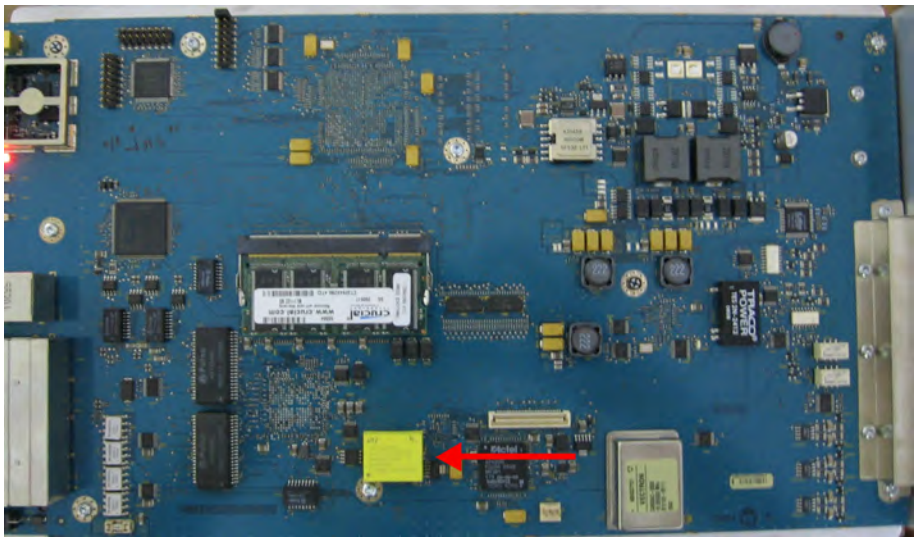

9 Install a replacement battery (Motorola p/n 5185151Y02) in its socket on the board.

Important: Dispose or recycle the used battery according to local regulations.

10 Slide the cover gently on and secure it with 19 screws.

11 Install the Site Controller into the MTS. Use the handle to slide the unit into the chassis.

Important: Connect the ribbon cables at the rear before sliding the unit into the chassis.

12 Secure the Site Controller in the chassis with the captive screws.

13 Except the power cables, reconnect all other cabling to the unit as tagged during the removal.

14 Power up the Site Controller:

- **a** Reconnect the power cables to the MTS Power Supply Units.
- **b** Set the power switch to the ON position.

15 Perform *Resetting the RTC Battery Status on page 275*.

Chapter 9

XHUB Controller

Note: The content of this chapter is only supported in Dimetra IP system releases D6.0 and later.

This chapter covers the following topics:

- *XHUB Controller – Theory of Operation on page 280*
- *XHUB Controller – Indicators, Switches, and Connectors on page 281*

Figure 172: XHUB Controller

XHUB Controller – Theory of Operation

Note: MTS 4 sites equipped with Site Controller Rev A or B may experience service interruption to Base Radio(s) located in the Expansion Cabinet. Prior to Expansion Cabinet installation, Site Controllers of Rev A or B must be sent to factory for FPGA upgrade or replacement. Please see TIB 3592 for more information.

The eXpansion HUB (XHUB Controller) is a non-intelligent switching and interface module which plugs into the Site Controller slot of MTS 4 Expansion Cabinet. With the usage of an Expansion Cabinet and an XHUB, a station can be increased by a number of four Base Radios. The XHUB receive the CP3 interface from the Site Controller in the Prime Cabinet, distribute the Enternet and timing as CP2 links to the Base Radios in the Expansion Cabinet. The XHUB also have a door alarm input. The RFDS alarms is reported through the CAN bus or the receivers. The XHUB has following modes of operation:

- **Normal mode:** XHUB Controller in the MTS 4 Expansion Cabinet has an active connection with a Site Controller in the MTS 4 Prime Cabinet. The XHUB may be used to extend the switching and interface capabilities of the Site Controller.
- **Impaired Normal mode:** If connection to the Site Controller of the MTS 4 Prime Cabinet is lost, the XHUB Controller will go into Impaired Normal mode. It will return to Normal mode as soon as the connection to the Site Controller is restored.
- **Standalone mode:** If no connection to the Site Controller is present when the XHUB is turned ON or being Reset, it will go into Standalone mode. In order to go to Normal mode, the XHUB Controller needs to be Reset again.

Note: The Site Controller door alarm configuration is also valid for the XHUB.

Figure 173: XHUB Controller – Functional Block Diagram

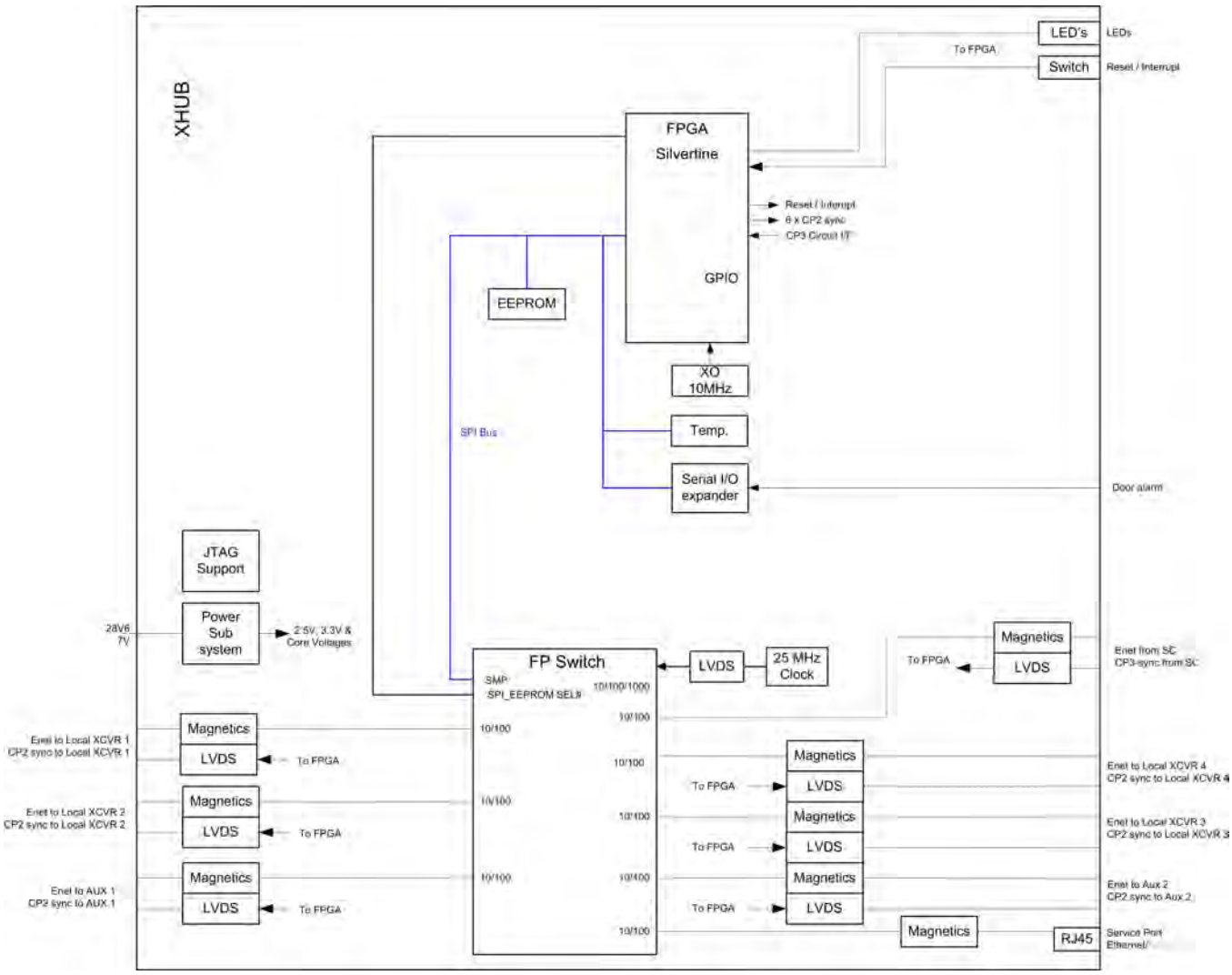

XHUB Controller – Indicators, Switches, and Connectors

This section contains information on indicators, switches, and connectors of the XHUB Controller.

XHUB Controller – Front Panel

Figure 174: XHUB Controller- Front Panel

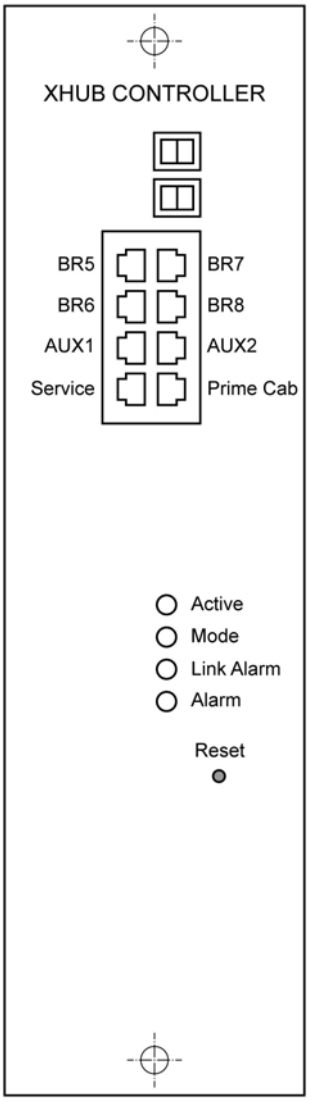

This section contains following topics:

- *XHUB Controller – Front Panel Indicators (LED) on page 282*
- *XHUB Controller – Front Panel Switches on page 284*
- *XHUB Controller – Front Panel Connectors on page 284*

XHUB Controller – Front Panel Indicators (LED)

The following table lists the Front Panel LEDs.

Table 81: XHUB Controller – Front Panel Indicators (LED)

LED	LED/Port Name	Position	Controlled By	Indication
LED1	Active	Front Panel	SW	GREEN: XHUB is Active and in Normal mode

Table continued…

LED	LED/Port Name	Position	Controlled By	Indication
				OFF: XHUB in Standby or Stand-alone/Impaired Normal mode
LED2	Mode	Front Panel	HW	GREEN: Normal or Impaired Normal Mode OFF: Standalone mode
LED3	Link Alarm	Front Panel	HW	GREEN: Impaired Normal or Stand-alone mode OFF: Normal mode
LED4	Alarm	Front Panel	SW	RED: If Alarms (Problem or Failure) in Normal mode or Unknown XHUB state FLASH: Impaired Normal mode
LED5	BR5	Port 1 LED1	HW, Enet switch	OFF: Ethernet link not present GREEN: Ethernet link present
LED6		Port 1 LED2	HW, Enet switch	OFF: Ethernet activity not present YELLOW: Ethernet activity present
LED7	BR6	Port 2 LED1	HW, Enet switch	OFF: Ethernet link not present GREEN: Ethernet link present
LED8		Port 2 LED2	HW, Enet switch	OFF: Ethernet activity not present YELLOW: Ethernet activity present
LED9	BR7	Port 3 LED1	HW, Enet switch	OFF: Ethernet link not present GREEN: Ethernet link present
LED10		Port 3 LED2	HW, Enet switch	OFF: Ethernet activity not present YELLOW: Ethernet activity present
LED11	BR8	Port 4 LED1	HW, Enet switch	OFF: Ethernet link not present GREEN: Ethernet link present
LED12		Port 4 LED2	HW, Enet switch	OFF: Ethernet activity not present YELLOW: Ethernet activity present
LED13	Service	Port 5 LED1	HW, Enet switch	OFF: Ethernet link not present GREEN: Ethernet link present
LED14		Port 5 LED2	HW, Enet switch	OFF: Ethernet activity not present YELLOW: Ethernet activity present
LED15	AUX1	Port 6 LED1	HW, Enet switch	OFF: Ethernet link not present GREEN: Ethernet link present
LED16		Port 6 LED2	HW, Enet switch	OFF: Ethernet link not present GREEN: Ethernet link present
LED17	AUX2	Port 7 LED1	HW, Enet switch	OFF: Ethernet link not present GREEN: Ethernet link present
LED18		Port 7 LED2	HW, Enet switch	OFF: Ethernet link not present GREEN: Ethernet link present

Table continued…

LED	LED/Port Name	Position	Controlled By	Indication
LED19	Prime Cab	Port 8 LED1		OFF: Ethernet link not present GREEN: Ethernet link present
		Port 8 LED2		OFF: Ethernet activity not present YELLOW: Ethernet activity present

XHUB Controller – Front Panel Switches

The following table lists the Front Panel switches of the XHUB Controller and their functions.

Table 82: XHUB Controller – Front Panel Switches

Switch Name	Switch Function
Reset	The front-panel switch can be used to initiate a Hard Reset of the XHUB Controller. Push and hold (>3 seconds) for Hard Reset.

XHUB Controller – Front Panel Connectors

The following table lists the front panel connectors of the XHUB controller.

Table 83: XHUB Controller – Front Panel Connectors

Connector Name	Connector Type	To/From	Comment
Power	MOLEX (2 Pin)	PSU	28.5 V DC
BR	RJ45	BR	Ethernet
AUX1	RJ45	BR or Ethernet Sitelink	Used in E-Tetra configurations or Ethernet Sitelink
AUX2	RJ45	BR	Used in E-Tetra configurations
Service	RJ45	Service Terminal	Provides service access
Prime Cab	RJ45	SC (in Prime Cab)	

XHUB Controller – Rear Panel

This section provides information about Rear Panel connectors of the XHUB Controller.

XHUB Controller – Rear Panel Connectors

The following table lists the rear panel connectors of the XHUB controller.

Table 84: XHUB Controller – Rear Panel Connectors

Connector Name	Connector Type	To/From	Comment
Alarms/Control	IDE 34-pin	Cabinet door sensor	Provide Alarm

Replacing the XHUB Controller

Warning: See *Static Precautions and ESD Strap on page 419* before proceeding with replacement process.

Procedure:

1 Disconnect the power cables to the MTS Power Supply Units.

Warning: Shock Hazard. The MTS contains dangerous voltages, which can cause electrical shock or damage to equipment. Turn off the MTS and remove the power cabling before servicing this equipment. Make sure all power is off to prevent accidental contact with high energy and injury to personnel.

2 Wear an ESD strap and connect its cable to a verified good ground. This strap must be worn to prevent ESD damage to any components.

3 Tag and disconnect all other cabling from the XHUB Controller.

4 Loosen the two M4X10 captive screws securing the XHUB Controller to the chassis.

5 Use handle, and gently slide the XHUB Controller from the slot, removing it from the chassis.

Important: There are cables connected at rear of the XHUB. Slide out the XHUB carefully, tag and disconnect ribbon cables at the rear.

6 Install the replacement XHUB Controller. Use handle to slide the unit into the chassis.

Important: Connect the ribbon cables at the rear before sliding the unit in to the chassis.

7 Secure the XHUB Controller in the chassis with the captive screws.

8 Reconnect all other cabling to the unit as tagged during the removal except the power cables.

9 Reconnect the power cables to the MTS Power Supply Units.

XHUB Controller – FRU

Table 85: XHUB Controller - FRU

Kit Number	Description
GMLN4689A	XHUB MTS-EXP Controller

See *Planned Maintenance Inspection (PMI) on page 417* for list of Periodic Maintenance Inspections.

Chapter 10

Base Radio

This chapter covers the following topics:

- *Base Radio – Overview on page 287*
- *Base Radio – Theory of Operation on page 288*
- *Base Radio – Indicators and Connectors on page 291*
- *Replacing the Base Radio on page 293*

Base Radio – Overview

Figure 175: Base Radio

The Base Radio provides reliable digital radio capabilities in a compact software-controlled design. High channel capacity is provided through voice compression techniques and Time Division Multiplexing (TDM).

On the Base Radio front panel there are connectors and indicators. The indicators provide a means for monitoring various status and operating conditions of the Base Radio, and also aid in isolating failures. For more information on Base Radio indicators and connectors, see *Base Radio – Indicators and Connectors on page 291* in this chapter.

Base Radio – Theory of Operation

The Base Radio (BR) provides reliable digital communications capabilities. Each Base Radio contains the following subcomponents:

- Transceiver consisting of a Base Radio Controller, a triple receiver, and an exciter
- Power Amplifier (PA)

In the MTS 2 and 4, the Base Radio (BR) operates in conjunction with the Site Controller (SC) through a properly terminated 100Base-T Ethernet link.

Figure 176: Base Radio Front Panel

On the front panel, there is a DC power input, three parallel receiver (RX) inputs, a high power transmitter output signal from the power amplifier, a service port, two interfaces to the Site Controllers, and LED indicators. For more information on the LED indicators, see *Table 86: Base Radio – LED Indicators on page 291*.

The following figure shows an overall block diagram of the Base Radio.

Figure 177: Base Radio – Functional Block Diagram

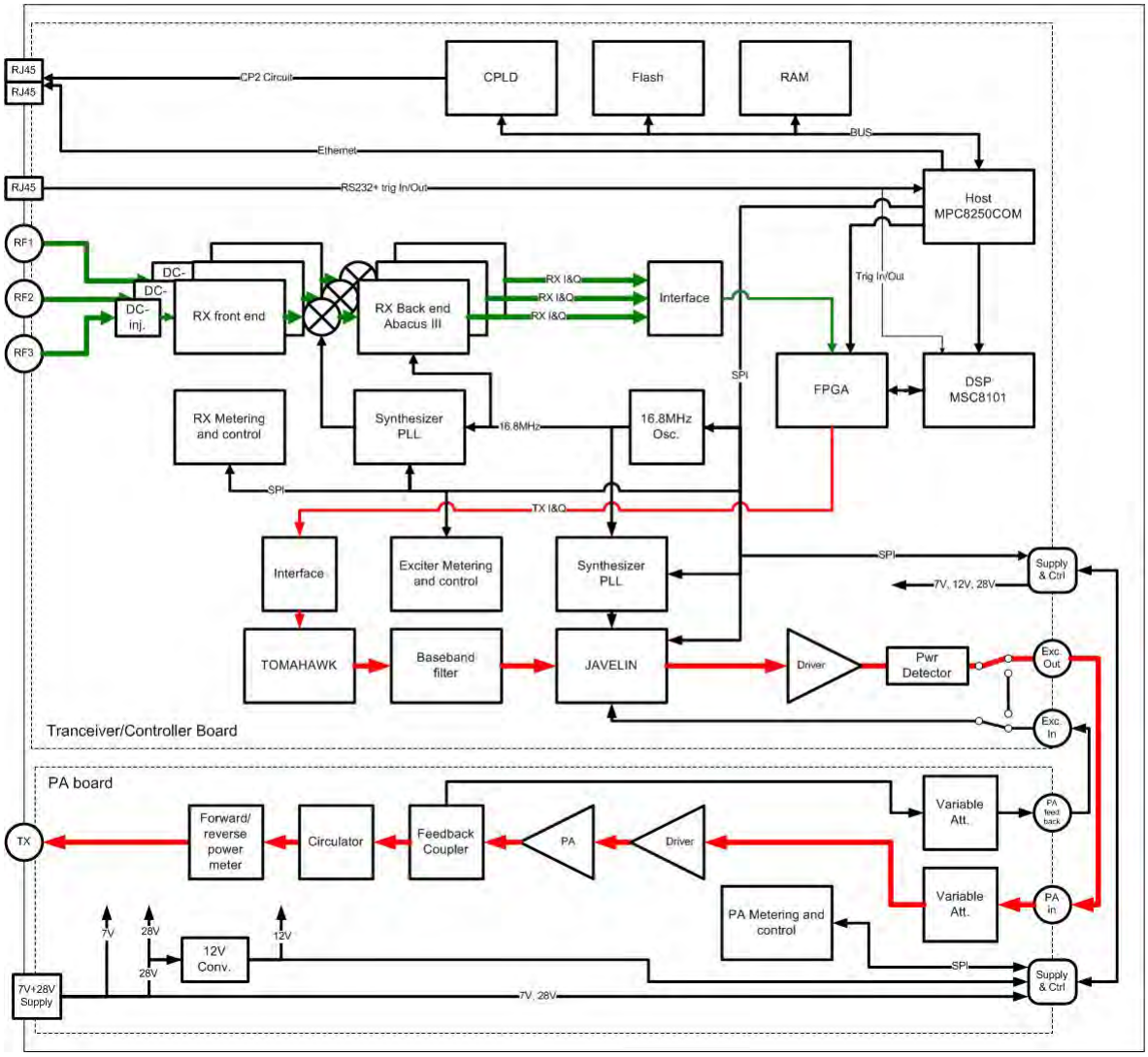

Upon the power-up, BRC bootloader begins to download application code from SC over the Ethernet LAN. After successful download, the code is executed. Once the BRC application is started, it gets configuration parameters from SC. The configured BRC application allows the Base Radio to perform call processing functions.

Should any alarm conditions arise during BRC application, operation, they are reported to SC over Ethernet LAN. Alarm conditions may also be verified locally through the Service Access port linked to a service computer using the `get alarms` MMI command.

The Base Radio operates in a TDMA (Time Division Multiple Access) mode. This mode, combined with voice compression techniques, provides an increased channel capacity ratio of as much as 4 to 1. Both the receive and transmit signals of the Base Radio are divided into four individual timeslots. Each receive slot has a corresponding transmit slot; this pair of slots comprises a logical RF channel.

The Base Radio uses single, dual, and triple diversity reception for increased talkback coverage area and improved quality. The Transceiver contains a three-branch receiver section in which all receivers are used for triple diversity reception.

All receivers within a given Base Radio are programmed to the same receive frequency. The signals from each receiver are fed to the BRC where a diversity combining algorithm is performed on the signals. The resultant signal is processed for error correction and then sent to the Site Controller through the Ethernet LAN with the appropriate control information regarding its destination.

The transmit section of the Base Radio is comprised of the Exciter (EXC) and Power Amplifier (PA). The EXC processes the information to transmit from the BRC in the proper modulation format. This low-level signal is sent to the Power Amplifier where it is amplified to the desired output power level. The PA is a continuous-keyed linear amplifier. A power control routine monitors the output power of the Base Radio and adjusts it as necessary to maintain the proper output level.

For information on the performance specifications, see *Technical Specifications on page 357*.

Note: The Base Radio is prepared for TEDS.

Transceiver (XCVR)

The transceiver provides the receive, transmit, and control functions for the Base Radio. The transceiver consists of three elements:

- Receiver-performs the receive function
- Exciter-performs the transmit function
- BR Controller-performs the control function

The receiver incorporates three separate receiver channels for use in diversity reception. The bias for the LNAs in the Preselectors is supplied by bias circuitry in the receiver. A +7 V dc voltage is the output on the QMA receive input connectors.

The receiver performs highly selective bandpass filtering and dual down conversion of the station receive RF signal. A custom receiver IC outputs the baseband information in a digital data format and sends it to the Base Radio controller.

The exciter in conjunction with the Power Amplifier (PA), provides the modulation and transmitter functions for the Base Radio.

The transceiver contains the Base Radio Controller (BRC). The BRC serves as the main controller of the Base Radio. The BRC provides signal processing and operational control for the other Base Radio circuit blocks.

The operating software and configuration data are contained within the BRC flash memory. The software defines operating parameters for the BR, such as output power and operating frequency.

Note: To protect the key encryption key in use in the infrastructure, it is recommended that this key is overwritten using the Key Variable Loader (KVL) device (through the front serial port) before shipping for repair.

Important: To avoid the risk of causing a high bit error rate to occur, do not use 385.572MHz and 419.175MHz as receiving frequencies in the Base Radios of the MTS.

Power Amplifier

The Power Amplifier (PA) in conjunction with the exciter provides the transmitter functions for the Base Radio. The Power Amplifier accepts the low-power modulated RF signal from the exciter and amplifies the signal for transmission through the RF output connector.

For 400 MHz, three possible PAs are available, two high-power PAs and a low-power PA. High-power PAs are available on two frequency bands:

- 350 MHz – 379 MHz
- 380 MHz – 470 MHz

For 400 MHz low-power PAs, the frequency band is 380 MHz – 470 MHz.

For the 260 MHz band, one low-power PA is available. The frequency band is 260 MHz– 275 MHz.

For the 800 MHz band, one high-power PA is available. The frequency band is 806 MHz – 870 MHz.

For the 900 MHz band, one high-power PA is available. The frequency band is 932 MHz – 942 MHz.

Figure 178: Low-power PA Functional Block Diagram

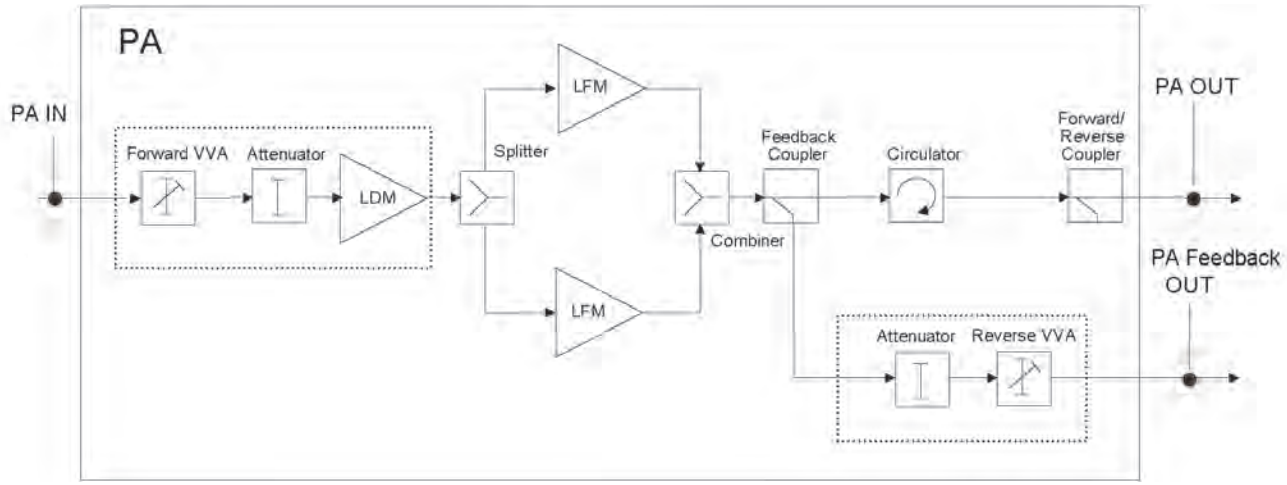

Figure 179: High-power PA Functional Block Diagram

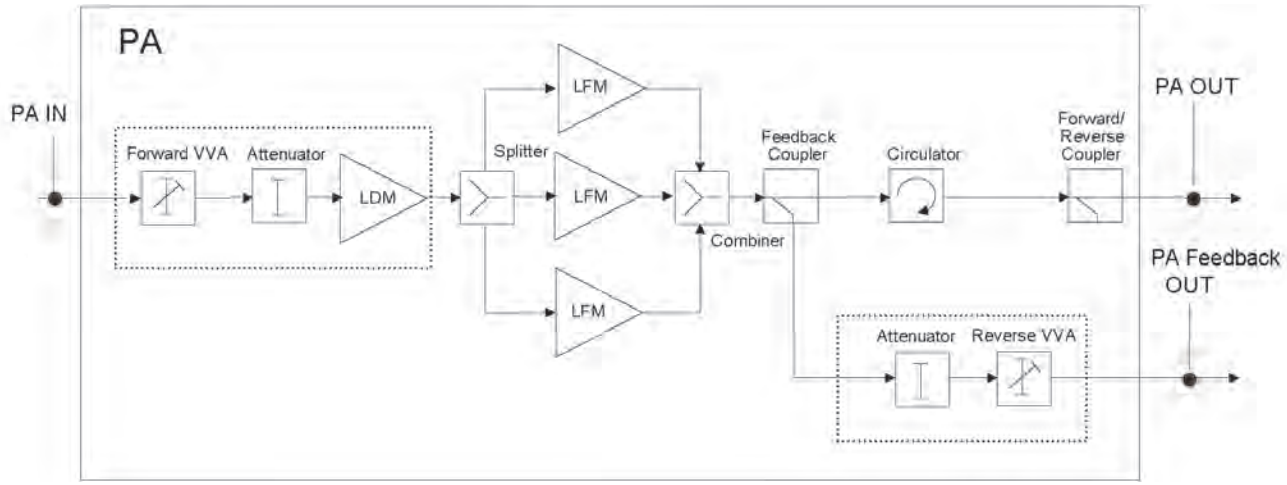

Base Radio – Indicators and Connectors

Table 86: Base Radio – LED Indicators

#	LED/Port name	Type	Controlled by	Indication
LED 1	Tx	Red/Green	SW	BR keying: • OFF: BR is not keyed

Table continued…

#	LED/Port name	Type	Controlled by	Indication
				• AMBER: BR is keyed without service • GREEN: BR is keyed
LED 2	Aux	Red/Green	SW	• OFF: No alarms • AMBER: not used • RED: not used
LED 3	Status	Red/Green	SW Red LED will turn on before SW change any indication	BR status: • OFF: Status unknown, power off • GREEN: BRC main application is running • AMBER: Waiting for SWDL this is where the BR will wait if no Site Controller is present • RED: SW not started, power on
LED 4	BR Alarm	Red/Green	SW	• OFF: No alarms • AMBER: BR minor alarm: PA, Exciter, RX, BRC Reduced performance • RED: BR failed: PA, Exciter, RX, BRC
LED5	SC 1	Green	HW, Enet IC	• OFF: Ethernet link not present • GREEN: Ethernet link present
LED6	SC 1	Yellow	HW, Enet IC	• OFF: Ethernet activity not present • YELLOW: Ethernet activity present
LED7	SC 2	Green	HW, Enet IC	• OFF: Ethernet link not present • GREEN: Ethernet link present
LED8	SC 2	Yellow	HW, Enet IC	• OFF: Ethernet activity not present • YELLOW: Ethernet activity present

Table 87: Base Radio – Connectors

Name of Connector	Type	To/From	Comment
SC1	RJ45	Site Controller	Ethernet/CP2 interface
SC2	RJ45	Site Controller	Ethernet/CP2 interface
Service	RJ45	BRC	Provides service access. See *Table 88: Base Radio – Service Cable Pinouts on page 293* for service cable pinout information.
RX1	QMA	Preselector/ Duplexer	RF RX signal and +7 V dcl

Table continued…

Name of Connector	Type		To/From	Comment
RX2	QMA		Preselector/ Duplexer	RF RX signal and +7 V dc
RX3	QMA		Preselector/ Duplexer	RF RX signal and +7 V dc
Tx	QMA		Hybrid Combiner/ Cavity Combiner	RF TX signal
Power	MOLEX		Power Supply Unit	
	Pin 1 - 3	GND		
	Pin 4	+7 V		
	Pin 6 - 7	+28.5 V		
	Pin 5, 8 - 14	not used		

Table 88: Base Radio – Service Cable Pinouts

RJ45 PIN	D-SUB 9 FEMALE PIN	Description
1		
2		
3		
4	3	Rx
5	5	GND
6		
7	2	Tx
8	5	GND
9		

Replacing the Base Radio

For a list of available Field Replaceable Units (FRUs), see *Field Replaceable Units (FRUs) on page 405*.

Process:

1. Remove the Base Radio module, see *Removing the Base Radio on page 294*.
2. Reinstall the new Base Radio, see *Reinstalling the Base Radio on page 294*.
3. Perform the procedures from the *Configuring and Verifying the Base Radio on page 213* section.
4. If Encryption and/or Authentication is used, see *MTS LiTE, MTS 2, and MTS 4 Restoration* manual (for DIPS/ DIPC systems) or *Service Manual* (DIPM system) for details on loading Ki's into MTS.

Electrostatic Discharge Precaution

The Base Radio circuitry contains many CMOS and other electrostatic discharge sensitive devices. Take precautionary measures to prevent damage of Base Radio modules by static discharge when servicing the equipment.

Observe the following additional precautions:

- Wear a wrist strap (Motorola Part No. 4280385A59 or equivalent) at all times when servicing the Base Radio to minimize static build up.
- A jack is provided at top left of module cage marked with the ground symbol.
- Keep spare modules in factory packaging for transporting. When shipping modules, always pack in original packaging.

For more information, see *Static Precautions and ESD Strap on page 419*.

Restoring the Base Radio

Process:

1. Remove the Base Radio.

   See *Removing the Base Radio on page 294*.
2. Reinstall the Base Radio.

   See *Reinstalling the Base Radio on page 294*.

Removing the Base Radio

Procedure:

1. Remove power from the MTS by switching off the Power Supply Unit.

   Note: To perform a hotswap of a Base Radio, do not turn off the Power Supply. Connect a terminal to the Service Port and log in. Make sure the Base Radio is not transmitting by entering the MMI command:

   - From the Call Application use: `dekey`
   - From the Test Application use: `power -otxch1 -a0.0`

   For more information on this command, see *MMI Commands Manual*.
2. Unplug the cables at front of the Base Radio.
3. Remove the TORX screws securing the faulty module to the chassis; these are located on the top and bottom of the front plate of the faulty module. Save the screws for reuse.
4. Pull out the module.

   Caution: The module can be very hot.

Reinstalling the Base Radio

Procedure:

1. Insert the replacement Base Radio by aligning the side rails with the appropriate rail guides inside the Base Radio chassis.
2. Gently push the replacement module completely into the Base Radio chassis assembly using the module handle(s).
3. Secure the replacement module using two TORX screws removed during module removal. Tighten the screws to a torque of 2.7 Nm.
4. Reconnect the cables to the BR front plate.
5. Switch on the Power Supply Unit.

   Note: Do not perform this step when doing a hotswap.

Chapter 11

Power Supply Unit

The following figure shows the front of the Power Supply Unit (PSU).

Figure 180: Power Supply Unit Front Panel

Power Supply Unit (PSU) – Theory of Operation

Dependent on its configuration the MTS is equipped with one or two high efficiency switch mode Power Supply Units (PSU). The PSU has a nominal AC input of 100VAC/240VAC (45-66 Hz) as well as a DC input of 48VDC.

The PSU:

- has the capability to charge a 48V backup battery during AC operation mod.
- provides several DC output voltages to supply Base Radios, Site Controller, ATCC and Fans
- complies with the appropriate CE marking, EMC, EMI and safety requirements.

There is an ON/OFF switch on the front panel of the PSU module which connects/disconnects DC output voltages.

The PSU operates in the following modes:

- DC only operation at -48VDC (within -41VDC to -60VDC).

Note: DC operation mode does not allow any battery controlling.

- AC only operation at 100/240VAC (within 90 VAC to 264 VAC;) without battery charging.
- AC operation (within 90 VAC to 264 VAC;) and automatic switch over to DC backup battery operation when AC fails.

Warning: Input Reverse Voltage Protection: The PSU is protected from damage due to a reverse polarity input connection. If the input polarity is reversed, the DC In Status LED will be solid red.

The MTS cabinet itself is wired to positive ground earth. The Power Supply Unit has a floating DC ground concept.

For more information on PSU technical specifications, see *Power Supply Unit Specifications on page 369*.

PSU CAN Bus Monitoring, Alarms, and Controls

The PSU is monitored and controlled by the Site Controller. All monitoring outputs, alarm outputs, PSU ID number and control inputs are available through a CAN Bus. It is also possible to update the PSU firmware through the CAN Bus while the PSU is operational.

A unique identification of up to 4 PSUs is achieved by means of software. The assigned ID is used to identify the PSU on the CAN Bus for commands and alarms. For more information on CAN Bus, see *Site Controller on page 263*.

PSU monitoring parameters that can be measured through the CAN Bus:

- PSU temperature: -30 °C to +100 °C, tolerance: ±2 °C.
- Battery current: -20 A to +10 A, tolerance: ±1%.
- Battery voltage: 30 V to 60 V, tolerance: ±1%.
- Battery temperature: -30 °C to +100 °C, tolerance: ±2 °C.
- 7 V output voltage: 0 V to 10 V, tolerance: ±2%.
- 7 V output current: 0 A to 10 A, tolerance: ±2%.
- 28.5 V output voltage: 0 V to 30 V, tolerance: ±2%.
- 28.5 V output current: 0 A to 10 A, tolerance: ±2%.
- PSU output power: 0 W to 1100 W, tolerance: ±2%.
- Fan output voltage: 0 V to 30 V, tolerance: ±2%.
- PSU input air temp.: -30 °C to +100 °C, tolerance: ±2 °C.

PSU alarms available through CAN Bus:

- DC Source Fail: Indicating DC input voltage outside limits (below 43 V).
- DC Out Fail: DC output voltages out of limits.
- AC Source Fail: Early warning, indicating that the AC input is interrupted and the PSU starts to operate from DC input source in 15 ms. (if a backup source is present).
- Software Fail: Indicating software is corrupted or unable to initialize.
- Over Temperature: Indicating over temperature detected 5 °C to 10 °C before shutdown.
- Fan 1 alarm: Fan 1 not operating (fan has stopped or its running speed is below specification), PSU has received a high signal (open collector) from fan tray 1 through fan connector 1.
- Fan 2 alarm: Fan 2 not operating (fan has stopped or its running speed is below specification), PSU has received a high signal (open collector) from fan tray 2 through fan connector 2.

- Fan 3 alarm: Fan 3 not operating (fan has stopped or its running speed is below specification), PSU has received a high signal (open collector) from fan tray 3 through fan connector 3.

PSU Controls available through CAN Bus:

- FORCE DC: Controls the PSU to force the usage of the DC input if usable, disregard presence of AC. If DC is outside the usable range for the PSU, the PSU shall indicate an alarm using the DC-fail output. If DC input voltage comes below 43 V ±2% and if AC is usable the PSU shall take the input power from AC, disregarding a Force-DC control input.

  Note: Force DC operation on a bad DC supply PSU or Battery: Bad DC supply is defined as a DC source where the voltage drops below 43 V for a few milliseconds when the PSU is forced to operate on DC. In case of a force DC command and bad DC supply the 28.5 V output voltage is allowed to drop down to 27 V for a maximum of 5 second, while the PSU automatically switches back to AC mode and the 28.5 V rises from 27 V to 28.5 V. During this sequence the DC out alarm is suppressed.

- Fan supply output voltage is also controlled by the CAN Bus in 5 steps from 24 V to 12 V. The highest value is set by CAN Bus or automatically.
- DC operation only: Prevents AC fail alarms (and associated LED) from the PSU on CAN Bus when the PSU is supplied from DC only. If the AC supply becomes present during DC operation, the AC Source Fail alarm circuit is automatically be reactivated.
- AC operation only: Prevents DC fail alarms (and associated LED) from the PSU on CAN Bus when the PSU is supplied from AC only. If the DC supply becomes present during AC operation, the DC-Fail alarm circuit is automatically reactivated.
- No Fan 1: Prevents Fan 1 alarm (and associated LED) when no fan 1 is connected. If the Fan1 becomes present during operation, the Fan1 alarm circuit is automatically reactivated.
- No Fan 2: Prevents Fan 2 alarm (and associated LED) when no fan 2 is connected. If the Fan2 becomes present during operation, the Fan2 alarm circuit is automatically reactivated.
- No Fan 3: Prevents Fan 3 alarm (and associated LED) when no fan 3 is connected. If the Fan3 becomes present during operation, the Fan3 alarm circuit is automatically reactivated.
- Fan Factor: Fan factor is used to determine automatically calculated Fan supply voltage - the higher factor is specified the higher voltage is calculated. The Fan Factor range is 0.5 - 2.0 (by default 1.0). In systems with only one BR this factor is typically set to 1.0.

See the *MMI Commands* manual for additional information on commands and parameters.

Backup Battery

The Power Supply Unit (PSU) handles the automatic switchover to a backup battery in the event of AC power supply failure. The MTS charges a backup battery during normal AC operation. The backup battery normally is located near to the cabinet.

This battery is connected to the DC connector on the front panel of the PSU through Junction Panel. Refer to *Hardware Installation on page 75* and *Interconnection and Internal Cabling on page 135* for more information.

Note: The recommended batteries to be used are a Valve Regulated Lead Acid (VRLA) recombination type, with -48 VDC nominal. Such as Enersys Power safe VFT type.

Backup Battery Charging Procedure

Note: Selected Operation Mode: AC Operation

The backup battery charging output voltage is 40.5VDC to 57VDC and output current 0 to 6A.

A temperature sensor monitors the backup battery temperature to ensure optimum charging.

Available charge current is reduced linearly with increasing temperature from 6A to 0A when the PSU input air temperature increases from +30 °C to +60 °C

Charge voltage decreases with increasing battery temperature with the ratio of -72mV/C, starting with 56.88VDC +/-1% at -10 °C and ending with 52.56 VDC +/-1% at +50 °C

The PSU charges the backup batteries on the following conditions (**DC In Status** LED is flashing fast (0.5 s) red-green):

- Temperature range*:-10 °C to +50 °C
- Battery Low Voltage start up:40V -5%/+1%
- Battery Low Voltage Warning:43V ±2%

The PSU stops charging the backup battery on the following conditions:

- Internal PSU temperature:> 100 °C
- Battery Temperature*: -12.5 °C
- Battery Temperature*:> 53 °C

*When a temperature sensor is connected to the battery and PSU. If the battery sensor is not connected the battery will be charged with 54.24 ±1%VDC as if the battery temperature was 25 °C. The battery temperature monitored through CAN Bus will show 100 °C.

Fans

The PSU supplies fans, which are located in the fan trays under the module cage. For more information on fans, see *Cooling Fans on page 305*. The PSU DC output voltage dedicated for fans is 12 to 24VDC and the output current is 1 A for each fan.

Three fan output connectors supply three fan trays with two fans connected in parallel in each fan tray.

Fan supply output voltage can be automatically regulated as a function of PSU internal (ambient) temperature and its output power. Fan supply output voltage can also be controlled by the CAN Bus in 7 steps from 24V to 12V. The highest value wins – automatic control versus CAN control.

At an ambient temperature below -10 °C the fans are stopped and restarted again at -8 °C. The fan supply ramps up to 24V output for a few seconds in all start up situations.

Power Supply Unit (PSU) Indicators, Switches, and Connectors

The following figure shows the positions of indicators, switches and connectors on the PSU front panel.

Figure 181: PSU Front Panel

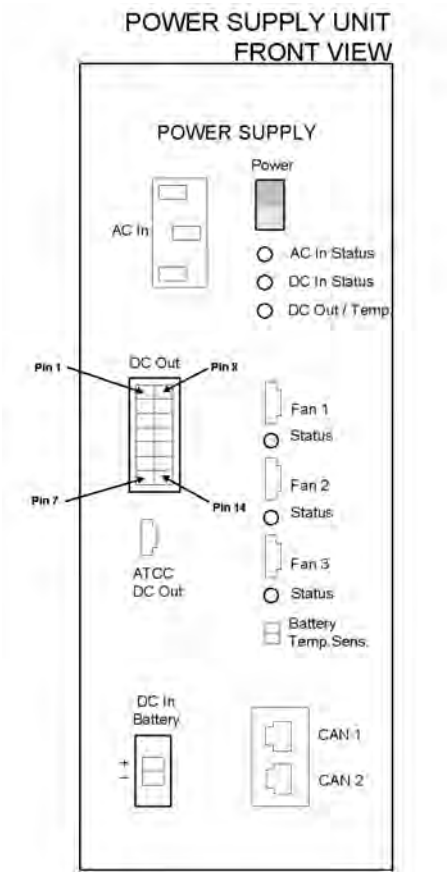

PSU LED Indicators

The following table lists and describes the PSU LED indicators and *Figure 181: PSU Front Panel on page 299* shows their position.

Table 89: Power Supply Unit LED Indicators

LED Name	Color	Condition	Indications
AC In Status (AC input indicator)	dual color: LED green/red	AC input voltage is present and within limits	Green - solid
		AC input voltage is not present or below limits	Red - solid
		DC operations only mode	LED off or Green – solid
DC In Status (DC input and charging indicator)	dual color LED: green/red	PSU is supplied from DC input	Green - solid
		battery is being charged	Green/red flashing fast (2Hz)
		backup battery or a DC source supplies the PSU	Green/red flashing slow (0.5Hz), shifting between red and green

Table continued…

LED Name	Color	Condition	Indications
		and the source voltage drops below 43VDC ±3%	
		No source connected to DC input or the DC voltage is below 40,5V	Red - solid
		AC operations only mode	LED off or Green – solid
DC Out / Temp. (DC output and temperature indicator)	dual color LED: green/red	DC output voltages are present and within limits	Green - solid
		One or more of the output voltages failed	Red - solid
		Over temperature is detected, 5 -10 C before shutdown	Red - flashes
		PSU is in standby mode	LED off
Fan # Status (Fan indicator # (near fan connector #))	dual color LED: green/red	Fan # programmed to operate and Fan # connected, operating and fan failure signal is high	Green - solid
		Fan # connected but programmed not to operate or Fan # voltage is out of limits or the fan failure signal is low	Red - solid
		Fan # not connected and programmed not to operate	No light
		Fan # not connected, at start up, but should have been as per CAN command	Red - flashing
LED indication in boot mode (firmware update through CAN)			
Upper 3 LEDs (AC In Status, DC In Status and DC Out/ Temp.)	3 dual color LEDs: green/red	only boot loader is running (meaning that the boot loader waits for an .exe file)	3 LEDs blinking together: R (red) R R -> G (green) G G, with 1 Hz frequency
		boot loader is loading a new hex file: (loading status)	R R G -> R G R-> G R R->... (circulating green LED)
Fan indicators 1 to 3		always	Red - solid

PSU Switch

Table 90: Power Supply Unit Controls on page 301 describes the PSU switch and *Figure 181: PSU Front Panel on page 299* shows its position.

Table 90: Power Supply Unit Controls

Control	Description
ON/OFF Switch	This switch disconnects DC outputs and charging currents.

Note:

When the power switch is turned off the PSU still consumes 2 mA.

If left connected to the battery for a very long time with no mains power, it could discharge the battery.

PSU Connectors

Table 91: Power Supply Unit Connectors on page 301 lists and describes the PSU connectors and *Figure 181: PSU Front Panel on page 299* shows their position. For more information on PSU cabling, see *Interconnection and Internal Cabling on page 135*.

Table 91: Power Supply Unit Connectors

Name of Connector	Type		To/From	Comment
CAN1	RJ45		Site Controller	CAN Bus interface
CAN2	RJ45		Duplexer/ Post Filter/ ATCC/ Site Controller/ Terminator	CAN Bus interface
DC In Battery	Phoenix (2 pin)		Junction Panel	DC input and backup battery charging
AC In	IEC (high temperature version, male)		Junction Panel	AC input
Battery Temp. Sens.	MOLEX (2 pin)		Junction Panel	Connection with the backup battery temperature sensor
ATCC Out	MOLEX (2 pin)		ATCC	DC power supply for ATCC
DC Out	MOLEX (14 pin)		2 Base Radios and Site Controller	DC power supply
	Pin 1 - 3	GND	Base Radio	
	Pin 8	+7 V		
	Pin 10 - 11	+28.5 V		
	Pin 4 - 6	GND	Base Radio	
	Pin 9	+7 V		
	Pin 12 - 13	+28.5 V		
	Pin 7	GND	Site Controller	
	Pin 14	+28.5 V		
Fan 1	MOLEX (4 pin, male)		Fan 1	DC supply for Fan 1
	Pin 1	+Vfan		

Table continued…

Name of Connector	Type		To/From	Comment
	Pin 1	-Vfan		
	Pin 1	-Vfan		
	Pin 1	Alarm		
Fan 2	MOLEX (4 pin, male)		Fan 2	DC supply for Fan 2
	Pin 1	+Vfan		
	Pin 1	-Vfan		
	Pin 1	-Vfan		
	Pin 1	Alarm		
Fan 3	MOLEX (4 pin, male)		Fan 3	DC supply for Fan 3
	Pin 1	+Vfan		
	Pin 1	-Vfan		
	Pin 1	-Vfan		
	Pin 1	Alarm		

Replacing the Power Supply Unit (PSU)

See the PSU power up sequence in *Powering Up the MTS on page 127*.

For a list of available FRUs, see *Field Replaceable Units (FRUs) on page 405*.

Process:

1. Remove the PSU, see *Removing the Power Supply Unit (PSU) on page 302*.
2. Install the Power Supply Unit into the cabinet, see *Installing the Power Supply Unit (PSU) on page 302*.
3. Update the mapping list with the new unit TrackID, see *Updating the Mapping List with the New PSU TrackID on page 303*.

Removing the Power Supply Unit (PSU)

Procedure:

1. Switch OFF the Power Supply Unit.

   Warning: Make sure that the facility power outlet is off to prevent accidental contact with high energy and injury to personnel.

2. Remove all cables.
3. Remove two M4x10 Torx 20 screws which secure the PSU front panel to the module cage. Save screws and washers for reuse. The washers are required in *Installing the Power Supply Unit (PSU) on page 302*, *step 2*.
4. Pull out the Power Supply Unit from the module cage.

Installing the Power Supply Unit (PSU)

Procedure:

1. Place the Power Supply Unit on the slide rails in the module cage and push it to the back.
2. Secure the Power Supply Unit to the module cage with the two M4x10 Torx 20 screws.

3 Connect the power supply cables and optional backup battery cables (AC in, DC in / battery).
4 Connect remaining cables according to labels attached before PSU removal.
5 Switch ON the Power Supply Unit.
6 Check the LED indicators to verify the PSU is operating correctly. See *MTS LiTE, MTS 2 and MTS 4 Installation, Configuration and Basic Service Manual*.

Updating the Mapping List with the New PSU TrackID

Procedure:

1 Log on to the Site Controller.
2 Use the following MMI command to view the mapping list: `can check_mapping`.
Step example:

```
SC> can check_mapping
Units are present:
Device Track ID
DPM 1 JTH0500101
DPM 2 JTH0500105
Units are not present:
PSU 1 JTH0500200
Track ID not mapped:
JTH0500102
```

3 On the list, locate the unit that you have removed and that is indicated as `Units are not present`.
4 Delete old CAN Bus unit from the CAN Bus unit mapping list. Use `can remove_mapping` ***<Device>***, where ***<Device>*** is the old unit name.
Step example:

```
SC> can remove_mapping psu 1
```

5 Add new CAN Bus unit to the CAN Bus unit mapping list.

Note: The new unit Track ID is present on the replaced unit label and indicated as `Track ID not mapped` in the list shown in *step 2*.

Use `can add_mapping` ***<Device><TrackID>***, where ***<TrackID>*** is a Track ID of the new unit and ***<Device>*** is the new unit name: psu X, where X denotes a digit between 0 and 2.

Step example:

```
SC> can add_mapping psu 1 JTH0500102
```

6 View the updated mapping list using the `can check_mapping` command and check that there are no units labeled as `Track ID not mapped` or `Units are not present`.

Chapter 12

Cooling Fans

One or more fan modules generate an airflow to manage the temperature within the MTS cabinets.

Cooling Fans Overview

Each fan module consists of two fans. A sensor monitors the fans revolution and in the event of failure, an alarm is generated.

Note: Low power configurations of MTS LiTE and MTS 2 can optionally operate with cooling fans.

Figure 182: MTS Fan Kit

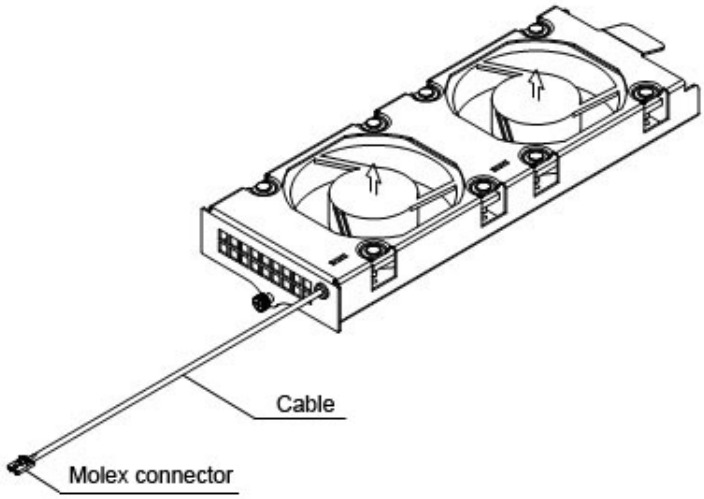

Cooling Fans Theory of Operation

The MTS card cage contains fan kits which reside below the modules. The PSU supplies and controls the three fan kits speed (max two for MTS LiTE) to reduce the noise in normal temperature environments. The fan speed is based on the temperature of the modules. The latter require that the Site Controller software monitors the module temperatures and controls the fans speed through the CAN Bus.

MTS LiTE and MTS 2 offer configurations which do not need fans. The temperature range is from -30 °C to 55 °C. If the temperature range is extended to 60 °C, two fan kits for MTS LiTE or three fan kits for MTS 2 need to be

mounted. MTS 4 requires fans for all configurations. There is no need for the fans in MTS 2 for the low power PA BTS configurations. In other configurations, three fan kits are needed at the bottom of the card cages. There may be a reliability issue with the fans if operated below -10 °C. At an ambient temperature below -10 °C, the fans are stopped and restarted again at -8 °C. The fan supply ramps up to 24 V output for a few seconds in all start up situations.

PSU Fan Control

The Power Supply Unit (PSU) contains three fan supply outputs with LED indicators.

Three fan connector outputs supply three fan kits with two fans connected in parallel in each fan tray.

The FAN output specifications are:

- Output Voltage: from 12 to 24 VDC ± 5 %
- Output Current: 1 A for each fan connector output

The fans supply output voltage is linear dependent on the total power delivered by the PSU and the ambient temperature. The fan supply starts with 24 V output for a few seconds.

For PSU LED indications, see *PSU LED Indicators on page 299*.

There are several MMI commands which control the fans:

- `psu` ***<PSU number>*** `get fan_voltage`
- `psu` ***<PSU number>*** `set fan_speed`
- `psu` ***<PSU number>*** `get fan_speed`
- `psu` ***<PSU number>*** `set fan_config`
- `psu` ***<PSU number>*** `get fan_config`
- `psu` ***<PSU number>*** `start_fan`

For description of the PSU fan commands, see the *MTS Man Machine Interface Commands* manual.

Alarms and Controls Available Through PSU CAN Bus Interface

The fan alarms available through the CAN Bus:

Fan 1 alarm

Fan 1 not operating, PSU received a High signal (open collector) from fan tray 1 through fan connector 1.

Fan 2 alarm

Fan 2 not operating, PSU received a high signal (open collector) from fan tray 2 through fan connector 2.

Fan 3 alarm

Fan 3 not operating, PSU received a high signal (open collector) from fan tray 3 through fan connector 3.

The fans controls available through the CAN Bus:

No Fan 1

Prevents Fan 1 alarm (and associated LED) when no fan 1 is configured.

No Fan 2

Prevents Fan 2 alarm (and associated LED) when no fan 2 is configured.

No Fan 3

Prevents Fan 3 alarm (and associated LED) when no fan 3 is configured.

Airflow

MTS LiTE:

The card cage has a clear opening in the bottom front and small holes in the side and back. Ambient airflow enters at the bottom of the front, back and sides and passes up through the modules. The optimal solution is to allow the air inlet from all sides. At the top of the card cage there is enough space for the air to distribute and spread before passing out of the venting grill at the top. If there is nothing in close area to sides, the air can also exit here. The airflow routing is the same with or without fans.

Figure 183: MTS LiTE Airflow

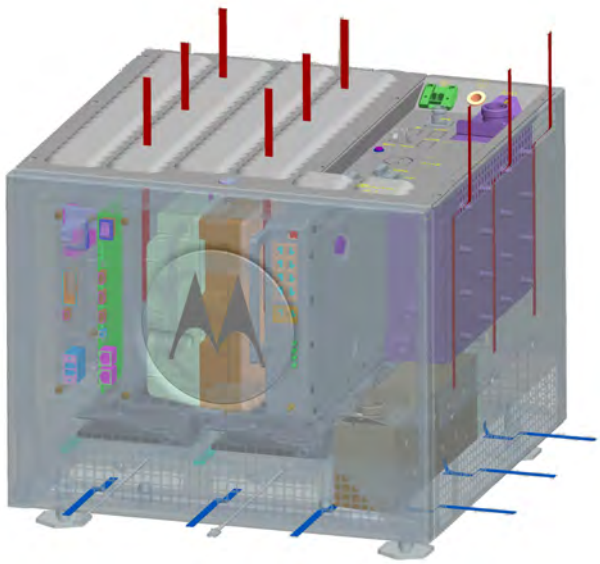

MTS 2:

The 2 BR card cage has a clear opening in the bottom front and small holes in the side and back. Ambient airflow enters at the bottom of the front, back and sides and passes up through the modules. The optimal solution is to allow the air inlet from all sides. At the top of the card cage there is enough space for the air to distribute and spread. It then passes up through the filter section and out of the venting grill at the top. If there is nothing in close area to sides, the air can also exit here. The airflow routing is the same with or without fans.

Figure 184: MTS 2 Airflow

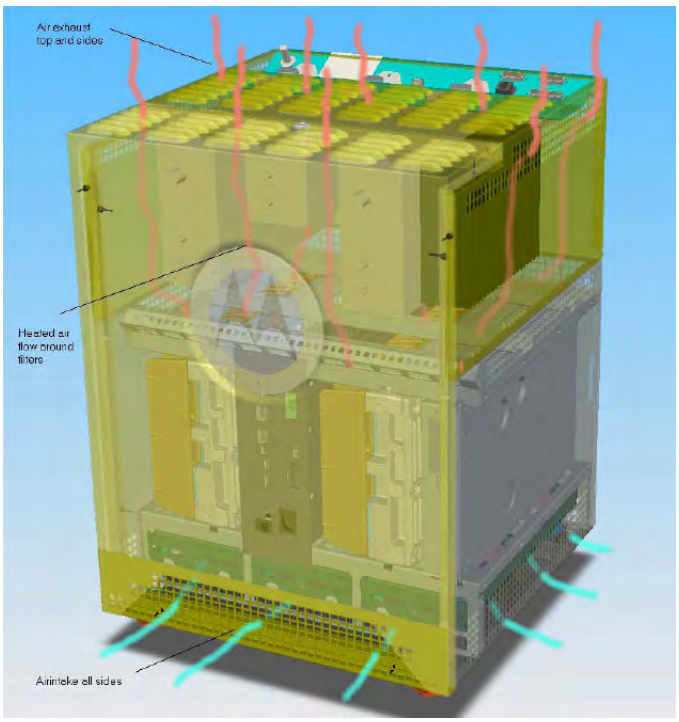

MTS 4:

In MTS 4 the airflow is different. The additional depth and width of the cabinet are used to guide and separate ambient air intake and heated air outlet. For both card cages the main airflow of ambient air enters at the front. At the bottom card cage the air can enter from all sides. For the top card cage the air has to pass in front of and behind the bottom card cage. In the front, between the modules and the cabinet door. In the back, between the bottom card cage back and the back of the cabinet. The flow is obstructed by an insert which guides the hot air from the bottom card cage out to the sides and up between the top card cage and the cabinet sides. The exhaust from the top card cage could be partly obstructed by a Cavity Combiner situated above. The exhaust can occur on all sides. No obstructions are inserted. Due to the obstructions in the airflow, fans are required for all configurations of MTS 4.

The fans have a low rpm alarm indication. Each fan module (part no. WALN4381) has two fans inside. In case of failure, one of the fans still gives an airflow. Therefore the fan module is not considered a periodic maintenance component, but is only replaced when it fails.

Figure 185: MTS 4 Airflow

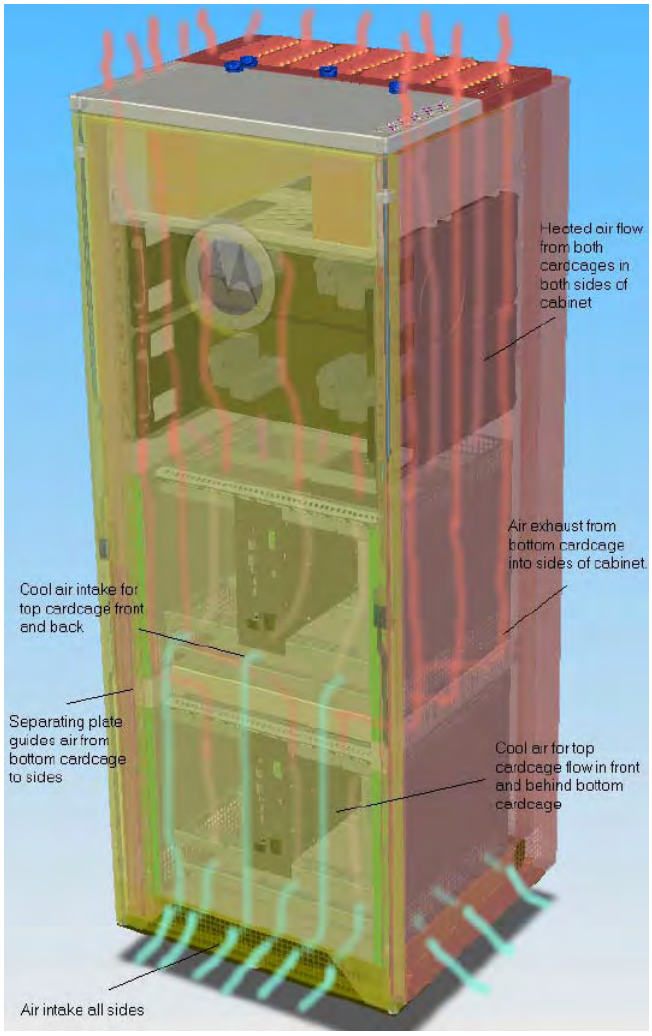

Cooling

Natural convection cooling is applied. For example there is no fan when MTS 2 operates with a load of 295W for 2 BRs, low power PA, plus a charge current of 3 A at + 30 °C.

Forced air from fans placed below units is used when for example MTS 4 operates with a load of 640W for MTS 4 with 2 BRs, MTCC, high power PA plus a charge current of 6 A at + 30 °C.

For all configurations of MTS, see *Table 6: Typical Power Loads and Heat Dissipation Values – Expansion Cabinet 400 MHz Configuration on page 68*

Replacing the Cooling Fans

Procedure:

1 **Warning:** When unplugging the connector from the PSU, wait a few second for the fans to stop.

Open the housing of the cabinet of MTS and unplug the connector from the PSU.

2 Unlock the fan kit by unscrewing the M3x8 screws with serrated washers.

3. Slide out the fan kit from module cage.
4. Insert the new fan kit into module cage.
5. Secure the fan kit by screwing M3x8 screw with a serrated washer.
6. Plug the connector into PSU.

Chapter 14

Technical Specifications

Environmental and Standards Specifications

This section presents the Environmental Specifications and the Standards Specifications.

Environmental Specifications

Table 102: Environmental Specifications

Environmental Specifications	Description
Operating temperature	• MTS LiTE 400 MHz (without fans) -30 °C to 55 °C • MTS LiTE 400 MHz (with fans) -30 °C to 60 °C • MTS LiTE 800 MHz (always fans) -30 °C to 60 °C • MTS 2 400 MHz (without fans) -30 °C to 55 °C • MTS 2 400 MHz (with fans) -30 °C to 60 °C • MTS 2 260 MHz (without fans) -30 °C to 55 °C • MTS 2 800 MHz (always fans) -30 °C to 60 °C • MTS 2 900 MHz (always fans) -30 °C to 60 °C • MTS 4 400 MHz (with fans) -30 °C to 60 °C • MTS 4 400 MHz (without fans) -30 °C to 55 °C • MTS 4 260 MHz (always fans) -30 °C to 60 °C • MTS 4 800 MHz (with fans) -30 °C to 55 °C
Storage temperature	-40 °C to 85 °C
Humidity	5% to 95% non-condensing for 30 C. EN 300 019 1-3 Class 3.2
Operational altitude	-300 m to 3000 m
Environmental protection	IP 20 according to IEC 60529
Operating in use	Shock: EN300 019-2-3 T 3.2
	Vibration: EN300 019-2-3 T 3.2
Storage and Transportation	• Weather protected, not temperature-controlled storage locations. ETSI EN 300 019-1-1 Class 1.2, and EN 300 019-2-1 T1.2 • ETSI EN 300 019-1-2 Class2.3 public transportation, and EN 300 019-2-2 T2.3.

Standards Specifications

Table 103: MTS Standards Specifications

Standards Specifications	Description
Harmonized EN for TETRA	EN 303 035-1: TErrestial Trunked RAdio TETRA EN 302 561: TErrestial Trunked RAdio (TETRA)
Air-Interface	EN 300 392-2
Conformance Test	EN 300 394-1
EU Directives	R&TTE - Radio and Telecommunications Terminal Equipment Directive 1999/5/EC WEEE - Waste Electrical and Electronic Equipment Directive 2002/96/EC RoHS - Restriction of Hazardous Substances Directive 2002/95/EC
Digital Line Interfaces: E1	ITU-T Rec. G. 703: Physical/electrical characteristics of hierarchical digital interfaces.
	Terminal Equipment Requirements (Site Controller and Routers): • TBR 12 (1993-12) / A1 (1996-01), which is a subset of EN 300 248 (Unstructured E1) • TBR 13 (1996-01) which is a subset of EN 300 420 (Structured E1)
	Leased Line Requirements: • ETSI EN 300 418 v1.2.1 (2001-07) and ETSI EN 300 247 v1.2.1 (2001-07) (Unstructured E1) • ETSI EN 300 418 v1.2.1 (2001-07) and ETSI EN 300 419 v1.2.1 (2001-07) (Structured E1) • ETSI EN 300 766 v1.2.1 (2001-07) with octet sequence integrity. (Fractional E1) In case of base stations connected in a redundant ring structure the lowest sum of the link delays between a base station and the zone core shall not exceed 14 ms. No more than 10 base stations can be connected in a ring.
X.21	ITU-T Rec. V11: Electrical characteristics for balanced double current interchange circuits. ETSI EN 300 766 v1.2.1 (2001-07)
Safety	EN60950 - 1: Harmonized Safety Standard R56: Motorola international installation standard
EMC	EN 301 489-1: Common Technical Requirements EN 301 489-18: Specific Requirements for TETRA EN 50121-4 : Railway applications EMC
Environmental	EN 300 019-1-1 class 1.2 Storage

Standards Specifications	Description
	EN 300 019-1-2 class 2.3 Transportation
	EN 300 019-13 class 3.2 Operation, extended temp -30 °C to 55 °C without fans
	EN 300 019-13 class 3.2 Operation, extended temp -30 °C to 60 °C with fans

Cabinet and Module Specifications

The cabinet and module specifications include the dimensions for the cabinet and the technical specifications for the different modules in the cabinets.

MTS Cabinets Frequency Range

The following table lists the frequency values supported for the MTS LiTE, MTS 2, MTS 4.

Table 104:

MTS Cabinet	Frequency Range
MTS LiTE	400 MHz and 800 MHz
MTS 2	260 MHz, 400 MHz, 800 MHz and 900 MHz
MTS 4	260 MHz, 400 MHz, and 800 MHz

Dimensions of the MTS Cabinets

The following table lists the dimensions of the MTS LiTE, MTS 2, MTS 4, and MTS 4 Expansion Cabinets.

Table 105: Dimensions of the MTS 2, MTS 4, and MTS 4 Expansion Cabinets

Physical Dimensions	Description
Depth:	MTS LiTE: 480 mm MTS 2: 472 mm MTS 4: 570 mm
Height:	MTS LiTE: 380 mm MTS 2: 605 mm MTS 4: 1430 mm
Width:	MTS LiTE: 450 mm MTS 2: 443 mm MTS 4: 550 mm
Weight:	with full equipment: MTS LiTE: 35 kg

Physical Dimensions	Description
	MTS 2: 48 kg MTS 4: 141 kg with full equipment incl. packaging: MTS LiTE: 51 kg MTS 2: 64 kg MTS 4: 170 kg

RF Specifications

Table 106: RF Specifications

RF Specifications	Description	Value or Range
Frequency	Low 400 MHz band (TETRA and TEDS):	350 MHz 430 MHz
	High 400 MHz band (TETRA):	380 MHz 470 MHz
	260 MHz (TETRA)	260 MHz – 275 MHz
	800 MHz (TETRA and TEDS):	806 MHz – 870 MHz
	900 MHz (TETRA and TEDS):	917 MHz – 942 MHz
	Duplex spacing:	400 MHz: 10 MHz 260 MHz: 9 MHz 800 MHz: 45 MHz 900 MHz: 15 MHz
	Bandwidth:	400 MHz: 5 MHz 260 MHz: 6 MHz 800 MHz: 19MHz 900 MHz: 10 MHz
	Channel spacing TETRA:	25 kHz (Raster in 6.25 kHz)
	Channel spacing TEDS:	25/50 kHz (Raster in 6.25 kHz)
Transmit Power	Maximum: • 10 W (TEDS High Power, one TX ant., 2 BRs, 2 Duplexers) • 20 W (TEDS High Power, two TX ant., 2 BRs, with fans, 2 Duplexers) • 25 W (TETRA Low Power, two TX ant., 2 BRs, 2 Duplexers) • 40 W (TETRA High Power, two TX ant., 2 BRs, with fans, 2 Duplexers) **Note:** Cavity Combiner and channel spacing less than 250 kHz gives maximum output power between 20 W and 25 W.	
	Adjustable down with 12 dB	

Note:

The first usable TETRA center frequency in each range is 12.5 kHz above the low range and below high range.

The first usable TEDS center frequency in each range is:

- 12.5 kHz above the low range and below high range for 25 kHz channel
- 25 kHz above the low range and below high range for 50 kHz channel

Note: ETSI Compliance Notice: The Base Radio is only ETSI-compliant when used in conjunction with a Motorola-supplied RF distribution system (RFDS). The Base Radio shall not be used without a Motorola-approved RFDS.

Table 107: Auto Tune and Manual Tune Cavity Combining Transmitter-to-Antenna Port Specifications

Specifications	Value or Range
Cavity Combiner Maximum Insertion Loss:	3.9 dB maximum
(@ 150 kHz Channel Spacing, four-channel)	3.5 dB typical **Note:** The cavities are factory set for 150 kHz spacing. Cavities are not tuned to customer frequency and may be field tuned. Cavity combiner insertion loss is combiner only.
Duplex Filter Insertion Loss	1.6 dB maximum
	1.2 dB typical
Total RFDS Insertion Loss	4.5 - 5.2 dB
150 kHz Channel Spacing, four-channel	5.2 dB typical
250 kHz Channel Spacing, four-channel	4.7 dB typical
250 kHz Channel Spacing, two-channel	4.5 dB typical

Table 108: Hybrid Combining Transmitter-to-Antenna Port Specifications

Specifications	Value or Range
Hybrid Combiner Maximum Insertion Loss:	3.3 dB maximum
	3.2 dB typical
Duplex Filter Insertion Loss	1.6 dB maximum
	1.2 dB typical
Total Hybrid Combiner Insertion Loss	4.9 dB maximum
	4.4 dB typical
Input Return Loss	14 dB minimum
	>20 dB typical
Antenna-to-PA Isolation	20 dB minimum

Transmitter Specifications

The following tables list the TETRA and TEDS specifications.

Note: All specifications listed in the following two tables are observed at RF distribution system output unless stated otherwise.

Table 109: Transmit Specifications – TETRA

Transmitter Specification	Value or Range	
Pi/4DQPSK Transmitted Power (10, 25, 40 Watts depending on the configuration) measured at RFDS antenna port:	10 W, 25 W, 40 W	
Normal Conditions:	+2.0 dB	
Extreme Conditions:	+3.0/-4.0 dB	
Transmitter Power (off/standby)	-36 dBm/-40 dBc	
Frequency Stability	± 0.007 ppm **Note:** Stability with site reference connected to station and locked to GPS.	
Base Radio Power Limits	High Power BR: 5W - 80 W Low Power BR: 2W - 36W **Note:** Base Radio Power Limits above are also applicable for 800 MHz. 260 MHz Low Power BR: 2W - 40 W	
Transmitter Power Control	12 dB	
Carrier Feedthrough	-26 dBc	
Transmitter Modulation Accuracy	6% RMS/Burst	(30% peak/symbol)
Synchronization	1/4 symbol	
Adjacent-channel Power due to Modulation (Normal Conditions)	± 25 kHz ± 50 kHz ± 75 kHz	-60 dBc (800 MHz/ 900 MHz: -55 dBc) -70 dBc (800 MHz/ 900 MHz: -65 dBc) -70 dBc(800 MHz/ 900 MHz: -65 dBc)
Adjacent-channel Power due to Modulation (Extreme Conditions)	± 25 kHz ± 50 kHz ± 75 kHz	-50 dBc(800 MHz/ 900 MHz: -45 dBc) -60 dBc(800 MHz/ 900 MHz: -55 dBc) -60 dBc (800 MHz/ 900 MHz: -55 dBc)
Adjacent-channel Power due to Switching	-50 dBc	
Adjacent-channel Power due to Linearization	-30 dBc	
Tx Conducted Emission	100 - 250 kHz	-80 dBc

Table continued…

Transmitter Specification	Value or Range	
	250 - 500 kHz	-85 dBc
	500 - frb kHz	-90 dBc
	At receive band	-100 dBc
Intermodulation Attenuation	70 dB	
RF Input Impedance	50 (nom.)	

Table 110: Transmit Specifications – TEDS

Transmitter Specification	Value or Range	
QAM (TEDS) Transmitted Power (10, 20 Watts depending on the configuration) measured at RFDS antenna port:	10 W, 20 W	
Normal Conditions:	+2.0 dB	
Extreme Conditions:	+3.0/-4.0 dB	
Transmitter Power (off/standby)	-36 dBm/-40 dBc	
Frequency Stability	± 0.007 ppm **Note:** Stability with site reference connected to station and locked to GPS.	
Base Radio Power Limits	High Power TEDS BR: 2W - 32 W **Note:** Base Radio Power Limits above are also applicable for 800 MHz.	
Transmitter Power Control	12 dB	
Transmitter Modulation Accuracy	10% RMS/Burst	
Synchronization	1/4 symbol	
Adjacent-channel power (25kHz)	**Offset**	**Limit**
	25	-55
	50	-65
	75	-67
Adjacent-channel power (50kHz)	**Offset**	**Limit**
	37.5	-55
	62.5	-63
	87.5	-65
Adjacent-channel Power due to Switching	-45 dBc	
Tx Conducted Emission (25kHz TEDS)	100 - 250 kHz	-70 dBc
	250 - 500 kHz	-80 dBc
	500 - 2500 kHz	-80 dBc

Table continued…

Transmitter Specification	Value or Range	
	2500 - frb kHz	-90 dBc
	>frb	-95 dBc
Tx Conducted Emission (50kHz TEDS)	112.5 - 262.5 kHz	-70 dBc
	262.5 - 500 kHz	-75 dBc
	500 - frb kHz	-80 dBc
	>frb	-95 dBc
Intermodulation Attenuation	70 dB	
RF Input Impedance	50 (nom.)	

Receiver Specifications

The receiver specifications are listed in *Table 111: Receiver Specifications – TETRA on page 364* and *Table 112: Receiver Specifications – TEDS on page 365*.

All specifications listed in the following two tables are through the RF Distribution System, unless otherwise stated.

Table 111: Receiver Specifications – TETRA

Receiver Specification	Value or Range
Sensitivity (normal conditions, unprotected T1, static, 4% BER):	
population mean:	-120.0 dBm(-119.5 dBm 800 MHz)
spec limit:	-117.5 dBm
Sensitivity (normal conditions, faded, TU50, 4% BER):	
population mean :	-113.5 dBm(-113.5 dBm 800 MHz)
spec limit:	-111.0 dBm
Degradation (extreme conditions, static and faded)	3 dB
Nominal Error Rate (unprotected T1):	
Static, -85 to -40 dBm:	0.01%
Static -40 to -20 dBm:	0.1%
TU50, -84 to -40 dBm:	0.4%
Maximum On-channel Desired Power Level	-20 dBm
Co-channel Interference (19 dB C/I, faded, unprotected T1): TU50	2.0%
Adjacent Channel Interference (faded, unprotected T1, normal conditions, 45 dB C/I (40 dB C/I for 800 MHz), at -103 dBm): TU50	2.0%
Adjacent Channel Interference (faded, unprotected T1, extreme conditions, 35 dB C/I (30 dB C/I for 800 MHz)), at -97 dBm): TU50	2.0%
Blocking (static, normal conditions, 4% BER):	

Table continued…

Receiver Specification	Value or Range
50 - 100 kHz	-40 dBm
100 - 200 kHz	-35 dBm
200 - 500 kHz	-30 dBm
>500 kHz	-25 dBm
Spurious Responses (normal conditions)	6 max.
1st Image	70 dB
1/2 IF	70 dB
2nd Image	70 dB
1/2 2nd IF	70 dB
Intermodulation Response Rejection: Normal conditions	65 dB

Table 112: Receiver Specifications – TEDS

Receiver Specification	Value or Range
Degradation (extreme conditions, static and faded)	3 dB
Maximum On-channel Desired Power Level	-30 dBm
Co-channel Interference (19dB C/I, faded, 16QAM, rate=1/2) TU50:	10.0%
Adjacent Channel Interference (static, 64QAM, 50kHz, 30dB C/I at -97dBm, rate = 1/1) Applicable for both normal and extreme conditions.	3.0%
Blocking 25kHz TEDS (static, normal conditions, 3% BER):	
75 kHz	-40 dBm
150 kHz	-35 dBm
350 kHz	-30 dBm
1, 2, 5, 10 MHz	-25 dBm
Blocking 50 kHz TEDS (static, normal conditions, 3% BER):	
150 kHz	-40 dBm
350 kHz	-35 dBm
700 kHz	-30 dBm
2, 5, 10 MHz	-25 dBm
Spurious Responses (normal conds, QAM4, 25k, static, rate=1/1)	
1st Image	68 dB
1/2 IF	68 dB
2nd Image	68 dB
1/2 2nd IF	68 dB
Intermodulation Response Rejection (normal conds, QAM4, 25kHz, static, rate = 1/1)	66 dB

Site Controller Specifications

Table 113: Site Controller Performance Specifications

Site Controller Specification	Value or Range
Power Consumption	20–25 W
Dimension	Height: 240 mm Width: 61 mm Depth: 393 mm
Weight	2.3 kg
Memory	DDRSDRAM: one removable, single-bank, 128 Mbyte module, 64-bit wide, 266 MHz data-rate, JEDEC-standard, 200-pin, PC2100, unbuffered, CAS latency 2.5, SO-DIMM.
	Boot Flash: a single, 16-bit wide sectored Flash device

Internal GPS Module Input Specifications

Table 114: Internal GPS Input Specifications

Internal GPS Input specifications	Description
Sensitivity	TTFF (Time to First Fix) = 120 s @ -133 dBm
Max input power level	-40 dBm
GPS antenna bias voltage	+5.0 V
Maximum output current	30 mA

MTS LiTE / MTS 2 Duplexer Specifications

Table 115: MTS LiTE / MTS 2 Duplexer Specifications

MTS 2 Duplexer Specifications	Description
Dimensions	Height: 170 mm Width: 70 mm Depth: 280 mm
Weight	5.3 kg
Forward Reverse Power Measurement Accuracy	+1.0/-1.2 dB

MTS LiTE / MTS 2 Preselector Specifications

Table 116: MTS LiTE / MTS 2 Preselector Specifications

MTS 2 Preselector Specifications	Description
Dimensions	Height: 85 mm

Table continued…

MTS 2 Preselector Specifications	Description
	Width: 70 mm Depth: 280 mm
Weight	2.8 kg

MTS 4 Duplexer Specifications

Table 117: MTS 4 Duplexer Specifications

MTS 4 Duplexer Specifications	Description
Dimensions	Height: 180 mm Width: 90 mm Depth: 400 mm
Weight	7.6 kg
Forward Reverse Power Measurement Accuracy	±0.5 dB

MTS 4 Post Filter Specifications

Table 118: MTS 4 Post Filter Specifications

MTS 4 Post Filter Specifications	Description
Dimensions	Height: 100 mm Width: 167 mm Depth: 200 mm
Weight	5 kg
Forward Reverse Power Measurement Accuracy	±0.5 dB
TX signal	PI/4DQPSK, up to 4 carriers
Avg. Input Power	180 W

MTS 4 Preselector Specifications

Table 119: MTS 4 Preselector Specifications

MTS 4 Preselector Specifications	Description
Dimensions	Height: 90 mm Width: 180 mm Depth: 200 mm
Weight	3.6 kg

Auto Tune Cavity Combiner (ATCC) Specifications

Table 120: Auto Tune Cavity Combiner (ATCC) Specifications

Auto Tune Cavity Combiner (ATCC) Specifications	Description
Dimensions	Height: 173 mm Width: 447 mm Depth: 435 mm
Weight	12.2 kg
Vendor Default Settings	150 kHz channel spacing Fine-tune interval 8 hours

Manual Tune Cavity Combiner (MTCC) Specifications

Table 121: Manual Tune Cavity Combiner (MTCC) Specifications

Manual Tune Cavity Combiner (MTCC) Specifications	Description
Dimensions	Height: 173 mm Width: 447 mm Depth: 435 mm
Weight	11.3 kg

Hybrid Combiner Specifications

Table 122: Hybrid Combiner Specifications

Hybrid Combiner Specifications	Description
Dimensions	Height: 170 mm Width: 55 mm Depth: 255 mm
Weight	2.1 kg
Carrier combine power	2x35 W without fans 2x80 W with fans

Base Radio Specifications

Table 123: Base Radio Specifications

BR Specification	Description
Dimensions	Height: 240 mm Width: 124 mm Depth: 393 mm
Weight	8.9 kg

Power Supply Unit Specifications

Table 124: Power Supply Specifications

PSU Specifications	Description
Technical Requirements	Input Voltage DC: -41 to -60 VDC Input Voltage AC: 90 to 264 VAC; The PSU shall withstand 300 VAC Input Frequency AC: 45 to 66 Hz
	Output Voltage 1: 28.5 VDC 2% Output Current 1: 20 A
	Output Voltage 2: 7.0 VDC +5 -0% Output Current 2: 8 A
	Output Voltage ATCC: 28.5 VDC ±5% Output Current ATCC: 400 mA, 1000 mA peak for less than 3 ms
	Output Voltage Fan: 12–24 VDC ±5% Output Current Fan: 3 A (1 A for each output)
	Battery Charging Output Voltage 3: 40.5–57 VDC Output Current 3: 0–6 A (temperature dependent) Ripple and Noise at full load: ≤ 100 mVpp [20 MHz bandwidth]
	Total Output Power: 1035 W
	Efficiency: ≥ 84% @ 184 VAC to 270 VAC ≥ 80% @ 90 VAC to 184 VAC ≥ 88% @ –48 VDC ≥ 86% @ –40,5 VDC
	Hold up time, at AC mains dropout: 15 ms

Table continued…

PSU Specifications	Description
	Hold up time, at 48 VDC input dropout: 2 ms @ 48 VDC operation, full load and +30 °C Minimum current when power supply switch is turned off: 2 mA
Safety	EN 60950-1/2001, UL 1950, CSA 22.2 No. 950, protection class 1, DC outputs designed as Safety Extra Low Voltage CE marked, designed to meet CB certification and cULus requirements
EMC	Immunity: EN 55024/1998 + A1/2001 EN 61000-4-3, EN 61000-4-2, EN 61000-4-6, EN 61000-4-5, EN 61000-4-4, EN 61000-4-11
	Emission: EN 55022 class A EN 61000-3-3, EN 61000-3-2
Dimensions	Height: 240 mm Width: 97 mm Depth: 391 mm
Weight	5 kg

XHUB Controller Specifications

The following table lists the XHUB controller performance specifications.

Table 125: XHUB Controller Specifications

XHUB Controller Specification	Value or Range
Power Consumption	5 W to 8 W
Dimension	Height: 240 mm Width: 61 mm Depth: 393 mm
Weight	2.2 kg

RX Splitter Specifications

The following table lists the RX Splitter specifications.

Table 126: MTS 4 Expansion Cabinet RX Splitter Specifications

RX Splitter Specification	Value or Range
Dimension	Height: 139 mm Width: 124 mm Depth: 45 mm
Weight	0.4 kg

MTS LiTE, MTS 2, and MTS 4 Connectors

Table 127: MTS LiTE/MTS 2 Connectors

Connector	Type	Description
External GPS	SUB D	DB15 Female connector
Alarms	SUB D	DB25 Female connector
E1	RJ45	Functionality described in Hardware installation chapter
X.21	SUB D	DB15 Male connector Functionality described in Hardware installation chapter
Ethernet	RJ45	Functionality described in Hardware installation chapter
Internal GPS	N type	Female connector
Mains input	IEC 320	230 V Supply
DC	-48 VDC	2 pin Phoenix connector
Antennas	DIN 7–16	Female connector

Table 128: MTS 4 Connectors

Connector	Type	Description
External GPS1 and GPS2	SUB D	DB15 Female connector
Alarms	SUB D	DB25 Female connector
E1	RJ45	Functionality described in Hardware installation chapter
X.21	SUB D	DB15 Male connector
Ethernet	RJ45	Functionality described in Hardware installation chapter
Internal GPS	N type	Female connector
Mains input	IEC 320	230 V Supply
DC	-48 VDC	4 pin Phoenix connector
Antennas	DIN 7–16	Female connector

Chapter 15

Expansion Options

Expansion options can be ordered from Motorola. To order an expansion option, see the Ordering Guide on ECAT.

Additional Base Radio for MTS 2

It is possible to complement MTS 2 (with one Base Radio) with additional Base Radio.

Note: The second Base Radio for MTS 2 is delivered with the expansion kit that includes required equipment and cables.

Cable Connections

Cable connections before expansion

Figure 191: RF Cabling Diagram for MTS 2 with one TX/RX ant. and up to two additional RX ant. before Expansion

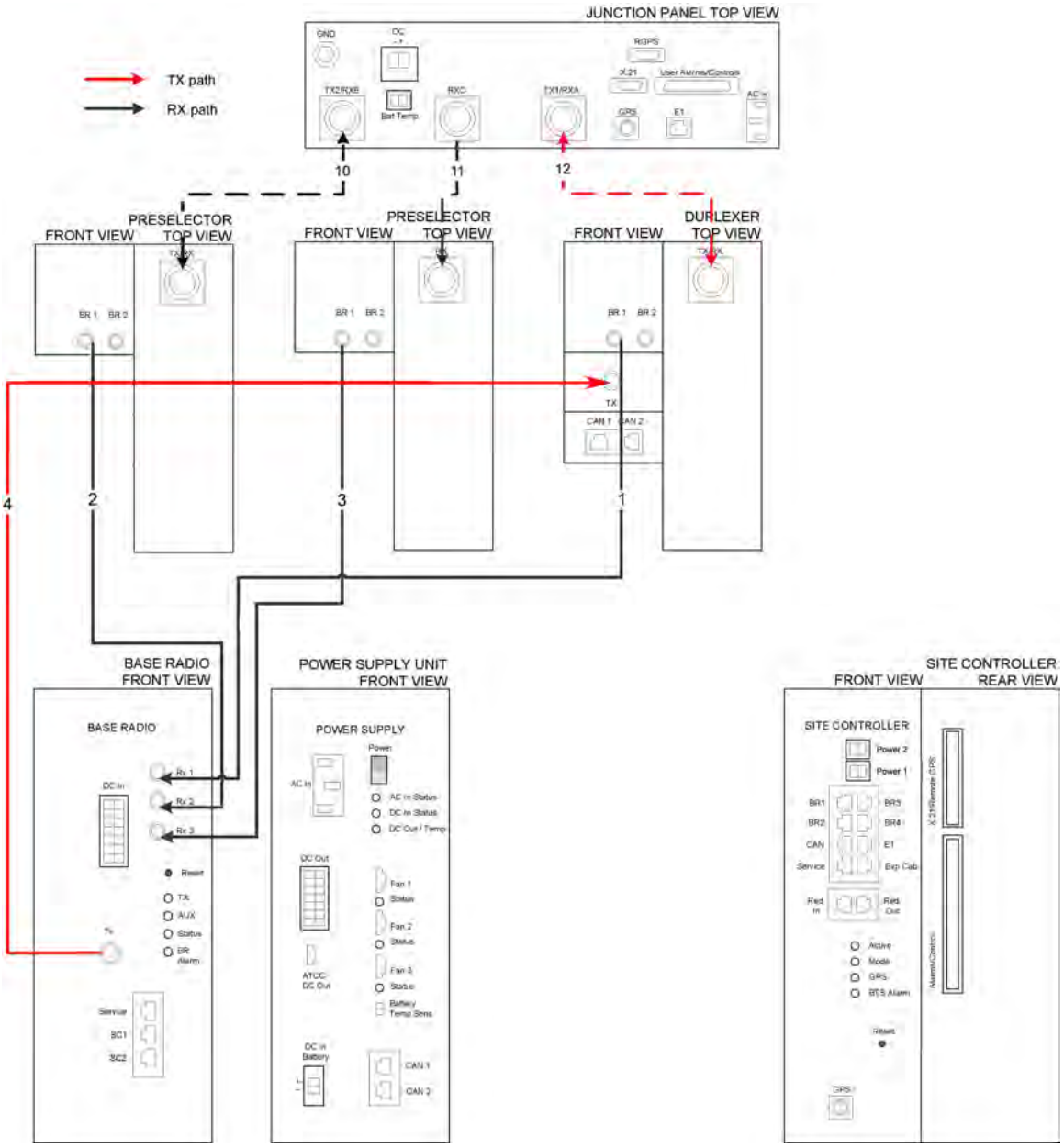

Figure 192: E1 and Ethernet Cabling Diagram for MTS 2 before Expansion

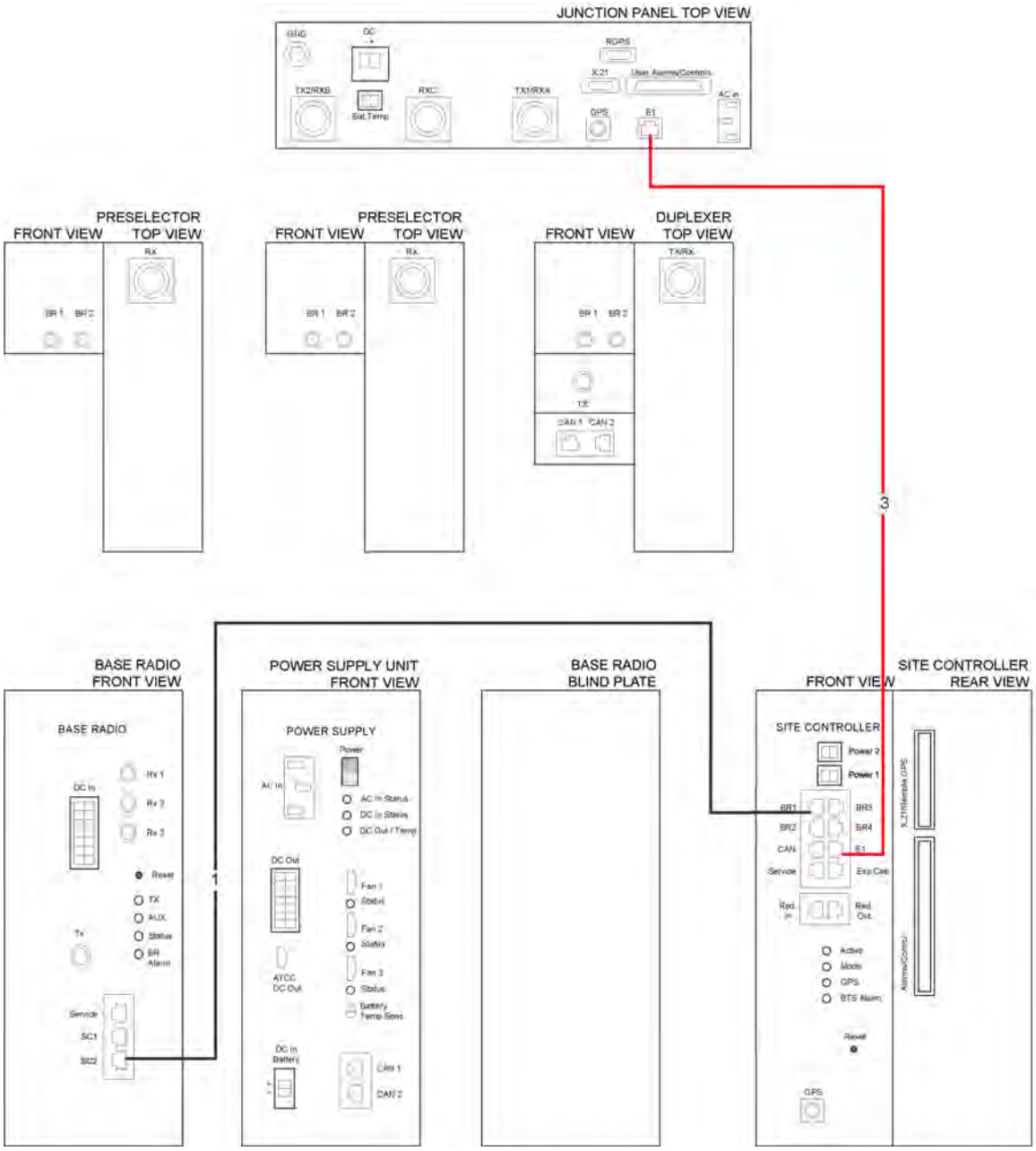

Cable connections after expansion

Figure 193: RF Cabling Diagram for MTS 2 with one TX/RX ant. and up to two RX ant. after Expansion

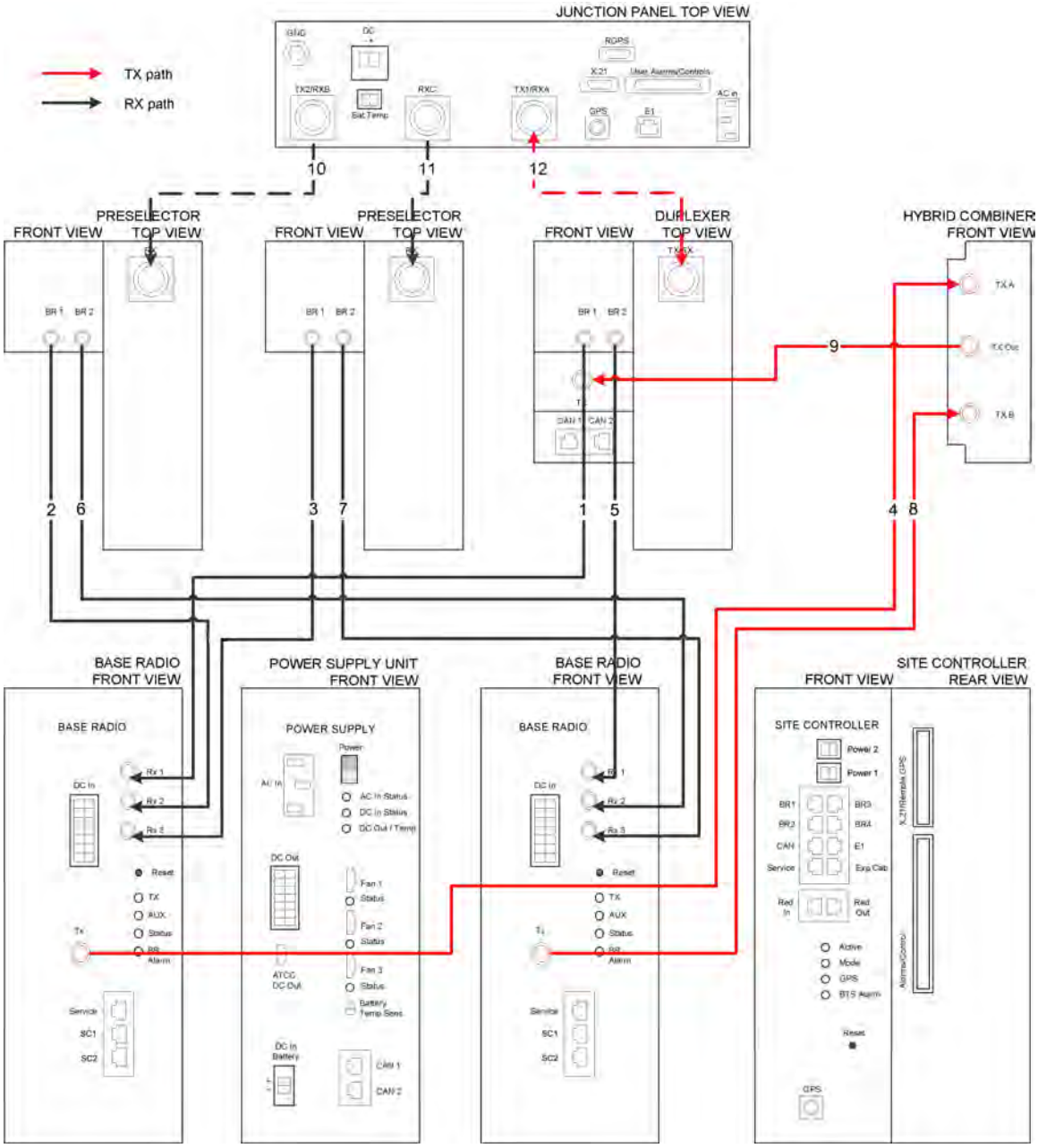

Note: For non-duplexed RF/TX, please see *Figure 110: RF Cabling/Connections for MTS 2 with One TX ant. and up to Two Additional RX ant. on page 168*.

Figure 194: E1 and Ethernet Cabling Diagram for MTS 2 after Expansion

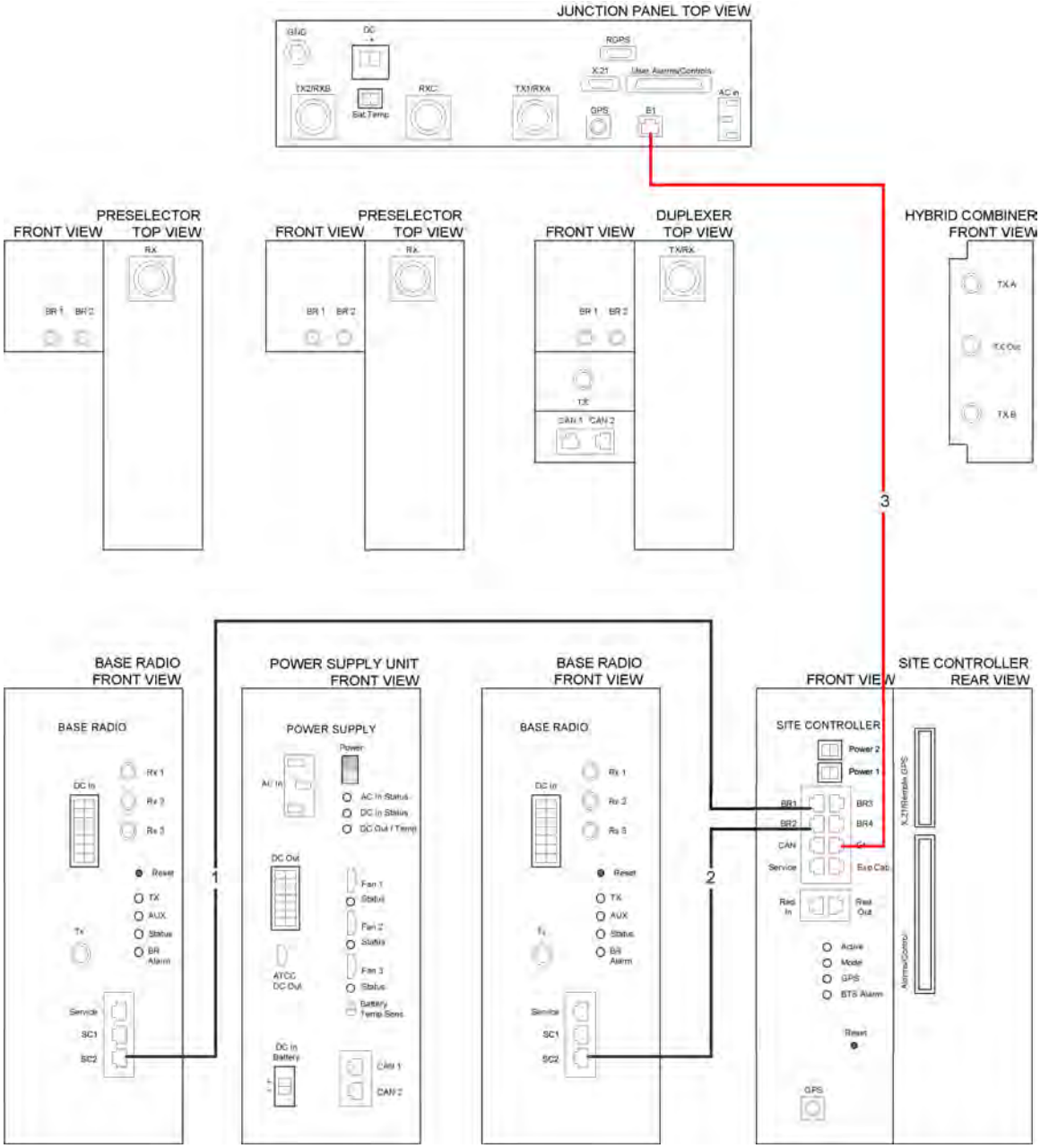

Adding an Additional Base Radio to MTS 2

When and where to use:

Follow this process install the second Base Radio to the MTS 2 cabinet.

Process:

1 *Installing an Additional Base Radio to MTS 2 on page 378*
2 *Installing the Hybrid Combiner on page 379*
3 *Configuring and Verifying the Base Radio on page 213*

Installing an Additional Base Radio to MTS 2

Procedure:

1 Remove the Blind Plate where the additional Base Radio is to be assembled.

2 Label all new Rx cables with labels included in the expansion kit.

3 Attach the Rx cables to the filters. Connect them according to the scheme below:

#	Part no	Cable type	Label	From	To
5	3066543B01	Rx cable	Rx1	Filter pos 1 / BR2	BR2 / Rx1
6	3066543B01	Rx cable	Rx2	Filter pos 2 / BR2	BR2 / Rx2
7	3066543B01	Rx cable	Rx3	Filter pos 3 / BR2	BR2 / Rx3

Note: Index numbers in table above refer to cable connections shown in *Figure 193: RF Cabling Diagram for MTS 2 with one TX/RX ant. and up to two RX ant. after Expansion on page 376*.

Note: At this stage only connect the cables to the filters.

4 Attach the Tx-cable to the **Tx** input of the filter in position 2.

Note: At this stage only connect the cable to the filter.

5 Attach the Ethernet cable 3066544B02 to the **BR2** connector on the Site Controller. This is illustrated in *Figure 194: E1 and Ethernet Cabling Diagram for MTS 2 after Expansion on page 377* as connection #2.

Note: At this stage only connect the cable to the Site Controller. Follow the color scheme displayed on the Site Controller front panel.

6 Insert the additional Base Radio by aligning the side rails with the appropriate rail guides inside the Base Radio chassis.

7 Gently push the additional module completely into the Base Radio chassis assembly using the module handle.

Caution: Be careful not to damage any of the cables previously connected when pushing the Base Radio into position.

8 Secure the additional module using two TORX screws. Tighten the screws to a torque of 2.7 Nm.

9 Connect the Power cables, Ethernet cable, Tx cable and Rx Cables to the BR front plate. Make sure cables are connected according to scheme below:

#	Part number	Cable type	Label	From	To
N/A	3066545B01	DC Power Cable	N/A	PSU / DC Out	BR1 / DC IN
					BR2 / DC In
					SC1 / Power
5	3066543B01	Rx Cable	Rx1	Filter pos 1 / BR2	BR2 / Rx1
6			Rx2	Filter pos 2 / BR2	BR2 / Rx2
7			Rx3	Filter pos 3 / BR2	BR2 / Rx3
N/A	3066543B05	Tx Cable	N/A	Filter pos 2 / Tx	BR2 / Tx
2 in **A)**	3066545B02	Ethernet	N/A	SC1 / BR2	BR2 / SC1

Note: Index numbers in table above refer to cable connections shown in *Figure 193: RF Cabling Diagram for MTS 2 with one TX/RX ant. and up to two RX ant. after Expansion on page 376* or in *Figure 194: E1 and Ethernet Cabling Diagram for MTS 2 after Expansion on page 377* for **A)**.

Note: DC Power Cable (3066545B01) already exists before expansion of MTS 2.

10 Switch ON the Power Supply Unit (You do not need to do this if doing a hotswap).

Installing the Hybrid Combiner

If current MTS 2 configuration include one Duplexer, installation of the Hybrid Combiner also included in the expansion option is necessary.

Note: If current MTS 2 configuration includes two Duplexers, installation of the Hybrid Combiner is not needed.

Procedure:

1 Switch OFF the Power Supply Unit.

2 On the Duplexer, unplug the TX cable connected to the first Base Radio.

3 Assemble the Bracket with the three M6x10 screws.

4 Fasten the two M4x10 screws that are to hold the Hybrid Combiner, but do not tighten them fully.

5 Place the Hybrid Combiner on the bracket of the cabinet, with the heat sing facing inwards toward the center of the cabinet.

6 Slide the Hybrid Combiner at an angle ensuring that the lip at the back of the Hybrid Combiner is secured behind the bracket.

7 Tighten the two M4x10 screws to the bracket.

8 Attach the TX cables according to the scheme below:

#	Part number	From	To	Notes
4	3066543B12	BR1 / TX	Hybrid Combiner / TX A	Existing cable previously unplugged from the Duplexer
8	3066543B05	BR2 / TX	Hybrid Combiner / TX B	
9	3066543B06	Hybrid Combiner / TX Out	Duplexer / TX	

Note: Index numbers in table above refer to cable connections shown in *Figure 193: RF Cabling Diagram for MTS 2 with one TX/RX ant. and up to two RX ant. after Expansion on page 376*.

9 Switch ON the Power Supply Unit.

Configuration

When the additional Base Radio has been installed properly it needs to be configured and verified. In order to do so, follow *Configuring and Verifying the Base Radio on page 213*.

In addition to this, the following parameters need to be configured in TESS application:

- Factory password
- Field password
- Cabinet ID
- Position ID
- Carrier Number (TX/RX frequencies are auto-generated based on Carrier Number setting)
- Default TX Power level

Note: When these parameters have been configured in TESS Application and after the modified configuration file has been uploaded to the Site Controller, the complete site needs to be reset to implement the configuration change.

Additional Module Cage for MTS 4

It is possible to complement MTS 4 with additional module cage.

Note: The module cage for MTS 4 is delivered with the expansion kit that includes required equipment and cables.

Adding an Additional Module Cage to MTS 4

Follow the procedure below to add a second module cage to the MTS 4 cabinet.

Procedure:

1. Remove the Module Cage Beauty Plate.
2. Mount all cables going from the lower Module Cage in your specific configuration and fix them temporarily in the rack before mounting the air divider and module cage.

   Note: This would typically be:

   - Ethernet cables from Base Radio(s) in lower Module Cage to SC in upper Module Cage (SC2).
   - Ethernet cables from Base Radio(s) in upper Module Cage to SC in lower Module Cage (SC1).
   - CAN Bus cables to and from Filters.
3. Connect the Rx cables to the filters and let them hang on the back side behind Cavity Combiners that may exist in configuration.
4. Connect the AC Power cable (3066553B01), the DC Power cable (3066553B01) and the Battery Sensor cable (3066556B02) to the adequate connectors on the Junction Panel and let them hang on the back side behind Cavity Combiners that may exist in configuration.
5. Catch Rx cables, AC Power cable, DC Power cable and Battery Sensor cable in the empty space where new module cage is to be assembled and temporarily fix them at the front.
6. Assemble the Air Separator shelf above the existing Module Cage. Use four M6x16 screws included in the expansion kit.
7. Assemble the new Module Cage on top of the Air Separator shelf. Use eight M6x16 screws included in the expansion kit.

   Note: You may have to temporarily remove the fans in order to fasten the screws.
8. If applicable, remove the Power Supply Unit Blind Plate.

   Note: If Power Supply Unit has been pre-assembled in your configuration, jump directly to Step 8.
9. Place the Power Supply Unit on the slide rails in the Module Cage and push it to the back.
10. Secure the Power Supply Unit to the Module Cage with the two M4x10 Torx screws and lock the washers.
11. Connect the power supply cables and optional backup battery cables according to the scheme below:

Part no	Cable type	From	To
3066551B01	DC Power Cable	Junction panel / DC2	PSU2 / DC In

Table continued…

3066553B01	AC Power Cable	Junction panel / AC In 2	PSU2 / AC In
3066556B02	Batt Sens cable	Junction panel / Bat Temp 2	PSU2 / Battery Temp. Sens.
3066545B01	DC Power Cable	BR3 / DC In	PSU2 / DC Out
		BR4 / DC In	
		Site Controller / Power	

Note: If Base Radio being added is the second Base Radio in a Module Cage (BR2 or BR4), DC Power Cable (3066545B01) is already existing in configuration.

12 Connect the RJ45 cable according to the scheme below:

Part no	Cable type	From	To
3066544B06	RJ45 Cable	PSU2 / CAN1	CAN socket where terminator is situated (terminator to be removed and replaced by the cable instead). Could be on a filter or ATCC. In case of no redundant Site Controller, the terminator should be placed in PSU 2/ CAN 2 output.

13 Switch ON the Power Supply Unit.

14 Check the LED indicators to verify the PSU is operating correctly.

Configuration

No configuration in itself is needed for the module cage, but the Power Supply Unit needs to be configured and this is described in *Updating the Mapping List with the New PSU TrackID on page 303*.

Installation and configuration of additional Base Radios are described separately in *Additional Base Radio for Existing Module Cage in MTS 4 on page 381*.

Furthermore, if an additional Site Controller is ordered as a separate expansion kit, it needs to be installed and configured, see *Redundant Site Controller on page 389*.

Additional Base Radio for Existing Module Cage in MTS 4

It is possible to add a Base Radio into an existing module cage of the MTS 4.

Note: The additional Base Radio is delivered with the expansion kit that includes required equipment and cables.

Cable Connections

Cable Connections Before Expansion

Figure 195: RF Cabling of MTS 4 with one TX ant. Before Expansion

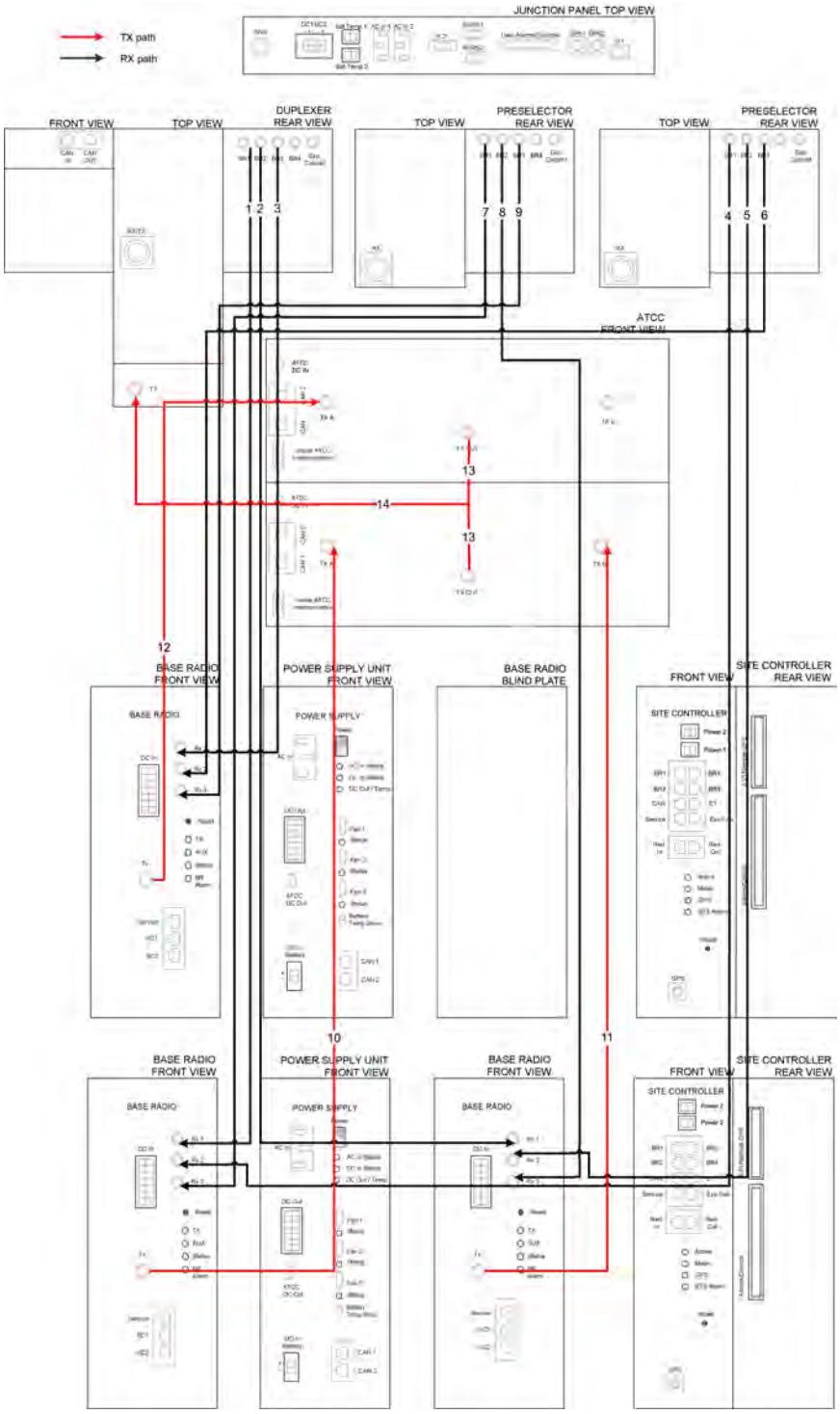

Figure 196: RF Cabling of MTS 4 with two TX ant. Before Expansion

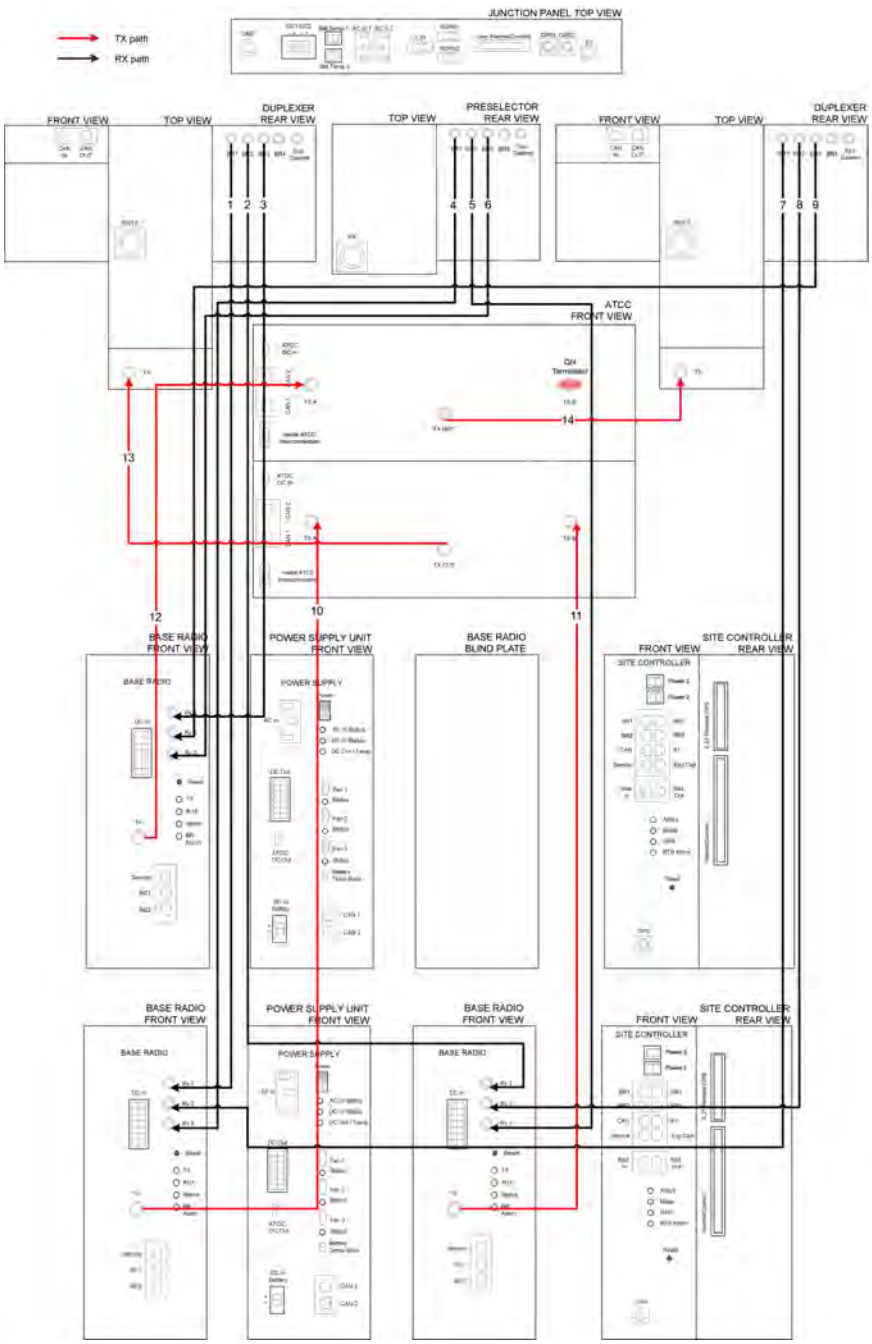

Figure 197: E1 and Ethernet Connections of MTS 4 Before Expansion

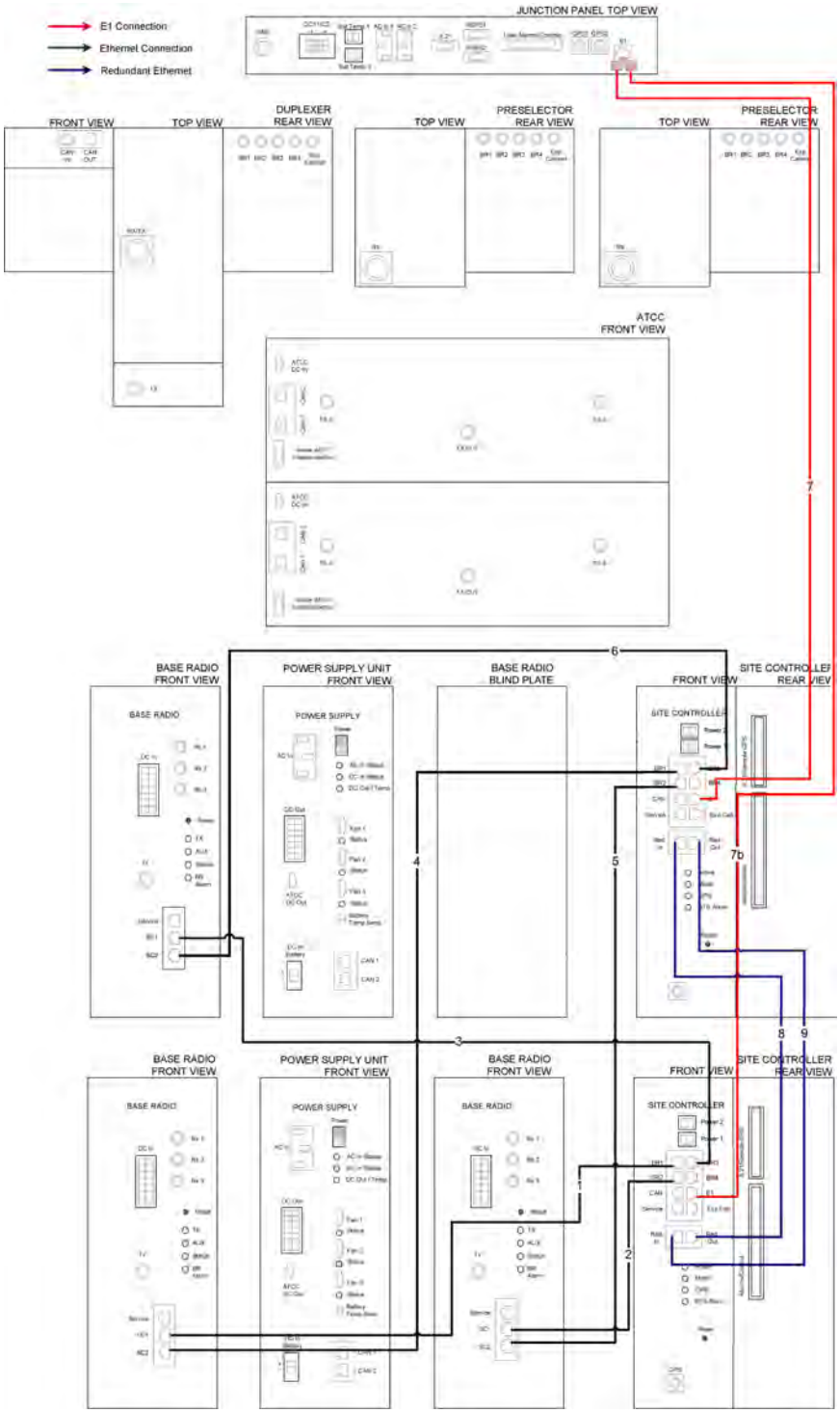

Cable Connections After Expansion

Figure 198: RF Cabling Diagram of MTS 4 with One TX ant. After Expansion

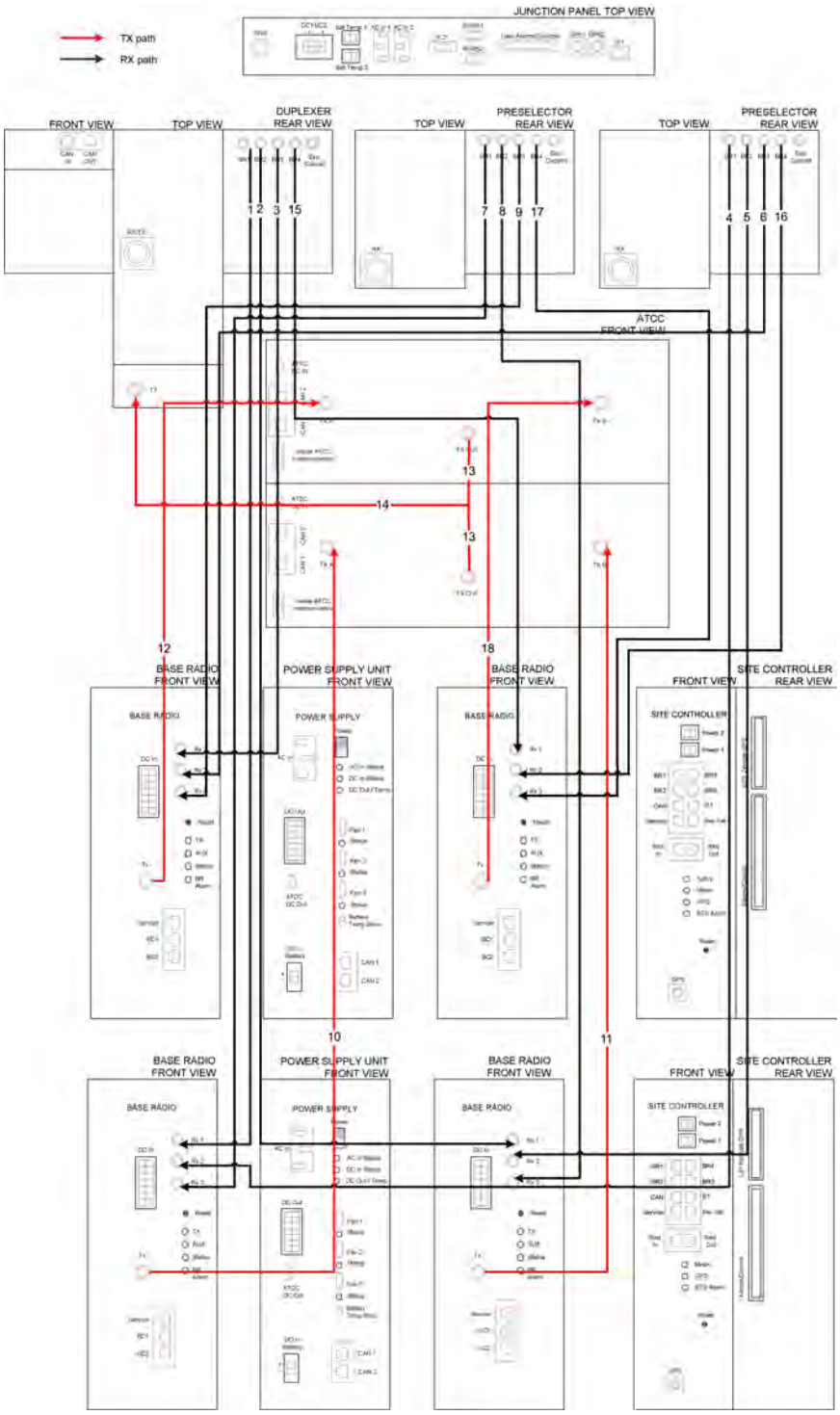

Note: Cables 15, 16, 17, and 18 in *Figure 198: RF Cabling Diagram of MTS 4 with One TX ant. After Expansion on page 385* have been added during expansion.

Figure 199: RF Cabling Diagram of MTS 4 with two TX ant. After Expansion

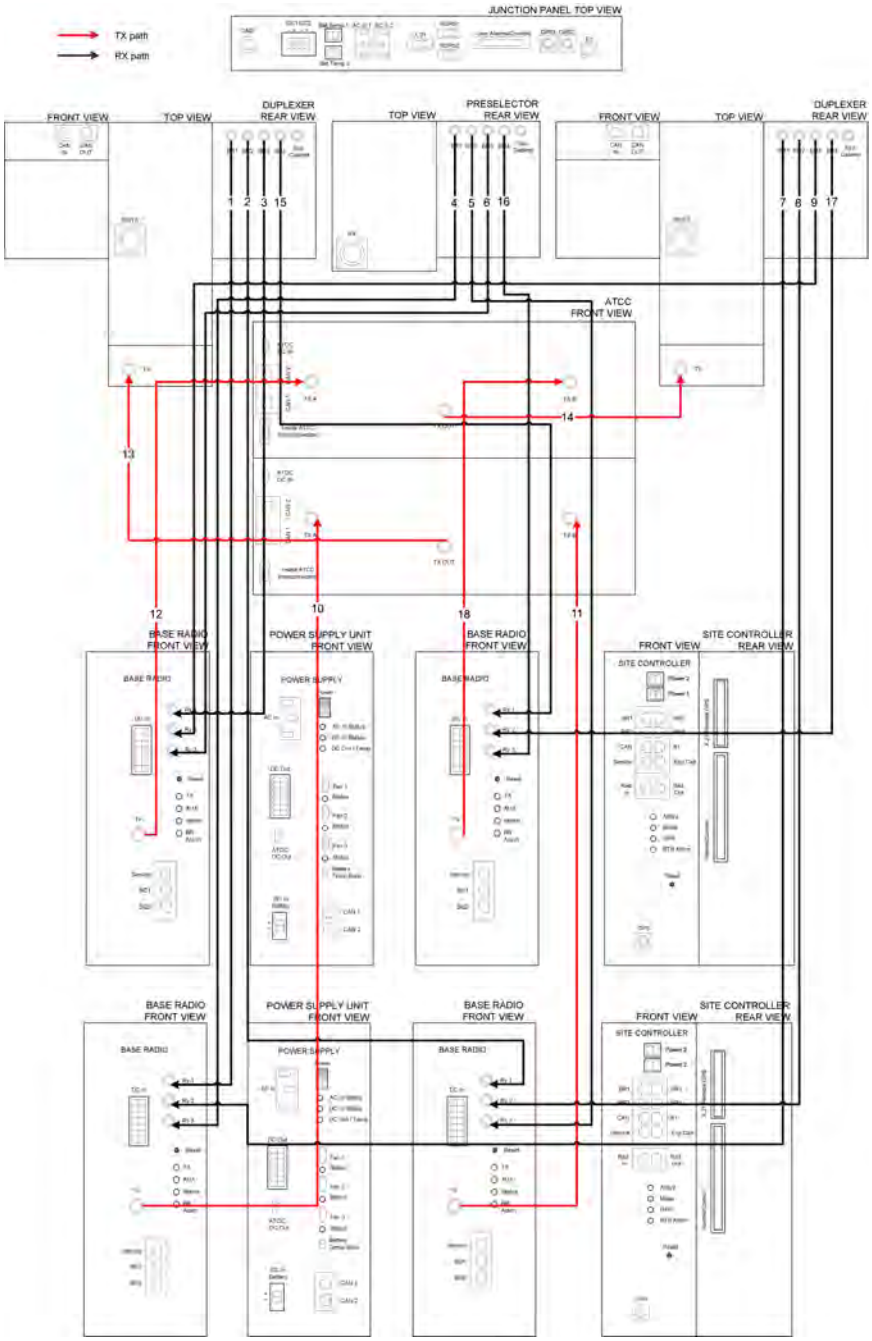

Note: Cables 15, 16, 17, and 18 in *Figure 199: RF Cabling Diagram of MTS 4 with two TX ant. After Expansion on page 386* have been added during expansion.

Figure 200: E1 and Ethernet Cabling of MTS 4 After Expansion

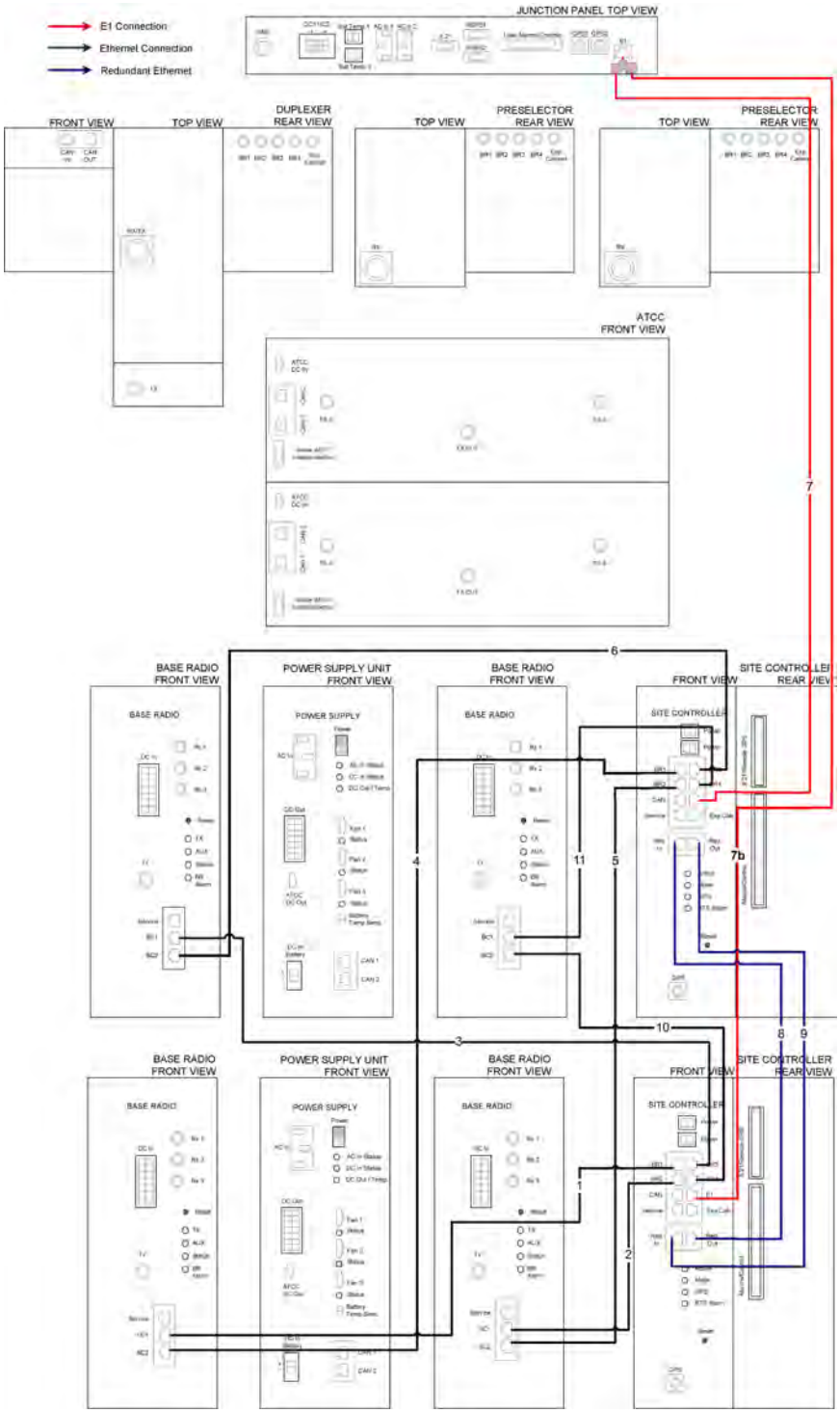

Note: Cables 10 and 11 in *Figure 200: E1 and Ethernet Cabling of MTS 4 After Expansion on page 387* have been added during expansion.

Adding an Additional Base Radio to MTS 4

Follow the procedure below to install an additional Base radio for MTS 4. The images below illustrate cable connections before adding a third Base Radio to the configuration.

Procedure:

1. Remove the Blind Plate where the additional Base Radio is to be added.
2. Label all Rx cables with labels included in the expansion kit.
3. Attach the Rx cables to the filters. Connect them according to the scheme below:

#	Part no	Cable type	Label	From	To
15	3066543B02	RX cable	Rx1	Filter 1 / BR#	BR# / Rx1
16			Rx2	Filter 2/ BR#	BR# / Rx2
17			Rx3	Filter 3/ BR#	BR# / Rx3

Note: If Base Radio to be added is BR2, replace BR# with BR2 i table above, and so on.

Note: Index numbers in table above refer to cable connections shown in *Cable Connections*.

Note: At this stage only connect the cables to the filters.

4. Attach the Tx cable to the Tx input of the Cavity Combiner according to the scheme below:

#	Note	Part no	Cable type	From	To
11	If BR2	3066543B08	Tx cable	CC1 / TxB	BR2 / Tx
12	If BR3	3066543B08	Tx cable	CC2 / TxA	BR3 / Tx
18	If BR4	3066543B08	Tx cable	CC2 / TxB	BR4 / Tx

Note: Index numbers in table above refer to cable connections shown in *Cable Connections*.

Note: At this stage only connect the cable to the Cavity Combiner (ATCC or MTCC).

5. Attach the Ethernet cable to the appropriate BR input of the Site Controller according to the scheme below:

#	Note	Part no	Cable type	From	To
2	If BR2	3066544B02	Ethernet cable	BR2 / SC1	SC1 / BR2
6	If BR3	3066544B04	Ethernet cable	BR3 / SC1	SC1 / BR3
11	If BR4	3066544B05	Ethernet cable	BR4 / SC1	SC1 / BR4

Note: Index numbers in table above refer to cable connections shown in *Cable Connections*.

Note: At this stage only connect the cable to the Site Controller.

Note: If the Ethernet cable is being wired from a Base Radio in one Module Cage to a Site Controller in another Module Cage, the Ethernet cable is to be drawn outside of the Module Cage.

6 Insert the additional Base Radio by aligning the side rails with the appropriate rail guides inside the Base Radio chassis.
7 Gently push the additional module completely into the Base Radio chassis assembly using the module handle(s). Be careful not to damage any of the cables previously connected when pushing the Base Radio into position.
8 Secure the additional module using two TORX screws. Tighten the screws to a torque of 2.7 Nm.
9 Connect the Power cables, Ethernet cable, Tx cable and Rx cables to the BR front plate.

Note: If single or dual diversity, use QMA terminator (2866544A01) in unused Rx connectors on Base Radio(s).

10 Switch ON the Power Supply Unit. You do not need to do this if doing a hotswap.

Configuration

Basic configuration of base radios is needed when additional base radio(s) has been added to the MTS 4 cabinet. This is described in *Configuring and Verifying the Base Radio on page 213*.

Note:

Base radios in the second Module Cage should be configured with ***<cabinet>:<position>*** set as `1:3` and `1:4`.

Note: For configurations with Manual Tuned Cavity Combiner(s), the MTCC needs to be tuned after adding additional Base Radio.

In addition to this, the following parameters need to be configured in TESS application:

- Factory password
- Field password
- Cabinet ID
- Position ID
- Carrier Number (TX/RX frequencies are auto-generated based on Carrier Number setting)
- Default TX Power level

Note: When these parameters have been configured in TESS Application and after the modified configuration file has been uploaded to the Site Controller, the complete site needs to be reset to implement the configuration change.

Redundant Site Controller

It is possible to add an additional (redundant) Site Controller to MTS 4. To add a redundant Site Controller, two module cages must be present in the MTS 4.

Note: If a redundant Site Controller is added to an MTS with an expansion cabinet, a redundant XHUB must also be added.

Note:

Redundant Site Controller feature is supported on releases:

- R6.0_001.12, MTS 05
- R5.2_002.34, MTS 10

and later.

The additional Site Controller is delivered with the expansion kit that includes required equipment and cables.

Adding a Redundant Site Controller

This section described how to install and configure an additional Site Controller, gaining Redundant Site Controller functionality.

Caution: You must be familiar with Man-Machine Interface (MMI) commands and their usage before performing procedures in this chapter. Improperly applying MMI commands can result in equipment damage.

Important:

Disable your Firewall application before attempting to transfer files.

The MTS Site Controller has the following modes of operation:

- **BOOT1** – to access this mode interrupt the booting process by pressing **Escape** key or **Control+C** combination when appropriate message is shown. A password may be required to enter this mode.
- **Test Application** – to access this mode enter the `testapp` command when in BOOT1 mode. To go back to normal Site Controller Application enter reset `-oplatform` command to reboot and resume normal operation.
- **Site Controller Application** – if the boot process is not interrupted, this is the default mode of operation.

Note: When adding an additional (redundant) Site Controller, there will be some service downtime while making physical modifications.

Process:

1. Back up the Site Controller configuration of the existing Site Controller.

   See the respective restoration manual (DIPS/DIPC systems) or *Service Manual* (DIPM system) for MTS Configuration Backup procedures.

   Note: This assumes that the existing Site Controller is properly configured and in service.

2. Install second Site Controller.

   See *Installing a Second Site Controller on page 391*.

3. Restore the Site Controller Software on the second Site Controller.

   See the respective restoration manual (DIPS/DIPC systems) or *Service Manual* (DIPM system) for details on restoring the Site Controller software.

4. Configure E1 Links on the second Site Controller.

   See the respective restoration manual (DIPS/DIPC systems) or *Service Manual* (DIPM system) for details on how to configure the E1 links.

5. Configure CAN Bus on the second Site Controller.

   For detailed procedures, see the respective restoration manual (DIPS/DIPC systems) or *Service Manual* (DIPM system).

6. Load Ki’s into MTS.

   See the respective restoration manual (DIPS/DIPC systems) or *Service Manual* (DIPM system) for details on loading Ki's Into MTS.

7. Check the MTS post-restoration checks.

   For details, see the respective restoration manual (DIPS/DIPC systems) or *Service Manual* (DIPM system).

Important:

When adding a second Site Controller it will automatically become standby meaning that performance of Site Controller post-restoration checks will not be possible.

In order to perform a Site Controller Post-restoration check on the second Site Controller, the first Site Controller needs to be reset allowing the second Site Controller to become active leading to interruption of service for several seconds.

8 Configure Redundant Site Controller feature.

See *Configuring Redundant Site Controller on page 392*.

Installing a Second Site Controller

Procedure:

1 Wear an ESD strap and connect its cable to a verified good ground. This strap must be worn to prevent ESD damage to any components.

2 Remove the Site Controller Blind Plate.

3 Label the cables with labels included in the expansion kit.

4 Connect the Ethernet cables to the Base Radio(s) according to the scheme below:

Part no	Cable type	From	To
3066544B02	Ethernet cable	SC2 / BR4	BR4 / SC2
3066544B15	Ethernet cable	SC2 / BR1	BR1 / SC2
3066544B16	Ethernet cable	SC2 / BR2	BR2 / SC2
3066544B01	Ethernet cable	SC2 / BR3	BR3 / SC2

Note: At this stage only connect the cables to the Base Radios.

5 Strap the cables. Connect RF cable 3066543B10 to the GPS2 connector on the Junction Panel and let it hang. Catch the cable in the empty space where the Site Controller is to be assembled and temporarily fix it at the front.

6 Install the Site Controller. Use the handle to slide the unit into the chassis.

Important: Connect the ribbon cables at the rear before sliding the unit into the chassis. Be careful not to damage the cables when sliding the Site Controller into place.

7 Secure the Site Controller in the chassis with two M4X10 captive screws.

8 Connect the Ethernet cables previously attached to the Base Radio(s) to the Site Controller. Also connect the newly added Site Controller to the junction panel according to the scheme below:

Part no	Cable type	From	To
3066543B10	RF Cable	Junction Panel / E1	Y splitter
3066560B01		Y splitter	SC1 / E1
3066567B02		Y splitter	SC2 / E1

9 Connect RF cable 3066543B10 to GPS connector.

10 Connect the redundant control signal cable according to the scheme below:

Part no	Cable type	From	To
3066544B17	Redundant CTRL signal cable	SC1 / RedIn	SC2 / RedOut

Table continued…

3066544B17	Redundant CTRL signal cable	SC1 / RedOut	SC2 / RedIn

Note: Make sure to follow the color indications on both the cables as well as on the Site CONTROLLER.

11 Remove the Terminator from the CAN2 output on the Power Supply Unit and connect the CAN Bus cable according to the scheme below:

Part no	Cable type	From	To
3066544B03	CAN Bus cable	SC2 / CAN	PSU2 / CAN2

12 Connect the power cables to the MTS Power Supply Units.

Configuring Redundant Site Controller

Note: Redundant Site Controller feature is supported by MTS Software releases:

- MTS SPU R5.2_002.34 or later
- MTS SPU R6.0_001.12 or later

Note: On power up of the Standby Site Controller the Base Radios may dekey and reset. Base Radios will automatically recover and key up again within 20 seconds.

Process:

1 Perform Site Controller Hardware Pre-Checks.
See *Performing Site Controller Hardware Pre-Checks on page 392*.

2 Configure the Site Controller Configuration Files.
See *Configuring Site Controller Configuration Files on page 393*.

3 Configure Ethernet ports connecting the two Site Controllers.
See *Configuring Ethernet Ports on page 393*.

4 Configure the ID values of the Site Controllers.
See *Configuring Site Controller IDs on page 394*.

Performing Site Controller Hardware Pre-Checks

Procedure:

1 Ensure that both Site Controllers are correctly installed and are running identical software applications, Boot images and configuration files.

2 In order for the Redundant Site Controller feature to work correctly, the Site Controller and BR Boot1 version must be:

- TSC_RLJ_BOOT1–R06.40.07 or later for SC.
- BRC_RLJ_BOOT1–R06.40.05 or later for Base Radio.

Note: The Boot1 version can be checked on the Site Controller and BRs by resetting the Site Controller/BR and interrupting the startup sequence when prompted to go into Boot1 mode. The software version is displayed when entering Boot1 mode.

3 Check that the redundant Site Controller Ethernet Link cables are connected correctly, as shown in *Cable Connections*.

4 Proceed to *Configuring Site Controller Configuration Files on page 393* below.

Configuring Site Controller Configuration Files

Note: To check that the Site Controller configuration files have the Standby Site Controller Installed parameter enabled, follow the steps below.

Important: Remember to check the configuration of both Site Controllers.

Procedure:

1. Log onto the Site Controller Application MMI.
2. From the SC: prompt, run the command `display config`.
3. Check the output of the configuration and confirm if the Standby Site Controller parameter is enabled or not.
4. If no Standby Site Controller is enabled, upload the Active Site Controller configuration file.
5. Modify the configuration file in TESS to enable Standby Site Controller.
6. Download the new configuration file to the InActive Bank (set to use as next after reset).
7. Reset the Site Controller.
8. Confirm the configuration is correct.

Configuring Ethernet Ports

In order for the Redundant Site Controller feature to work correctly, the Ethernet ports used to connect the two Site Controllers need to be specifically configured. The correct IP addresses for each Site Controller must be as specified below.

Site Controller 1 (SC1)

- **eth0: 10.0.253.1**
- **eth1: 10.0.254.1**

Site Controller 2 (SC2)

- **eth0: 10.0.254.2**
- **eth1: 10.0.253.2**

Note: For an MTS using a single Site Controller, the Ethernet settings should be checked using the `ifconfig -a` command from the SC application prompt. From the output, confirm that the eth0 and eth1 ports are configured as expected. See Procedure below for more information on how to set SC IDs.

Procedure:

1. Log onto Boot1 of the Site Controller during startup.
2. From the prompt, run the command `spr inet/if/eth0`.
3. From the prompt, run the command `spr inet/if/eth1`.
4. Take note of the IP addresses and the MAC addresses.

   Note: If the IP addresses are set correctly (as stated in lists before this procedure), continue to **Step 8** below.

   Note: If the IP addresses are set incorrectly, they must be changed as follows in the next step.

5. Log onto Boot1 of the Site Controller.
6. From the prompt, run the command
   `spw inet/if/eth0 “dhcp:no addr:10.0.253.X mask:255.255.255.0 dev_name:tsec dev_unit:0 ethaddr:yy:yy:yy:yy:yy:yy mtu:1500”`

Note:

- **X** = 1 for SC1, and 2 for SC2
- **yy:yy:yy:yy:yy:yy** = the MAC address of the interface. Note that eth0 and eth1 have different MAC addresses.

7 From the prompt, run the command
```
spw inet/if/eth1 "dhcp:no addr:10.0.254.X mask:255.255.255.0 dev_name:tsec1
dev_unit:1 ethaddr:yy:yy:yy:yy:yy:yy mtu:1500"
```

Note:

- X = 1 for SC1, and 2 for SC2
- yy:yy:yy:yy:yy:yy = the MAC address of the interface. Note that eth0 and eth1 have different MAC addresses.

8 **Important:** Remember to check the IP settings on both SCs.

Configuring Site Controller IDs

Note: The Site Controllers must have different ID values configured. To check the SC id, follow the steps below.

Procedure:

1 Log onto the Site Controller Application MMI.
2 From the SC: prompt, run the command `id`.
3 An id value of either A or B is displayed.
4 Perform the same check on the second Site Controller.
5 If the IDs are the same, one of the ID values have to be changed. To do so, log onto the Site Controller Application MMI.

Note: It does not matter if it is the ID value of SC1 or SC2 that is changed, as long as they do not have the same ID value.

6 From the SC: prompt, run the command `id x` where **x** can be either A or B. Make sure to define a value different for the two Site Controllers.
7 Reset the Site Controller.

Expansion from Two-Channel to Four-Channel Cavity Combiner

It is possible to expand from a two-channel Cavity Combiner to a four-channel Cavity Combiner.

The order of an additional Cavity Combiner is dependent on the type of Cavity Combiner existing in the current configuration of the MTS 4 cabinet. There are type of the Cavity Combiner:

- Auto Tune Cavity Combiner (ATCC)
- Manual Tune Cavity Combiner (MTCC)

Note: The additional Cavity Combiner is delivered with the expansion kit that includes required equipment and cables.

Cable Connections

Figure 201: ATCC Cabling Diagram — MTS 4 with 1 TX Antenna before Expansion

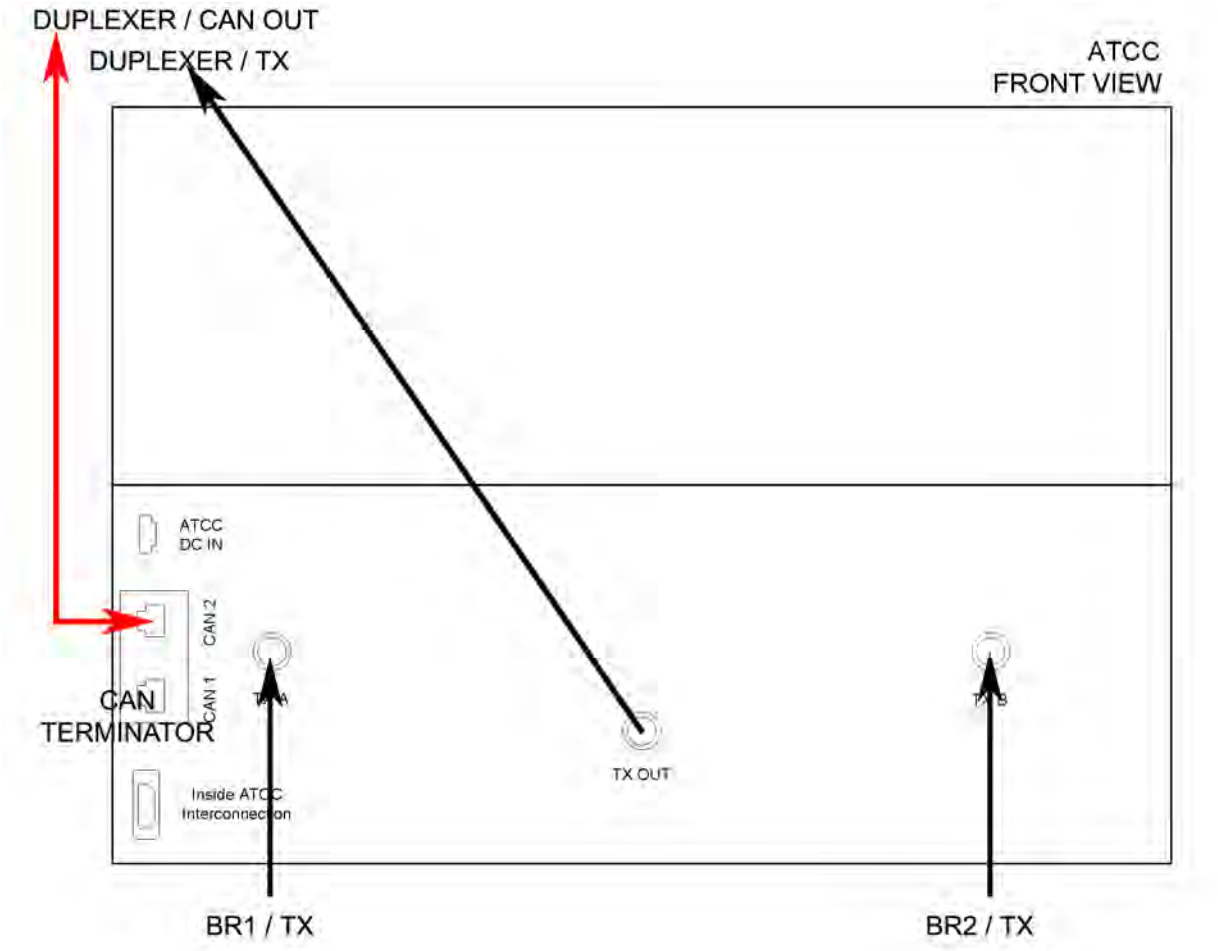

Figure 202: ATCC Cabling Diagram — MTS 4 with 1 TX Antenna after Expansion

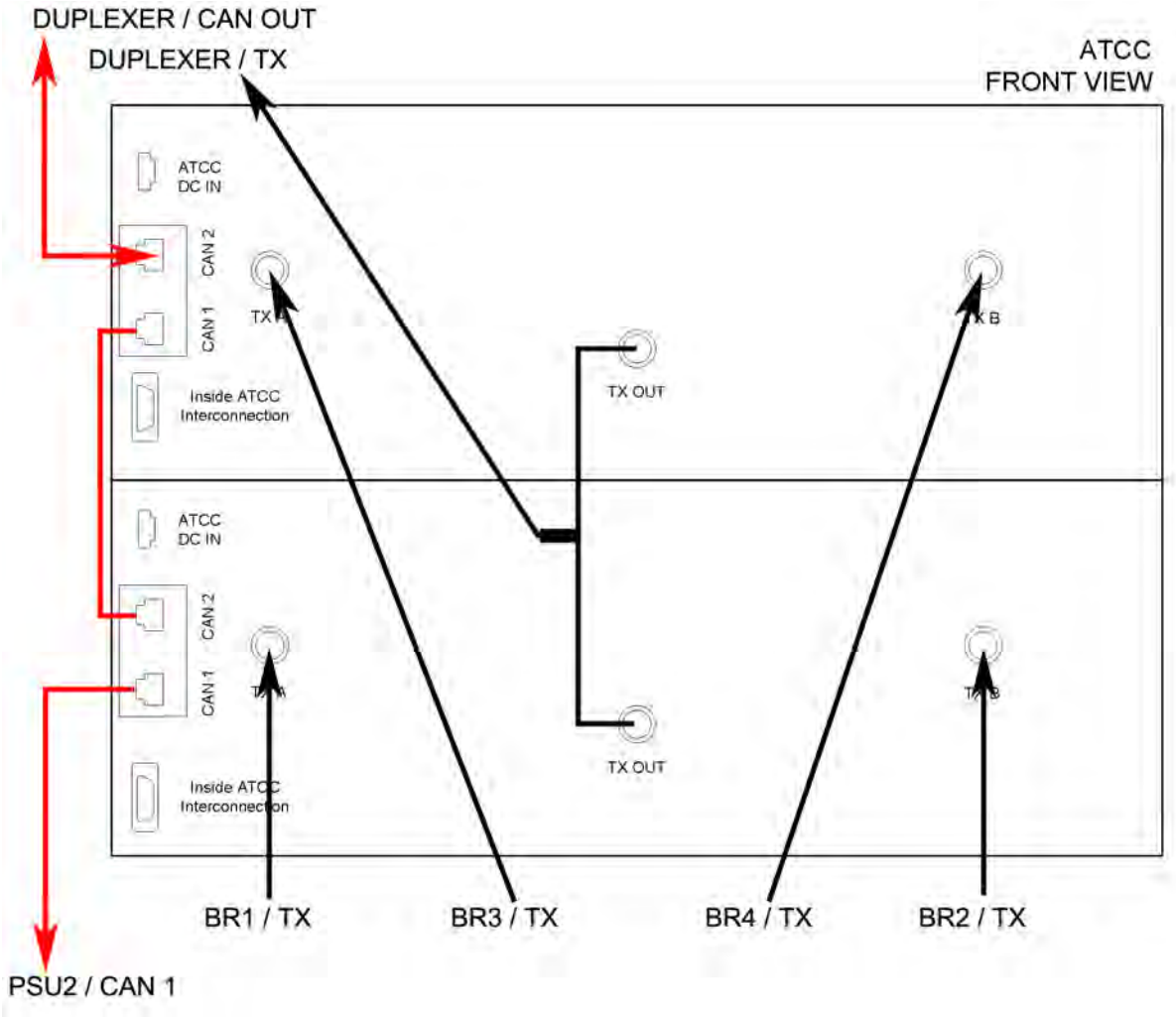

Adding the Four-Channel Cavity Combiner

Follow the process below to install the Cavity Combiner.

Note: Procedure is the same whether it is an Auto Tuned Cavity Combiner (ATCC) or a Manual Tuned Cavity Combiner (MTCC) being installed.

Caution: The cavity Combiner can weigh up to 11.8 kg (26 lbs.). Use caution when removing or installing Cavity Combiner into the equipment rack. Make sure the combiner is fully supported when free from mounting rails to avoid injury to personnel and equipment damage.

Process:

1 Install the new Cavity Combiner into the cabinet.
   See *Installing the Cavity Combiner into the Cabinet on page 397*.
2 Update the mapping list with the new unit TrackID.
   See *Updating the Mapping List with the New TrackID on page 256*.

Installing the Cavity Combiner into the Cabinet

Procedure:

1 Switch OFF the Power Supply Unit.

Note: Only applies for Auto Tuned Cavity Combiner (ATCC).

2 Remove the panel in front of where the additional Cavity Combiner is to be assembled.

3 Assemble bracket with 3 M6x10 screws.

4 Attach the DC cable to DC ATCC Out on the Power Supply Unit. Connect it to the DC socket on the control box on the Cavity Combiner.

Note: Only applies for Auto Tuned Cavity Combiner.

Note: Route the DC cable so it will be placed behind the additional Cavity Combiner.

5 Slide the Cavity Combiner into the cabinet.

6 Fasten the three screws (two on the left and one on the right) that hold the Cavity Combiner onto the brackets of the cabinet.

7 Attach the TX cables to the Base Radios.

8 Unplug the TX cable connected to ATCC 1 / TX Out connector and attach the TX Interconnect Harness to the ATCC 1 / TX Out and ATCC 2 / TX Out connectors. Connect the original cable to the TX Interconnect Harness.

9 Unplug the CAN Bus cable connected to ATCC 1 / CAN2 connector and attach it to ATCC 2 / CAN2 instead.

Action	From	To
Before	Duplexer / CAN Out	ATCC 1 / CAN2
After	Duplexer / CAN Out	ATCC 2 / CAN2

Note: When Manually Tuned Cavity Combiners are used, the CAN Bus is connected directly from Duplexer or PostFilter / CAN2 connector to Power Supply Unit 2 / CAN1 connector.

10 Connect the CAN Bus cable from the existing Cavity Combiner to the new Cavity Combiner according to the scheme below:

Part no	Cable type	From	To
3066544B09	CAN Bus cable	ATCC 1 / CAN2	ATCC 2 / CAN1
3066544B06	CAN Bus cable	ATCC 1 / CAN1	PSU2 / CAN1

Note: If a terminator is situated in the ATCC 1 / CAN1 connector before cabling according to scheme above, the terminator is removed.

11 Switch ON the Power Supply Unit.

Configuration

When the new Cavity Combiner has been installed, the mapping list needs to be updated with the new TrackID. For more information, see *Updating the Mapping List with the New TrackID on page 256*.

Hybrid Combiner Expansion

It is possible to expand the MTS 4 with additional Hybrid Combiner.

Note: The additional Hybrid Combiner is delivered with the expansion kit that includes required equipment and cables.

Installing an additional Hybrid Combiner

Follow the instructions below to install the additional Hybrid Combiner.

Procedure:

1. Switch OFF the Power Supply Unit.
2. Assemble the Bracket with the three M6x10 screws.
3. Fasten the two M4x10 screws that are to hold the Hybrid Combiner but do not tighten them fully.
4. Place the Hybrid Combiner on the bracket of the cabinet with the heat sink facing the side of the cabinet.
5. Slide the Hybrid Combiner at an angle ensuring that the lip at the back of the Hybrid Combiner is secured behind the bracket.
6. Tighten the two M4x10 screws to the bracket.
7. Attach the TX and antenna cables.
8. Switch ON the Power Supply Unit.

Configuration

No further configuration is needed when having installed the Hybrid Combiner.

Expansion from MTS 2 to MTS 4 Cabinet

It is possible to expand from an existing MTS 2 to MTS 4.

Note: When expanding from MTS 2 to MTS 4, an additional Base Radio is delivered with the expansion kit that includes required equipment and cables.

Expanding from MTS 2 to MTS 4

Follow the process below to extract the Module Cage from MTS 2 and assemble it into the expanding MTS 4 Cabinet.

Process:

1. Extract the Module Cage from MTS 2, see *Extracting the Module Cage from MTS 2 on page 398*.
2. Assemble the Module Cage in the MTS 4 cabinet, see *Assembling the Module Cage in the MTS 4 Cabinet on page 400*

Extracting the Module Cage from MTS 2

Procedure:

1. Remove all RF cables (RX, TX, and GPS if mounted).
2. Disconnect all cables between the module cage and the Junction Panel.
3. Remove any CAN Bus cables going to and from the Filter(s).

4 Remove the filter section by:

- Removing 6 pcs. M4 screws using TORX20.
- Remove the special Ground screw using a normal screw driver.

Note: Filter modules need to be removed in order to have access.

Note: The Ground screw should be reattached after removal of the filter section.

Figure 203: M4 Screw Position

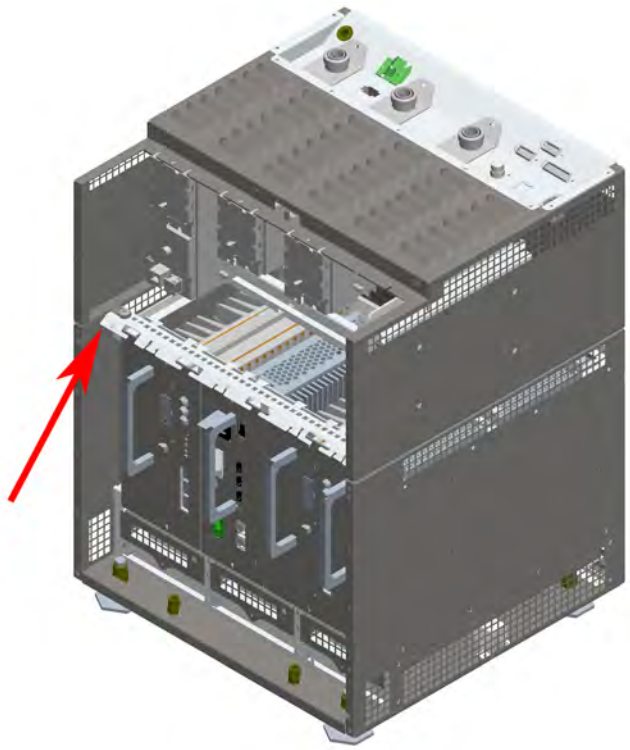

5 Remove bottom plate by removing the 20 pcs M3 TEXTRON screws using M1.5 Hex.

Figure 204: M3 Screw position

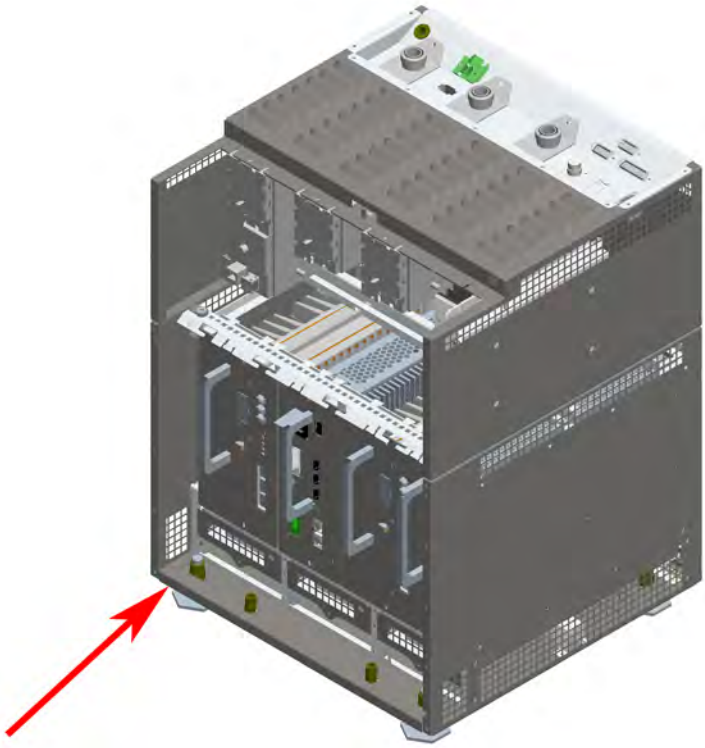

6 Remove the Ribbon cable from the Module cage.
7 Mount the two brackets to the Module cage using 10 pcs. M4 screws.
8 Bend in the area at the back of the Module Cages for Ribbon cables to be routed through later.

Assembling the Module Cage in the MTS 4 Cabinet

Procedure:

1 Remove the Module Cage Beauty Plate (if any).
2 Mount all cables going from the lower Module Cage in your specific configuration and fix them temporarily in the rack before mounting the air separator shelf and module cage.

Note: This would typically be:

- Ethernet cables from Base Radio(s) in lower Module Cage to SC in upper Module Cage (SC2).
- Ethernet cables from Base Radio(s) in upper Module Cage to SC in lower Module Cage (SC1).
- CAN Bus cables to and from Filters.

3 Assemble the Air Separator shelf above the existing Module Cage using four M6 screws.
4 Assemble the Module Cage extracted from MTS 2 in *Extracting the Module Cage from MTS 2 on page 398*.

Note: For more information regarding assembling of a module cage in the MTS 4 Cabinet, see Adding Additional Module Cage to MTS 4.

5 Connect the power supply cables and optional backup battery cables.
6 Connect the Ethernet cables and CAN Bus cables mounted in Step 2 above.
7 Switch ON the Power Supply Unit.
8 Check the LED indicators to verify the PSU is operating correctly.

Configuration

No configuration in itself is needed for the module cage, but the Power Supply Unit needs to be configured and this is described in *Updating the Mapping List with the New PSU TrackID on page 303*.

Installation and configuration of additional Base Radios are described separately in *Additional Base Radio for Existing Module Cage in MTS 4 on page 381*.

Furthermore, if an additional Site Controller is ordered as a separate expansion kit, it needs to be installed and configured, see *Redundant Site Controller on page 389*.

Redundant XHUB Controller

It is possible to add an redundant XHUB Controller to an MTS 4 Expansion Cabinet.

Note: In order to be able to expand to a redundant XHUB Controller, a redundant Site Controller **must** be present in the MTS 4 Prime Cabinet.

The additional XHUB Controller is delivered with the expansion kit that includes required equipment and cables.

Adding a Redundant XHUB Controller

Procedure:

1. Wear an ESD strap and connect its cable to a verified good ground. This strap must be worn to prevent ESD damage to any components.
2. Remove XHUB Controller blind plate if such exist in the upper module cage of the MTS 4 Expansion Cabinet.
3. Label the cables with labels included in the expansion kit.
4. Connect the Ethernet cables to the Base Radio(s) according to the scheme below:

Part no	Cable type	From	To
3066544B02	Ethernet cable	BR4 / SC2	XHUB2 / BR4
3066544B15	Ethernet cable	BR1 / SC2	XHUB2 / BR1
3066544B16	Ethernet cable	BR2 / SC2	XHUB2 / BR2
3066544B01	Ethernet cable	BR3 / SC2	XHUB2 / BR3

Note:

Ethernet cables stated above derives from the Base Radio(s) in the MTS 4 Expansion Cabinet.

At this stage only connect the cables to the Base Radio(s).

5. Strap the cables.
6. Install the additional XHUB Controller. Use handle to slide the unit into the chassis.

Important: Connect the ribbon cables at the rear before sliding the unit in to the chassis.

7. Secure the XHUB Controller in the chassis with two M4X10 captive screws.
8. Connect the Ethernet cables to the unit as tagged earlier.
9. Connect the 3066544B12 cable that derives from the upper Site Controller in the MTS 4 Prime Cabinet (Exp Cab connector).
10. Reconnect the power cables to the MTS Power Supply Units.

Note: If prime MTS4 is configured with Ethernet site link (Link1 Link2 RJ45 connector at prime rack junction panel are assy), connect cable 30015009004 (black plug) to lower XHUB connector ‘AUX1’. Use the RJ45 coupler 3066562B01 to connect the other side of 30015009004 cable from MTS4 Expansion to MTS4 prime cable 30015009003 (going to ‘Link2’ junction panel connector).

Configuration

No configuration is needed.

Chapter 16

MTS 4 Outdoor Enclosure

The MTS 4 outdoor enclosure is designed to accommodate an MTS 4 base station and it is designed to withstand rough environment and many years of service. Basis is a welded steel frame with dismountable side panels with protected double gaskets for protecting the sealed environment inside.

The MTS 4 outdoor enclosure is described in detail in *MTS 4 Outdoor Enclosure*.

Appendix A

Field Replaceable Units (FRUs)

Field Replaceable Units for MTS LiTE

Table 129: Available FRUs for MTS LiTE on page 405 lists the available Field Replaceable Units (FRUs) for MTS LiTE and *Table 130: Other FRUs for MTS LiTE Available from After Market Operations (AMO) on page 405* lists the other FRUs for MTS LiTE available from After Market Operations (AMO).

Table 129: Available FRUs for MTS LiTE

FRU	Description
GMCN4737A	Site Controller
GMTX4325A	High Power Base Radio 350 – 380 MHz, TEDS compatible
GMTF4690A	High Power Base Radio 806 – 870 MHz, TEDS compatible
GMTX4331A	High Power Base Radio 380 – 470 MHz, TEDS compatible
GMTX4334A	Low Power Base Radio 380 – 470 MHz, TEDS compatible
WATX4342A	High Power Base Radio 350 MHz – 379 MHz
WATX4340A	Low Power Base Radio 380 MHz – 470 MHz
WATX4341A	High Power Base Radio 380 MHz – 470 MHz
GMLF4706A	High Power Base Radio 806 MHz – 870 MHz
WAPN4335A	Power Supply Unit

Table 130: Other FRUs for MTS LiTE Available from After Market Operations (AMO)

Part Number	Description
WALN4381A	Fan kit
9166516A07	Duplexer Rx 385 MHz – 390 MHz
9166516A15	Duplexer Rx 395 MHz – 400 MHz
9166516A08	Duplexer Rx 410 MHz – 415 MHz
9166516A09	Duplexer Rx 412.5 MHz – 417.5 MHz
9166516A10	Duplexer Rx 415 MHz – 420 MHz
9166516A11	Duplexer Rx 450 MHz – 455 MHz

Table continued…

Part Number	Description
9166516A12	Duplexer Rx 455 MHz - 460 MHz
9166516A13	Duplexer Rx 452.5 MHz - 457.5 MHz
9166516A14	Duplexer MTS2 RX 806 MHz – 825 MHz
9166515A05	Pre Selector Rx 380 MHz – 385 MHz MTS 2
9166515A06	Pre Selector Rx 382.5 MHz – 387.5 MHz MTS 2
9166515A07	Pre Selector Rx 385 MHz – 390 MHz MTS 2
9166515A15	Pre Selector Rx 395 MHz - 400 MHz
9166515A08	Pre Selector Rx 410 MHz – 415 MHz MTS 2
9166515A09	Pre Selector Rx 412.5 MHz – 417.5 MHz MTS 2
9166515A10	Pre Selector Rx 415 MHz – 420 MHz MTS 2
9166515A11	Pre Selector Rx 450 MHz – 455 MHz MTS 2
9166515A12	Pre Selector Rx 455 MHz - 460 MHz
9166515A13	Pre Selector Rx 452.5 MHz - 457.5 MHz
9166515A14	Pre Selector MTS2 RX 806 MHz - 825 MHz
GMDN1172A	Remote GPS Antenna MOBRA ROHS Compliant (GPS RF Antenna with integrated GPS Receiver)
GMDN5007A	GPS Antenna (Internal GPS Receiver), Post Mount N Male Con
3066564B01	REMOTE GPS CABLE 40 m
3066564B02	REMOTE GPS CABLE 150 m
3066564B03	REMOTE GPS CABLE 600 m
5185151Y02	Site Controller Lithium Battery
0166559A01	STANDARD FLOOR MOUNT SET MTS
GMKN4747A	Ethernet Site Link Retrofit Kit MTS2

Figure 205: Position of Modules in MTS LiTE Cabinet

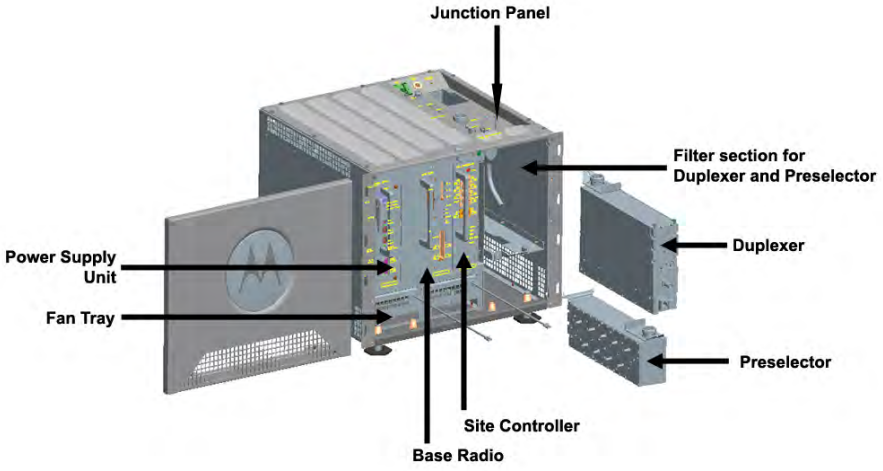

Field Replaceable Units for MTS 2

Table 131: Available FRUs for MTS 2 on page 407 lists the available Field Replaceable Units (FRUs) for MTS 2 and *Table 132: Other FRUs for MTS 2 Available from After Market Operations (AMO) on page 407* lists the other FRUs for MTS 2 available from After Market Operations (AMO).

Important: If the MTS 2 is already pre-wired for the second BR, order the BR FRU only. If the MTS 2 is not pre-wired for the second BR, an expansion BR kit is required.

Table 131: Available FRUs for MTS 2

FRU	Description
GMCN4737A	Site Controller
GMTX4325A	High Power Base Radio 350 – 380 MHz, TEDS compatible
GMTF4690A	High Power Base Radio 806 – 870 MHz, TEDS compatible
GMTX4333A	High Power Base Radio 380 – 470 MHz, TEDS compatible
GMTX4334A	Low Power Base Radio 380 – 470 MHz, TEDS compatible
WATX4342A	High Power Base Radio 350 MHz – 379 MHz
WATX4340A	Low Power Base Radio 380 MHz – 470 MHz
WATX4341A	High Power Base Radio 380 MHz - 470 MHz
GMLF4706A	High Power Base Radio 806 MHz – 870 MHz
GMWD4513A	Low Power Base Radio 260 MHz – 275 MHz
WAPN4335A	Power Supply Unit

Table 132: Other FRUs for MTS 2 Available from After Market Operations (AMO)

Part Number	Description
WATX4379A	Hybrid Combiner 400 MHz
WATF4380A	Hybrid Combiner TX 851 MHz – 870 MHz
GMLD4641A	Hybrid Combiner 260 MHz – 275 MHz
GMLF4711A	Hybrid Combiner 932 MHz – 942 MHz
WALN4381A	Fan kit
9166516A07	Duplexer Rx 385 MHz - 390 MHz
9166516A15	Duplexer Rx 395 MHz – 400 MHz
9166516A08	Duplexer Rx 410 MHz - 415 MHz
9166516A09	Duplexer Rx 412.5 MHz – 417.5 MHz
9166516A10	Duplexer Rx 415 MHz – 420 MHz
9166516A11	Duplexer Rx 450 MHz – 455 MHz
9166516A12	Duplexer Rx 455 MHz - 460 MHz

Table continued…

Part Number	Description
9166516A13	Duplexer Rx 452.5 MHz - 457.5 MHz
9166516A01	Duplexer Rx 351 MHz – 356 MHz
9166516A02	Duplexer Rx 353 MHz – 358 MHz
9166516A03	Duplexer Rx 372 MHz – 377 MHz
9166516A04	Duplexer Rx 374 MHz – 379 MHz
9166516A05	Duplexer Rx 380 MHz – 385 MHz
9166516A06	Duplexer Rx 382.5 MHz – 387.5 MHz
91015003001	Duplexer (Hi Pwr) Rx 260 MHz – 266 MHz
91015006001	Duplexer (Lo Pwr) Rx 260 MHz – 266 MHz
9166516A14	Duplexer MTS2 RX 806 MHz – 825 MHz
9166516A16	Duplexer Rx 917 MHz – 922 MHz
9166516A17	Duplexer Rx 922 MHz – 927 MHz
9166515A01	Pre Selector Rx 351 MHz – 356 MHz
9166515A02	Pre Selector Rx 353 MHz – 358 MHz
9166515A03	Pre Selector Rx 372 MHz – 377 MHz
9166515A04	Pre Selector Rx 374 MHz – 379 MHz
9166515A05	Pre Selector Rx 380 MHz – 385 MHz MTS 2
9166515A06	Pre Selector Rx 382.5 MHz – 387.5 MHz MTS 2
9166515A07	Pre Selector Rx 385 MHz – 390 MHz MTS 2
9166515A15	Pre Selector Rx 395 MHz - 400 MHz
9166515A08	Pre Selector Rx 410 MHz – 415 MHz MTS 2
9166515A09	Pre Selector Rx 412.5 MHz – 417.5 MHz MTS 2
9166515A10	Pre Selector Rx 415 MHz – 420 MHz MTS 2
9166515A11	Pre Selector Rx 450 MHz – 455 MHz MTS 2
9166515A12	Pre Selector Rx 455 MHz - 460 MHz
9166515A13	Pre Selector Rx 452.5 MHz - 457.5 MHz
91015004001	Pre Selector (Hi Pwr) Rx 260 MHz – 266 MHz
91015007001	Pre Selector (Low Pwr) Rx 260 MHz – 266 MHz
9166515A14	Pre Selector MTS2 RX 806 MHz – 825 MHz
9166515A16	Pre Selector Rx 917 MHz – 922 MHz
9166515A17	Pre Selector Rx 922 MHz - 927 MHz
GMDN1172A	Remote GPS Antenna MOBRA ROHS Compliant (GPS RF Antenna with integrated GPS Receiver)
GMDN5007A	GPS Antenna (Internal GPS Receiver), Post Mount N Male Con
3066564B01	REMOTE GPS CABLE 40 m

Table continued…

Part Number	Description
3066564B02	REMOTE GPS CABLE 150 m
3066564B03	REMOTE GPS CABLE 600 m
5185151Y02	Site Controller Lithium Battery
0166559A01	STANDARD FLOOR MOUNT SET MTS
GMDN2206A	MTS2 LVD RELAY RETROFIT KIT
GMKN4747A	Ethernet Site Link Retrofit Kit MTS2

Figure 206: Position of Modules in MTS 2 Cabinet

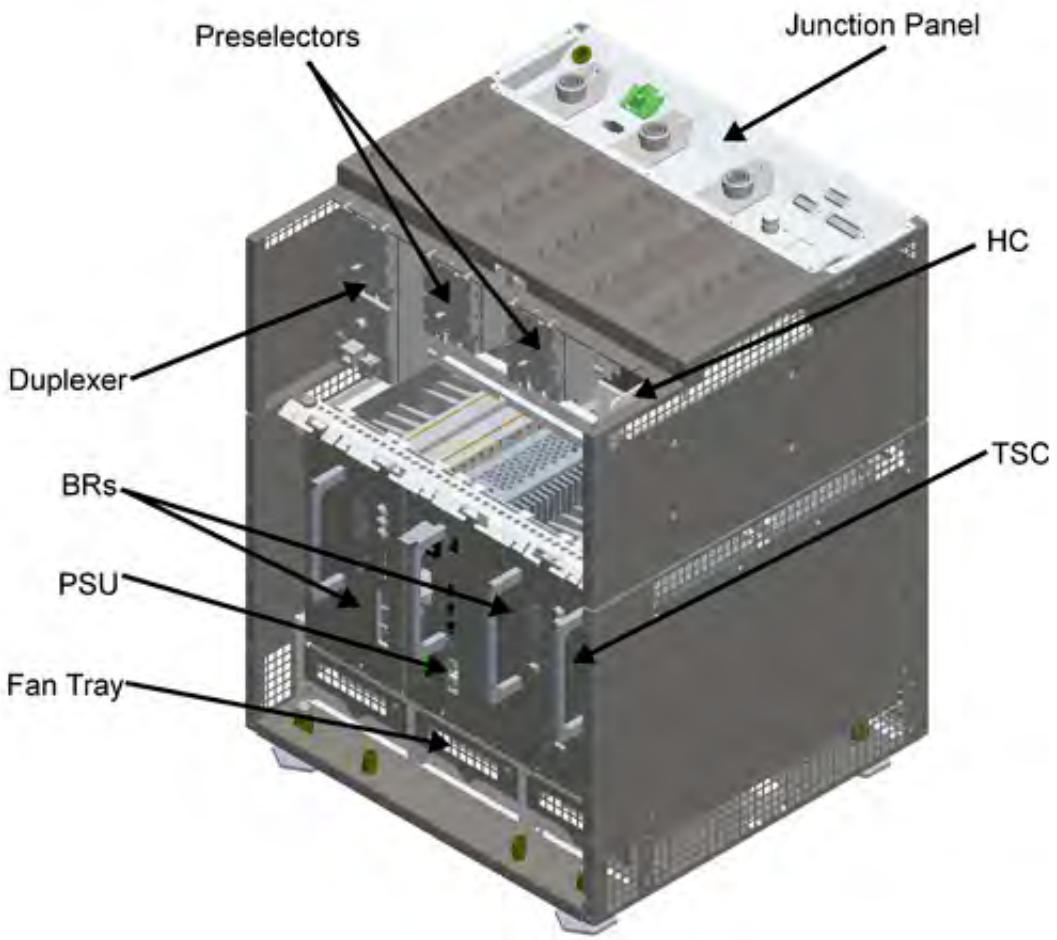

Field Replaceable Units for MTS 4

Table 133: Available FRUs for MTS 4 on page 410 lists the available FRUs for MTS 4 and *Table 134: Other Field Replaceable Units for MTS 4 Available from After Market Operations (AMO) on page 410* lists other FRUs for MTS 4 available from AMO.

Important: If the MTS 4 is already pre-wired for the second BR, order the BR FRU only. If the MTS 4 is not pre-wired for the second BR, an expansion BR kit is required.

Table 133: Available FRUs for MTS 4

FRU	Description
GMCN4737A	Site Controller
GMTX4325A	High Power Base Radio 350 – 380 MHz, TEDS compatible
GMTF4690A	High Power Base Radio 806 – 870 MHz, TEDS compatible
GMTX4333A	High Power Base Radio 380 – 470 MHz, TEDS compatible
GMTX4334A	Low Power Base Radio 380 – 470 MHz, TEDS compatible
WATX4342A	High Power Base Radio 350 MHz – 379 MHz
WATX4340A	Low Power Base Radio 380 MHz – 470 MHz
WATX4341A	High Power Base Radio 380 MHz – 470 MHz
GMWD4513A	Low Power Base Radio 260 MHz – 275 MHz
GMLF4706A	High Power Base Radio 806 MHz – 870 MHz
WAPN4335A	Power Supply Unit

Table 134: Other Field Replaceable Units for MTS 4 Available from After Market Operations (AMO)

Part Number	Description
WATX4379A	Hybrid Combiner 400 MHz
GMLD4641A	Hybrid Combiner 260 MHz – 275 MHz
WATF4380A	Hybrid Combiner TX 851 MHz – 870 MHz
WALN4381A	Fan kit
GMDN1172A	Remote GPS Antenna MOBRA ROHS Compliant (GPS RF Antenna with integrated GPS Receiver)
GMDN5007A	GPS Antenna (Internal GPS Receiver), Post Mount N Male Con
9166519A05	MTCC (2 chan.) 360 MHz – 370 MHz
9166519A06	MTCC (2 chan.) 380 MHz – 400 MHz
9166519A07	MTCC (2 chan.) 410 MHz – 433 MHz
9166519A08	MTCC (2 chan.) 460 MHz – 470 MHz
9166519A09	MTCC (2 chan.) TX 851 MHz – 870 MHz
9166519A01	ATCC (2 chan.) 360 MHz – 370 MHz
9166519A02	ATCC (2 chan.) 380 MHz – 400 MHz
9166519A03	ATCC (2 chan.) 410 MHz – 430 MHz
9166519A04	ATCC (2 chan.) 460 MHz – 470 MHz
91015008001	ATCC (2 chan.) 260 MHz – 275 MHz
9166519A10	ATCC (2 chan.) TX 851 MHz – 870 MHz

Table continued…

Part Number	Description
9166512B17	Duplexer Rx 351 MHz – 356 MHz (supplier Fungu) Replaces Power Wave 9166512A17 duplexer.
9166512B18	Duplexer Rx 353 MHz – 358 MHz (supplier Fungu) Replaces Power Wave 9166512A18 duplexer.
9166512B19	Duplexer Rx 372 MHz – 377 MHz (supplier Fungu) Replaces Power Wave 9166512A19 duplexer.
9166512B20	Duplexer Rx 374 MHz – 379 MHz (supplier Fungu) Replaces Power Wave 9166512A20 duplexer.
9166512B01	Duplexer Rx 380 MHz – 385 MHz (supplier Fungu) Replaces Power Wave 9166512A01 duplexer.
9166512B02	Duplexer Rx 382.5 MHz – 387.5 MHz (supplier Fingu). Replaces Power Wave 9166512A02 duplexer.
9166512B03	Duplexer Rx 385 MHz – 390 MHz (supplier Fungu) Replaces Power Wave 9166512B03 duplexer.
9166512B10	Duplexer Rx 410 MHz – 415 MHz (supplier Fungu) Replaces Power Wave 9166512A10 duplexer.
9166512B11	Duplexer Rx 412.5 MHz – 417.5 MHz (supplier Fungu) Replaces Power Wave 9166512A11 duplexer.
9166512B12	Duplexer Rx 415 MHz – 420 MHz (supplier Fungu) Replaces Power Wave 9166512A12 duplexer.
9166512B14	Duplexer Rx 450 MHz – 455 MHz (supplier Fungu) Replaces Power Wave 9166512A14 duplexer.
91015003001	Duplexer (Hi Pwr) 260 MHz – 266 MHz
91015006001	Duplexer (Lo Pwr) 260 MHz – 266 MHz
9166512B21	Duplexer MTS4 RX 806 MHz – 825 MHz (supplier Fungu) Replaces Power Wave 9166512A21 duplexer.
9166511B17	Post Filter Tx 361 MHz – 366 MHz (supplier Fingu) Replaces Power Wave 9166511A17 filter.
9166511B18	Post Filter Tx 363 MHz – 368 MHz (supplier Fingu) Replaces Power Wave 9166511A18 filter.

Table continued…

Part Number	Description
9166511B19	Post Filter Tx 382 MHz – 387 MHz (supplier Fingu) Replaces Power Wave 9166511A19 filter.
9166511B20	Post Filter Tx 384 MHz – 389 MHz (supplier Fingu) Replaces Power Wave 9166511A20 filter.
9166511B01	Post Filter Tx 390 MHz – 395 MHz (supplier Fingu) Replaces Power Wave 9166511A01 filter.
9166511B02	Post Filter Tx 392.5 MHz – 397.5 MHz (supplier Fingu) Replaces Power Wave 9166511A02 filter.
9166511B03	Post Filter Tx 395 MHz – 400 MHz (supplier Fingu) Replaces Power Wave 9166511A03 filter.
9166511B10	Post Filter Tx 420 MHz – 425 MHz (supplier Fingu) Replaces Power Wave 9166511A10 filter.
9166511B11	Post Filter Tx 422.5 MHz – 427.5 MHz (supplier Fingu) Replaces Power Wave 9166511A11 filter.
9166511B12	Post Filter Tx 425 MHz – 430 MHz (supplier Fingu) Replaces Power Wave 9166511A12 filter.
9166511B14	Post Filter Tx 460 MHz – 465 MHz (supplier Fingu) Replaces Power Wave 9166511A14 filter.
91015005001	Post Filter (Hi Pwr) Tx 269 MHz – 275 MHz
9166511B21	Post Filter MTS4 TX 851 MHz – 870 MHz
9166510B01	Pre Selector Rx 380 MHz – 385 MHz MTS 4 (supplier Fingu) Replaces Power Wave 9166510A01 filter.
9166510B02	Pre Selector Rx 382,5 MHz – 387,5 MHz MTS 4 (supplier Fingu). Replaces Power Wave 9166510A02 filter.
9166510B03	Pre Selector Rx 385 MHz – 390 MHz MTS 4 (supplier Fingu) Replaces Power Wave 9166510A03 filter.
9166510B10	Pre Selector Rx 410 MHz – 415 MHz MTS 4 (supplier Fingu) Replaces Power Wave 9166510A10 filter.
9166510B11	Pre Selector Rx 412.5 MHz – 417.5 MHz MTS 4 (supplier Fingu) Replaces Power Wave 9166510A11 filter.

Table continued…

Part Number	Description
9166510B12	Pre Selector Rx 415 MHz – 420 MHz MTS 4 (supplier Fingu) Replaces Power Wave 9166510A12 filter.
9166510B20	Pre Selector Rx 351MHz 356 MHz MTS 4 (supplier Fingu) Replaces Power Wave 9166510A20 filter.
9166510B21	Pre Selector Rx 353 MHz – 358 MHz MTS 4 (supplier Fingu) Replaces Power Wave 9166510A21 filter.
9166510B22	Pre Selector Rx 372 MHz – 377 MHz MTS 4 (supplier Fingu) Replaces Power Wave 9166510A22 filter.
9166510B23	Pre Selector Rx 374 MHz – 379 MHz MTS 4 (supplier Fingu) Replaces Power Wave 9166510A23 filter.
9166510B17	Pre Selector Rx 450 MHz – 455 MHz MTS 4 (supplier Fingu) Replaces Power Wave 9166510A17 filter.
91015004001	Pre Selector (Hi Pwr) 260 MHz – 266 MHz
91015007001	Pre Selector (Lo Pwr) 260 MHz – 266 MHz
9166510B24	Pre Selector MTS4 RX 806 MHz – 825 MHz (supplier Fingu) Replaces Power Wave 9166510A24 filter.
5185151Y02	Site Controller Lithium Battery
01015026001	STANDARD FLOOR MOUNT SET MTS
GMDN2207A	MTS4 LVD RELAY RETROFIT KIT
GMKN4745A	Ethernet Site Link Retrofit Kit MTS4

Table 135: Available Field Replaceable Units for MTS 4 Expansion Cabinet on page 413 lists the available FRUs and *Table 136: Other Field Replaceable Units for MTS 4 Expansion Cabinet Available from After Market Operations (AMO) on page 413* lists the other FRUs for MTS 4 Expansion Cabinet available from After Market Operations (AMO).

Table 135: Available Field Replaceable Units for MTS 4 Expansion Cabinet

Kit Number	Description
GMLN4689A	XHUB Controller

Table 136: Other Field Replaceable Units for MTS 4 Expansion Cabinet Available from After Market Operations (AMO)

Part Number	Description
0166502N08	RX Splitter (350 MHz – 825 MHz)
01015008001	RX Splitter (260 MHz – 266 MHz)
GMKN4744A	Ethernet Site Link Retrofit Kit MTS4 Expansion Cabinet

Table continued…

Part Number	Description
GMCN4735A	Redundant XHUB Controller and cable kit

Figure 207: Position of Modules in MTS 4 cabinet

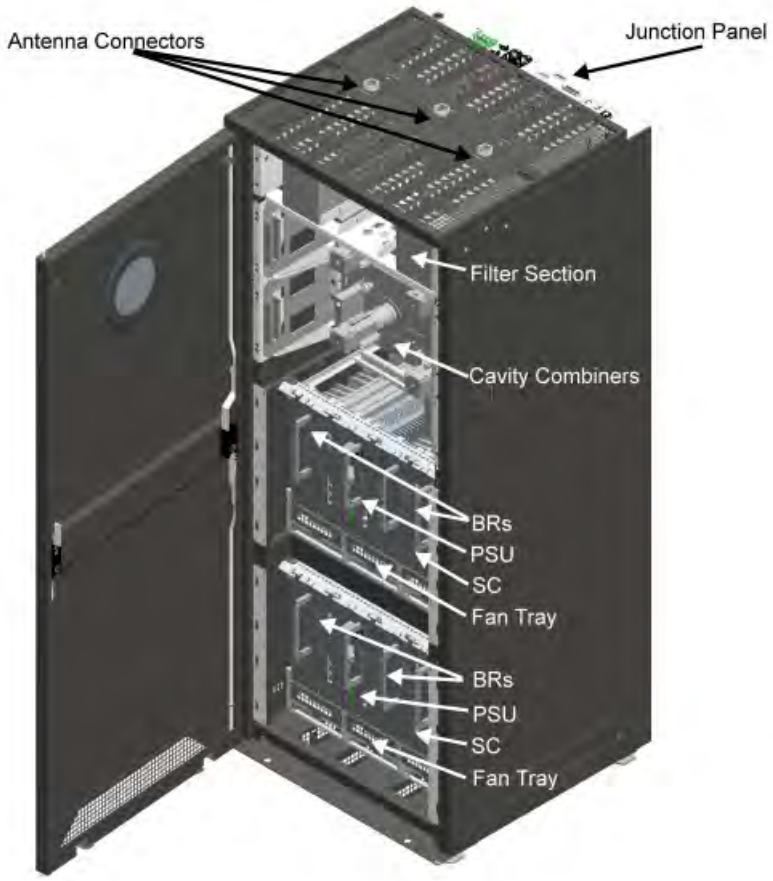

Figure 208: Position of Modules in Expansion Cabinet

Surge Arrestors and Suppliers

Three types of surge arrestors should be used in the MTS site:

1. AC Power and X.21/E1 Interface Surge Arrestor
2. Antenna Surge Arrestor
3. Lightning Arrestor

AC Power and E1/X.21 Interface Surge Arrestors

Surge arrestors shall be locally procured. The selected items should be specifically designed for the application and meet all local regulations.

Supplier addresses:

- **DITHA**

  Suedfeldtrasse 7

  D - 30453 Hannover

  Germany

  Telephone: +49 (0)511 - 21260

Telefax: +49 (0)511 - 2108302

- **DEHN GmbH Co KG**

  Postfach 1640

  D - 92306 Neumarkt

  Germany

  Telephone: +49 (0)9181 - 9060

  Telefax: +49 (0)9181 - 906100

Antenna Surge Arrestors

The recommended antenna surge arrestors are manufactured by Polyphaser Inc.

POLYPHASER, INC.

PO Box 9000

Minden, NV 89423

North Latin America:

Toll free: 800-325-7170

Telephone: + 775-782-2511

Telefax: + 775-782-4476

Internet: http://www.polyphaser.com

Recommended models

- 260 MHz MTS antenna (transmit/receive) - VHF50HD (Motorola P/N DSVHF50HD)
- 400 MHz MTS antenna (transmit/receive) - VHF50HD (Motorola P/N DSVHF50HD)
- 800 MHz MTS antenna 7/16 DIN (transmit/receive) - TSX-DFF-BF (Motorola P/N DSTSXDFFBF)
- 800 MHz MTS antenna (transmit/receive) - DSXL (Motorola P/N DSDSXL)
- MTS antenna (receive only) - IS-B50HN-C2 (Motorola P/N RRX4027)
- GPS Antenna - DGXZ + 06NFNF-A (Motorola P/N DSDGXZ06NFNFA)
- Remote GPS Antenna - IX-3L2DC48 (Motorola P/N DSIX3L2DC48)

Note: The IX- series of the arrestor units from Polyphaser are combined units that are applicable for data and power lines.

Lightning Arrestors

Lightning Arrestors are available from Following European Supplier:

HOFI GmbH Co KG

Wittenbacherstrasse 12

D - 91614 Moenchsroth

Germany

Telephone: +49 (0)9853 - 1003

Telefax: +49 (0)9853 - 1005

Appendix B

Planned Maintenance Inspection (PMI)

To assist maintenance of Dimetra products, Motorola publishes advice for recommended Planned Maintenance Inspections (PMI). For each Motorola Part Number, the Inspection Schedule indicates whether any PMI action is required/recommended, the regularity of the recommended/required action, and a brief description of the activity. The Inspection Schedule also indicates Motorola's recommended PMI testing activities that should be carried out as part of the PMI Schedule.

Always read the PMI Inspection Schedule in conjunction with the relevant Motorola or Motorola 3rd party suppliers Standard Product Manuals and any Technical Information Bulletins (TIBs), which include the methods of access and other useful information.

In additional to the Planned Maintenance Inspections, Motorola recommends to run the basic functional test every 24 months. These functional tests should include RF power, RF frequency, and Bit Error Rate measurements.

Motorola recommends regular site visits for other inspections, for example, site physical security checks, generator maintenance, and so on.

Motorola also recommends the antennas and PSU/Battery/UPS tests and functional inspection according to the respective manufacturers suggestions.

Caution: Ensure the ventilation holes and grilles on the are not covered.

Note: In the configuration with the backup battery: Check the backup battery charged by the MTS in accordance to the manufacturers instructions.

Table 137: Required Planned Maintenance Inspection Actions

Component	Required PMI Action
Site Controller Lithium backup battery	Replace every 8 years.
Heat sinks and interior of the MTS	Perform periodic inspections which require cleaning occasionally due to the buildup of dust. The frequency of this inspection is dependent upon the local environment and is more important when the MTS is operating at a high ambient temperature.

Appendix C

Static Precautions and ESD Strap

This Appendix covers the following topics:

- *Static Sensitive Precautions on page 419*
- *ESD Wrist Strap Safety Precautions on page 419*

Static Sensitive Precautions

The static grounding wrist strap (Motorola P/N 4280385A59) must always be used when handling any board or module within the MTS. Many of the boards or modules used in the MTS equipment are vulnerable to damage from static charges.

Extreme care must be taken while handling, shipping, and servicing these boards or modules. To avoid static damage, observe the following precautions:

- Before handling, shipping, and servicing MTS equipment, connect a wrist strap to the grounding clip on the equipment cabinet which is located at the bottom of the cabinet and marked with a yellow label. This discharges any accumulated static charges.

  Warning: Use extreme caution when wearing a conductive wrist strap near sources of high voltage. The low impedance provided by the wrist strap also increases the danger of lethal shock should accidental contact with high voltage sources occur.

- Avoid touching any module, board circuitry, including any connector pins with your hands.
- Before removing a board or module, disconnect its individual power supply first.
- Avoid carpeted areas, dry environments, and certain types of clothing (silk, nylon, and so on) during service or repair due to the possibility of static buildup.
- Apply power to the circuit under test before connecting low impedance test equipment (such as pulse generators). When testing is complete, disconnect the test equipment before power is removed from the circuit under test.
- Be sure to ground all electrically powered test equipment. Connect a ground lead (-) from the test equipment to the board or module before connecting the test probe (+). When testing is complete, remove the test probe first, then remove the ground lead.
- Lay all circuit boards and modules on a static dispersive surface (a proper antistatic map) when removed from the system. This mat will be connected to ground through a high resistance element.
- Never use non-conductive material for packaging modules being transported. All modules should be wrapped with anti-static packaging material. Replacement modules shipped from the factory are packaged in a conductive material, for example, antistatic bag.

ESD Wrist Strap Safety Precautions

The ESD socket built into the cabinet housing provides a point to which a wire from a wrist strap can be connected. This is for ESD (electrostatic discharge) protection.

ESD wrist strap use is critical in the following cases:

- Replacement of any module inside a box, which includes service of any modules in a base radio.
- Service of receiver multicoupler (RMC).

Caution:

The RMC is a relatively open mechanical design and ESD protection is critical when servicing this module. In case of field repair, first connect the cable to the Duplexer or Preselector, then connect to the RMC. NEVER do this the other way round.

NEVER connect or disconnect the cable that connects the Duplexer and Preselector RX outputs to the inputs of the RMC without using a correctly earthed ESD wrist strap.

Figure 209: MTS LiTE ESD Strap Connection

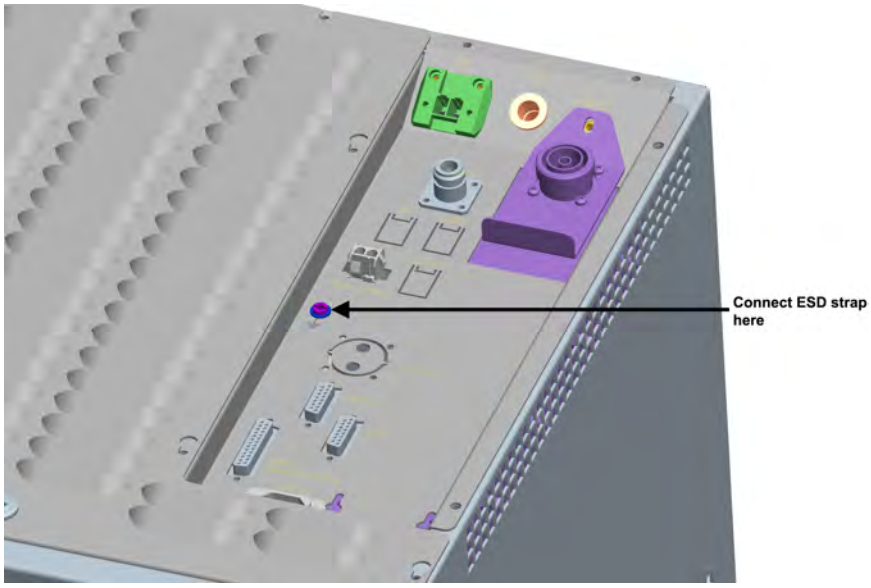

Figure 210: MTS 2 and MTS 4 ESD Strap Connection

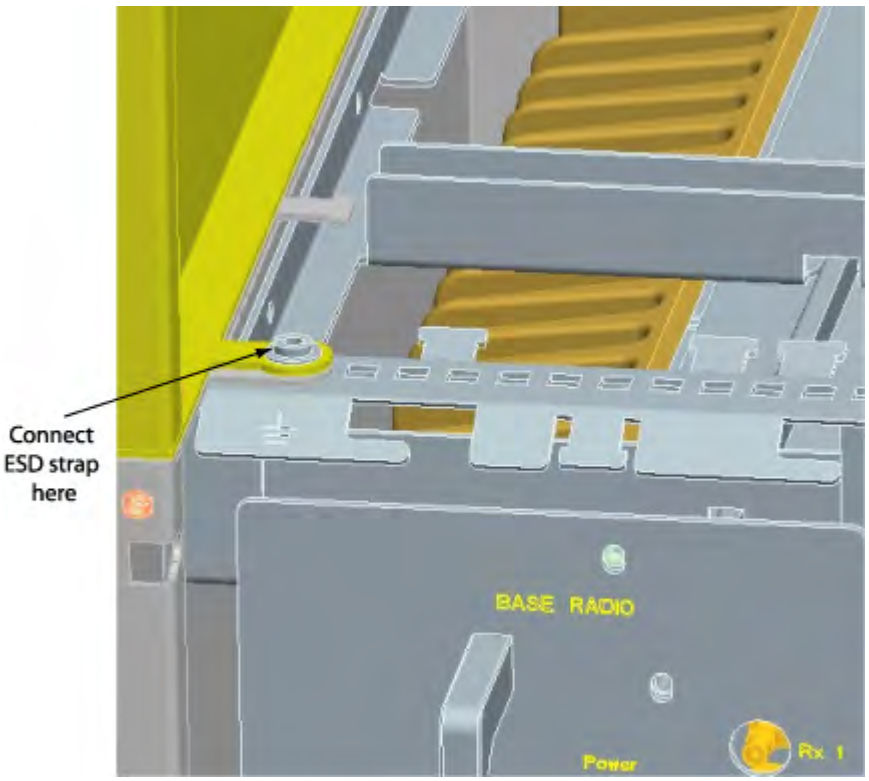

Appendix D

TETRA/Dimetra Acronyms

The table explains the acronyms used throughout this manual and in the Dimetra System and is not system release specific. Therefore not all terms may be relevant for a specific system or release.

Table 138: TETRA/Dimetra Acronyms

Item	Description
A-ISSI	Assigned ISSI
A/V	Anti-Virus
AAA	Authentication, Authorization, and Accounting
ABO	Automatic Busy Override
ACC	Adjacent Control Channel
ACCH	Associated Control Channel
ACELP	Algebraic Code Excited Linear Prediction
AD	Active Directory
ADM	Alias Database Manager (part of CENTRACOM Gold Server)
AEB	Ambassador Electronics Bank
AEI	Audio Expansion Interface
AGC	Automatic Gain Control
AI	Air Interface Additional Identity
AIE	Air Interface Encryption
AIMI	Ambassador Interface Multiplex Interface
AIS	Alias Integrated Solution Archiving Interface Server
ALOM	Advanced Lights Out Management
AMB	Ambassador Board
AMS	Alert Management System
API	Application Programming Interface
APN	Access Point Name

Table continued…

Item	Description
ARP	Address Resolution Protocol
AS	Alias Server
ASC	Automatic Synchronization Configuration
ASIC	Application Specific Integrated Circuit
ASSI	Alias Short Subscriber Identity
ATCC	Auto Tune Cavity Combiner
ATG	Announcement Talkgroup
ATIA	Air Traffic Information Access
ATM	Asynchronous Transfer Mode
ATR	Air Traffic Router
ATS	Alphanumeric Text Service
AuC	Authentication Centre
AVC	Aggregated Virtual Circuit.
BCCH	Broadcast Control Channel
BER	Bit Error Rate
BERT	Bit Error Rate Test
BIC	Barring of Incoming Calls
BIM	Base Interface Module
BLT	Bulk Loader Tool
BNCH	Broadcast Network Channel
BOC	Barring of Outgoing Calls
bps	bits per second
BR	Base Radio
BRC	Base Radio Controller
BS	Billing Service
BSCH	Broadcast Synchronisation Channel
BTS	Base Transceiver System
CAD	Computer Aided Dispatch
CADI	Computer Aided Dispatch Interface
CAI	Common Air Interface
CAS	Channel Associated Signalling Child AntiVirus Server
CAT	Coverage Acceptance Test
CATP	Coverage Acceptance Test Procedure

Table continued…

Item	Description
CBR	Constant Bit Rate
CC	Command Control
CC	Crypto Card
CCC	Crypto Communications Controller
CCGW	Conventional Channel Gateway
CCH	Control Channel
CCI	Command Control Interface
CCITT	Consultative Committee for International Telegraph and Telephone
CCK	Common Cipher Key
CCM	Channel Control Module
CCMS	Customer Configuration Management System
CDM	Configuration Database Manager (part of CENTRACOM Gold Server)
CDR	Call Detail Record
CE	Crypto Engine
CEB	Central Electronics Bank
CEN	Customer Enterprise Network
CES	CENTRACOM Elite Server
CG	Charging Gateway
CHS	Cluster Hot Standby, Equivalent to Synchronised Standby
CIE	Console Interface Electronics
CIS	Center for Internet Security
CK	Cipher Key
CKEK	Common Key Encryption Key
CLIP	Calling Line Identification Presentation
CLIR	Calling/Connected Line Identification Restriction
CMG	Crypto Management Group
CMS	Cable Management System
CMSU	Central Mass Storage Unit
CNE	Central Network Equipment
CNI	Customer Network Interface
COAM	Customer Owned And Operated
COIM	Console Operator Interface Module
CORBA	Common Object Request Broker Architecture
CORI	Console Operated Remote Interface
CoU	Class of Usage

Table continued…

Item	Description
cPCI	compact Peripheral Component Interconnect
CPS	Customer Programming Software
CRC	Cyclic Redundancy Check
CRHN	Control Room Head Number
CSMA/CD	Carrier Sense Multiple Access/Collision Detect
CSMS	Core Security Management Server
CSV	Comma Separated Values
CVC	Constituent Virtual Circuit
CVO	Clear Voice Override
CWR	Cooperative WAN Routing
CZC	Controlling Zone Controller
DAOS	Data Add-On Services
DAQ	Delivered Audio Quality
DAT	Digital Audio Tape
DB	Data Base
DBP	Downstream Billing Processor
DC	Dispatch Console (D5.5SER and backward) Domain Controller (D6.0SER and forward)
DCE	Data Communication Equipment
DCK	Derived Cipher Key
DDI	Data Distribution Interface
DDP	Disabled Dialling Pattern
DG	Data Gateway
DEM	Digital Elevation Model
DGNA	Dynamic Group Number Assignment
DIB	Data Interface Box
DID	Direct Inbound Dialling
DL	Discreet Listening
DLCI	Data Link Connection Identifier
DM	Direct Mode Operation
DM-SCK	Direct Mode Static Cipher Key
DMO	Direct Mode Operation
DMZ	DeMilitarised Zone
DNS	Domain Name Services

Table continued…

Item	Description
DPM	Digital Power Meter
DSP	Digital Signal Processing
DSU	Data Service Unit
DSC	Digital Service Cross Connect
DTE	Data Terminal Equipment Data Traffic Estimator
DTM	Digital Terrain Model
DTMF	Dual Tone Multi Frequency
DVD	Digital Versatile Disc
E2E	End-to-End Encryption Key Variable Loader
E2E KVL	End-to-End Encryption Key Variable Loader
EAS	Environmental Alarm System
EBTS	Enhanced Base Transceiver System
EC	Electronic Codebook Echo Canceller
ECK	Encryption Cipher Key
ECN	Exclusion Class Number
ECTA	Extended Console Talkgroup Assignment
ECU	Environmental Conditioning Unit
EEPROM	Electrically Erasable Programmable Read Only Memory
EIA	Electronic Industries Association
EOL	End Of Life
ESD	Electrostatic Discharge
ETG	Enhanced Telephone Gateway
ETSI	European Telecommunications Standards Institute
FACCH	Fast Associated Control Channel
FAS	Frame Alignment Signal
FAT	Factory Acceptance Test
FIFO	First in, first out
FIPS	Federal Information Processing Standards
FLM	Formatted Logical Message
FNE	Fixed Network Equipment
FRAD	Frame Relay Access Device
FRE	Field Replaceable Entity

Table continued…

Item	Description
FRU	Field Replaceable Unit
FSSN	Fleet Specific Subscriber Number
FSU	Fault Sense Unit
FT	Fault Tolerant
FTP	File Transfer Protocol
FV	FullVision
FVS	FullVision Server
FW	Firewall
G-HLR	Group Home Location Register
GAS	General Application Server
GBN	Ground Based Network
GCK	Group Cipher Key
GCKN	Group Cipher Key Number
GMS	Group Message Server
GOS	Grade Of Service
GPIOM	General Purpose Input/Output Module
GPRS	General Packet Radio Service
GPS	Global Positioning System
GSKO	Group Session Key for OTAR
GSSI	Group Short Subscriber Identity
GTP	GPRS Tunneling Protocol
GTSI	Group TETRA Subscriber Identity
GUI	Graphical User Interface
HDD	Hard Disc Drive
HDLC	High level Data Link Control
HLA	Home Location Area
HLR	Home Location Register
HPOV	Hewlett-Packard OpenView
HSRP	High Speed Redundancy Protocol
HSSI	High Speed Serial Interface
HZM	Home Zone Map
IDC	Initialization Default Configuration
I-HLR	Individual subscriber unit HLR
ICCS	Integrated Command and Control System
ICMP	Internet Control Message Protocol

Table continued…

Item	Description
ID	Identifier or Identification
IDSS	Intrusion Detection System Sensor
IEC	International Electro-technical Committee
IEEE	Institute of Electrical and Electronic Engineers.
IFM	Interzone Fault Management
IGMP	Internet Group Management Protocol
iLO	Integrated Lights-Out
INM	Integrated Network Manager (FullVision)
IOP	Inter OPerability
IP	Internet Protocol
IRR	Instant Recall Recorder
ISA	Industry Standard Architecture
ISDN	Integrated Services Digital Network
ISI	Inter System Interface
ISSI	Individual Short Subscriber Identity
ITC	Inter TETRA Connection
ITSI	Individual TETRA Subscriber Identity
ITU	International Telecommunications Union
IVD	Integrated Voice and Data
IVN	InterVening Network
IZ	Interzone
IZAC	Interzone Audio Channel
IZCP	Interzone Control Path
IZNM	Interzone Network Manager
K	Authentication Key
KAG	Key Association Group
KEK	Key Encryption Key
KID	Key Identification
KMF	Key Management Facility
KMM	Key Management Message
KSG	Key Stream Generator
KSS	Key Stream Segments
KVL	Key Variable Loader
KVM	Keyboard, Video, and Mouse
LA	Local Area

Table continued…

Item	Description
LAN	Local Area Network
LED	Light Emitting Diode
LMI	Link Management Interface
LNA	Low Noise Amplifier
LOMI	Logging Operator Multiplex Interface
LORI	Logging Recorder Interface
LLR	Local Logging Recorder
LST	Local Site Trunking
LULC	Land Use Land Cover
LZC	Large Zone Core
MAC	Media Access Control
MBTS	Mini Base Transceiver System
MCC	Mobile Country Code
MCCH	Main Control Channel
MDG	Mobile Data Gateway
MDM	Preside Multiservice Data Manager
MER	Message Error Rate
MFR	Multilink Frame Relay
MG	Multigroup
MGCK	Modified Group Cipher key
MGEG	Motorola Gold Elite Gateway
MIB	Management Information Base
MiBAS	Motorola integrated Billing and Administration System
MLE	Mobile Link Entity
MMC	Microsoft Management Console
MMI	Man Machine Interface
MNC	Mobile Network Code
MND	Motorola Networks Division
MNR	Motorola Network Router
MO	Mobile Originated
MOSES	Make Our System Easier to Support
MoU	Memorandum of Understanding
MS	Mobile Station
MSEL	Multiselect
MSFC	Multilayer Switch Feature Card

Table continued…

Item	Description
MSK	Minimum Shift Keying
MSO	Mobile Switching Office
MT	Mobile Terminated
MTBF	Mean Time Between Failures
MTIG	Motorola Telephone Interconnect Gateway
MTS	Motorola Transceiver System
MTU	Maximum Transmission Unit
MUX	MultipleXer
MZS	Multi-Zone System
NACK	Negative status acknowledgment
NAM	Network Analyzer Module
NAT	Network Address Translation
NI	Network Interface
NIB	Network Interface Barrier
NIC	Network Interface Card (Ethernet Card)
NIS	Network Information Service
NM	Network Management
NMC	Network Management Centre
NMT	Network Management Terminal
NNM	Network Node Manager.
NOC	Network Operations Centre
NS	Network Security
NSC	Normal Synchronization Configuration
NSM	Juniper NetScreen-Security Manager
NSMS	Network Security Management Subsystem
NT	New Technologies. A Microsoft Windows environment Network Termination
NTMS	Network Transport Management Server
NTP	Network Time Protocol
NTS	Network Time Server
OOB	Out-Of-Band
OS	Operating System
OSI	Open Systems Interconnect
OSPF	Open Shortest Path First

Table continued…

Item	Description
OSS	Operations Support Subsystem
OTAK	Over-The-Air-Key management
OTAR	Over-The-Air-Rekeying protocol
P-ISSI	Permanent ISSI
P25	APCOs Project 25
PA	Power Amplifier
PABX	Private Automatic Branch Exchange
PCI	Peripheral Component Interconnect
PCM	Pulse Code Modulation
PD	Packet Data
PDCH	Packet Data Channel
PDG	Packet Data Gateway
PDN	Packet Data Network
PDR	Packet Data Router
PDS	Packet Data Service
PDU	Protocol Data Unit
PEI	Peripheral Equipment Interface
PIM-SM	Protocol Independent Multicast-Sparse Mode
PIN	Personal Identification Number
PKI	Public Key Infrastructure
PN	Peripheral Network
PN Router	Peripheral Network Router
PPC	Pre-emptive Priority Call
PPP	Point-to-Point Protocol
PrC	Provisioning Center
PRC	Primary Reference Clock
PRNM	Private Radio Network Management.
PROM	Programmable Read Only Memory.
PSK	Phase Shift Keying.
PSM	Public Safety Microphone.
PSTN	Public Switched Telephone Network
PSU	Power Supply Unit
PTT	Push-To-Talk
PVC	Permanent Virtual Circuit
QOS	Quality Of Service

Table continued…

Item	Description
QSIG	Q-reference point Signalling
R-ISSI	Radio ISSI
RADIUS	Remote Authentication Dial-in User Service
RAG	Resource Allocation Group.
RAID	Redundant Array of Independent Disks
RAM	Random Access Memory
RAPI	Radio Applications Programming Interface
RAS	Remote Access Server
RCM	Radio Configuration Manager
RDP	Remote Desktop Protocol
RF	Radio Frequency
RFDS	Radio Frequency Distribution System
RIP	Routing Information Protocol.
RMC	Receiver Multicoupler.
RME	Resource Manager Essentials
RNG	Radio Network Gateway
RNI	Radio Network Infrastructure
ROCI	Remote Operator Console Interface
RoHS	Reduction of Hazardous Substances
RP	Rendezvous Point
RSM	Remote Speaker Microphone (for a Mobile Station)
RSSI	Radio Signal Strength Indicator
RSS	Radio Service Software
RSU	Recent System User
RTC	Real Time Clock
RUA	Radio User Assignment
RUI	Radio User Identity
RX	Receiver
SF	Store and Forward feature
SAC	Subscriber Access Control
SAI	Session Authentication Information
SACCH	Slow Associated Control Channel
SAS	Serial Attached SCSI Symantec AntiVirus™ Server

Table continued…

Item	Description
SATA	Serial ATA
SATN	System Architecture and Transport Network
SAV	Symantec AntiVirus Client
SAVCE	Symantec AntiVirus Corporate Edition
SC	Site Controller
SCI	Serial Communications Interface
SCK	Static Cipher Key
SCK-TMO	Static Cipher Key for Trunked Mode Operation
SCKN	Static Cipher Key Number
SCO	Site Capacity Option
SD	Short Data
SDR	Short Data Router
SDS	Short Data Service
SDS - TL	Short Data Service Transport Layer
SDTS	Short Data Transport Service
SEK	Signalling Encryption Key
SFS	Store and Forward Server
SGSN	Serving GPRS Support Node
SIB	Service Interface Barrier
SIM	Subscriber Identity Module
SIMM	Single In-Line Memory Module
SIT	System Integration and Test
SMS	Secure Manager Subsystem
SMSO	Shared MSO
SNDCP	Sub Network Dependent Convergence Protocol
SNMP	Simple Network Management Protocol
SOC	Security Operations Centre
SONET	Synchronous Optical Network
SPAS	System Parent Anti Virus Server
SPI	Smart Phone Interface
SRAM	Static Random Access Memory
SR	System Release
SRI	Site Reference ISA
SS7	Signalling System 7
SSC	Symantec System Center™

Table continued…

Item	Description
SSI	Short Subscriber Identity.
SSL	Secure Socket Layer
SSS	System Statistics Server
STM	System Timer Module
SVC	Switched Virtual Circuit
SWC	Site Wide Call
SWDL	Software Download feature
SWDLM	Software Download Manager
SwMI	Switching and Management Infrastructure
SWTG	Site Wide Talkgroup
SZC	Small Zone Core
TCH	Traffic Channel.
TCP/IP	Transmission Control Protocol / Internet Protocol.
TDMA	Time Division Multiple Access
TE	Terminal Equipment
TEI	TETRA Equipment Identity
TEK	Traffic Encryption Key
TESS	TETRA BTS Service Software
TETRA	TErrestrial Trunked RAdio
TG	Talkgroup
TI	Telephone Interconnect
TIA	Telecommunications Industries Association
TIG	Telephone Interconnect Gateway
TLAN	Transitional Local Area Network
TM-SCK	Trunked Mode Static Cipher Key
TMI	TETRA Management Identity
TMO	Trunked Mode Operation
TMSS	Transmit Mode Selector Switch
TNM	Transport Network Management
TNPS	Transport Network Performance Server
TPI	Talking Party Identification
TSC	TETRA Site Controller
TSI	TETRA Subscriber Identity
TX	Transmitter
Tx-I	Transmit Inhibit

Table continued…

Item	Description
UCL	User Configuration of Logging interfaces
UCM	User Configuration Manager Universal Crypto Module
UCS	User Configuration Server
UDP	User Data Protocol
UI	Router Manager User Interface
UKEK	Unique Key Encryption Key
UPS	Uninterruptible Power Supply
UTC	Universal Time Coordinated
V+D	Voice and data
VDTM	Virus Definition Transport Method
VICP	Very Intelligent Communications Processor
VLAN	Virtual Local Area Network
VLR	Visitor Location Register
VM	Virtual Machine
VOX	Voice Operated Control
VPN	Virtual Private Network
VPN-1	Checkpoints VPN implementation.
VRF	VPN Routing and Forwarding
VRRP	Virtual Router Redundancy Protocol
VU	Voice Unit
WAN	Wide Area Network
WEEE	Waste Electrical and Electronic Equipment
XML	eXtensible Mark-up Language
ZC	Zone Controller
ZCM	Zone Configuration Manager
ZDS	Zone Database Server
ZLM	Zone Link Multiplexer
ZM	Zone Manager
ZMS	Zone Manager Subsystem
ZSS	Zone Statistics Server