3 Loosen the all the locking knobs of the MTCC, see the figure below (the design of the MTCC may look slightly different), and turn the tuning knobs counter clock wise as many turns as possible.

Figure 159: Tuning Knob and Locking Knob

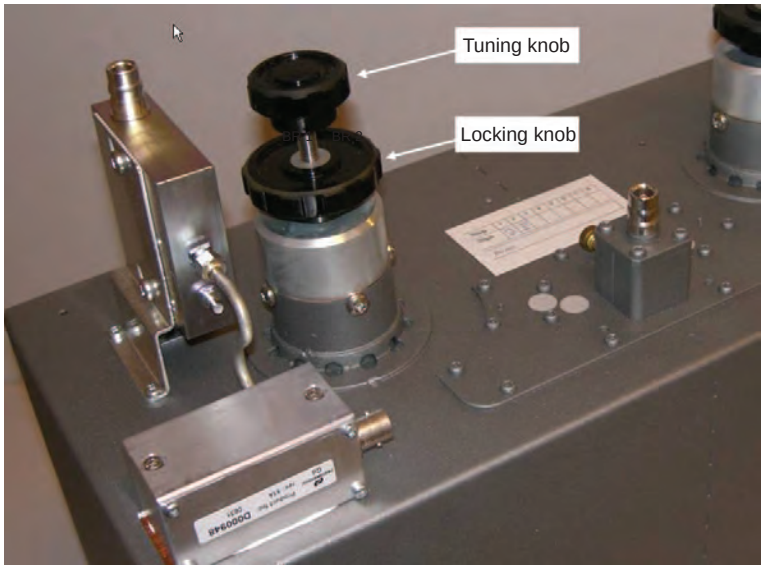

4 Power up the BTS and let all BRs key up. Observe that the TX LEDs of all BRs shine.

5 Connect the service computer to the service port of Base Radio 1 and log on. The service port connector is located on the front panel of the Base Radio module. The default password is `motorola`.

6 At the `BR)` prompt, type: `dekey` This command stops all RF transmission.

7 Repeat step 5 and 6 for all BRs.

8 Observe on the power meter that all BRs have dekeyed and that all TX LEDs are off.

9 Connect the service computer to the service port of Base Radio 1.

10 At the `BR)` prompt, type: `key`. After a while the TX LED of the BR will turn on and the power meter will show the BR output power minus the loss of the MTCC and the duplex filter.

11 Slowly turn the tuning knob of the cavity to be tuned, until the power level displayed at the power meter is at its absolute maximum.

12 Tighten the locking knob.

13 Repeat step 11 and 12 until the power level is still at its absolute maximum with the locking knob firmly tightened.

14 Dekey the BR.

15 Repeat step 9 to 14 for all remaining BRs connected to the MTCC.

7.4 Expansion Cabinet RFDS

The Expansion Cabinet uses a high-power RFDS intended for up to four high power Base Radios in addition to the Base Radios in the MTS 4 Prime cabinet. The RFDS in the Expansion Cabinet is made up of the following:

- Up to three RX Splitters – a passive device functioning as an extension for the Receiver Multi Coupler function of the Duplexer/Preselector in MTS 4 to support eight Base Radios. It is connected

to the Exp Cabinet connector on the Duplexer/Preselector present in the MTS 4 Prime Cabinet giving the right signal level for the RX-Splitter.

- Cavity Combiners – combining of eight carriers on 1 TX antenna.

Table 84: MTS 4 Expansion Cabinet RF Configurations on page 310 lists the RF configurations of the MTS 4 Expansion Cabinet. In the table, *Low Power* is valid for both 400 MHz and 260 MHz versions of the Expansion Cabinet, while *High Power* is valid for both 400 MHz and 800 MHz versions of the Expansion Cabinet.

Table 84: MTS 4 Expansion Cabinet RF Configurations

RF Configuration	Max Power (W)		Cavity Combiner	RX Splitter
	Low Pwr	High Pwr		
1 – 2 BRs				
TX/RX on 2 ant.	10	25	1	2
TX/RX on 2 ant., RX on 1 ant.	10	25	1	3
TX on 2 ant., RX on 2 ant.	10	25	1	2
TX on 2 ant., RX on 3 ant.	10	25	1	3
TX/RX on 1 ant., RX on 1 ant	8	20	1 + phasing harness	2
TX/RX on 1 ant., RX on 2 ant.	8	20	1 + phasing harness	3
TX on 1 ant., RX on 2 ant.	10	20	1 + phasing harness	2
TX on 1 ant., RX on 3 ant.	10	20	1 + phasing harness	3
3 – 4 BRs				
TX/RX on 2 ant.	10	25	2 (comb)	2
TX/RX on 2 ant., RX on 1 ant.	10	25	2 (comb)	3
TX on 2 ant., RX on 2 ant.	10	25	2 (comb)	2
TX on 2 ant., RX on 3 ant.	10	25	2 (comb)	3
TX/RX on 1 ant., RX on 1 ant.	8	20	2 (comb) + phasing harness	2
TX/RX on 1 ant., RX on 2 ant.	8	20	2 (comb) + phasing harness	3
TX on 1 ant., RX on 2 ant.	8	20	2 (comb) + phasing harness	2

RF Configuration	Max Power (W)		Cavity Combiner	RX Splitter
	Low Pwr	High Pwr		
TX on 1 ant., RX on 3 ant.	8	20	2 (comb) + phasing harness	3

NOTICE: For 260 MHz version of MTS there are no phasing harness configurations, so please disregard from these in Table 84: MTS 4 Expansion Cabinet RF Configurations on page 310.

Figure 160: Expansion Cabinet with Single Diversity

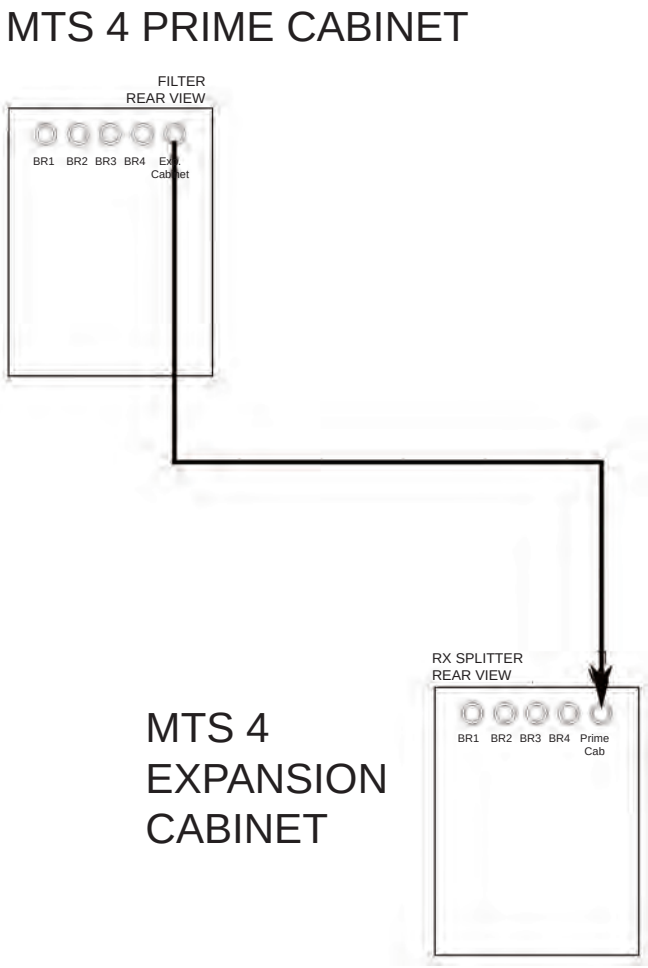

Figure 161: Expansion Cabinet with Dual Diversity

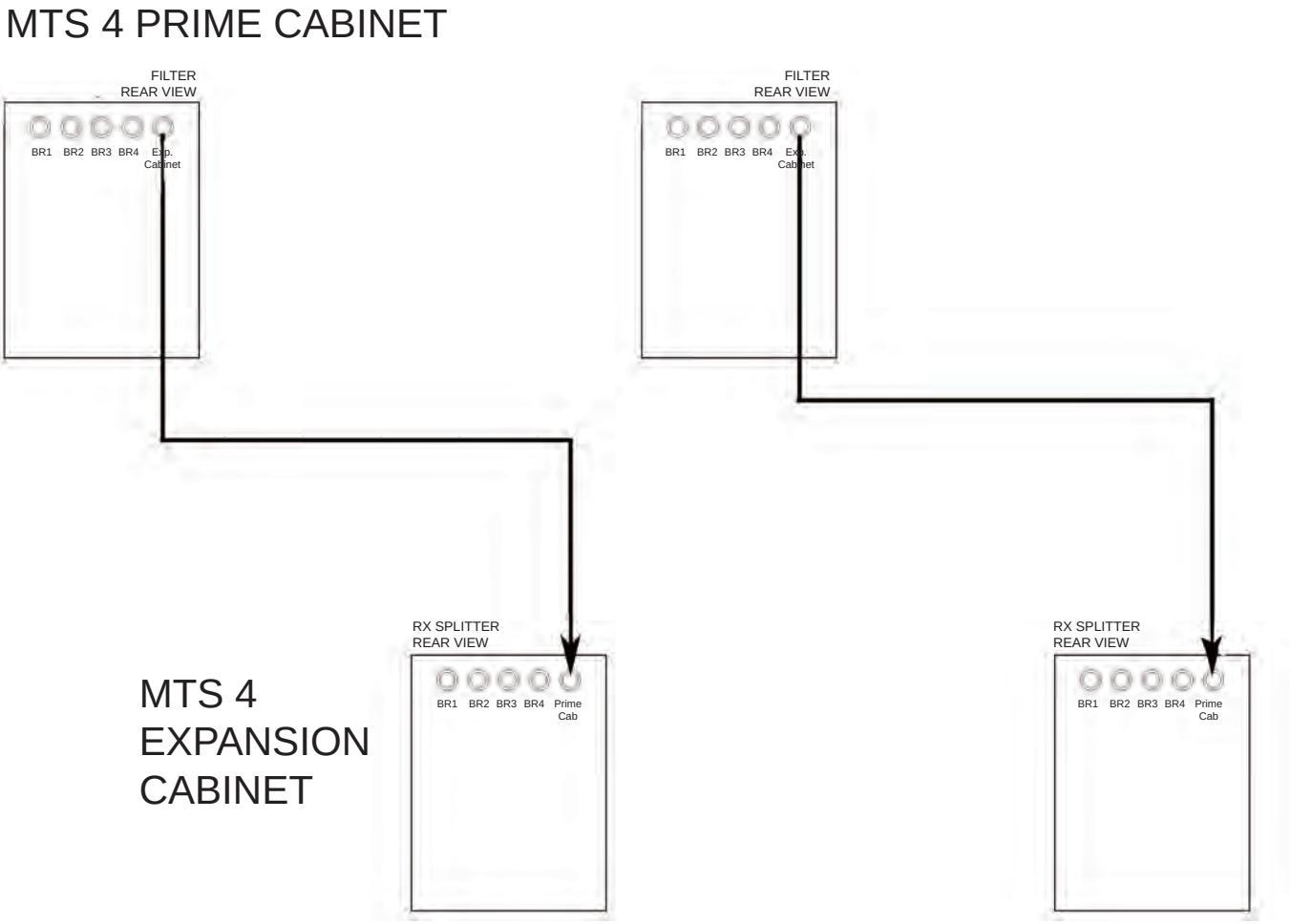

Figure 162: Expansion Cabinet with Triple Diversity

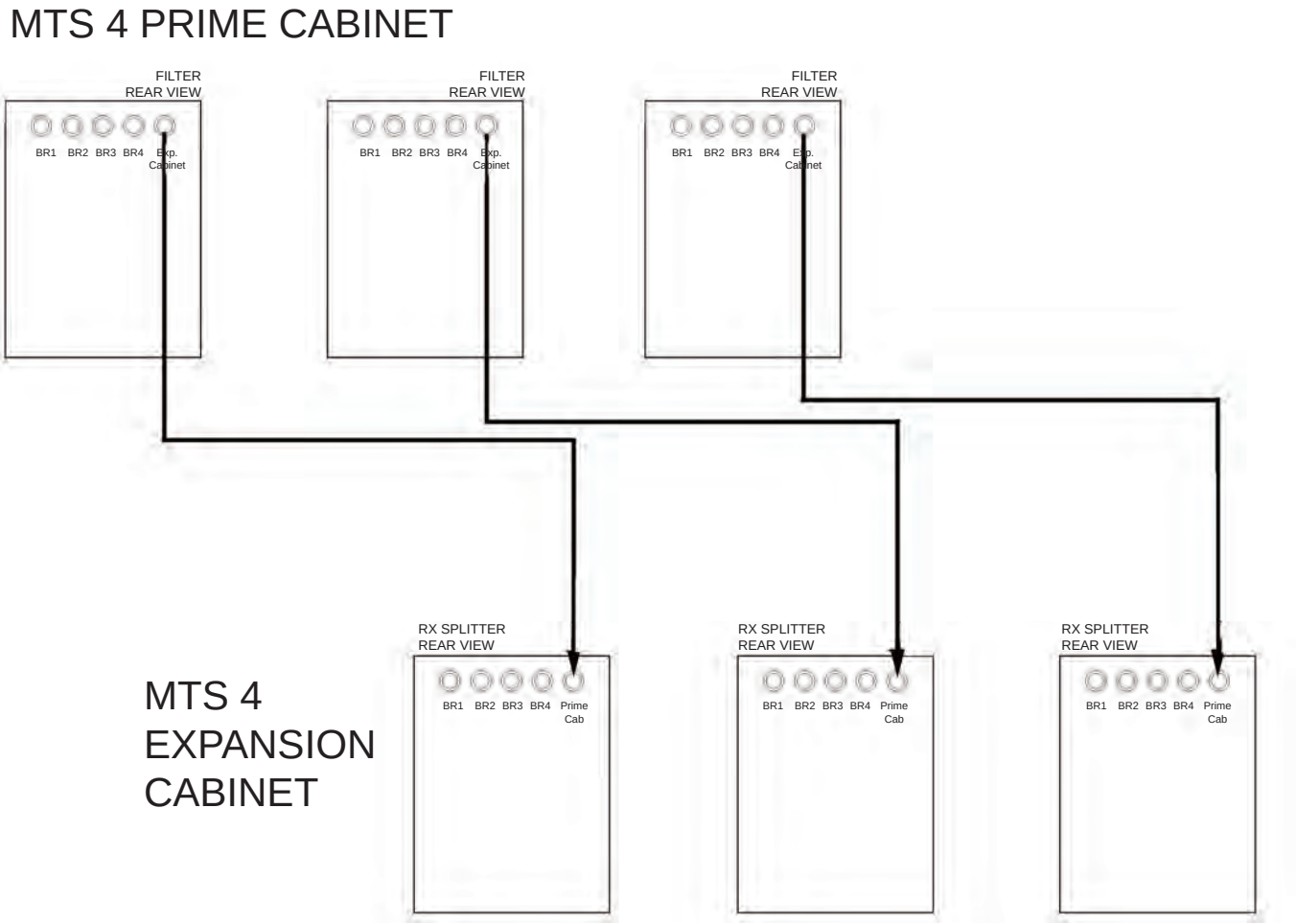

7.4.1
RX Splitter

The RX Splitter is a passive device functioning as an extension for the Receiver Multi Coupler function of the Duplexer/Preselector in MTS 4 to support eight Base Radios. It is connected to the Exp Cabinet connector on the Duplexer/Preselector present in the MTS 4 Prime Cabinet giving the right signal level for the RX-Splitter.

There are two types of RX splitters covering the 260 MHz range and the 350–825 MHz range.

The following figure displays the Expansion Cabinet RX Splitter.

Figure 163: Expansion Cabinet RX Splitter

Figure 164: Schematic Diagram of RX Splitter

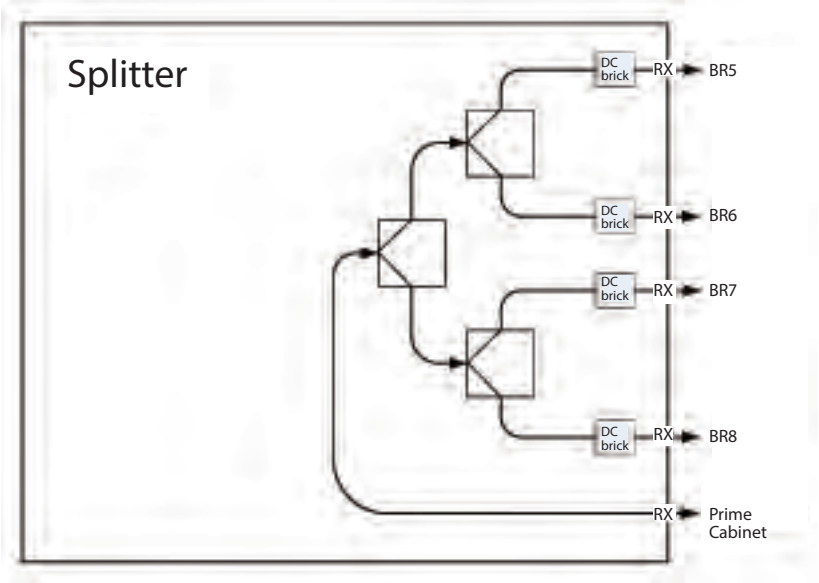

7.4.1.1

Replacing the Expansion Cabinet RX Splitter

This process outlines the recommended tasks to be performed to replace the Expansion Cabinet RX Splitter. For a list of available FRUs, see Field Replaceable Units (FRUs) on page 478.

Process:

1. Remove the RX splitter, see Removing the RX Splitter on page 315.
2. Reinstall the RX splitter, see Reinstalling the RX Splitter on page 316.

7.4.1.1.1

Removing the RX Splitter

This procedure describes how to remove the RX Splitter.

Procedure:

1. Remove the door of the cabinet completely.
2. Remove the four screws holding the front panel.
3. Loosen the two screws holding the front section of the top panel and slide off the panel.
4. Loosen the screws fastening the rear section of the top panel and slide off the panel.
5. Remove the RX cables connected to the back of the RX Splitter.
6. Loosen the two fastening screws at the front enough to free the mounting bracket.
7. Slide the RX Splitter out of the cabinet.
8. Remove the RX Splitter from the bracket and replace with the new unit.

7.4.1.1.2
Reinstalling the RX Splitter

This procedure describes how to reinstall the RX Splitter.

Procedure:

1. Fasten the RX Splitter onto the bracket.
2. Slide the RX Splitter into the cabinet.
3. Tighten the two fastening screws at the front.
4. Connect the RX cables to the back of the RX Splitter.
5. Slide on the top rear and front panels and fasten these with screws.
6. Place the front panel back on and screw this into place.
7. Put the door of the cabinet back on.

Chapter 8

Site Controller

The following figures show the front and the rear view of the site controller.

Figure 165: Site Controller Front View

Figure 166: Site Controller Rear View

8.1

Site Controller – Theory of Operation

The Site Controller controls resources within the MTS, including assignment of frequencies and slots to mobile stations. The Site Controller incorporates a Global Positioning System (GPS) module. The GPS module provides a high precision timing signal used as reference for the Base Radio receive and transmit functionality.

See Site Controller Specifications on page 437 for Site Controller hardware specifications.

Figure 167: Site Controller - Functional Block Diagram

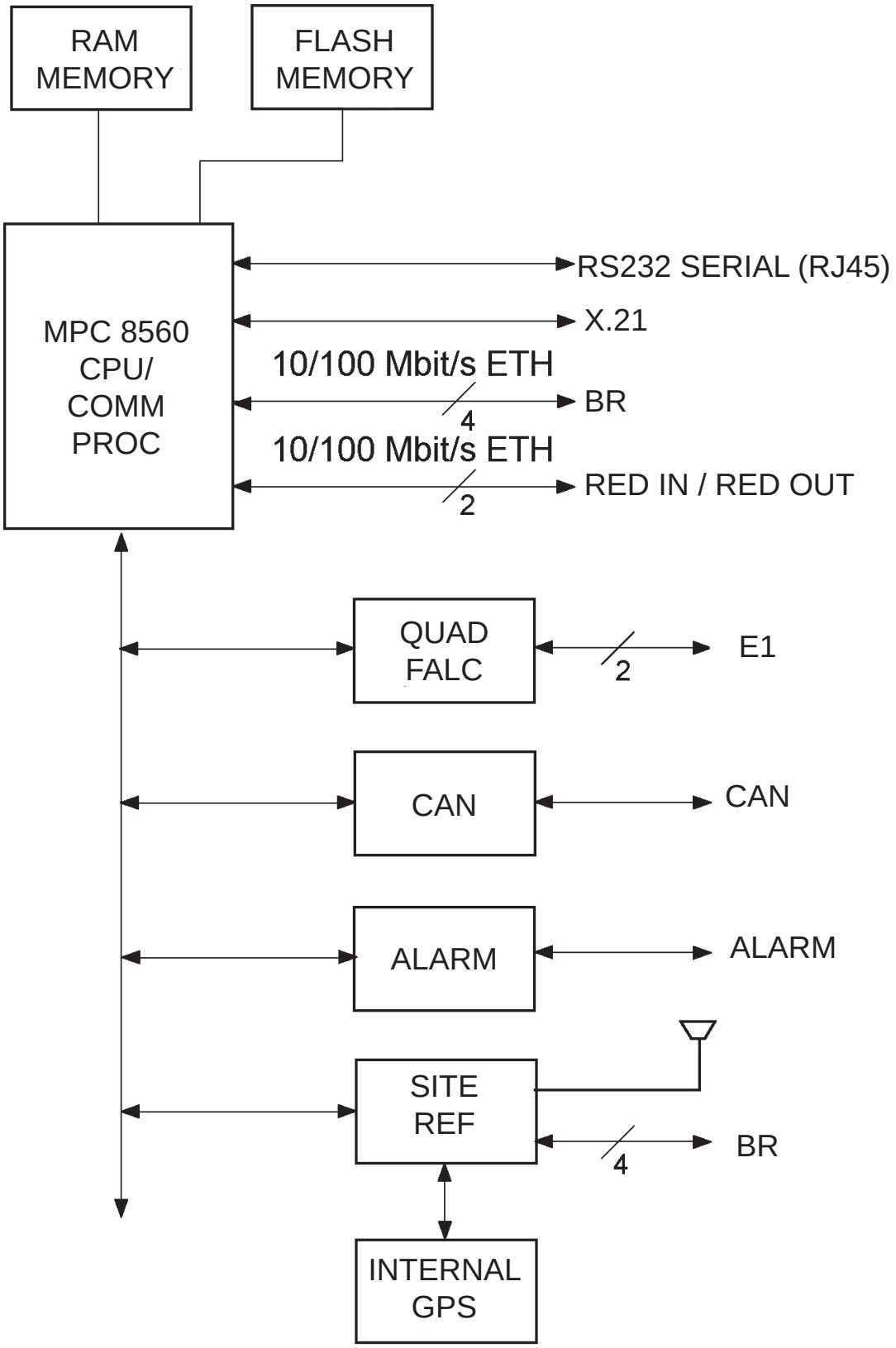

8.2

Site Controller – Indicators, Switches, and Connectors

This section contains information on indicators, switches, and connectors of the Site Controller.

8.2.1

Site Controller – Front Panel

BTSQ108SSR_MTS2and4_dr_SCCaptiveScrews_A

Figure 168: Site Controller - Front Panel

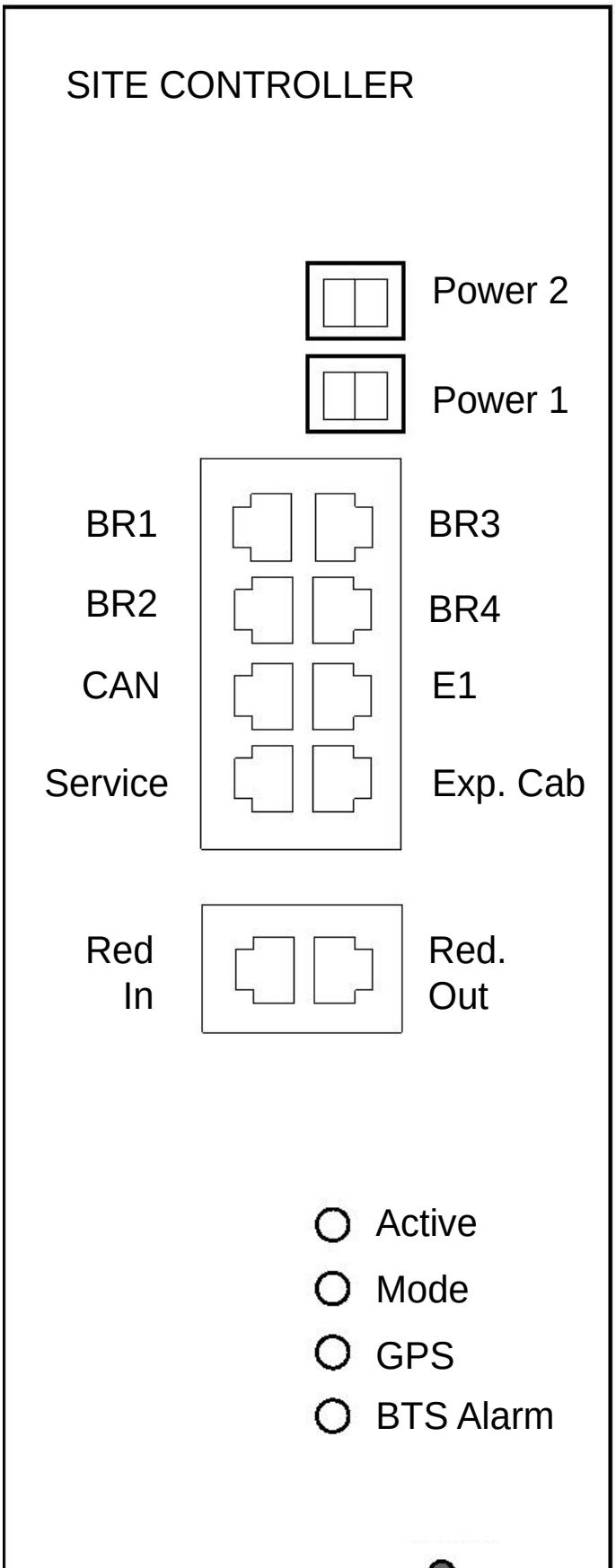

8.2.1.1

Site Controller – Front Panel Indicators (LED)

Figure 169: Site Controller - Front Panel LEDs Position

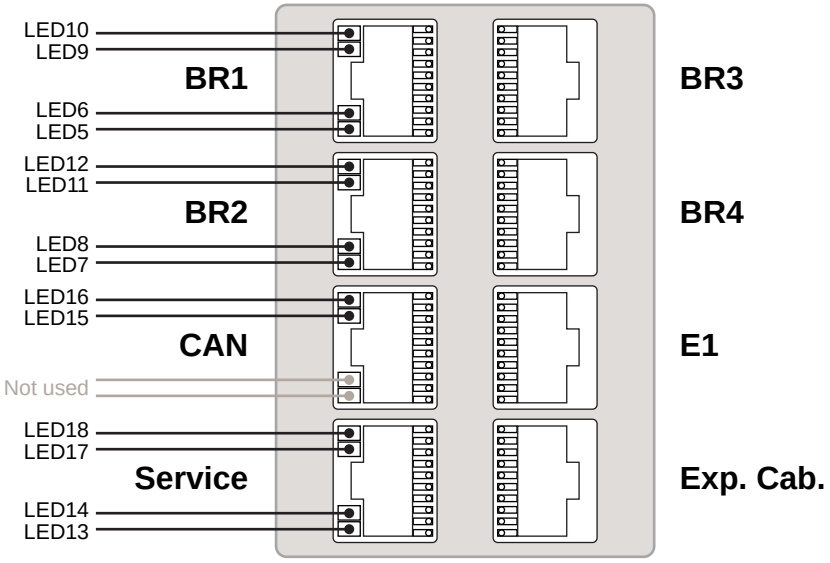

Table 85: Site Controller - Front Panel Indicators (LED)

LED	LED/Port Name	Position	Controlled by	Indication
LED1	Active	Front Panel	SW	Site Controller is active or standby: • OFF: Site Controller main application not running. • GREEN: E1/X.21 relay energized. • AMBER: E1/X.21 relay not energized. • RED: Failed Site Controller, replace FRU.
LED2	Mode	Front Panel	SW	Trunking status: • OFF: Boot up/No trunking/ Standby. • GREEN: Wide area trunking. • AMBER: Local site trunking.
LED3	GPS	Front Panel	SW	**Automatic Synchronized Configuration (ASC) Mode**: • OFF: Application is not running. • GREEN: BTS synchronized to GPS.

LED	LED/Port Name	Position	Controlled by	Indication
				• GREEN/AMBER Blinking: BTS synchronized to a standby SC. • AMBER Blinking: In training. • AMBER: GPS Free run mode synchronized (ETSI spec). • RED: NTP, NTP malfunction. • RED Blinking: Calibration is required. • GREEN/RED Blinking: Frequency lock is required, pull in. **Forced Non-Synchronized Configuration (FNC) Mode**: • OFF: Application is not running, free run or NTP. • GREEN: BTS synchronized to GPS. • GREEN/AMBER Blinking: BTS synchronized to a standby SC. • AMBER Blinking: In training. • RED Blinking: Calibration is required. • GREEN/RED Blinking: Frequency lock is required, pull in.
LED4	BTS Alarm	Front Panel	SW	• OFF: No alarms. • GREEN: Not used. • AMBER: CAN Bus problems. • RED: External alarms (major Alarm), Major/critical alarm, for details see Table 104: Site Controller LED Fault Indications on page 373.
			SW	3 LEDs blinking together: R (red) RRR->Y (yellow) YYY->G (green) GGG – LED test just after BTS reset or power up
			SW	RRRR blinking – replace the FRU
			SW	RRR blinking – replace the FRU
			SW	R->RR->RRR->RRRR->R->RR->RRR->RRRR-> ... – initializing file system (do not turn off and wait a few minutes, then application and configuration will have to be downloaded after initialization).

LED	LED/Port Name	Position	Controlled by	Indication
LED5	BR1	Port 1 LED1	HW, Enet switch	• OFF: Ethernet link not present. • GREEN: Ethernet link present.
LED6		Port 1 LED2	HW, Enet switch	• OFF: Ethernet activity not present. • YELLOW: Ethernet activity present.
LED7	BR2	Port 2 LED1	HW, Enet switch	• OFF: Ethernet link not present. • GREEN: Ethernet link present.
LED8		Port 2 LED2	HW, Enet switch	• OFF: Ethernet activity not present. • YELLOW: Ethernet activity present.
LED9	BR3	Port 3 LED1	HW, Enet switch	• OFF: Ethernet link not present. • GREEN: Ethernet link present.
LED10		Port 3 LED2	HW, Enet switch	• OFF: Ethernet activity not present. • YELLOW: Ethernet activity present.
LED11	BR4	Port 4 LED1	HW, Enet switch	• OFF: Ethernet link not present. • GREEN: Ethernet link present.
LED12		Port 4 LED2	HW, Enet switch	• OFF: Ethernet activity not present. • YELLOW: Ethernet activity present.
LED13	Service	Port 5 LED1	HW, Enet switch	• OFF: Ethernet link not present. • GREEN: Ethernet link present.
LED14		Port 5 LED2	HW, Enet switch	• OFF: Ethernet activity not present. • YELLOW: Ethernet activity present.
	CAN	Port 6 LED1		Not used.
		Port 6 LED2		Not used.
LED15	E1	Port 7 LED1		• OFF: Primary E1 not configured.

LED	LED/Port Name	Position	Controlled by	Indication
				• GREEN: Primary E1 OK (no LOS (Loss Of Signal)). • AMBER: Errors FE, CRC, BPV, PD. • RED: Primary E1 failure LOS.
LED1 6		Port 7 LED2		• OFF: Secondary E1 not configured. • GREEN: Secondary E1 OK (no LOS (Loss Of Signal)). • AMBER: Errors FE, CRC, BPV, PD. • RED: Secondary E1 failure LOS.
LED1 7		Port 8 LED1		• OFF: Ethernet link not present. • GREEN: Ethernet link present.
LED1 8	Exp.Cab.	Port 8 LED2		• OFF: Ethernet activity not present. • YELLOW: Ethernet activity present.

8.2.1.2

Site Controller – Front Panel Switches

Table 86: Site Controller - Front Panel Switches

Switch Name	Switch Function
Reset	The front-panel switch can be used to either generate an interrupt to the processor or to initiate a Hard Reset. • Push and hold (1 second) to generate interrupt. • Push and hold (>3 seconds) for Hard Reset.

8.2.1.3

Site Controller – Front Panel Connectors

Table 87: Site Controller - Front Panel Connectors

Connector Name	Connector Type	To/From	Comment
POWER SUPPLY	MOLEX (2 Pin)	PSU	28.5 VDC
BR	RJ45	BR	Ethernet
CAN	RJ45	BR	CAN Bus connection

Connector Name	Connector Type	To/From	Comment
E1	RJ45	Junction Panel	Pin connections on the Site Controller are different from the ones on the Junction Panel connector.
Service	RJ45	Service Terminal	Provides service access. See Table 88: Site Controller - Service Cable Pinouts on page 326 for service cable pinout information. (Service Cable PN: 3066565B)
Exp.Cab.	RJ45	XHUB in MTS 4 Expansion Cabinet	Only in configurations with MTS 4 Expansion Cabinet
Red In / Red Out	RJ45	Redundant Site Controller	Ethernet
GPS Antenna (for Site Controller with internal GPS receiver)	QMA	Junction Panel	GPS antenna input. +5VDC bias for active antenna.

Table 88: Site Controller - Service Cable Pinouts

RJ45 PIN	D-SUB 9 FEMALE PIN	Description
1		
2		
3		
4	3	Rx
5	5	GND
6		
7	2	Tx
8	5	GND
9		

8.2.2
Site Controller Rear Panel

Figure 170: Site Controller Rear Panel

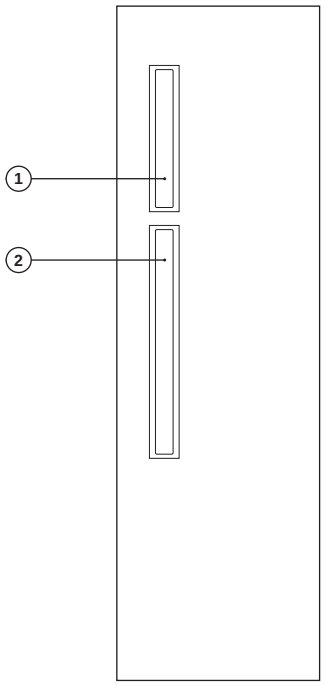

1 — X21/Remote GPS
2 — Alarms/Control

8.2.2.1
Site Controller – Rear Panel Connectors

Table 89: Site Controller - Rear Panel Connectors

Connector Name	Connector Type	To/From	Comment
Remote GPS/ X.21	IDE 26pin	Junction Panel	Connects to remote GPS/ X.21
Alarms/Control	IDE 34pin	Junction Panel	Provides Alarm/Control interface

8.3
Site Controller CAN Bus

The CAN Bus provides a common communication bus between RFDS equipment, Power Supply Unit (PSU) and the Site Controller. The CAN Bus connects to the Site Controller, PSU, DPM, and ATCC. The modules on the CAN Bus are assigned an address for the CAN Bus. When there are more than one modules of the same type, assigned a functionality in MTS to each node. Mapping between the track number, CAN ID, and function relies on the fact that the unique track number is available from each unit.

At initialization of the MTS, the factory configures the Site Controller with a relation between track number and the function of the node. You can modify this configuration in a service situation.

If a node is removed or is defective, the Site Controller knows the track number of a non-responding FRU and therefore it can make a proper service report which tells exactly what FRU to replace. When the service is carried out, replace the track number of the defective FRU with the new track number in the mapping list, that way the new track number is mapped to the function of the replaced FRU.

Figure 171: Site Controller - CAN Bus

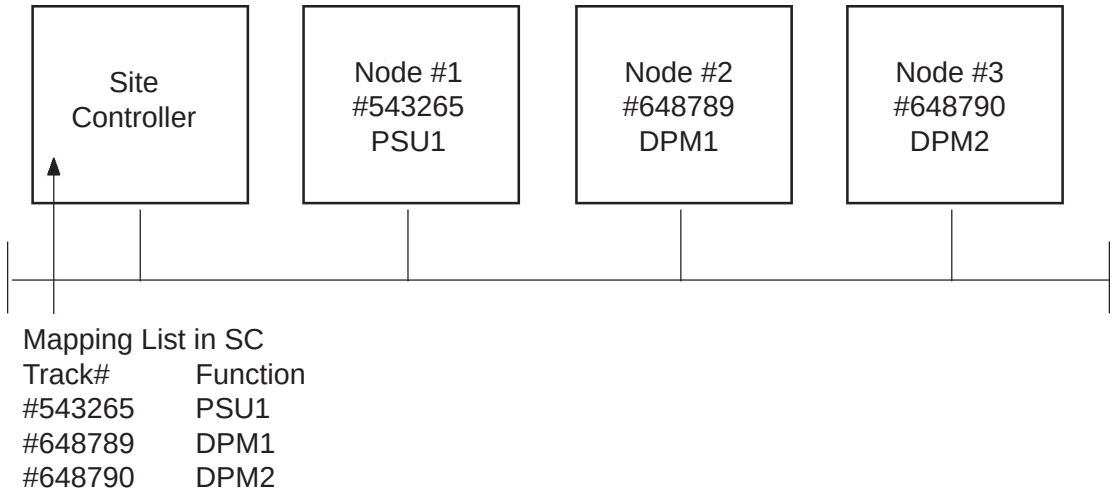

Table 90: Site Controller - CAN Bus Functionality

Unit	Function
PSU	Monitoring: • PSU temperature: -30 °C to +100 °C, tolerance: 2 °C. • Battery current: -20 A to +10 A, tolerance: ±1%. • Battery voltage: 30 V to 60 V, tolerance: ±1%. • Battery temperature: -30 °C to +100 °C, tolerance: 2 °C. • 7 V output voltage: 0 V to 10 V, tolerance: ±2%. • 7 V output current: 0 A to 10 A, tolerance: ±2%. • 28.5 V output voltage: 0 V to 30 V, tolerance: ±2%. • 28.5 V output current: 0 A to 10 A, tolerance: ±2%. • PSU output power: 0 W to 1100 W, tolerance: ±2%. • Fan output voltage: 0 V to 30 V, tolerance: ±2%. • PSU input air temp.: -30 °C to +100 °C, tolerance: ±2 °C.
	Alarms: • DC Source Fail: Indicating DC input voltage outside limits (below 43 V). • DC Out Fail: DC output voltages out of limits. • AC Source Fail: Early warning, indicating that the AC input is interrupted and the PSU starts to operate from DC input source in 15 ms. (if a backup source is present).

Unit	Function
	• Software Fail: Indicating software is corrupted or unable to initialize. • Over Temperature: Indicating over temperature detected 5 °C to 10 °C before shutdown. • Fan 1 alarm: Fan 1 not operating (fan has stopped or its running speed is below specification), PSU has received a high signal (open collector) from fan tray 1 through fan connector 1. • Fan 2 alarm: Fan 2 not operating (fan has stopped or its running speed is below specification), PSU has received a high signal (open collector) from fan tray 2 through fan connector 2. • Fan 3 alarm: Fan 3 not operating (fan has stopped or its running speed is below specification), PSU has received a high signal (open collector) from fan tray 3 through fan connector 3.
	Controls: • FORCE DC: Controls the PSU to force the usage of the DC input if usable, disregard presence of AC. If DC is outside the usable range for the PSU, the PSU shall indicate an alarm using the DC-fail output. If DC input voltage comes below 43 V ±2% and if AC is usable the PSU shall take the input power from AC, disregarding a Force-DC control input. **NOTICE:** Force DC operation on a bad DC supply PSU or Battery: Bad DC supply is defined as a DC source where the voltage drops below 43 V for a few milliseconds when the PSU is forced to operate on DC. In case of a force DC command and bad DC supply the 28.5 V output voltage is allowed to drop down to 27 V for a maximum of 5 second, while the PSU automatically switches back to AC mode and the 28.5 V rises from 27 V to 28.5 V. During this sequence the DC out alarm is suppressed. • Fan supply output voltage is also controlled by the CAN Bus in 5 steps from 24 V to 12 V. The highest value is set by CAN Bus or automatically. • DC operation only: Prevents AC fail alarms (and associated LED) from the PSU on CAN Bus when the PSU is supplied from DC only. If the AC supply becomes present during DC operation, the AC Source Fail alarm circuit is automatically be reactivated. • AC operation only: Prevents DC fail alarms (and associated LED) from the PSU on CAN Bus when the PSU is supplied from AC only. If the DC supply becomes present during AC operation, the DC-Fail alarm circuit is automatically reactivated. • No Fan 1: Prevents Fan 1 alarm (and associated LED) when no fan 1 is connected. If the Fan1 becomes present during operation, the Fan1 alarm circuit is automatically reactivated. • No Fan 2: Prevents Fan 2 alarm (and associated LED) when no fan 2 is connected. If the Fan2 becomes present during operation, the Fan2 alarm circuit is automatically reactivated. • No Fan 3: Prevents Fan 3 alarm (and associated LED) when no fan 3 is connected. If the Fan3 becomes present during operation, the Fan3 alarm circuit is automatically reactivated.

Unit	Function
	NOTICE: See the *MMI Commands* manual for additional information on commands and parameters.
ATCC	Monitoring: • Cavity status. • ATCC Heartbeat signal: heart beat signal is repeated every 30 s. Alarms: • Software corrupted. • Distance between two channels below 150 kHz. • Cavity VSWR alarm. • Master Slave communication error. • Motor alarm. • Cavity tuning error alarms together. • VSWR exceeded the specified value. • Unable to park cavity. • Cavity unable to tune to the current frequency in 3 attempts. Controls: • Cavity tune timeout: establishes a timeout period between a fine-tuning of the cavities. All cavities must be fine-tuned at the timeout. • Park a cavity: instructs the ATCC to park the specified cavity. This involves adjusting the cavity resonance to a frequency outside of the Tx band. If RF power is present, the cavity parks and then re-tunes to the input frequency. • VSWR Alarm Threshold: establishes a threshold for enabling a VSWR Alarm. Valid threshold values are in the range 1.00 to 10.00 where 1.00 means **No VSWR**. Recommended values for each MTS configuration are: - **400 MHz:** 3.00 - **260 MHz:** 3.00 - **800 MHz:** 4.00
DPM (Duplexer, Post Filter)	Monitoring: • Forward power on a digital power monitor: the input power range is from 0 W to 150 W. • Reverse power on a digital power monitor: the input power range is from 0 W to 40 W. • VSWR from a DPM. • DPM temperature. • DPM Heartbeat signal. Alarms: • SW is corrupted or unable to initialize.

Unit	Function
	• VSWR alarm. Controls: • VSWR Alarm Threshold: establishes a threshold for enabling a VSWR Alarm. Valid threshold values are in the range 1.00 to 10.00 where 1.00 means **No VSWR**. Recommended values for each MTS configuration are: - **400 MHz:** 3.00 - **260 MHz:** 3.00 - **800 MHz:** 4.00

8.3.1

Updating CAN Bus TrackID Mapping List

When and where to use:
Perform this procedure to update the Mapping List with the New Unit TrackID.

Procedure:

1. Log on to the Site Controller.
2. To view the mapping list, type `can check_mapping`.

   See example below:

   ```
   SC> can check_mapping
   Units are present:
   Device Track ID
   DPM 1 JTH0500101
   PSU 1 JTH0500200
   Units are not present:
   DPM 2 JTH0500105
   Track ID not mapped:
   JTH0500102
   ```

3. On the list, locate the unit that you have removed and that is indicated as `Units are not present`.
4. Delete old CAN Bus unit from the CAN Bus unit mapping list. Type `can remove_mapping <Device>`, where <Device> is the old unit name. See example below:

   ```
   SC> can remove_mapping dpm 2
   ```

5. Add new CAN Bus unit to the CAN Bus unit mapping list.

   NOTICE: The new unit Track ID is present on the replaced unit label and indicated as `Track ID not mapped` in the list shown in step 2.

   Use `can add_mapping <Device> <TrackID>`, where< TrackID> is a TrackID of the new unit and <Device> is the new unit name. Units have the following names: psu X, dpm X, atcc X, where X denotes a digit between 0 and 3. See example below:

   ```
   SC> can add_mapping dpm 2 JTH0500102
   ```

6. View the updated mapping list using the `can check_mapping` command and check that there are no units labeled as `Track ID not mapped` or `Units are not present`.

8.4
Site Controller – GPS Module

The GPS module generates a highly accurate timing reference signal within the Base Station. The integrated GPS module tracks both GPS and Glonass satellites. At least 1 GPS satellite needs to be traced to provide time reference for the SC. Remote GPS module currently supports GPS and Beidou GNSS. GLONASS on the remote GPS module will be supported in the future. A proper GPS signal must be provided to the QMA input connector on the Site Controller. The Site Controller provides a +5 V DC supply voltage on the QMA connector. It provides a voltage supply for active antennas.

NOTICE:
See Hardware Installation on page 89 for description of external GPS.

See respective restoration manual (DIPS/DIPC/X Core systems) or *Service Manual* (DIPM system) for procedures on how to verify the internal and external GPS module.

8.5
Site Controller – Lithium Battery

This section contains procedures on how to check if the lithium battery needs changing and how to correctly replace it.

8.5.1
Resetting the RTC Battery Status

This procedure describes how to reset the status of the RTC battery. Perform this procedure after each RTC battery replacement.

Procedure:

1. In TETRA Application, enter: `hw rtc reset batteryStatus`

   The following message appears:

   ```
   reset RealTimeClock battery status
     - Status: OK
   ```

2. Set the date and time on the device manually by performing the following actions:
   - **a** Ensure that the GPS cable is disconnected.
   - **b** Log on to the device with a factory account and enter the current date and time in the following format: `SC# .date` ***<dd/mm/yyyy> <hh:mm:ss>***

     Step example: `SC# .date 02/03/2020 12:23:15`
   - **c** Restart MTS.
   - **d** Connect the GPS cable and wait until the device is synchronized.

8.5.2
Checking if the Site Controller Lithium Battery Needs Changing

Procedure:

1. Perform Resetting the RTC Battery Status on page 332.
2. Power down and then Power up the MTS.
3. Use the Site Controller Test Application to check the RTC alarm by typing `alarms -ofault_hndlr` and press **Enter**.
4.

- If the battery is OK there should be no RTC related alarms reported. There is no need to change the Site Controller Lithium Battery.
- If the battery still reports RTC related alarms, the battery is not working properly or not working at all. Proceed to Replacing the Site Controller Lithium Battery on page 333.

8.5.3
Replacing the Site Controller Lithium Battery

CAUTION: Danger of explosion if battery is replaced incorrectly. Replace battery only with the same or equivalent type recommended by manufacturer. Dispose of used batteries according to the manufacturers instructions.

Procedure:

1. Examine the contents of the flash filling system using the monitor command `SC> attrib`. Record the file attributes for each of the files.
2. **WARNING:** Shock Hazard. The MTS contains dangerous voltages which can cause electrical shock or damage to equipment. Turn off the MTS and remove the power cabling before servicing this equipment. Make sure that all power is off to prevent accidental contact with high energy and injury to personnel.

   Switch the MTS Power Supply Unit OFF.

   IMPORTANT: If two PSUs are present, switch off the supplying the Site Controller being replaced. Do not power down the MTS. In configuration with non-redundant power connection, the MTS Power Supply Unit can be switched off as an alternative to removing the cables.
3. Wear an ESD strap and connect its cable to a verified good ground. This strap must be worn to prevent ESD damage to any components.
4. Tag and disconnect any cabling from the Site Controller.
5. Loosen the two M4X10 captive screws securing the Site Controller to the chassis.

Figure 172: Site Controller - Captive Screws

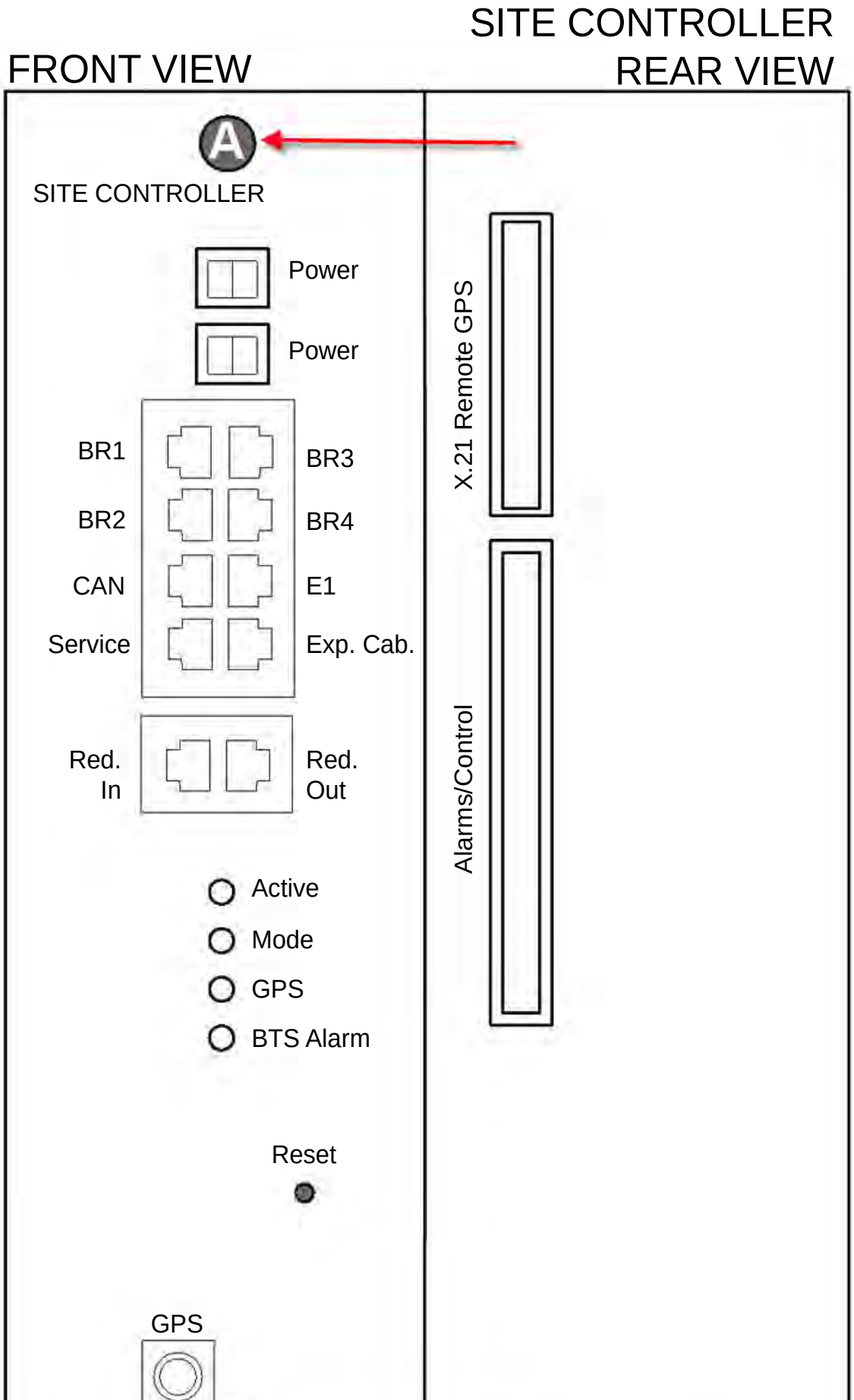

6 Use the handle, and gently slide the Site Controller from the slot, removing it from the chassis.

IMPORTANT: There are cables connected at the rear of the Site Controller. Slide out the Site Controller carefully, tag and disconnect ribbon cables at the rear.

7 Remove the Site Controller cover. Unscrew 19 screws securing the cover and slide it off gently to avoid damage to components installed on the board (the cover can harm the springs on the RJ45 connectors (front side connectors), when the cover has been slid nearly completely off).

8 Remove the old battery from the socket on the board.

Figure 173: Site Controller - Lithium Battery Location

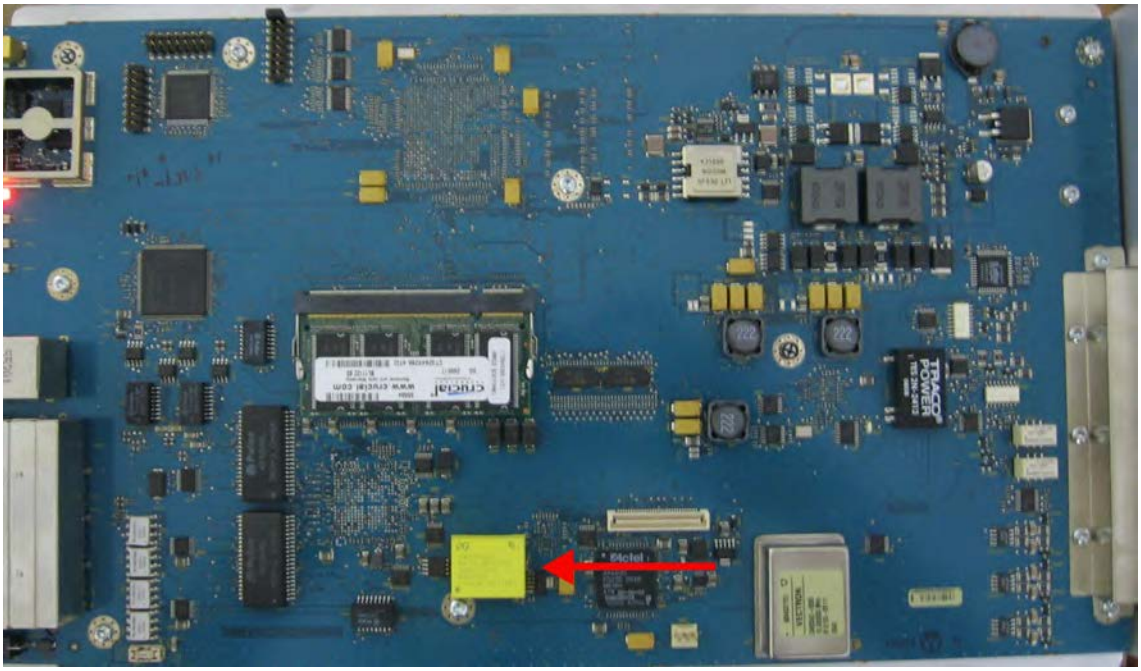

9 Install a replacement battery (Motorola p/n 5185151Y02) in its socket on the board.

IMPORTANT: Dispose or recycle the used battery according to local regulations.

10 Slide the cover gently on and secure it with 19 screws.

11 Install the Site Controller into the MTS. Use the handle to slide the unit into the chassis.

IMPORTANT: Connect the ribbon cables at the rear before sliding the unit into the chassis.

12 Secure the Site Controller in the chassis with the captive screws.

13 Except the power cables, reconnect all other cabling to the unit as tagged during the removal.

14 Power up the Site Controller:

- **a** Reconnect the power cables to the MTS Power Supply Units.
- **b** Set the power switch to the ON position.

15 Perform Resetting the RTC Battery Status on page 332.

Chapter 9

XHUB Controller

NOTICE: The content of this chapter is only supported in DIMETRA IP system releases D6.0 and later.

This chapter covers the following topics:

- XHUB Controller – Theory of Operation on page 338
- XHUB Controller – Indicators, Switches, and Connectors on page 339

Figure 174: XHUB Controller

9.1

XHUB Controller – Theory of Operation

NOTICE: MTS 4 sites equipped with Site Controller Rev A or B may experience service interruption to Base Radio(s) located in the Expansion Cabinet. Prior to Expansion Cabinet installation, Site Controllers of Rev A or B must be sent to factory for FPGA upgrade or replacement. Please see Motorola Solutions Technical Notifications (MTNs) for more information.

The eXpansion HUB (XHUB Controller) is a non-intelligent switching and interface module which plugs into the Site Controller slot of MTS 4 Expansion Cabinet. With the usage of an Expansion Cabinet and an XHUB, a station can be increased by a number of four Base Radios. The XHUB receive the CP3 interface from the Site Controller in the Prime Cabinet, distribute the Enternet and timing as CP2 links to the Base Radios in the Expansion Cabinet. The XHUB also have a door alarm input. The RFDS alarms is reported through the CAN bus or the receivers. The XHUB has following modes of operation:

- **Normal mode:** XHUB Controller in the MTS 4 Expansion Cabinet has an active connection with a Site Controller in the MTS 4 Prime Cabinet. The XHUB may be used to extend the switching and interface capabilities of the Site Controller.
- **Impaired Normal mode:** If connection to the Site Controller of the MTS 4 Prime Cabinet is lost, the XHUB Controller will go into Impaired Normal mode. It will return to Normal mode as soon as the connection to the Site Controller is restored.
- **Standalone mode:** If no connection to the Site Controller is present when the XHUB is turned ON or being Reset, it will go into Standalone mode. In order to go to Normal mode, the XHUB Controller needs to be Reset again.

NOTICE: The Site Controller door alarm configuration is also valid for the XHUB.

Figure 175: XHUB Controller – Functional Block Diagram

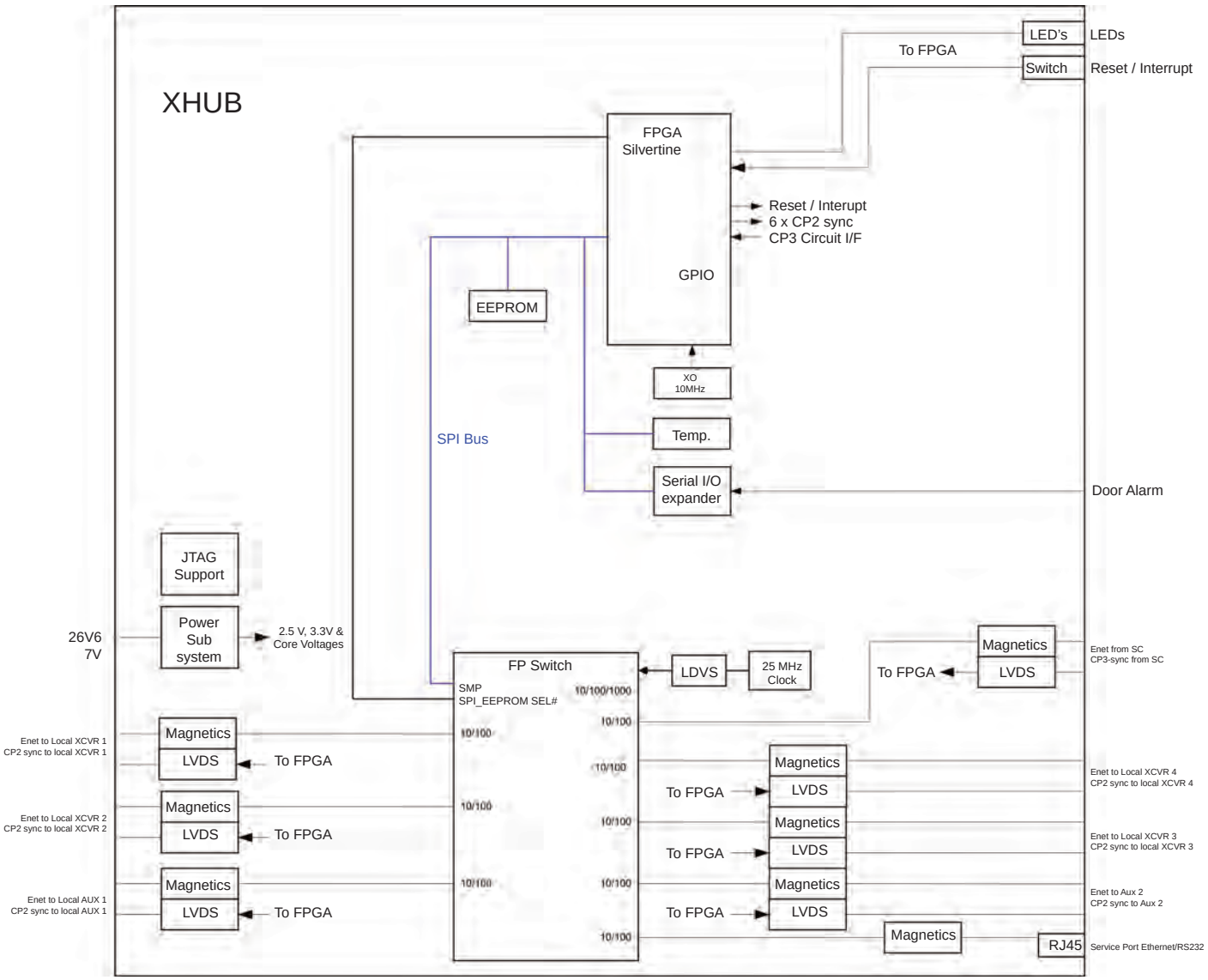

9.2
XHUB Controller – Indicators, Switches, and Connectors

This section contains information on indicators, switches, and connectors of the XHUB Controller.

9.2.1

XHUB Controller – Front Panel

Figure 176: XHUB Controller- Front Panel

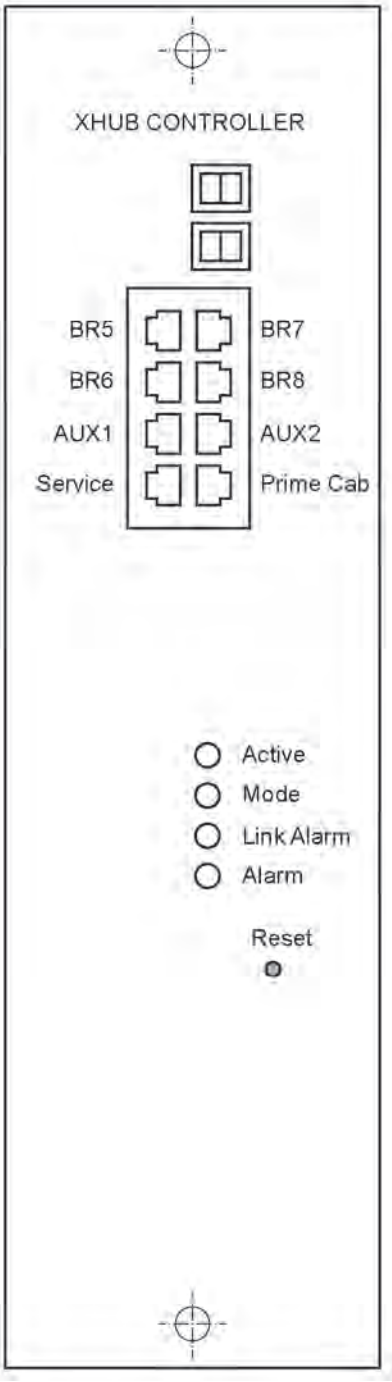

This section contains following topics:

- XHUB Controller – Front Panel Indicators (LED) on page 341
- XHUB Controller – Front Panel Switches on page 342
- XHUB Controller – Front Panel Connectors on page 342

9.2.1.1

XHUB Controller – Front Panel Indicators (LED)

The following table lists the Front Panel LEDs.

Table 91: XHUB Controller – Front Panel Indicators (LED)

LED	LED/Port Name	Position	Controlled By	Indication
LED1	Active	Front Panel	SW	GREEN: XHUB is Active and in Normal mode OFF: XHUB in Standby or Standalone/Impaired Normal mode
LED2	Mode	Front Panel	HW	GREEN: Normal or Impaired Normal Mode OFF: Standalone mode
LED3	Link Alarm	Front Panel	HW	RED: Impaired Normal or Standalone mode OFF: Normal mode
LED4	Alarm	Front Panel	SW	RED: If Alarms (Problem or Failure) in Normal mode or Unknown XHUB state FLASH: Impaired Normal mode
LED5	BR5	Port 1 LED1	HW, Enet switch	OFF: Ethernet link not present GREEN: Ethernet link present
LED6		Port 1 LED2	HW, Enet switch	OFF: Ethernet activity not present YELLOW: Ethernet activity present
LED7	BR6	Port 2 LED1	HW, Enet switch	OFF: Ethernet link not present GREEN: Ethernet link present
LED8		Port 2 LED2	HW, Enet switch	OFF: Ethernet activity not present YELLOW: Ethernet activity present
LED9	BR7	Port 3 LED1	HW, Enet switch	OFF: Ethernet link not present GREEN: Ethernet link present
LED10		Port 3 LED2	HW, Enet switch	OFF: Ethernet activity not present YELLOW: Ethernet activity present
LED11	BR8	Port 4 LED1	HW, Enet switch	OFF: Ethernet link not present GREEN: Ethernet link present
LED12		Port 4 LED2	HW, Enet switch	OFF: Ethernet activity not present YELLOW: Ethernet activity present
LED13	Service	Port 5 LED1	HW, Enet switch	OFF: Ethernet link not present GREEN: Ethernet link present

LED	LED/Port Name	Position	Controlled By	Indication
LED14		Port 5 LED2	HW, Enet switch	OFF: Ethernet activity not present YELLOW: Ethernet activity present
LED15	AUX1	Port 6 LED1	HW, Enet switch	OFF: Ethernet link not present GREEN: Ethernet link present
LED16		Port 6 LED2	HW, Enet switch	OFF: Ethernet link not present YELLOW: Ethernet link present
LED17	AUX2	Port 7 LED1	HW, Enet switch	OFF: Ethernet link not present GREEN: Ethernet link present
LED18		Port 7 LED2	HW, Enet switch	OFF: Ethernet link not present YELLOW: Ethernet link present
LED19	Prime Cab	Port 8 LED1		OFF: Ethernet link not present GREEN: Ethernet link present
		Port 8 LED2		OFF: Ethernet activity not present YELLOW: Ethernet activity present

9.2.1.2

XHUB Controller – Front Panel Switches

The following table lists the Front Panel switches of the XHUB Controller and their functions.

Table 92: XHUB Controller – Front Panel Switches

Switch Name	Switch Function
Reset	The front-panel switch can be used to initiate a Hard Reset of the XHUB Controller. Push and hold (>3 seconds) for Hard Reset.

9.2.1.3

XHUB Controller – Front Panel Connectors

The following table lists the front panel connectors of the XHUB controller.

Table 93: XHUB Controller – Front Panel Connectors

Connector Name	Connector Type	To/From	Comment
Power	MOLEX (2 Pin)	PSU	28.5 V DC
BR	RJ45	BR	Ethernet
AUX1	RJ45	BR or Ethernet Sitelink	Used in E-Tetra configurations or Ethernet Sitelink
AUX2	RJ45	BR	Used in E-Tetra configurations
Service	RJ45	Service Terminal	Provides service access

Connector Name	Connector Type	To/From	Comment
Prime Cab	RJ45	SC (in Prime Cab)	

9.2.2
XHUB Controller – Rear Panel

This section provides information about Rear Panel connectors of the XHUB Controller.

9.2.2.1
XHUB Controller – Rear Panel Connectors

The following table lists the rear panel connectors of the XHUB controller.

Table 94: XHUB Controller – Rear Panel Connectors

Connector Name	Connector Type	To/From	Comment
Alarms/Control	IDE 34-pin	Cabinet door sensor	Provide Alarm

9.3
Replacing the XHUB Controller

WARNING: See Static Precautions and ESD Strap on page 492 before proceeding with replacement process.

Procedure:

1. Disconnect the power cables to the MTS Power Supply Units.

   WARNING: Shock Hazard. The MTS contains dangerous voltages which can cause electrical shock or damage to equipment. Turn off the MTS and remove the power cabling before servicing this equipment. Make sure that all power is off to prevent accidental contact with high energy and injury to personnel.

2. Wear an ESD strap and connect its cable to a verified good ground. This strap must be worn to prevent ESD damage to any components.
3. Tag and disconnect all other cabling from the XHUB Controller.
4. Loosen the two M4X10 captive screws securing the XHUB Controller to the chassis.
5. Use handle, and gently slide the XHUB Controller from the slot, removing it from the chassis.

   IMPORTANT: There are cables connected at rear of the XHUB. Slide out the XHUB carefully, tag and disconnect ribbon cables at the rear.

6. Install the replacement XHUB Controller. Use handle to slide the unit into the chassis.

   IMPORTANT: Connect the ribbon cables at the rear before sliding the unit into the chassis.

7. Secure the XHUB Controller in the chassis with the captive screws.
8. Reconnect all other cabling to the unit as tagged during the removal except the power cables.
9. Reconnect the power cables to the MTS Power Supply Units.

9.3.1
XHUB Controller – FRU

Table 95: XHUB Controller - FRU

Kit Number	Description
GMLN4689A	XHUB MTS-EXP Controller

See Planned Maintenance Inspection (PMI) on page 491 for list of Periodic Maintenance Inspections.

Chapter 10

Base Radio

This chapter covers the following topics:

- Base Radio – Overview on page 345
- Base Radio – Theory of Operation on page 346
- Base Radio – Indicators and Connectors on page 352
- Replacing the Base Radio on page 354

10.1

Base Radio – Overview

Figure 177: Base Radio

The Base Radio provides reliable digital radio capabilities in a compact software-controlled design. High channel capacity is provided through voice compression techniques and Time Division Multiplexing (TDM).

On the Base Radio front panel there are connectors and indicators. The indicators provide a means for monitoring various status and operating conditions of the Base Radio, and also aid in isolating failures.

For more information on Base Radio indicators and connectors, see Base Radio – Indicators and Connectors on page 352 in this chapter.

10.2 Base Radio – Theory of Operation

The Base Radio (BR) provides reliable digital communications capabilities. Each Base Radio contains the following subcomponents:

- Transceiver consisting of a Base Radio Controller, a triple receiver, and an exciter
- Power Amplifier (PA)

In the MTS 2 and 4, the Base Radio (BR) operates in conjunction with the Site Controller (SC) through a properly terminated 100Base-T Ethernet link.

Figure 178: Base Radio Front Panel

On the front panel, there is a DC power input, three parallel receiver (RX) inputs, a high power transmitter output signal from the power amplifier, a service port, two interfaces to the Site Controllers, and LED indicators. For more information on the LED indicators, see Table 98: Base Radio – LED Indicators on page 352.

The following figures show overall block diagrams of the Base Radios for both architectures: BR-Arch-1 and BR-Arch-2.

Figure 179: BR-Arch-1 Base Radio – Functional Block Diagram

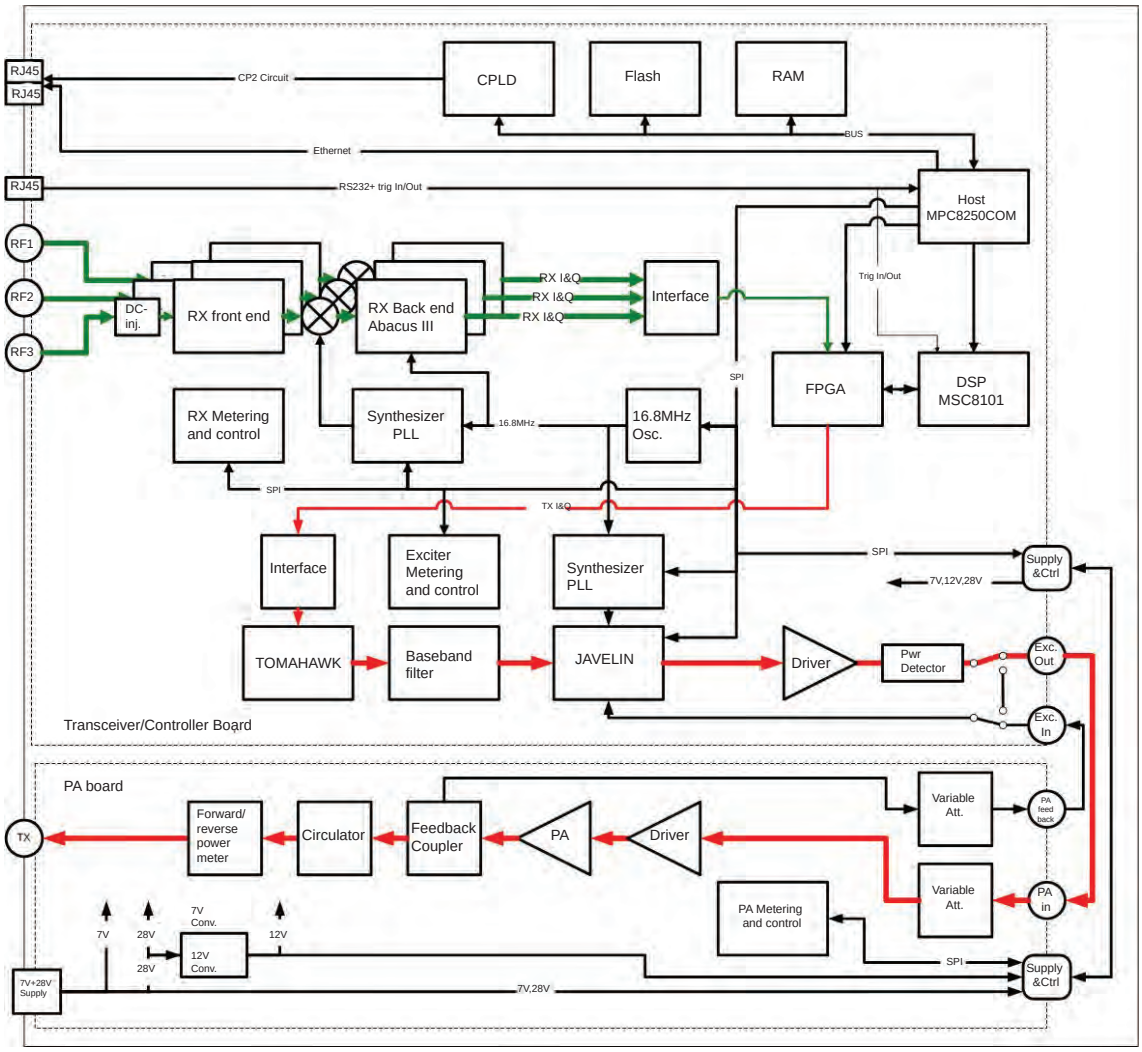

Figure 180: BR-Arch-2 Base Radio – Functional Block Diagram

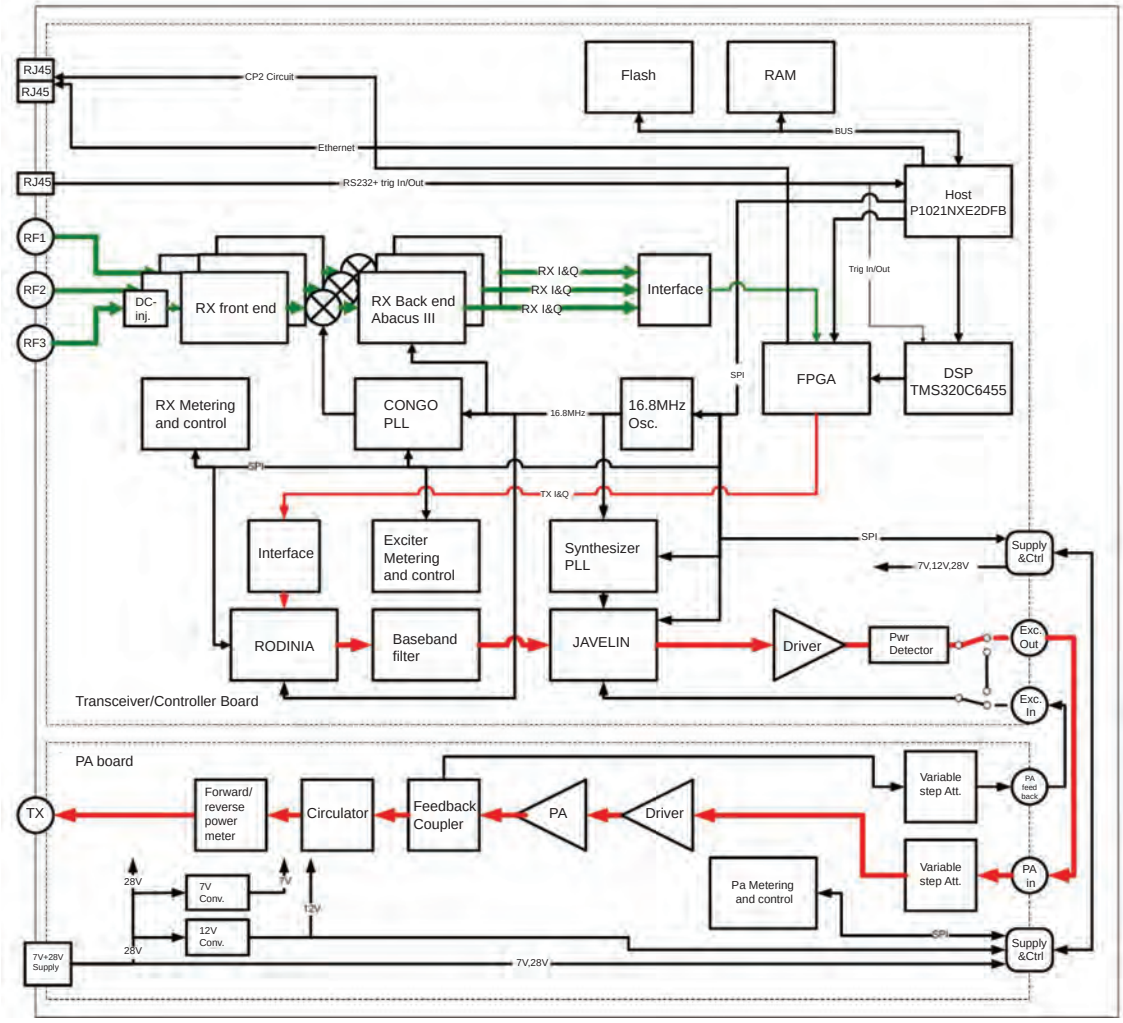

Upon the power-up, BRC bootloader begins to download application code from SC over the Ethernet LAN. After successful download, the code is executed. Once the BRC application is started, it gets configuration parameters from SC. The configured BRC application allows the Base Radio to perform call processing functions.

Should any alarm conditions arise during BRC application, operation, they are reported to SC over Ethernet LAN. Alarm conditions may also be verified locally through the Service Access port linked to a service computer using the `get alarms` MMI command.

The Base Radio operates in a TDMA (Time Division Multiple Access) mode. This mode, combined with voice compression techniques, provides an increased channel capacity ratio of as much as 4 to 1. Both the receive and transmit signals of the Base Radio are divided into four individual timeslots. Each receive slot has a corresponding transmit slot; this pair of slots comprises a logical RF channel.

The Base Radio uses single, dual, and triple diversity reception for increased talkback coverage area and improved quality. The Transceiver contains a three-branch receiver section in which all receivers are used for triple diversity reception.

All receivers within a given Base Radio are programmed to the same receive frequency. The signals from each receiver are fed to the BRC where a diversity combining algorithm is performed on the signals. The resultant signal is processed for error correction and then sent to the Site Controller through the Ethernet LAN with the appropriate control information regarding its destination.

The transmit section of the Base Radio is comprised of the Exciter (EXC) and Power Amplifier (PA). The EXC processes the information to transmit from the BRC in the proper modulation format. This low-level signal is sent to the Power Amplifier where it is amplified to the desired output power level. The PA is a continuous-keyed linear amplifier. A power control routine monitors the output power of the Base Radio and adjusts it as necessary to maintain the proper output level.

For information on the performance specifications, see Technical Specifications on page 428.

NOTICE: The Base Radio is prepared for TEDS.

10.2.1
Transceiver (XCVR)

The transceiver provides the receive, transmit, and control functions for the Base Radio. The transceiver consists of three elements:

- Receiver-performs the receive function
- Exciter-performs the transmit function
- BR Controller-performs the control function

The receiver incorporates three separate receiver channels for use in diversity reception. The bias for the LNAs in the Preselectors is supplied by bias circuitry in the receiver. A +7 V dc voltage is the output on the QMA receive input connectors.

The receiver performs highly selective bandpass filtering and dual down conversion of the station receive RF signal. A custom receiver IC outputs the baseband information in a digital data format and sends it to the Base Radio controller.

The exciter in conjunction with the Power Amplifier (PA), provides the modulation and transmitter functions for the Base Radio.

The transceiver contains the Base Radio Controller (BRC). The BRC serves as the main controller of the Base Radio. The BRC provides signal processing and operational control for the other Base Radio circuit blocks.

The operating software and configuration data are contained within the BRC flash memory. The software defines operating parameters for the BR, such as output power and operating frequency.

NOTICE: To protect the key encryption key in use in the infrastructure, it is recommended that this key is overwritten using the Key Variable Loader (KVL) device (through the front serial port) before shipping for repair.

IMPORTANT: BR-Arch-1 Base Radios: To avoid the risk of causing a high bit error rate to occur, do not use 385.572 MHz and 419.175 MHz as receiving frequencies in the Base Radios of the MTS.

10.2.2
Power Amplifier

The Power Amplifier (PA) in conjunction with the exciter provides the transmitter functions for the Base Radio. The Power Amplifier accepts the low-power modulated RF signal from the exciter and amplifies the signal for transmission through the RF output connector. Base Radios in BR-Arch-2 architecture use single, high-power amplifiers capable of running efficiently in low-power settings.

Power Amplifiers in BR-Arch-1 Base Radios

Power Amplifiers in BR-Arch-1 are available in both high and low power versions. High-power PAs in 400 MHz band are available on two different frequency bands. The following table contains a list of all available PAs in BR-Arch-1 Base Radios.

Table 96: Power Amplifiers in BR-Arch-1 Architecture

MTS Band	Power Configuration	Frequency Bands
260 MHz	low-power	260 MHz – 275 MHz
400 MHz	high-power	350 MHz – 379 MHz
		380 MHz – 470 MHz
	low-power	380 MHz – 470 MHz
800 MHz	low-power	806 MHz – 870 MHz
900 MHz	low-power	932 MHz – 942 MHz

Figure 181: Low-power PA Functional Block Diagram

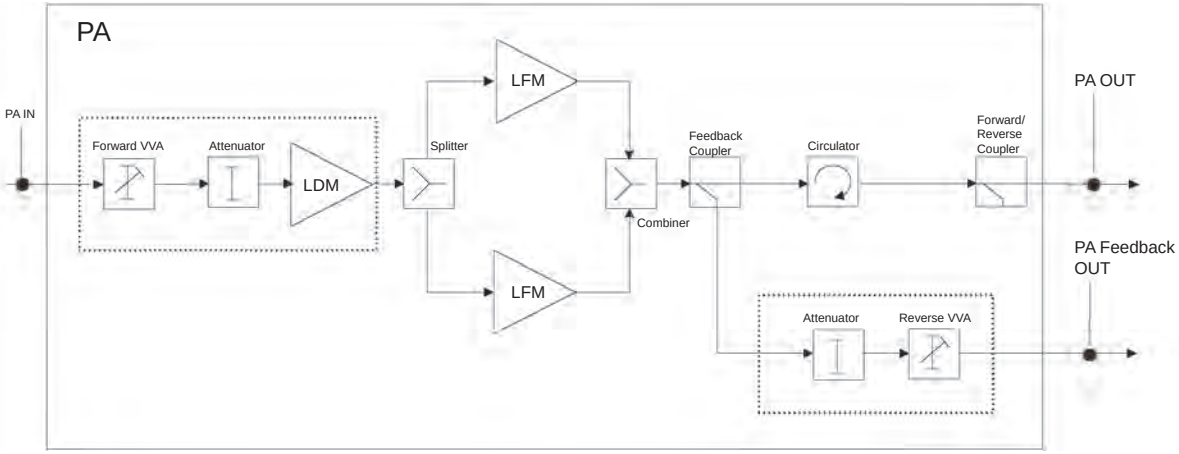

Figure 182: High-power PA Functional Block Diagram

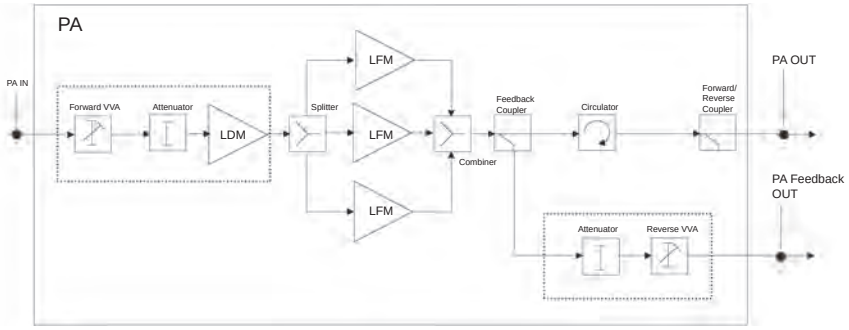

Power Amplifier in BR-Arch-2 Base Radios

Power Amplifiers in BR-Arch-2 are available in a single, high-power version capable of running efficiently in low-power setting. This version comes in different frequency bands. The following table contains a list of all available PAs in BR-Arch-2 Base Radios.

Table 97: Power Amplifiers in BR-Arch-2 Architecture

MTS Band	Power Configuration	Frequency Bands
400 MHz	high-low power	320 – 400 MHz
		380 – 470 MHz

Figure 183: Mid-power PA Functional Block Diagram

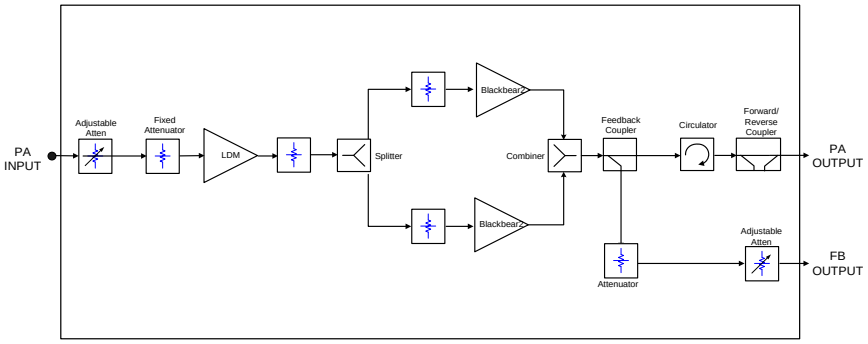

10.3

Base Radio – Indicators and Connectors

Table 98: Base Radio – LED Indicators

#	LED/Port name	Type	Controlled by	Indication
LED 1	Tx	Red/ Green	SW	BR keying: • OFF: BR is not keyed • AMBER: BR is keyed without service • GREEN: BR is keyed
LED 2	Aux	Red/ Green	SW	• OFF: No alarms • AMBER: not used • RED: not used
LED 3	Status	Red/ Green	SW Red LED will turn on before SW change any indication	BR status: • OFF: Status unknown, power off • GREEN: BRC main application is running

#	LED/Port name	Type	Controlled by	Indication
				• AMBER: Waiting for SWDL this is where the BR will wait if no Site Controller is present • RED: SW not started, power on
LED 4	BR Alarm	Red/ Green	SW	• OFF: No alarms • AMBER: BR minor alarm: PA, Exciter, RX, BRC Reduced performance • RED: BR failed: PA, Exciter, RX, BRC
LED5	SC 1	Green	HW, Enet IC	• OFF: Ethernet link not present • GREEN: Ethernet link present
LED6	SC 1	Yellow	HW, Enet IC	• OFF: Ethernet activity not present • YELLOW: Ethernet activity present
LED7	SC 2	Green	HW, Enet IC	• OFF: Ethernet link not present • GREEN: Ethernet link present
LED8	SC 2	Yellow	HW, Enet IC	• OFF: Ethernet activity not present • YELLOW: Ethernet activity present

Table 99: Base Radio – Connectors

Name of Connec-tor	Type	To/From	Comment
SC1	RJ45	Site Controller	Ethernet/CP2 interface
SC2	RJ45	Site Controller	Ethernet/CP2 interface
Service	RJ45	BRC	Provides service access. See Table 100: Base Radio – Service Cable Pinouts on page 354 for service cable pinout information.
RX1	QMA	Preselector/ Duplexer	RF RX signal and +7 V dcl
RX2	QMA	Preselector/ Duplexer	RF RX signal and +7 V dc

Name of Connec-tor	Type		To/From	Comment
RX3	QMA		Preselector/ Duplex-er	RF RX signal and +7 V dc
Tx	QMA		Hybrid Combiner/ Cavity Combiner	RF TX signal
Power	MOLEX		Power Supply Unit	
	Pin 1 - 3	GND		
	Pin 4	+7 V		
	Pin 6 - 7	+28.5 V		
	Pin 5, 8 - 14	not used		

Table 100: Base Radio – Service Cable Pinouts

RJ45 PIN	D-SUB 9 FEMALE PIN	Description
1		
2		
3		
4	3	Rx
5	5	GND
6		
7	2	Tx
8	5	GND
9		

10.4

Replacing the Base Radio

For a list of available Field Replaceable Units (FRUs), see Field Replaceable Units (FRUs) on page 478.

Process:

1. Remove the Base Radio module, see Removing the Base Radio on page 355.
2. Reinstall the new Base Radio, see Reinstalling the Base Radio on page 356.
3. Perform the procedures from the Configuring and Verifying the Base Radio on page 251 section.
4. If Encryption and/or Authentication is used, see *MTS LiTE, MTS 2, and MTS 4 Restoration* manual (for DIPS/DIPC/X Core systems) or *Service Manual* (DIPM system) for details on loading Ki's into MTS.

10.4.1
Electrostatic Discharge Precaution

The Base Radio circuitry contains many CMOS and other electrostatic discharge sensitive devices. Take precautionary measures to prevent damage of Base Radio modules by static discharge when servicing the equipment.

Observe the following additional precautions:

- Wear a wrist strap (Motorola Part No. 4280385A59 or equivalent) at all times when servicing the Base Radio to minimize static build up.
- A jack is provided at top left of module cage marked with the ground symbol.
- Keep spare modules in factory packaging for transporting. When shipping modules, always pack in original packaging.

For more information, see Static Precautions and ESD Strap on page 492.

10.4.2
Restoring the Base Radio

Process:

1. Remove the Base Radio.

   See Removing the Base Radio on page 355.
2. Reinstall the Base Radio.

   See Reinstalling the Base Radio on page 356.

10.4.2.1
Removing the Base Radio

Procedure:

1. Remove power from the MTS by switching off the Power Supply Unit.

   NOTICE: To perform a hotswap of a Base Radio, do not turn off the Power Supply. Connect a terminal to the Service Port and log in. Make sure the Base Radio is not transmitting by entering the MMI command:

   - From the Base Radio Core or Boot1 use: `dekey`
   - From the Test Application use: `power -otxch1 -a0.0`

   For more information on this command, see *MMI Commands Manual*.
2. Unplug the cables at front of the Base Radio.
3. Remove the TORX screws securing the faulty module to the chassis; these are located on the top and bottom of the front plate of the faulty module. Save the screws for reuse.
4. **CAUTION:** The module can be very hot. To avoid injury, allow the module to cool down before servicing.

   Pull out the module.

10.4.2.2
Reinstalling the Base Radio

Procedure:

1. Insert the replacement Base Radio by aligning the side rails with the appropriate rail guides inside the Base Radio chassis.
2. Gently push the replacement module completely into the Base Radio chassis assembly using the module handle(s).
3. Secure the replacement module using two TORX screws removed during module removal. Tighten the screws to a torque of 2.7 Nm.
4. Reconnect the cables to the BR front plate.
5. Switch on the Power Supply Unit.

   NOTICE: Do not perform this step when doing a hotswap.

Chapter 11

Power Supply Unit

The following figure shows the front of the Power Supply Unit (PSU).

Figure 184: Power Supply Unit Front Panel

11.1 Power Supply Unit (PSU) – Theory of Operation

Dependent on its configuration the MTS is equipped with one or two high efficiency switch mode Power Supply Units (PSU). The PSU has a nominal AC input of 100VAC/240VAC (45-66 Hz) as well as a DC input of 48VDC.

The PSU:

- has the capability to charge a 48V backup battery during AC operation mod.
- provides several DC output voltages to supply Base Radios, Site Controller, ATCC and Fans
- complies with the appropriate CE marking, EMC, EMI and safety requirements.

There is an ON/OFF switch on the front panel of the PSU module which connects/disconnects DC output voltages.

The PSU operates in the following modes:

- DC only operation at -48VDC (within -41VDC to -60VDC).

  NOTICE: DC operation mode does not allow any battery controlling.

- AC only operation at 100/240VAC (within 90 VAC to 264 VAC;) without battery charging.
- AC operation (within 90 VAC to 264 VAC;) and automatic switch over to DC backup battery operation when AC fails.

WARNING: Input Reverse Voltage Protection: The PSU is protected from damage due to a reverse polarity input connection. If the input polarity is reversed, the DC In Status LED will be solid red.

The MTS cabinet itself is wired to positive ground earth. The Power Supply Unit has a floating DC ground concept.

For more information on PSU technical specifications, see Power Supply Unit Specifications on page 441.

11.1.1
PSU CAN Bus Monitoring, Alarms, and Controls

The PSU is monitored and controlled by the Site Controller. All monitoring outputs, alarm outputs, PSU ID number and control inputs are available through a CAN Bus. It is also possible to update the PSU firmware through the CAN Bus while the PSU is operational.

A unique identification of up to 4 PSUs is achieved by means of software. The assigned ID is used to identify the PSU on the CAN Bus for commands and alarms. For more information on CAN Bus, see Site Controller on page 317.

PSU monitoring parameters that can be measured through the CAN Bus:

- PSU temperature: -30 °C to +100 °C, tolerance: ±2 °C.
- Battery current: -20 A to +10 A, tolerance: ±1%.
- Battery voltage: 30 V to 60 V, tolerance: ±1%.
- Battery temperature: -30 °C to +100 °C, tolerance: ±2 °C.
- 7 V output voltage: 0 V to 10 V, tolerance: ±2%.
- 7 V output current: 0 A to 10 A, tolerance: ±2%.
- 28.5 V output voltage: 0 V to 30 V, tolerance: ±2%.
- 28.5 V output current: 0 A to 10 A, tolerance: ±2%.
- PSU output power: 0 W to 1100 W, tolerance: ±2%.
- Fan output voltage: 0 V to 30 V, tolerance: ±2%.
- PSU input air temp.: -30 °C to +100 °C, tolerance: ±2 °C.

PSU alarms available through CAN Bus:

- DC Source Fail: Indicating DC input voltage outside limits (below 43 V).
- DC Out Fail: DC output voltages out of limits.
- AC Source Fail: Early warning, indicating that the AC input is interrupted and the PSU starts to operate from DC input source in 15 ms. (if a backup source is present).
- Software Fail: Indicating software is corrupted or unable to initialize.

- Over Temperature: Indicating over temperature detected 5 °C to 10 °C before shutdown.
- Fan 1 alarm: Fan 1 not operating (fan has stopped or its running speed is below specification), PSU has received a high signal (open collector) from fan tray 1 through fan connector 1.
- Fan 2 alarm: Fan 2 not operating (fan has stopped or its running speed is below specification), PSU has received a high signal (open collector) from fan tray 2 through fan connector 2.
- Fan 3 alarm: Fan 3 not operating (fan has stopped or its running speed is below specification), PSU has received a high signal (open collector) from fan tray 3 through fan connector 3.

PSU Controls available through CAN Bus:

- FORCE DC: Controls the PSU to force the usage of the DC input if usable, disregard presence of AC. If DC is outside the usable range for the PSU, the PSU shall indicate an alarm using the DC-fail output. If DC input voltage comes below 43 V ±2% and if AC is usable the PSU shall take the input power from AC, disregarding a Force-DC control input.

  NOTICE: Force DC operation on a bad DC supply PSU or Battery: Bad DC supply is defined as a DC source where the voltage drops below 43 V for a few milliseconds when the PSU is forced to operate on DC. In case of a force DC command and bad DC supply the 28.5 V output voltage is allowed to drop down to 27 V for a maximum of 5 second, while the PSU automatically switches back to AC mode and the 28.5 V rises from 27 V to 28.5 V. During this sequence the DC out alarm is suppressed.

- Fan supply output voltage is also controlled by the CAN Bus in 5 steps from 24 V to 12 V. The highest value is set by CAN Bus or automatically.
- DC operation only: Prevents AC fail alarms (and associated LED) from the PSU on CAN Bus when the PSU is supplied from DC only. If the AC supply becomes present during DC operation, the AC Source Fail alarm circuit is automatically be reactivated.
- AC operation only: Prevents DC fail alarms (and associated LED) from the PSU on CAN Bus when the PSU is supplied from AC only. If the DC supply becomes present during AC operation, the DC-Fail alarm circuit is automatically reactivated.
- No Fan 1: Prevents Fan 1 alarm (and associated LED) when no fan 1 is connected. If the Fan1 becomes present during operation, the Fan1 alarm circuit is automatically reactivated.
- No Fan 2: Prevents Fan 2 alarm (and associated LED) when no fan 2 is connected. If the Fan2 becomes present during operation, the Fan2 alarm circuit is automatically reactivated.
- No Fan 3: Prevents Fan 3 alarm (and associated LED) when no fan 3 is connected. If the Fan3 becomes present during operation, the Fan3 alarm circuit is automatically reactivated.
- Fan Factor: Fan factor is used to determine automatically calculated Fan supply voltage - the higher factor is specified the higher voltage is calculated. The Fan Factor range is 0.5 - 2.0 (by default 1.0). In systems with only one BR this factor is typically set to 1.0.

See the *MMI Commands* manual for additional information on commands and parameters.

11.1.2
Backup Battery

The Power Supply Unit (PSU) handles the automatic switchover to a backup battery in the event of AC power supply failure. The MTS charges a backup battery during normal AC operation. The backup battery normally is located near to the cabinet.

This battery is connected to the DC connector on the front panel of the PSU through Junction Panel. Refer to Hardware Installation on page 89 and Interconnection and Internal Cabling on page 163 for more information.

NOTICE: The recommended batteries to be used are a Valve Regulated Lead Acid (VRLA) recombination type, with -48 VDC nominal. Such as Enersys Power safe VFT type.

11.1.2.1
Backup Battery Charging Procedure

NOTICE: Selected Operation Mode: AC Operation

The backup battery charging output voltage is 40.5VDC to 57VDC and output current 0 to 6A.

A temperature sensor monitors the backup battery temperature to ensure optimum charging.

Available charge current is reduced linearly with increasing temperature from 6A to 0A when the PSU input air temperature increases from +30 °C to +60 °C

Charge voltage decreases with increasing battery temperature with the ratio of -72mV/C, starting with 56.88VDC +/-1% at -10 °C and ending with 52.56 VDC +/-1% at +50 °C

The PSU charges the backup batteries on the following conditions (**DC In Status** LED is flashing fast (0.5 s) red-green):

- Temperature range*:-10 °C to +50 °C
- Battery Low Voltage start up:40V -5%/+1%
- Battery Low Voltage Warning:43V ±2%

The PSU stops charging the backup battery on the following conditions:

- Internal PSU temperature:> 100 °C
- Battery Temperature*: -12.5 °C
- Battery Temperature*:> 53 °C

*When a temperature sensor is connected to the battery and PSU. If the battery sensor is not connected the battery will be charged with 54.24 ±1%VDC as if the battery temperature was 25 °C. The battery temperature monitored through CAN Bus will show 100 °C.

11.1.3
Fans

The PSU supplies fans, which are located in the fan trays under the module cage. For more information on fans, see Cooling Fans on page 367. The PSU DC output voltage dedicated for fans is 12 to 24VDC and the output current is 1 A for each fan.

Three fan output connectors supply three fan trays with two fans connected in parallel in each fan tray.

Fan supply output voltage can be automatically regulated as a function of PSU internal (ambient) temperature and its output power. Fan supply output voltage can also be controlled by the CAN Bus in 7 steps from 24V to 12V. The highest value wins – automatic control versus CAN control.

At an ambient temperature below -10 °C the fans are stopped and restarted again at -8 °C. The fan supply ramps up to 24V output for a few seconds in all start up situations.

11.2
Power Supply Unit (PSU) Indicators, Switches, and Connectors

The following figure shows the positions of indicators, switches and connectors on the PSU front panel.

Figure 185: PSU Front Panel

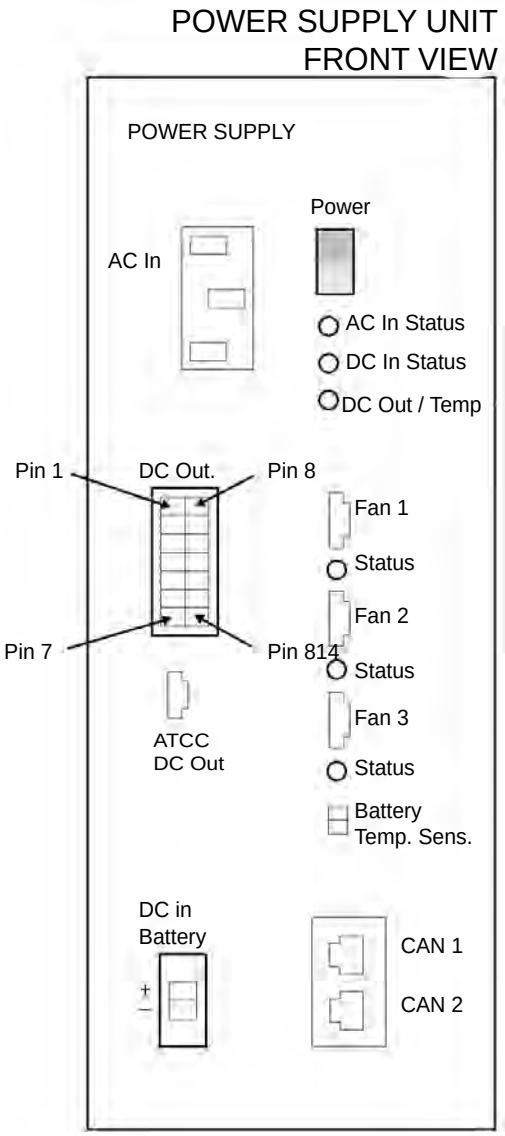

11.2.1

PSU LED Indicators

The following table lists and describes the PSU LED indicators and Figure 185: PSU Front Panel on page 361 shows their position.

Table 101: Power Supply Unit LED Indicators

LED Name	Color	Condition	Indications
AC In Status (AC input indicator)	dual color: LED green/red	AC input voltage is present and within limits	Green - solid
		AC input voltage is not present or below limits	Red - solid

LED Name	Color	Condition	Indications
		DC operations only mode	LED off or Orange – solid[1]
DC In Status (DC input and charging indicator)	dual color LED: green/red	PSU is supplied from DC input	Green - solid
		battery is being charged	Green/red flashing fast (2Hz)
		backup battery or a DC source supplies the PSU and the source voltage drops below 43VDC ±3%	Green/red flashing slow (0.5Hz), shifting between red and green
		No source connected to DC input or the DC voltage is below 40,5V	Red - solid
		AC operations only mode	LED off or Orange – solid[1]
DC Out / Temp. (DC output and temperature indicator)	dual color LED: green/red	DC output voltages are present and within limits	Green - solid
		One or more of the output voltages failed	Red - solid
		Over temperature is detected, 5 -10 C before shutdown	Red - flashes
		PSU is in standby mode	LED off
Fan # Status (Fan indicator # near fan connector #)	dual color LED: green/red	Fan # programmed to operate and Fan # connected, operating and fan failure signal is high	Green - solid
		Fan # connected but programmed not to operate or Fan # voltage is out of limits or the fan failure signal is low	Red - solid
		Fan # not connected and programmed not to operate	No light
		Fan # not connected, at start up, but should have been as per CAN command	Red - flashing
LED indication in boot mode (firmware update through CAN)			

[1] in kits GMPN4227A and earlier

LED Name	Color	Condition	Indications
Upper 3 LEDs (AC In Status, DC In Status and DC Out/ Temp.)	3 dual color LEDs: green/red	only boot loader is running (meaning that the boot loader waits for an .exe file)	3 LEDs blinking together: R (red) R R -> G (green) G G, with 1 Hz frequency
		boot loader is loading a new hex file: (loading status)	R R G -> R G R-> G R R->... (circulating green LED)
Fan indicators 1 to 3		always	Red - solid

11.2.2
PSU Switch

Table 102: Power Supply Unit Controls on page 363 describes the PSU switch and Figure 185: PSU Front Panel on page 361 shows its position.

Table 102: Power Supply Unit Controls

Control	Description
ON/OFF Switch	This switch disconnects DC outputs and charging currents.

NOTICE:
When the power switch is turned off the PSU still consumes 2 mA.

If left connected to the battery for a very long time with no mains power, it could discharge the battery.

11.2.3
PSU Connectors

Table 103: Power Supply Unit Connectors on page 363 lists and describes the PSU connectors and Figure 185: PSU Front Panel on page 361 shows their position. For more information on PSU cabling, see Interconnection and Internal Cabling on page 163.

Table 103: Power Supply Unit Connectors

Name of Connector	Type	To/From	Comment
CAN1	RJ45	Site Controller	CAN Bus interface
CAN2	RJ45	Duplexer/ Post Filter/ ATCC/ Site Controller/ Terminator	CAN Bus interface
DC In Battery	Phoenix (2 pin)	Junction Panel	DC input and backup battery charging
AC In	IEC (high temperature version, male)	Junction Panel	AC input

Name of Connector	Type		To/From	Comment
Battery Temp. Sens.	MOLEX (2 pin)		Junction Panel	Connection with the backup battery temperature sensor
ATCC Out	MOLEX (2 pin)		ATCC	DC power supply for ATCC
DC Out	MOLEX (14 pin)		2 Base Radios and Site Controller	DC power supply
	Pin 1 - 3	GND	Base Radio	
	Pin 8	+7 V		
	Pin 10 - 11	+28.5 V		
	Pin 4 - 6	GND	Base Radio	
	Pin 9	+7 V		
	Pin 12 - 13	+28.5 V		
	Pin 7	GND	Site Controller	
	Pin 14	+28.5 V		
Fan 1	MOLEX (4 pin, male)		Fan 1	DC supply for Fan 1
	Pin 1	+Vfan		
	Pin 1	-Vfan		
	Pin 1	-Vfan		
	Pin 1	Alarm		
Fan 2	MOLEX (4 pin, male)		Fan 2	DC supply for Fan 2
	Pin 1	+Vfan		
	Pin 1	-Vfan		
	Pin 1	-Vfan		
	Pin 1	Alarm		
Fan 3	MOLEX (4 pin, male)		Fan 3	DC supply for Fan 3
	Pin 1	+Vfan		
	Pin 1	-Vfan		
	Pin 1	-Vfan		
	Pin 1	Alarm		

11.3 Replacing the Power Supply Unit (PSU)

See the PSU power up sequence in Powering Up the MTS on page 154.

For a list of available FRUs, see Field Replaceable Units (FRUs) on page 478.

Process:

1. Remove the PSU, see Removing the Power Supply Unit (PSU) on page 365.
2. Install the Power Supply Unit into the cabinet, see Installing the Power Supply Unit (PSU) on page 365.
3. Update the mapping list with the new unit TrackID, see Updating the Mapping List with the New PSU TrackID on page 365.

11.3.1
Removing the Power Supply Unit (PSU)

Procedure:

1. Switch OFF the Power Supply Unit.

   WARNING:
   Make sure that the facility power outlet is off to prevent accidental contact with high energy and injury to personnel.

2. Remove all cables.
3. Remove two M4x10 Torx 20 screws which secure the PSU front panel to the module cage. Save screws and washers for reuse. The washers are required in Installing the Power Supply Unit (PSU) on page 365, step 2.
4. Pull out the Power Supply Unit from the module cage.

11.3.2
Installing the Power Supply Unit (PSU)

Procedure:

1. Place the Power Supply Unit on the slide rails in the module cage and push it to the back.
2. Secure the Power Supply Unit to the module cage with the two M4x10 Torx 20 screws.
3. Connect the power supply cables and optional backup battery cables (AC in, DC in / battery).
4. Connect remaining cables according to labels attached before PSU removal.
5. Switch ON the Power Supply Unit.
6. Check the LED indicators to verify the PSU is operating correctly. See *MTS LiTE, MTS 2 and MTS 4 Installation, Configuration and Basic Service Manual*.

11.3.3
Updating the Mapping List with the New PSU TrackID

Procedure:

1. Log on to the Site Controller.
2. Use the following MMI command to view the mapping list: `can check_mapping`.

   Step example:

```
SC> can check_mapping
Units are present:
Device Track ID
DPM 1 JTH0500101
```

```
DPM 2 JTH0500105
Units are not present:
PSU 1 JTH0500200
Track ID not mapped:
JTH0500102
```

3 On the list, locate the unit that you have removed and that is indicated as `Units are not present`.

4 Delete old CAN Bus unit from the CAN Bus unit mapping list. Use `can remove_mapping` ***<Device>***, where ***<Device>*** is the old unit name.

Step example:

```
SC> can remove_mapping psu 1
```

5 Add new CAN Bus unit to the CAN Bus unit mapping list.

NOTICE: The new unit Track ID is present on the replaced unit label and indicated as `Track ID not mapped` in the list shown in step 2.

Use `can add_mapping` ***<Device><TrackID>***, where ***<TrackID>*** is a Track ID of the new unit and ***<Device>*** is the new unit name: psu X, where X denotes a digit between 0 and 2.

Step example:

```
SC> can add_mapping psu 1 JTH0500102
```

6 View the updated mapping list using the `can check_mapping` command and check that there are no units labeled as `Track ID not mapped` or `Units are not present .`

Chapter 12

Cooling Fans

One or more fan modules generate an airflow to manage the temperature within the MTS cabinets.

12.1 Cooling Fans Overview

Each fan module consists of two fans. A sensor monitors the fans revolution and in the event of failure, an alarm is generated.

NOTICE: Low power configurations of MTS LiTE and MTS 2 can optionally operate with cooling fans.

Figure 186: MTS Fan Kit

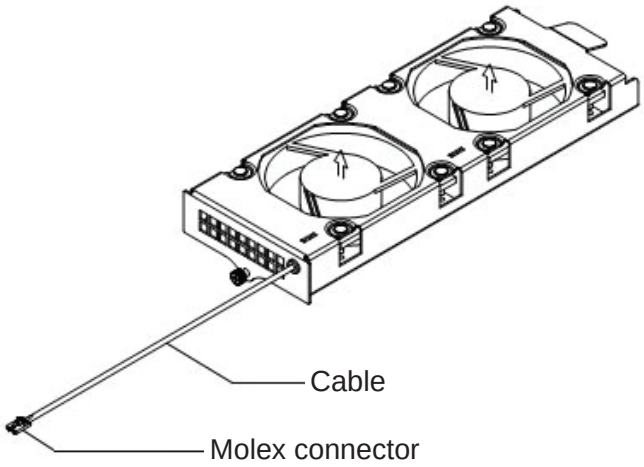

12.2 Cooling Fans Theory of Operation

The MTS card cage contains fan kits which reside below the modules. The PSU supplies and controls the three fan kits speed (max two for MTS LiTE) to reduce the noise in normal temperature environments. The fan speed is based on the temperature of the modules. The latter require that the Site Controller software monitors the module temperatures and controls the fans speed through the CAN Bus.

MTS LiTE and MTS 2 offer configurations which do not need fans. The temperature range is from -30 °C to 55 °C. If the temperature range is extended to 60 °C, two fan kits for MTS LiTE or three fan kits for MTS 2 need to be mounted. MTS 4 requires fans for all configurations. There is no need for the fans in MTS 2 for the low power PA BTS configurations. In other configurations, three fan kits are needed at the bottom of the card cages. There may be a reliability issue with the fans if operated below -10 °C. At an ambient temperature below -10 °C, the fans are stopped and restarted again at -8 °C. The fan supply ramps up to 24 V output for a few seconds in all start up situations.

NOTICE: The Site Controller Application automatically detects if you use a fanless configuration and causes the Base Radio Application to limit the power output.
The Test Application **does not** limit the power output automatically, so it is not recommended to use the Test Application to run a station in the fanless configuration in a high power mode. Testing the high power mode in the Test Application can be performed only by authorized technical personnel.

12.2.1
PSU Fan Control

The Power Supply Unit (PSU) contains three fan supply outputs with LED indicators.

Three fan connector outputs supply three fan kits with two fans connected in parallel in each fan tray.

The FAN output specifications are:

- Output Voltage: from 12 to 24 VDC ± 5 %
- Output Current: 1 A for each fan connector output

The fans supply output voltage is linear dependent on the total power delivered by the PSU and the ambient temperature. The fan supply starts with 24 V output for a few seconds.

For PSU LED indications, see PSU LED Indicators on page 361.

There are several MMI commands which control the fans:

- `psu` ***<PSU number>*** `get fan_voltage`
- `psu` ***<PSU number>*** `set fan_speed`
- `psu` ***<PSU number>*** `get fan_speed`
- `psu` ***<PSU number>*** `set fan_config`
- `psu` ***<PSU number>*** `get fan_config`
- `psu` ***<PSU number>*** `start_fan`

For description of the PSU fan commands, see the *MTS Man Machine Interface Commands* manual.

12.2.2
Alarms and Controls Available Through PSU CAN Bus Interface

The fan alarms available through the CAN Bus:

Fan 1 alarm
Fan 1 not operating, PSU received a High signal (open collector) from fan tray 1 through fan connector 1.

Fan 2 alarm
Fan 2 not operating, PSU received a high signal (open collector) from fan tray 2 through fan connector 2.

Fan 3 alarm
Fan 3 not operating, PSU received a high signal (open collector) from fan tray 3 through fan connector 3.

The fans controls available through the CAN Bus:

No Fan 1
Prevents Fan 1 alarm (and associated LED) when no fan 1 is configured.

No Fan 2
Prevents Fan 2 alarm (and associated LED) when no fan 2 is configured.

No Fan 3

Prevents Fan 3 alarm (and associated LED) when no fan 3 is configured.

12.2.3
Airflow

MTS LiTE:

The card cage has a clear opening in the bottom front and small holes in the side and back. Ambient airflow enters at the bottom of the front, back and sides and passes up through the modules. The optimal solution is to allow the air inlet from all sides. At the top of the card cage there is enough space for the air to distribute and spread before passing out of the venting grill at the top. If there is nothing in close area to sides, the air can also exit here. The airflow routing is the same with or without fans.

Figure 187: MTS LiTE Airflow

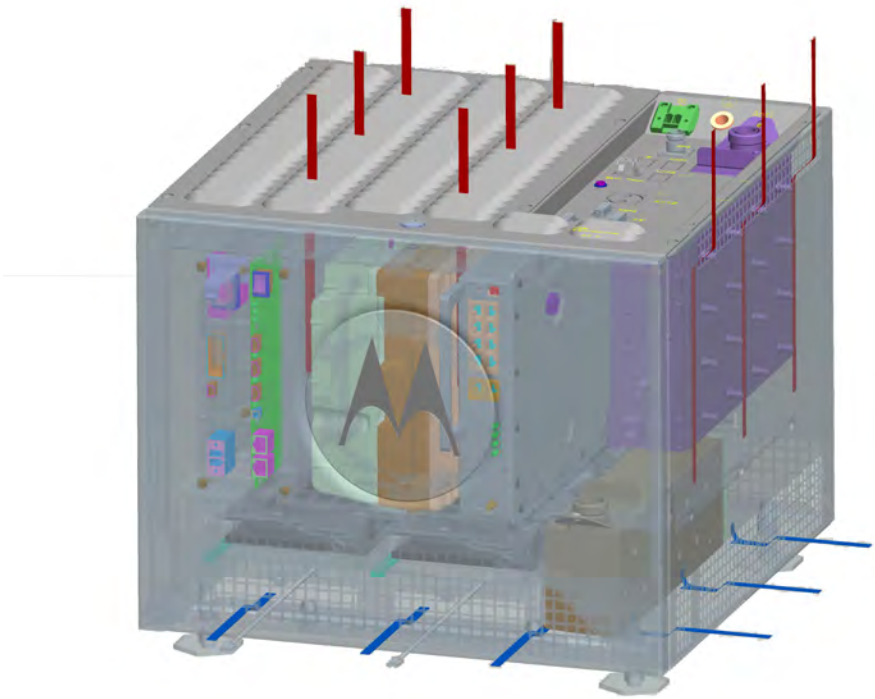

MTS 2:

The 2 BR card cage has a clear opening in the bottom front and small holes in the side and back. Ambient airflow enters at the bottom of the front, back and sides and passes up through the modules. The optimal solution is to allow the air inlet from all sides. At the top of the card cage there is enough space for the air to distribute and spread. It then passes up through the filter section and out of the venting grill at the top. If there is nothing in close area to sides, the air can also exit here. The airflow routing is the same with or without fans.

Figure 188: MTS 2 Airflow

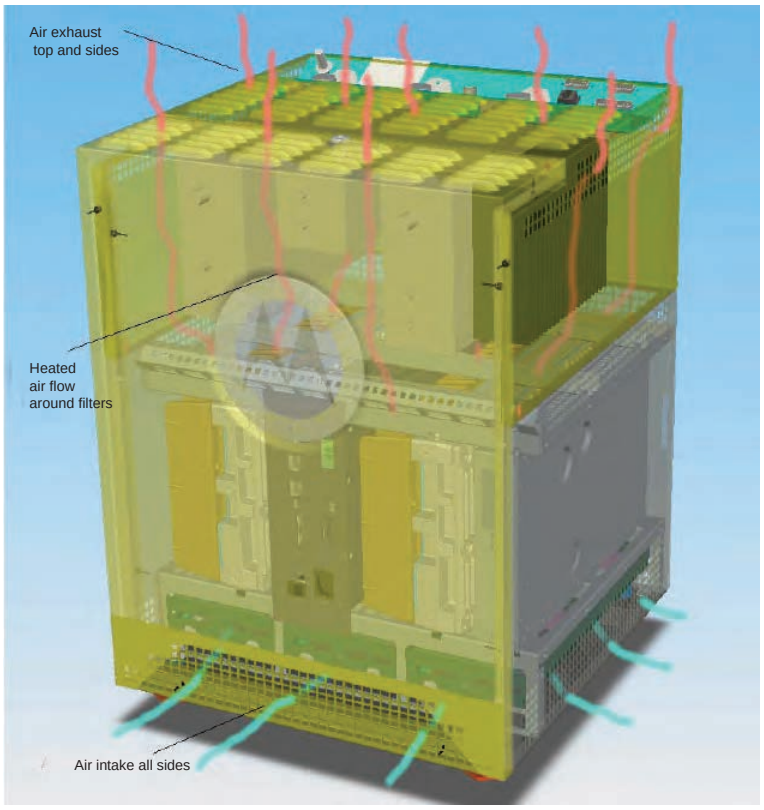

MTS 4:

In MTS 4 the airflow is different. The additional depth and width of the cabinet are used to guide and separate ambient air intake and heated air outlet. For both card cages the main airflow of ambient air enters at the front. At the bottom card cage the air can enter from all sides. For the top card cage the air has to pass in front of and behind the bottom card cage. In the front, between the modules and the cabinet door. In the back, between the bottom card cage back and the back of the cabinet. The flow is obstructed by an insert which guides the hot air from the bottom card cage out to the sides and up between the top card cage and the cabinet sides. The exhaust from the top card cage could be partly obstructed by a Cavity Combiner situated above. The exhaust can occur on all sides. No obstructions are inserted. Due to the obstructions in the airflow, fans are required for all configurations of MTS 4.

The fans have a low rpm alarm indication. Each fan module (part no. WALN4381) has two fans inside. In case of failure, one of the fans still gives an airflow. Therefore the fan module is not considered a periodic maintenance component, but is only replaced when it fails.

Figure 189: MTS 4 Airflow

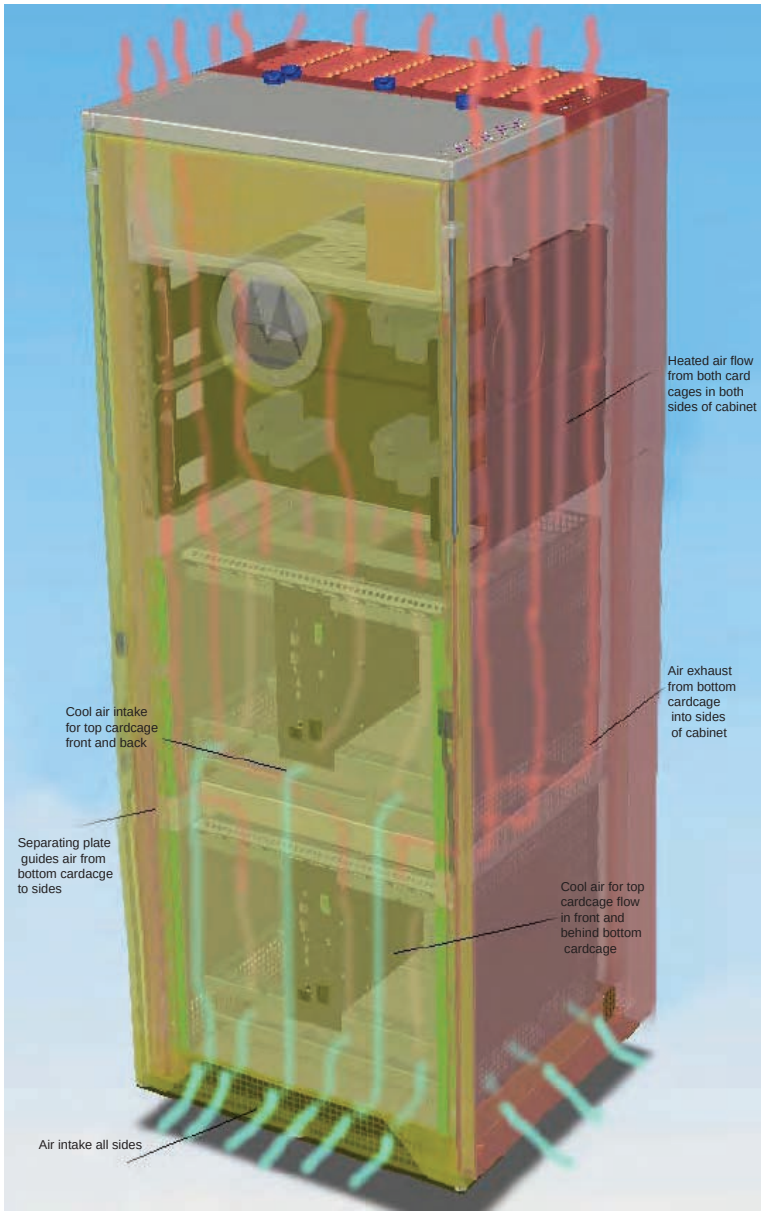

12.2.4
Cooling

Natural convection cooling is applied. For example there is no fan when MTS 2 operates with a load of 295W for 2 BRs, low power PA, plus a charge current of 3 A at + 30 °C.

Forced air from fans placed below units is used when for example MTS 4 operates with a load of 640W for MTS 4 with 2 BRs, MTCC, high power PA plus a charge current of 6 A at + 30 °C.

For all configurations of MTS, see Table 12: Typical Power Loads and Heat Dissipation Values – Expansion Cabinet 400 MHz BR-Arch-1 Configuration on page 80

12.3

Replacing the Cooling Fans

Procedure:

1. **WARNING:** When unplugging the connector from the PSU, wait a few second for the fans to stop.

   Open the housing of the cabinet of MTS and unplug the connector from the PSU.
2. Unlock the fan kit by unscrewing the M3x8 screws with serrated washers.
3. Slide out the fan kit from module cage.
4. Insert the new fan kit into module cage.
5. Secure the fan kit by screwing M3x8 screw with a serrated washer.
6. Plug the connector into PSU.

Chapter 13

MTS Troubleshooting

13.1 Site Controller Troubleshooting

The built-in system troubleshooting intelligence is mainly accessed through the Site Controller and Base Radio controller(s) LEDs, Man-Machine Interface (MMI) status and fault indications.

13.1.1 Site Controller Fault Indications

This section provides fault indications for the Site Controller.

Some indications list several possible failures along with corresponding corrective actions. If a failure is isolated to the Site Controller, the suspected module should be replaced with a new one (For a list of available FRUs, see Field Replaceable Units (FRUs) on page 478. This restores the system to normal operation as quickly as possible.

Suspected Site Controllers should be shipped to the appropriate Motorola Solutions repair depot for repair.

Fault indications should be considered in the order shown in Table 104: Site Controller LED Fault Indications on page 373.

13.1.2 LED Fault Indications

Table 104: Site Controller LED Fault Indications

Indication	Possible Failure	Corrective Action
All LEDs: OFF	Power Supply switch is OFF or power supply is damaged	• Check if power supply switch is ON • Verify power to the Site Controller cabling • Check LEDs on PS (power supply) • Replace PS (power supply)
Active LED: Amber BTS Alarm LED: RED	Application started after Booting, or failed activation, SC not active	If it is not booting / startup phase: • Check the Standby Site Controller cabling, connections to all units • Check its status of ports and links
Active LED: GREEN Mode LED: GREEN BTS Alarm LED: RED GPS LED: GREEN	WAT (Wide Area Trunking) with problem Eg. IAC,	• Check status of appropriate FRUs: atcc, dpm, psu (see can bus problems) • Check ports and links state: `port`, in case of problems check all cabling connections • Check the status of IAC inputs `status`

Indication	Possible Failure	Corrective Action
Mode LED: Green	E1/X.21 relay not energized Inactive, Site Controller stand-by	• Check site link failure: `.sitelink`, `status sc` • Check cabling, replace cabling if needed
Active LED: RED	Failed Site Controller or power up	• Replace FRU
GPS LED: RED	No GPS signal, no connection to remote GPS, or non-synchronized mode	• Check if GPS antenna is connected • Check `status sri`
BTS Alarm: Amber or Red	BTS alarm, External alarm, VSWR alarm, CAN Bus problems	**BTS alarm:** • Check status of BTS: `status bts`, `status bts -l` Verify status of components (Normal) **EAS alarm:** • Check status of alarm system: `status eas -p9` alarm when external alarms are activated. **VSWR alarm:** • Check status of BR `status br`, `brlock` if BRs are locked and dekeyed VSWR was probably too high, unlock BRs with: `brlock -clearall` **CAN bus problems:** • Check CAN bus registration table: `can check_mapping`* • Verify the registration table with existing FRU configuration • If units not present exist, check cabling (caution: all units connected in series). try to reset or reboot `can reset`*, `can reboot`* • If did not help may try to upgrade units software or replace faulty unit • If units not present doesn't exist – remove entry from registration table • If TrackID is not mapped, probably registration table not properly updated Error detected: • Get appropriate unit status / alarm to see details about possible alarm cause • If cause is in wrong configuration (wrong VSWR thresholds or fans not started) modify it. If alarms are considerably higher than the default values, investigate a potential hardware issue with the ATCC

Indication	Possible Failure	Corrective Action
		• If FRU doesn't work properly, try to upgrade code, or reset unit - If problem still exists replace faulty unit with new one BR configured loss: • Check state of BRs (br configured is missing) `status sc -all`, `status br` *) CAN bus commands
BR1 or BR2 or BR3 or BR4 or Service LED: OFF	Ethernet link not present	• Check if Ethernet cable is connected • If still no LED indication, replace the cable
E1 LEDs: Amber	Errors FE, CRC, BPV, PD	• Verify the cabling • Check if the cable is plugged to right connector • Replace E1 cable if no change • `status bsl`
E1 LEDs: RED	Primary E1 failure LOS, Link down	• Verify the cabling • If no change replace E1 cable

Figure 190: Site Controller LEDs

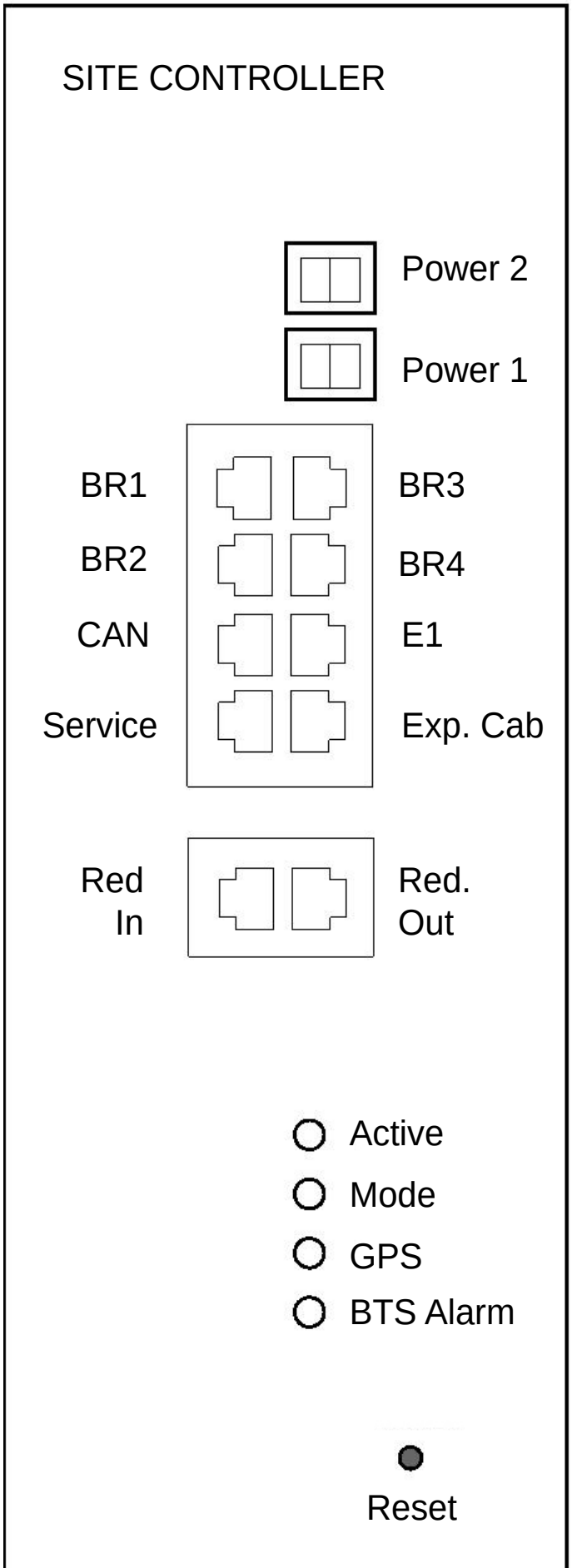

13.1.2.1
Troubleshooting Flow Chart

Figure 191: Troubleshooting Flow Chart

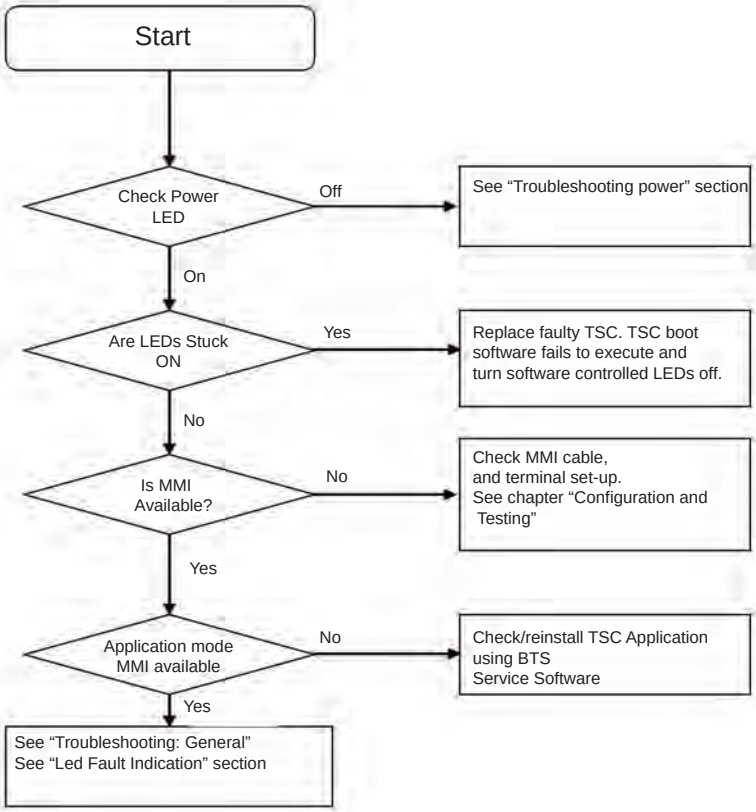

13.1.2.2
Troubleshooting: Power

- Check for Power Supply Unit failure.
- Verify power (voltage and polarity) on rear connector. If power is present and correct then replace the Site Controller. Otherwise check for the Site Controller power supply cabling fault.

NOTICE: Ensure that the polarity of DC cable connection is correct, as it is reversed in comparison to MBTS.

13.1.2.3
Troubleshooting: status sc

This section details usage of the Application mode MMI command `status sc` for general troubleshooting and to determine the Site Controller status.

Use the `status sc` command. Observe the Overall Status field of the resulting output and proceed as follows:

- If Overall Status = Active – ***<state>*** / ***<reason>***, this is an indication that the Site Controller is currently active, together with the site reference state and the reason for that state. These states and reasons are explained in Table 105: Site Reference States – status sc on page 378 and Table 106: Site Reference Reasons on page 378.
- If Overall Status = SC is going active – waiting for BRs, the Site Controller may be unable to communicate with the BRs. Waiting for the Site Controller configuration file load, the configuration file may be corrupt or is not present. See LED Fault Indications on page 373 and Troubleshooting: SC Config File on page 379.

Table 105: Site Reference States – status sc

Site Reference State	Explanation
UNKNOWN	The site reference is initializing - this is a transient state that may persist for a few minutes at start-up.
ENABLED SYNC	The site reference is fully trained to GPS - This is the highest level of functionality.
DISABLED	The site reference is not working.
FREE-RUN SYNC	This is the first level of fallback - The site reference continues to provide its highest level of service in this state until the free run timer expires.
NON-SYNC	This is the second-level fallback - The site reference is providing service however any feature that needs sites to be synchronized may be impaired.
NON-SYNC ADJ-REQUIRED	The site has been operating in its 2nd level fallback mode for too long (> 350 days) and should be disabled by the operator.
ENABLED NON-SYNC	The site has been configured to operate in its second-level fallback mode (FNC) to enable start-up without GPS.

Table 106: Site Reference Reasons

Site Reference Reason	Explanation
NO REASON	Normal operation - no explanation needed
1PPS LOST	The 1PPS timing source from the GPS is not present.
FREE RUN TIMER EXPIRED	The SR has been free running for longer than the time configured during installation.
UHSO AGEING	The UHSO (Ultra High Stability Oscillator) is approaching end of life and requires replacing soon.
SITE REFERENCE ALARM	An unspecified site reference condition has occurred.
FREQUENCY CALIBRATION TIMER EXPIRED	The SR has been free running without GPS for over 350 days - GPS calibration is required to ensure RF frequency stability compliance.
GPS OK	The GPS receiver is supplying a valid 1PPS timing source.
GPS AND NTS LOST	GPS, peer SC reference (second SC in the MTS with two SC), and NTS connection is lost. It means that at least NTS must be made available otherwise you need an adjustment

Site Reference Reason	Explanation
	of the SC internal clock before the expiry of the calibration timer. The adjustment of the SC internal clock is automatic. SC needs only a reference source to align with. It can align with GPS, NTS, or peer SC with properly working GPS. Detailed information on the expiry time may be obtained from the status sri -gps or status sri commands.

13.1.2.4

Troubleshooting: SC Config File

The SC does not boot or operate correctly and GPS does not start training unless a valid configuration file is stored in its flash filing system. Use the method described in Troubleshooting: General Check of a Site Controller File on page 380 to ensure that either **tsc.cf.1** or **tsc.cf.2** is selected as the current file, and is shown as valid.

13.1.2.5

Troubleshooting: status bts

The following table details usage of the Application mode MMI command `status bts` for general troubleshooting and determining the BTS subsystem status.

Table 107: Site Reference States – status bts

Site Reference State	Explanation
BRINT	Module fault
BRMTS	Status of the BR, whether it is keyed or not. Can report trap status of disabled with reason SC link failure indicating that the ethernet connection between the BR and SC is down
BRPORT	Reports status of BRs Ethernet ports whether up or in fault state
BRREC	Reports status of the BR receiver paths and reports, for example, a receiver signal problem. In this situation login, to the BR and check output of `get alarms` to confirm the RX path is in alarm
DPMINT	Reports status of Digital Power Meter. Check the DPM is mapped on the CANBUS. Could be an indication of hardware fault with the DPM if it cannot be re-mapped onto the CANBUS or is not responding to commands if mapped on CANBUS
EXT	Reports on configured EAS alarms and will advise which alarm contact is active
FAN	Reports status of the fan kits
MTS	Gives the status of the site, whether it is in Wide, Site or No Trunking and a reason for example No Control Channel
SCINT	Module fault
SCPORT	Status of the Site Controllers ethernet ports
SCREF	Gives status of the GPS signal and timing

13.1.2.6
Troubleshooting: BRC Config Files and Code File

The BRC does not boot or operate correctly unless a valid configuration file and code file is stored in the flash filing system of the Site Controller. Use the method described in Troubleshooting: General Check of a Site Controller File on page 380 to ensure that the file shown in the following table is valid for the BR of interest. For Code File, ensure that either **brc.code.1** or **brc.code.2** is selected as the current file.

NOTICE: Config files are only present for installed BRCs.

Table 108: BRC Config File Troubleshooting

BR Cabinet	BR Position	Filename
1	1	brc01.cf
1	2	brc02.cf
1	3	brc03.cf
1	4	brc04.cf
2	1	brc05.cf

13.1.2.7
Troubleshooting: General Check of a Site Controller File

To check the validity of a particular file in the Flash File System of the Site Controller, it is necessary to use the `attrib` command as explained below.

NOTICE: The `attrib` command works in Site Controller application as well as in boot1 mode.

This example looks at the configuration file of the Site Controller.

1. Use the `attrib` command to produce a listing of all files on the Site Controller. Check if the files of interest do not have any warning after their details. This shows only a small part of the typical output:

```
cn--r- tsc.cf.1        mts1v1          12/03/2012_13:42:14
----ra tsc.cf.2        mts1v2          24/01/2012_11:23:11
cn--ra tsc.code.1      R084007         24/01/2012_11:18:49
----ra tsc.code.2      R084007         10/01/2012_09:37:28
------ brc09           -               -
---w-- brc09.cf.1      -               -
---w-- brc09.cf.2      -               -
```

   In this example tsc.cf.1 looks like a valid file, whilst brc09.cf.1 has a ‘w’ attribute so it is not valid.

2. Use the `attrib tsc.cf*` command to produce a listing of the configuration files attributes of the Site Controller.

```
SC: attrib tsc.cf*
cn--r- tsc.cf.1        mts1v1          12/03/2012_13:42:14
----ra tsc.cf.2        mts1v2          24/01/2012_11:23:11
```

   Note which file has the ‘c’ (Current) attribute and ensure that it also has the ‘r’ (read) attribute. If the file has the ‘w’ attribute, it is not valid.

If there is no valid file then download it to the Site Controller again, using either DIMETRA BTS Service Software or Software Download (SWDL).

To check the version of the running Site Controller application, use the `ver` command:

```
SC: ver
Dimetra Site Controller
Application Version      : MTS_TSC_APP-R08.40.07
Release date             : Jan 16 2012 17:42:16
Software Part No.        : PC895F00B000084007
Boot0 Version            : MTS_TSC_BOOT0-R01.40.01
Boot1 Version            : MTS_TSC_BOOT1-R08.40.01
Copyright (C) 2011-2012, Motorola Solutions, Inc.
All rights reserved
Unauthorised Access Prohibited
SC:
```

13.1.3
MMI Fault Indications

Diagnosis of fault conditions are divided into diagnosis of the GPS/site reference and the site link.

13.1.3.1
Troubleshooting: GPS and Site Reference Faults

The timing subsystem within the MTS consists of two major components:

- the GPS receiver
- the Site Reference

The `status sri` command and its sub commands provide the capability to diagnose GPS and Site Reference faults. An output similar to the one shown below is obtained for a fully functional internal 8 channel receiver.

Site Reference Operating OK	: YES
Site Reference State	: MAINTAIN PHASE LOCK
Site Reference Configuration	: ASC
Site Reference 1 PPS Input Status	: VALID
GPS Operating OK	: YES
GPS STATE	: GPS 3D FIX
GPS Satellites Tracked	: 9
Sync Free Run Available (Minutes)	: 240
Unsync Free Run Available (Days Hours Mins)	: 2879 10 27
Last Calibration Date Time	: Thu Feb 1 08:40:25 2007
Calibration Due Date Time	: Fri Jan 30 08:40:25 2015
GPS Time	: Thu Feb 1 08:42:38 2007
UTC Time	: Thu Feb 1 08:42:24 2007
Local Time	: Thu Feb 1 10:42:24 2007

Precise UTC Time Mode	: YES
TETRA Slot	: H6121 M49 F15 S4
Synchronized	: YES

The following fields are of particular relevance during fault diagnosis:

- **Site Reference Operating OK**

  YES: This indicates that the site reference is providing timing services to the Site Controller.

  NO: The site reference is not operating, therefore the MTS cannot provide any service. Examining the state of items below indicates the reason for this condition.

- **Site Reference State**

  Site Reference State = START UP: The Site Controller is starting up and the site reference has not been fully initialized yet. The site reference and the MTS is not operational. This is a normal transitory state.

  Site Reference State = MAINTAIN PHASE LOCK: This is a normal operational mode of the site reference. The MTS is synchronized with any other MTS that has attained this state, this means that type 1 handovers and any other feature that require sites to be fully synchronized is available.

  Site Reference State = SYNCHRONISED FREE RUN: This is a fallback state which indicates that the MTS is not tracking sufficient GPS satellites to provide a timing reference to the site. The MTS is capable of operating with no loss of performance for up to 12 hours (dependent on configuration). If this condition occurs frequently or persists, the health of the GPS system should be assessed. See GPS Tracking criteria and GPS Antenna evaluation in section 4 of this manual.

  Site Reference State = UNSYNCHRONISED FREE RUN: This is a fallback state for an ASC configured MTS and the normal operating state for FNC configured MTS. When configured for ASC, the site will enter this state if adequate GPS tracking is not achieved before the configured GPS start-up timer expires or after the expiry of free run timer if the site was previously synchronized. The site is capable of operating in this mode for up to 12 months. In this state, the MTS is capable of providing all services except those that require synchronization between adjacent sites, for example, type 1 handovers.

  Site Reference State = MAINTAIN FREQUENCY LOCK: If an adequate GPS signal becomes available whilst operating in UNSYNCHRONISED FREE RUN, the MTS enters this state where the site reference calibration data is updated, thus prolonging the amount of time where service can be maintained.

  Site Reference State = DISABLED: The site reference has detected an error and is unable to provide any service. The MTS cannot provide any service whilst the site reference is in this state. The cause of this state is dependent on the configured operating mode of the MTS:

  - FNC / ASC: The MTS does not have any calibration data - The MTS needs to be run initially with GPS before FNC operation without GPS is possible.

  This condition may also be due to hardware failure within the Site Controller.

  Site Reference State = RECOVER PHASE: This state is a normal operational mode. This state indicates that MTS has acquired signal from GPS and found out that the reference GPS clock is not aligned with the MTS clock. In this state the MTS tries to align both phase and frequency of internal clock to the GPS reference clock. The recover phase can take long time, depending on how long MTS had been working without the GPS signal.

- **Site Reference Configuration**

  Site Reference Configuration = ASC or FNC: This is the installation-selected configuration of the site reference subsystem. See GPS Site Reference Operation Modes on page 135 for details.

- **Site Reference 1 PPS Input Status**

Site Reference 1 PPS Input Status = OK or NOT OK: This indicates whether a valid signal is being received by the site reference system.

- **GPS Operating OK**

  GPS Operating OK = YES or NO: This indicates whether the GPS receiver is tracking sufficient satellites to provide a timing reference input to the site reference. This parameter should be YES for ASC operation. Detailed information on the GPS receiver may be obtained from the status sri -t and status sri -gps commands. See the following section for details.

- **GPS State**

  GPS State = NOT TRACKING: The GPS receiver is not tracking any satellites. This condition may persist for some minutes after start-up. Detailed information on the GPS receiver may be obtained from the status sri -t and status sri -gps commands. See the following section for details.

  GPS State = POSITION HOLD/GPS 3D FIX: This is the normal operating state of the external/internal GPS receiver.

  GPS State = SITE SURVEY: The GPS receiver will operate in this state for several hours after an MTS is started in a new location for the first time. The GPS receiver is attempting to determine accurate coordinates to enable operation in position hold.

- **GPS Satellites Tracked**

  GPS Satellites Tracked = 0.. 12>: This is the number of satellites tracked that are available for timing.

  NOTICE: If the `status sri` MMI command indicates that there are no satellites tracked, then there may be a possible hardware fault. See GPS Receiver Detailed Troubleshooting on page 384 for further details.

- **Sync Free Run Available**

  Sync Free Run Available (Minutes): This is the number of minutes that the MTS operates without any degradation of service if the GPS receiver stops working and the site reference is configured for ASC operation. If the site reference is already in the free run state, the time shown is the balance of free run time before the MTS stops operating or switches to a lower level of service.

  Unsync Free Run Available (Days Hours Mins): This shows the amount of time the sites second-level fallback (Unsynchronized free run) is capable of operating for. If the site reference is already in Unsynchronized free run the time shown will be the amount of time the MTS is capable of operating for before calibration is required.

- **Last Calibration Date Time**

  Last Calibration Date Time: The site reference is periodically calibrated whenever an adequate GPS signal is available. The MTS is capable of providing service for up to 12 months without GPS after each calibration. This parameter shows the date and time of the last calibration snapshot.

- **Calibration Due Date Time**

  Calibration Due Date Time: This shows the date when the MTS requires calibration if the GPS receiver was to fail at this time.

- **GPS Time**
- **UTC Time**
- **Local Time**
- **UTC Time Mode**

  UTC Time Mode = Not Precise or Precise: When the timing for the site reference is being derived from the GPS receiver the UTC mode is precise.

- **Synchronised**

Synchronised = YES or NO: This indicates whether this MTS is capable of operating synchronously with any neighboring MTS.

13.1.3.2
GPS Receiver Detailed Troubleshooting

The `status sri -gps` command provides detailed information on the GPS receivers operating state. This includes a detailed satellite tracking report. The following output is from a fully functional internal 12 channel receiver. Note that this output is an example, your GPS settings may vary depending on your system.

```
GPSR Type                                : INTERNAL
GPSR Model                               : GSCi4xxx
Software Ver                             : 225
Manufacture Data                         : Unknown
GPSR Antenna Status                      : CONNECTED
GPS Satellite Tracking                   : OK
GPS State                                : GPS 3D FIX
GPS Satellites Visible                   : 12
GPS Satellites Tracked                   : 9
GPS Date Time                            : Thu Feb 21 09:17:36 2008
PDOP Status                              : GOOD
PDOP Value                               : 1.6
RAIM Protection is                       : Disabled
Latitude                                 : N50 deg1 min 57.728 sec
Longitude                                : E19 deg 56 min 21.808 sec
Altitude(Meters above GPS Ellipsoid)     : 296.69


     SatID Mode Flags C/N Ratio (dB-Hz) GNSS system
:-----------------------------------------------------
       6    8    0x00   43               GPS (1)
      19    0    0x00   49               GPS (1)
      25    8    0x00   35               GPS (1)
      16    8    0x00   49               GPS (1)
       3    8    0x00   48               GPS (1)
      15    8    0x00   39               GPS (1)
      21    8    0x00   48               GPS (1)
      18    8    0x00   50               GPS (1)
      29    0    0x00   18               GPS (1)
       8    0    0x00   43               GPS (1)
      27    3    0x00   34               GPS (1)
      22    8    0x00   54               GPS (1)
```

If `status sri -gps` returns no data or most fields are set to unknown, the internal GPS chip is most likely not operational and requires a reset. Reset the GPS chip by using the command `reset gps`.

Check GPS status by using the command `status sri -t` as shown below.

Note that this output is an example, your GPS settings may vary depending on your system.

```
GPS Receiver ID
==============
SOFTWARE VER # v3.1.5.1     SOFTWARE REV # GNSSLIB_7.3  SOFTWARE DATE
UNKNOWN
MODEL # SL869               SERIAL # UNKNOWN
OPTION LIST  UNKNOWN        MANUFACTURE DATA UNKNOWN

GPS Receiver Status:
=================

Model: SL869 - Self test results not supported.
  RTC Comm Time: N/A, Temperature Sensor: N/A
```

```
       RAM Test: N/A,           ROM Test: N/A
 1 kHZ Presence: N/A
Antenna Status : CONNECTED
  Almanac Data : NOT VALID
 Location Data : VALID
```

- The Antenna status is reported as:
  - `CONNECTED` when at least four satellites are being tracked.
  - `DISCONNECTED` when no satellites are being tracked.

    NOTICE: If the status is `DISCONNECTED`, you should verify if the cables are connected properly. If the status does not change, you should verify that the settings in TESS match the cable connection (both should be external or internal).
- **PDOP**: Positional Dilution of Precision it is a measure of geometrical strength of GPS satellite configuration. The lower value, the better accuracy.

  NOTICE: GPS antenna must be connected before the site is powered up to return this status correctly.
- If the site is being powered up in a new location for the first time, the Almanac Data and the Location data fields should display a status of Invalid. Use the `site_location -reset` command to ensure that the Almanac and Location data are cleared. The Site Controller must then be reset for these commands to take effect.
- The RAIM (Receiver Automatic Integrity Monitor) facility should be enabled to allow detection and correction of GPS errors. Refer to the *TETRA BTS Service Software (TESS) User Guide*.
- If no other fault, replace the Site Controller.

13.1.3.3
Troubleshooting Site Link Faults

13.1.3.3.1
Initial Verification

Use the `ping` MMI command to verify that the IP pathway to the two Core Routers is correct. Pings should be attempted to both Core Routers using both the default ping packet size of 32 bytes as well as using a packet size larger than the configured Frame relay fragmentation size. If router can be successfully pinged using the default size of 32, but pings using the large size are unsuccessful, this indicates an error in the configuration for Frame relay fragmentation.

```
SC: ping -s 32 172.24.16.201
Pinging 172.24.16.201 (172.24.16.201) with 32 bytes of data:
Reply from 172.24.16.201 bytes=32 time=0ms ttl=30
Reply from 172.24.16.201 bytes=32 time=0ms ttl=30
Reply from 172.24.16.201 bytes=32 time=0ms ttl=30
Reply from 172.24.16.201 bytes=32 time=0ms ttl=30
SC: ping -s 128 172.24.16.201
Pinging 172.24.16.201 (172.24.16.201) with 128 bytes of data:
Reply from 172.24.16.201 bytes=128 time=0ms ttl=30
Reply from 172.24.16.201 bytes=128 time=0ms ttl=30
Reply from 172.24.16.201 bytes=128 time=0ms ttl=30
Reply from 172.24.16.201 bytes=128 time=0ms ttl=30
SC:
```

13.1.3.3.2
Frame Relay Fragmentation

The `status frf` command displays fragmentation statistics as show below:

SC) status frf	
Transmit Frames fragmented	126
Number of fragments transmitted	12
Number of received frames	4
Number of received fragments	8
Number of ignored fragments	0
Number of discards when disabled	0

If the counter labeled "Number of discards when disabled" is not zero, this indicates that frame relay fragmentation is disabled on the Site Controller, but enabled on the remote equipment. If however, there are non-zero values for the counters labeled "Transmit Framed fragmented" and "Number of fragments transmitted" but the counters labeled "Number of received fragments" and "Number of received frames" are zero, this would indicate that the remote equipment has not been configured for FRF.20 frame relay fragmentation.

13.1.3.3.3
IP and Audio

If all is well with the site link, but there are issues with no uplink or downlink audio, the likely culprits are either the configuration of the UDP port used for voice, the CRTP configuration – or both. A quick check can be made for crtp activity by typing `status crtp`.

SC) status crtp	
Compressed Frame Count	0
Decompressed Frame Count	99
Contexts Invalidated	1
Tx Context State Packets	0
Rx Context State Packets	0
Tx Full Header Packets	0
Rx Full Header Packets	1
Discards when disabled	0

If the compressed frame count is zero, check the configuration to determine if CRTP is indeed enabled. If the decompressed frame count is zero, check the CRTP configuration on the core router to ensure this is enabled, and not set to "passive".

If the decompressed counter is non-zero, it would indicate that the Site Controller is receiving downlink audio however, the packets are not getting processed for some other reason. It should then be determined if the IP layer is discarding the received audio packets – this can be a result of not enabling header extensions with CRTP on the core router.

If there are issues with configuration for CRTP "header extensions", this is indicated by the counter labeled "UDP datagrams received for unknown ports or with other errors".

13.1.3.3.4
Site Link

Troubleshooting the Site Link essentially consists of checking the correct operation of each layer in the order starting with the physical layer.

The physical layer may be configured to be either E1 or X.21. The `status bsl` command provides different information for the two interface types.

13.1.3.3.4.1
Netcom Decoupling

Netcom Decoupling is a feature available for dual E1 links setup. When the Netcom Decoupling feature is enabled, Netcom session mapping is reported by the "status sc" command. When both links are up, Netcom mapping should be set to default, meaning primary Netcom is on PVC1 and secondary is on PVC2. The routes to primary and secondary zone controllers (ZC) are default. The following example shows dual E1 link with both PVCs up.

```
SC: status fr
PVC                                      Primary           Backup
DLCI for this PVC                             16               17
IP address of this PVC            192.168.20.16    192.168.21.17
Current status                           ACTIVE           ACTIVE
Times changed state                           7                7
Time in current state (secs)              79757            79757
Total time up (secs)                      80406            80407
Total time down (secs)                   369796           369795
Number of frames transmitted              97355            41476
Number of frames received                 99842            44213
Invalid NLPID frames received                 0                0
Invalid UI frames received                    0                0

SC: status sc

Overall Status:   Active - UNKNOWN / NO_REASON
BTS type:         MTS4
Site Status:      No Trunking - Site Failsoft (SecurityClass3)
Internal State:   AS_L_E_IDL
Site Link State:  UP
Netcom Primary:   ACTIVE_S (PVC1)
Netcom Secondary: STANDBY_S (PVC2)
Position ID:      A
Internal Temp: 49.19 DegC (Alarm at: 70.0 DegC)
SC: route show

INET route table
Destination                   Gateway                       Flags    Use
If    Metric
0.0.0.0/0                     192.168.25.1                  USPs     4
bts    0
10.0.254.0/24                 link#3                        UC       0
eth1   0
10.0.254.1                    link#1                        UH       0
lo0    0
10.1.253.0/24                 link#2                        UC       3
eth0   0
10.1.253.1                    link#1                        UH       0
lo0    0
127.0.0.0/8                   127.0.0.1                     UR       0
lo0    0
127.0.0.1                     127.0.0.1                     UH       8
lo0    0
```

```
192.168.20.0/24                link#5                        UC        0
pvc1   0
192.168.20.16                  link#1                        UH        0
lo0    0
192.168.21.0/24                link#6                        UC        0
pvc2   0
192.168.21.17                  link#1                        UH        0
lo0    0
192.168.23.0/24                link#2                        UC        5
eth0   0
192.168.23.1                   link#1                        UH        0
lo0    0
192.168.23.42                  00:0d:88:68:6e:c6             UHL       4
eth0   0
192.168.25.0/24                link#7                        UC        0
bts    0
192.168.25.1                   link#1                        UH        0
lo0    0
192.168.51.20                  192.168.20.16                 UHs
284592pvc1   0
192.168.69.20                  192.168.21.17                 UHs       40097
pvc2   0
```

The following example shows dual E1 link with PVC1 down and PVC2 up. Note that routes to both ZC IP addresses are going through PVC2.

```
SC: status fr
PVC                                      Primary           Backup
DLCI for this PVC                             16               17
IP address of this PVC            192.168.20.16    192.168.21.17
Current status                         INACTIVE           ACTIVE
Times changed state                            9                7
Time in current state (secs)                  87            79899
Total time up (secs)                       80461            80549
Total time down (secs)                    369883           369795
Number of frames transmitted               97544            41829
Number of frames received                 100028            44540
Invalid NLPID frames received                  0                0
Invalid UI frames received                     0                0

SC: status sc

Overall Status:   Active - UNKNOWN / NO_REASON
BTS type:         MTS4
Site Status:      No Trunking - Site Failsoft (SecurityClass3)
Internal State:   AS_L_E_IDL
Site Link State:  UP
Netcom Primary:   STANDBY_S (PVC2)
Netcom Secondary: ACTIVE_S (PVC2)
Position ID:      A
Internal Temp: 49.09 DegC (Alarm at: 70.0 DegC)

SC: route show

INET route table
Destination                    Gateway                       Flags    Use
If    Metric
0.0.0.0/0                      192.168.25.1                  USPs     4
bts    0
10.0.254.0/24                  link#3                        UC       0
eth1   0
10.0.254.1                     link#1                        UH       0
lo0    0
10.1.253.0/24                  link#2                        UC       3
```

```
eth0    0
10.1.253.1                    link#1                        UH        0
lo0     0
127.0.0.0/8                   127.0.0.1                     UR        0
lo0     0
127.0.0.1                     127.0.0.1                     UH        8
lo0     0
192.168.20.0/24               link#5                        C         0
pvc1    0
192.168.20.16                 link#1                        UH        0
lo0     0
192.168.21.0/24               link#6                        UC        0
pvc2    0
192.168.21.17                 link#1                        UH        0
lo0     0
192.168.23.0/24               link#2                        UC        5
eth0    0
192.168.23.1                  link#1                        UH        0
lo0     0
192.168.23.42                 00:0d:88:68:6e:c6             UHL       4
eth0    0
192.168.25.0/24               link#7                        UC        0
bts     0
192.168.25.1                  link#1                        UH        0
lo0     0
192.168.51.20                 192.168.21.17                 UHs       74
pvc2    0
192.168.69.20                 192.168.21.17                 UHs       40706
pvc2    0
```

For more information, see *TETRA BTS Service Software (TESS) User Guide*.

13.1.3.3.5
X.21 Interface

If the Site Link interface had been configured to use X.21 interface, the information provided by the `status bsl` command is as follows:

```
SC) status bsl
```

Primary Site Link State:DOWN	Speed: 0 bps	Rear port:X.21

HDLC Statistics:-	----Rx----	----Tx----
Good frames	: 0	0
Overruns | Under-runs	: 0	0
C Line | I Line lost	: 0	0
CRC/framing er-rors	: 0	
No buffers avail	: 0	
Buffer overflows	: 0	

```
Aborts              : 0
Non octet aligned   : 0

X.21 Interface:-
Clock Loss events   : 2
I Line Off events   : 0
Current Clock       : Failed
state
Current I Line      : On
state
Current C Line      : Off
state
```

- The Site Link State should be shown as UP, the number of good frames transmitted and received should be non-zero and incrementing indicating site link traffic. The presence of non-zero data in other numeric fields may indicate a possible Site Link Problem.
- Verify that the Current I Line and C Line states are shown as ON and that the Current Clock state is shown as OK.

13.1.3.3.6
E1 Interface

If the site link interface had been configured to use an E1 interface, the state of the E1 interface may be determined by inspection of the front panel LEDs on the Site Controller. E1 error conditions are indicated using its LEDs:

- If LED is AMBER FE, CRC, BPV, PD
- If LED is RED – LOS

The LEDs labeled as "1", "2", on the E1 port indicate the physical E1 port that had been configured for the Site Link using the `e1config` MMI command.

NOTICE: Contact your local Motorola Solutions representative or Technical Support to obtain the password.

If the LED is indicating LOS (Loss of signal) error is illuminated, this indicates that there is no E1 framing signal being detected on the configured port. This may be due to external cabling issues, the lack of a connection to remote E1 equipment, or simply connecting the E1 feed to the wrong E1 connector on the Site Controller. If the LED is AMBER, this indicates that:

- There are E1 framing errors currently being detected. This condition is usually transitory, however, if persistent, it indicates a configuration mismatch of the E1 framing method in use. Both ends should be either using E1 multi-frame, or double- frame, but not a mix of the two framing modes FE/CRC error.
- The remote equipment is detecting errors on the traffic it is receiving on its E1 interface – again, this may be caused through transitory errors, or a mismatched configuration.
- Electrical noise on the E1 connection, though this may also be caused by faulty remote equipment BPV error.

The information provided by `status bsl` for an E1 interface is as follows:

```
SC) status bsl
```

Primary Site Link State:DOWN	Speed: 64000 bps	Rear port:E11

HDLC Statistics:-	----Rx----	----Tx----
Good frames	: 30	10
Overruns | Under-runs	: 0	0
C Line | I Line lost	: 0	0
CRC/framing er-rors	: 0	
No buffers avail	: 0	
Buffer overflows	: 0	
Aborts	: 0	
Non octet aligned	: 0	

E1 Statistics:-		
Second timer ex-pired	: 11	Remote Alarm :0
Line Loss	: 0	Framer Rx Data Over-flow :0
Frame alignment Loss	: Failed	Framer Tx Data Under-run :0
AIS	: On	Negative Rx clock slip :0
CRC4 Error	: Off	Positive Rx clock slip :0
Errored Seconds	: 0	Negative Tx clock slip :0
Bipolar Violation	: 0	Positive Tx clock slip :0

E1 Configura-tion:-		
crc4:on crdStart:1	crd:1 ts16Skip:on	Port:1 Clock:External

For E1, the E1 statistics provide a running count of errors encountered or detected on the E1 interface. These include a count of the potential link loss errors as indicated by the front panel LEDs. For convenience, the current E1 timeslot configuration is also shown.

Line Loss

An increasing value of this statistic indicates existence of low-level E1 electric connection issues between the site and network equipment.

AIS
An increasing value of this statistic indicates that the network equipment directly connected to the site is not getting correct transmission from the far-end network equipment and it notifies the site about that fact.

Remote Alarm
An increasing value of this statistic indicates that the network equipment directly connected to the site is not getting correct E1 transmissions from the Site Controller and notifies the Site Controller of the error.

Frame alignment Loss
An increasing value of this statistic indicates that the E1 signal received by the site from the connected network equipment lost frame alignment. Each incremental increase of the statistic indicates that three or more frames have been received without alignment.

NOTICE: The growing value of the `Second timer expired` statistic is no reason for concern. The `Second timer expired` value is incremented every second no matter if the Site Link is up or down. The `Second timer expired` count does not indicate any Site Link failure.

The HDLC statistics provide a running counter of HDLC frames transmitted and received on the site link interface as shown by the "Good frames" counters. Incrementing counters with the absence of incrementing error counters such as CRC/framing errors, Aborts, or Non octet aligned errors indicates the correct transmission and reception of HDLC frames. Persistent large numbers of HDLC errors on an interface configured for E1 indicates errors in the configuration of the E1 data timeslots.

13.1.3.3.7
Frame Relay Layer

SC) status fr

PVC	Primary	Backup
DLCI for this PVC	108	109
IP address of this PVC	10.2.45.251	10.2.55.251
Current status	Active	Active
Times changed state	0	0
Time in current state (secs)	3592	2988
Total time up (secs)	3599	3599
Total time down (secs)	0	0
Number of frames transmit-ted	10238	0
Number of frames received	10236	0
Invalid NLPID frames re-ceived	0	0
Invalid UI frames received	0	0

The current configuration for frame relay, and the current state of the primary and backup PVC may be determined using the `status fr` MMI command. If both PVCs are indicated as ACTIVE, the number of state changes for each PVC, the time in the current state, and the time in an active state should be inspected to determine the stability of the two PVCs as determined by the LMI link management

protocol. If there is indication of rapid transitioning of the states of the PVCs, or the two PVCs are indicated as inactive – special attention should be given to the DLCI values displayed. If this is correct, this indicates a problem with the LMI layer.

```
SC) status lmi
LMI frames transmitted                        0
LMI frames received                           0
Number of PVC state changes                   2
Number of status inquiries tx                 0
Number of status responses rx                 0
Number of full status inquiries               0
Number of full status rx                      0
Current primary PVC state                     1
Current backup PVC state                      1
Number of discards when disabled              0
```

The frames transmitted and the frames received counters should be incrementing between successive invocations of `status lmi`. If the received counter is not incrementing, this indicates that the remote equipment is not responding to LMI inquiry packets transmitted by the Site Controller – the problem is probably external to the Site Controller. However, if the receive counter is incrementing, it would indicate a configuration issue, either with the LMI configuration, or with the configuration of the DLCIs for the PVCs, check the DLCI numbers displayed by using the `status fr` command for the DLCI numbering, and use the `display config` command to verify the configuration for LMI.

```
Site Router
-------------
CRTP enable                          : Enabled(1)
CRTP context state packet time       : 1000
CRTP session timeout                 : 3500
LMI enable                           : Enabled(1)
LMI full status polling counter      : 6
(n391)
LMI LIV time (t391)                  : 300
LMI error threshold (n392)           : 3
LMI monitored events count (n393)    : 4
Type of Service Latency Time         : 5
Frame relay fragmentation size       : 80
(bytes)
```

If LMI has been disabled in the Site Controllers configuration, no LMI exchanges take place, and the two PVCs are marked as permanently active. In normal configurations, this may be as a result of an unintended configuration error.

13.1.3.3.8
Ethernet Site Link

The following configuration parameters are available for Base Station Ethernet links:

- Physical sitelink interface
- Sitelink Type
- Passthrough
- Primary VLAN Tagging
- Primary Sat
- Primary WAN IP Address
- Primary WAN IP Mask
- Primary WAN Gateway
- Primary WAN VLAN ID
- Primary IP Tunnel Local Address
- Primary IP Tunnel Remote Address
- Primary IP Tunnel Fragmentation Size
- Secondary WAN Interface
- Secondary VLAN Tagging
- Secondary Sat
- Secondary WAN IP Address
- Secondary WAN IP Mask
- Secondary WAN Gateway
- Secondary WAN VLAN ID
- Secondary IP Tunnel
- Secondary IP Tunnel Local Address
- Secondary IP Tunnel Remote Address
- Secondary IP Tunnel Fragmentation Size
- Primary PVC BTS IP Address
- Primary PVC CR IP Address
- Primary PVC IP Mask
- Secondary PVC BTS IP Address
- Secondary PVC CR IP Address
- Secondary PVC IP Mask
- BFD Tx Interval
- BFD Tx Detect Multiplier
- BFD Protocol Status Flag
- Green Traffic Color Map
- Yellow Traffic Color Map
- QOS CIR [kbit]
- QOS CBS [bytes]

- QOS EIR [kbit]
- QOS EBS [bytes]
- QOS Coupling Flag
- Throttling algorithm
- Primary PVC PerfMon Jitter Threshold
- Primary PVC PerfMon Delay Threshold
- Secondary PVC PerfMon Jitter Threshold
- Secondary PVC PerfMon Delay Threshold

NOTICE:
For description of parameters listed above and instruction on how to configure them, see the *TETRA BTS Service Software (TESS) User Guide*.

Use the BTS Service Software tool for configuration of the Ethernet site link, especially during upgrade or migration procedures.

Encryption of the Ethernet site links can be enabled or disabled using the BTS Service Software. For the list of Ethernet site link encryption parameters, see Encrypted Ethernet Site Links on page 397.

After all parameters are configured properly and the configuration file is loaded to the MTS, the Ethernet site link configuration can be inspected by executing the `status bsl` command on the Site Controller MMI.

An example output of the `status bsl` command is shown below:

```
SC: status bsl

Option                                      Current           Next
-----------------------------------------------------------------------
 Physical sitelink interface                Ethernet          Ethernet
 Invert links for ring edge                 not applicable    not applicable
 Ethernet sitelink type                     Dual              Dual
 Passthrough                                off (auto)        auto
 Primary VLAN Tagging                       off               off
 Primary Sat                                off               off
 Primary WAN IP Address                     172.32.1.4        172.32.1.4
 Primary WAN IP Mask                        255.255.255.224   255.255.255.224
 Primary WAN Gateway                        172.32.1.30       172.32.1.30
 Primary WAN VLAN ID                        3001              3001
 Primary IP Tunnel Local Address            172.32.1.4        172.32.1.4
 Primary IP Tunnel Remote Address           172.32.1.33       172.32.1.33
 Primary IP Tunnel Fragmentation Size       358 (auto)        auto
 Secondary WAN interface                    enable            enable
 Secondary VLAN Tagging                     off               off
 Secondary Sat                              off               off
 Secondary WAN IP Address                   172.32.1.132      172.32.1.132
 Secondary WAN IP Mask                      255.255.255.224   255.255.255.224
 Secondary WAN Gateway                      172.32.1.158      172.32.1.158
 Please hit any key to display next page or 'n' to abort
 Secondary WAN VLAN ID                      3011              3011
 Secondary IP Tunnel                        enable            enable
 Secondary IP Tunnel Local Address          172.32.1.132      172.32.1.132
 Secondary IP Tunnel Remote Address         172.32.1.161      172.32.1.161
 Secondary IP Tunnel Fragmentation Size     358 (auto)        auto
 Primary PVC BTS IP Address                 172.24.16.18      172.24.16.18
 Primary PVC CR IP Address                  172.24.16.17      172.24.16.17
 Primary PVC IP Mask                        255.255.255.252   255.255.255.252
 Secondary PVC BTS IP Address               172.24.20.18      172.24.20.18
 Secondary PVC CR IP Address                172.24.20.17      172.24.20.17
 Secondary PVC IP Mask                      255.255.255.252   255.255.255.252
```

```
BFD Tx Interval                          300               300
BFD Tx Detect Multiplier                 3                 3
BFD Protocol Status Flag                 on                on
Green Traffic Color Map                  7,6,5,4,3,2,1,0   7,6,5,4,3,2,1,0
Yellow Traffic Color Map                 null              null
QOS CIR [kbit]                           512               512
QOS CBS [bytes]                          400               400
QOS EIR [kbit]                           0                 0
QOS EBS [bytes]                          0                 0
QOS Coupling Flag                        off               off
Throttling algorithm                     enable            enable
Please hit any key to display next page or 'n' to abort
Primary PVC PerfMon Jitter Threshold     0                 0
Primary PVC PerfMon Delay Threshold      0                 0
Secondary PVC PerfMon Jitter Threshold   0                 0
Secondary PVC PerfMon Delay Threshold    0                 0

General parameters                       Current
-------------------------------------------------------------------------
Runtime throttling bypass                off
Primary eth sitelink port (pos ID)       L11_A: UP
Primary intermediary port states         L2_B: UP, L3_B: UP
Secondary eth sitelink port (pos ID)     L11_B: UP
Secondary intermediary port states       N/A
```

At the end of its output, the `status bsl` command displays information about site link ports, Ethernet connection state (UP/DOWN), and position (TSC id A or B). The example above is from dual MTS4 configuration.

By L11 here the L1 port (pairs 1-2, 3-6) on the cover is meant.

The `status bsl` command displays two sets of settings for each parameter:

- **Current:** contains settings that were read from the configuration file during startup and are currently used by Base Station.
- **Next:** contains settings that can take effect after a reset of Base Station.

When the **Next** values are successfully validated and saved into the configuration file, they shall take effect after a reset of Base Station.

The `status bfd` command displays states of BFD protocol sessions SC uses to monitor links with Core Routers. BFD protocol must be enabled in Ethernet Site link configuration for this functionality.

```
SC: status bfd
    > Session:1 (172.24.16.18->172.24.16.17) UP
     ------------- RX ---------- TX -------------
        ctrl       1639560       1639729
        reply       817738        821821
        ----------------------------------------
        dropped          1
        up/down          3             2
        ----------- session details -------------
        KA timer 300(peer 300000) timeout 900
        ID 1(peer 4)

    > Session:2 (172.24.20.18->172.24.20.17) UP
     ------------- RX ---------- TX -------------
        ctrl       1640162       1640396
        reply       817672        822490
        ----------------------------------------
        dropped          0
        up/down          1             0
        ----------- session details -------------
```

```
        KA timer 300(peer 300000) timeout 900
        ID 2(peer 9)
```

If there is a performance issue with the Ethernet Site link, the “dropped” or “up/down” numbers are high, and there is a big difference between RX and TX values. See the following example of UP and DOWN Ethernet Site link sessions:

```
> Session:1 (172.24.16.6->172.24.16.5) UP
  ------------ RX ---------- TX -------------
     ctrl       6961306       6961326
     reply      3469091       3492215
     ----------------------------------------
     dropped          0
     up/down          2             1
     ----------- session details -------------
     KA timer 300(peer 300000) timeout 3000
     ID 1(peer 1)

> Session:2 (172.24.20.6->172.24.20.5) DOWN
  ------------ RX ---------- TX -------------
     ctrl             0       3469110
     reply            0             0
     ----------------------------------------
     dropped          0
     up/down          0             0
     ----------- session details -------------
     KA timer 300(peer 0) timeout 3000
     ID 2(peer 0)
```

NOTICE: Bidirectional Forwarding Detection (BFD) is a network protocol implemented on Base Stations and Core/Exit Routers used for Ethernet links to detect failure of any active component. BFD uses "keep-alive" packets and runs inside the IP tunnel established between a particular site and the pairs of Core Routers.

13.1.3.3.8.1
Encrypted Ethernet Site Links

NOTICE: This content is applicable to 8.1 System Release and onward.

Link encryption is an extension to the Ethernet Site Links (ESL) feature. When link encryption is implemented, a router/firewall and an MTS authenticate each other through a PreShared Key (PSK) that is loaded on both the router/firewall and the MTS.

The PSK consists of a key phrase (text characters) or a series of hexadecimal characters. The key authenticates the routers/gateways/firewalls/MTSs to enable a secure Internet Key Exchange (IKE) session. The devices communicate in encrypted state across the WAN link. Therefore, to establish a secure session, each peer router/gateway/firewall/MTS requires the same key. Each link can have a separate PSK or PSKs can be shared, depending on the security policies of your organization. PSKs cannot be only shared on encrypted Base Station links. If PSKs are not shared, a PSK is loaded on to the router/gateway/firewall/MTS for each link. The number of PSKs needed on an MTS depends on the number of links connected to that MTS.

Internet Key Exchange (IKE) generates keys that are used to encrypt, decrypt, and authenticate packets. The keys used by IPsec tunnel connection are regenerated by IKE every 1 hour by default. The keys used by IKE session to negotiate IPsec protocol keys are regenerated by IKE every 6 hours by default. The PreShared Key (PSK) is used to authenticate the MTSs during the IKE session establishing phase and are not used to encrypt, decrypt, or authenticate packets.

The following configuration parameters are specific to the Base Station Encrypted Ethernet site links:

- Encryption Enabled

- Encryption Algorithm
- Authentication Algorithm
- Authentication Method
- IKE SA Lifetime (hours)
- IPSEC SA Lifetime (hours)
- Encryption of performance monitoring packets

NOTICE:
For description of parameters listed above and instruction on how to configure them, see the *TETRA BTS Service Software (TESS) User Guide*.

Use the BTS Service Software tool for configuration of the Encrypted Ethernet site link, especially during upgrade or migration procedures.

The algorithms used for encryption are:

- AES 128
- AES 192
- AES 256

The algorithms used for authentication are:

- SHA-1
- SHA-256
- SHA-384
- SHA-512

To verify if the link encryption option is enabled or disabled in the system, use the `ipsec config` command. The command displays both, the Main system and the Local system site link encryption configuration.

```
SC: ipsec config
---------------------------------------------
 MSO: main
   encrypted sitelinks: enabled
   encryption algorithm: AES256
   authentication algorithm: sha1
   authentication method: pre-shared key
   IKE SA lifetime: 6h
   IPsec SA lifetime: 1h
   pm sessions encryption: disabled
---------------------------------------------

--------------------------------------------
 MSO: local
   encrypted sitelinks: disabled
   encryption algorithm: AES256
   authentication algorithm: sha1
   authentication method: pre-shared key
   IKE SA lifetime: 6h
   IPsec SA lifetime: 1h
   pm sessions encryption: disabled
---------------------------------------------
SC:
```

To display statistics, execute the `ipsec stats show` command on the Site Controller MMI.

For more details on the Encryption configuration, see the “Link Encryption Configuration” chapter in the *Link Encryption* manual.

13.1.3.3.8.2
Verifying Encryption Capability

When and where to use:
Verify that the MTS software is encryption-capable.

NOTICE: This content is applicable to 8.1 System Release and onward.

Procedure:

1. At the MMI command prompt, type `ver` and find the build number which follows the pattern `MTS_TSC_APP-R`***<X>***.

   Where ***<X>*** is a digit.

2. Check if the third digit in the software build number is equal to 4.

   Step example: The third digit in build `MTS_TSC_APP-R08.41.06` is equal to 4, thus the MTS software supports encryption. In contrast, in the build `MTS_TSC_APP-R08.11.06` the third digit is not equal to 4, thus the MTS software does not support encryption.

13.1.4
Verifying Permanent Lock

Verify if the site is permanently locked before antenna maintenance work. Permanent lock is maintained after resets and power cycles.

Prerequisites: You must be remotely logged on to the MTS.

Procedure:

1. In the Site Controller application, enter `status sc`.

   The output containing the information: `Internal State: AS_L_E_IDL (Permanently Locked)` appears.

2. Enter `status br`.

   A list of BR statuses appears:

```
==========================  BR Status Information
===========================

Cab     TX      1PPS     Ref.Sign  TX         RX         Current        IP
& Pos   Keyed   Status    Status   Freq       Freq       Mode
Address
-----  -----  ------  --------  --------  --------  -------------
-----------
01 01    N       OK        OK     000.0000  000.0000       N/A
10.0.253.11
01 02    N       OK        OK     000.0000  000.0000       N/A
10.0.253.12
```

3. Verify that the BRs' TX Freq and RX Freq equals 000.0000.

If any of the system outputs deviate from the description, the site is not permanently locked. For details, see “Lock” in the *MTS Man Machine Interface Commands* manual.

13.1.5
Unlocking the Site from the Permanent Lock State

Follow this procedure to turn off the permanent lock after antenna maintenance work is completed. Permanent lock is maintained after resets and power cycles.

Prerequisites: You must be remotely logged on to the MTS.

Procedure:

1. Verify that antenna maintenance work is completed.
2. Ensure that no maintenance works are currently performed.
3. To unlock the site:
   a. Enter: `unlock -p`
   b. If it is safe to unlock the site, when prompted for confirmation, enter: `Y`

The site is unlocked.

13.1.6
Other Site Controller Symptoms

Table 109: Other Site Controller Symptoms

Symptom	Possible Failure	Corrective Action
Initial power up self test fails	Site Controller	Replace Site Controller.
Service terminal unable to communicate with Controller	Incorrect cable Incorrect setup parameters	Verify cable. Check terminal configuration.
Controller cannot communicate over Ethernet	Cabling problem Site Controller	Check Ethernet cable and 50-Ohm terminator on Ethernet termination. Replace Site Controller.
Site Controller functions normally at first then fails after a period of time	Controller overheating	Replace if required.

13.2
Base Radio / RFDS / Miscellaneous Troubleshooting

The built-in system troubleshooting intelligence is mainly accessed through the Site Controller and Base Radio Controller(s) LED, Man-Machine Interface (MMI) status and fault indications.

13.2.1
Base Radio Troubleshooting

This section serves as a guide to isolate Base Radio failures to the module level. It contains procedures for:

- Troubleshooting
- Verification/Station Operation

13.2.1.1
Base Radio Alarms

The following table displays the generic base radio alarms that can be listed using MMI command `get alarms`.

Table 110: Generic Base Radio Alarms

Alarm ID	Description	Recovery Action	Clear Action	Notes
• ALM_BRC_NVM_CKSUM_FAULT • ALM_BRC_NVM_CKSUM_FAIL	Checksum fault for the XCVR NVM parameters was detected during initialization - some of the XCVR configuration parameters may be corrupted.	Software attempts to set the parameters to the default values taken from the default region in the NVM memory.	If the operation of restoring defaults is successful the alarm is cleared. Otherwise the alarm status is unchanged.	Corrupted configuration parameters may cause that BRC works incorrectly. The default values may be different than the lost parameter values. To ensure that the parameters can be restored manually to the earlier backed up values.
• ALM_BRC_16_8MHZ_FAIL_ALM • ALM_BRC_16_8MHZ_FAIL	The 16.8MHz reference failure - this alarm originates from the VCXO and it is reported by the interrupt (Host IRQ4).	BRC is dekeyed by the software.	The alarm is cleared only after resetting BRC.	The alarm may be reported because of the BRC hardware failure.
ALM_RX_LO1_LOCK	Receiver synthesizer lock detect failure.	Receiver is disabled by the software - BRC is unable to receive.	If the alarm condition disappears then Receiver is re-enabled by the software.	The alarm may be reported because of the BRC hardware failure or because RX VCO is not properly tuned (BCD NVM parameters configuration).
ALM_RX_SYNTH_LD_FAIL	Reported when ALM_RX_LO1_LOCK is set and ALM_BRC_16_8MHZ_FAIL_ALM is cleared			

Alarm ID	Description	Recovery Action	Clear Action	Notes
• ALM_RX_LO1_SL • ALM_RX_SYNTH_SL_FAIL	Receiver synthesizer steering line failure.	Receiver is disabled by the software - BRC is unable to receive.	If the alarm condition disappears then Receiver is re-enabled by the software.	The alarm may be reported because of the BRC hardware failure or because RX VCO is not properly tuned (BCD NVM parameters configuration).
• ALM_RX_VCO_MON_FAULT • ALM_RX_VCO_MON_FAIL	Receiver VCO monitoring failure.	Receiver is disabled by the software - BRC is unable to receive.	If the alarm condition disappears then Receiver is re-enabled by the software.	**Alarm for BR-Arch-1 only.** The alarm may be reported because of the BRC hardware failure or configuration problems.
ALM_BRC_VCXO_UNLOCK_ALM	VCXO is unlocked - the alarm is reported as a fault indication message from DSP.	No recovery action taken by the software.	The alarm is cleared after de-keying BRC.	The alarm means that the BRC reference is not locked to an external reference and VCXO frequency tolerance can vary between 0.025 and 1.5ppm. The alarm may be reported because of the external reference failure or BRC hardware failure.
ALM_BRC_REPLACE_VCXO_ALM	VCXO should be replaced - the alarm is reported as a fault indication message from DSP.	No recovery action taken by the software.	The alarm is cleared after de-keying BRC.	This is an indication the reference clock may go out of lock in the future.
• ALM_RX_ABACUS_CLK_SL • ALM_RX_ABACUS_CLK_SL_FAIL	Receiver main Abacus clock failure.	Receiver is disabled by the software - BRC is un-	If the alarm condition disappears then Receiv-	The alarm may be reported because of the BRC hardware

Alarm ID	Description	Recovery Action	Clear Action	Notes
		able to receive.	er is re-enabled by the software.	failure or configuration problems.
ALM_RX_ABACUS_LO2_SL	Receiver main Abacus 2nd LO failure.	Receiver is disabled by the software - BRC is unable to receive.	If the alarm condition disappears then Receiver is re-enabled by the software.	The alarm may be reported because of the BRC hardware failure or configuration problems.
ALM_RX_ABACUS_2LO_SL_FAIL	Reported when ALM_RX_ABACUS_LO2_SL is set and ALM_RX_5_VOLT is cleared			
• ALM_BRC_ABACUS_CLK1_ALM • ALM_BRC_ABACUS_CLK1_FAIL	Abacus clock 1 is not present - the alarm is reported as a fault indication message from DSP.	BRC is de-keyed by the software.	The alarm is cleared just after BRC is de-keyed.	The alarm may be reported because of the BRC hardware failure.
• ALM_BRC_ABACUS_CLK2_ALM • ALM_BRC_ABACUS_CLK2_FAIL	Abacus clock 2 is not present - the alarm is reported as a fault indication message from DSP.	BRC is de-keyed by the software.	The alarm is cleared just after BRC is de-keyed.	The alarm may be reported because of the BRC hardware failure.
• ALM_BRC_ABACUS_CLK3_ALM • ALM_BRC_ABACUS_CLK3_FAIL	Abacus clock 3 is not present - the alarm is reported as a fault indication message from DSP.	BRC is de-keyed by the software.	The alarm is cleared just after BRC is de-keyed.	The alarm may be reported because of the BRC hardware failure.
• ALM_BRC_ABACUS_FS1_ALM • ALM_BRC_ABACUS_FS1_FAIL	Abacus frame sync 1 is not present - the alarm is reported as a fault indication message from DSP.	BRC is de-keyed by the software.	The alarm is cleared just after BRC is de-keyed.	The alarm may be reported because of the BRC hardware failure.

Alarm ID	Description	Recovery Action	Clear Action	Notes
• ALM_BRC_ABACUS_FS2_ALM • ALM_BRC_ABACUS_FS2_FAIL	Abacus frame sync 2 is not present - the alarm is reported as a fault indication message from DSP.	BRC is de-keyed by the software.	The alarm is cleared just after BRC is de-keyed.	The alarm may be reported because of the BRC hardware failure.
• ALM_BRC_ABACUS_FS3_ALM • ALM_BRC_ABACUS_FS3_FAIL	Abacus frame sync 3 is not present - the alarm is reported as a fault indication message from DSP.	BRC is de-keyed by the software.	The alarm is cleared just after BRC is de-keyed.	The alarm may be reported because of the BRC hardware failure.
• ALM_RX_3_3_VOLT_FAULT • ALM_RX_DC_3_3V_FAIL	Receiver DC 3.3V line failure.	Receiver is disabled by the software - BRC is unable to receive.	If the alarm condition disappears then Receiver is re-enabled by the software.	The alarm may be reported because of some power supply problems (cables, connectors) or the BRC hardware failure / configuration problem.
• ALM_RX_5_VOLT • ALM_RX_DC_5V_FAIL	Receiver DC 5V line failure.	Receiver is disabled by the software - BRC is unable to receive.	If the alarm condition disappears then Receiver is re-enabled by the software.	The alarm may be reported because of some power supply problems (cables, connectors) or the BRC hardware failure / configuration problem.
• ALM_RX_12_VOLT • ALM_RX_DC_12V_FAIL	Receiver DC 12V line failure.	Receiver is disabled by the software - BRC is unable to receive.	If the alarm condition disappears then Receiver is re-enabled by the software.	The alarm may be reported because of some power supply problems (cables, connectors) or the BRC hardware failure / configuration problem.

Alarm ID	Description	Recovery Action	Clear Action	Notes
• ALM_RX_27_VOLT_FAULT • ALM_RX_DC_27V_FAIL	Receiver DC 27V line failure.	Receiver is disabled by the software - BRC is unable to receive.	If the alarm condition disappears then Receiver is re-enabled by the software.	**Alarms for BR-Arch-1 only.** The alarm may be reported because of some power supply problems (cables, connectors) or the BRC hardware failure / configuration problem.
ALM_RX_DC_1_8V_FAIL	Receiver DC 1.8V line failure.	Receiver is disabled by the software - BRC is unable to receive.	If the alarm condition disappears then Receiver is re-enabled by the software.	**Alarm for BR-Arch-2 only.** The alarm may be reported because of some power supply problems (cables, connectors) or the BRC hardware failure / configuration problem.
ALM_RX_DC_2_775V_FAIL	Receiver DC 2.775V line failure.	Receiver is disabled by the software - BRC is unable to receive.	If the alarm condition disappears then Receiver is re-enabled by the software.	**Alarm for BR-Arch-2 only.** The alarm may be reported because of some power supply problems (cables, connectors) or the BRC hardware failure / configuration problem.
• ALM_RX_NVM_CKSUM_FAULT • ALM_RX_NVM_CKSUM_FAIL	Checksum fault for the Receiver NVM parameters was detected during initialization - some of the Receiver configuration parameters may be corrupted.	Software attempts to set the parameters to the default values taken from the default region in the NVM memory.	If the operation of restoring defaults is successful the alarm is cleared. Otherwise the alarm status is unchanged.	Corrupted configuration parameters may cause that BRC works incorrectly. The default values may be different than the lost parameter values. To ensure that the parameters can be restored manually to the earli-

Alarm ID	Description	Recovery Action	Clear Action	Notes
				er backed up values.
ALM_RX_FRU_BAND_MISMATCH	Band mismatch between BRC receivers was detected during initialization. Since BRC has only one receiver this alarm should be never observed.	No recovery action taken by the software.	The alarm is cleared only after resetting BRC.	If the alarm is reported it means some software error.
• ALM_AMBIENT_TEMP_ALM_WARN • ALM_AMBIENT_TEMP_WARN	The ambient temperature is above the ambient temperature threshold for the low output power.	No recovery action taken by the software.	If the alarm condition disappears then the alarm is cleared.	
• ALM_AMBIENT_TEMP_ALM_FAULT • ALM_AMBIENT_TEMP_FAULT	The ambient temperature is greater than the allowable high temperature threshold or lower than the allowable low temperature threshold.	BRC is dekeyed by the software if the ambient temperature is greater than the allowable high temperature threshold.	If the alarm condition disappears the alarm is cleared and BRC can be re-keyed again.	
ALM_TX_LO_LOCK	Exciter synthesizer lock detect failure.	BRC is dekeyed by the software.	If the alarm condition disappears the alarm is cleared and BRC can be re-keyed again.	The alarm may be reported because of the BRC hardware failure or because TX VCO is not properly tuned (BCD NVM parame-

Alarm ID	Description	Recovery Action	Clear Action	Notes
				ters configuration).
ALM_TX_PLL_LOCK_DETECT_FAIL	Reported when ALM_TX_LO_LOCK is set and ALM_BRC_16_8MHZ_FAIL_ALM is cleared			
• ALM_TX_LO_SL • ALM_TX_PLL_SL_FAIL	Exciter synthesizer steering line failure.	BRC is de-keyed by the software.	If the alarm condition disappears the alarm is cleared and BRC can be re-keyed again.	The alarm may be reported because of the BRC hardware failure or because TX VCO is not properly tuned (BCD NVM parameters configuration).
ALM_TX_TEMP_INTERNAL_FAIL	Exciter temperature is too high.	BRC is de-keyed by the software.	If the alarm condition disappears the alarm is cleared and BRC can be re-keyed again.	
• ALM_TX_VCO_MON_FAIL • ALM_TX_VCO_MONITOR_FAIL	Exciter VCO monitoring failure.	BRC is de-keyed by the software.	If the alarm condition disappears the alarm is cleared and BRC can be re-keyed again.	
ALM_TX_TRAINING_FAIL	It was detected that the software did not schedule the DSP training when it was necessary.	BRC is de-keyed by the software.	The alarm is cleared just after BRC is de-keyed.	If the alarm is reported it means some software error.
ALM_TX_FRU_BAND_MISMATCH	Band configuration mismatch between Exciter and Power Amplifier was detected during initialization.	No recovery action taken by the software.	The alarm is cleared only after resetting BRC.	If the alarm is reported it means that Exciter and Power Amplifier may be incompatible. The initialization fails - BRC cannot be keyed.

Alarm ID	Description	Recovery Action	Clear Action	Notes
• ALM_EX_NVM_CKSUM_FAULT • ALM_EX_NVM_CKSUM_FAIL	Checksum fault for the Exciter NVM parameters was detected during initialization - some of the Exciter configuration parameters may be corrupted.	Software attempts to set the parameters to the default values taken from the default region in the NVM memory.	If the operation of restoring defaults is successful the alarm is cleared. Otherwise the alarm status is unchanged.	Corrupted configuration parameters may cause that BRC works incorrectly. The default values may be different than the lost parameter values. To ensure that the parameters can be restored manually to the earlier backed up values.
• ALM_TX_CLIP_DETECT_ALM_FAULT • LM_TX_CLIP_DETECT_FAULT	Reported when Javelin clip detected failure condition still exists after 1 minute.	BRC is dekeyed by the software.	BRC is rekeyed by the software. If the alarm condition disappears after key-up then the alarm is cleared. If the alarm is reported for the third time it cannot be cleared until next BRC reset.	The alarm may be reported because of the BRC hardware failure or configuration problems.
• ALM_TX_CLIP_DETECT_ALM_WARN • ALM_TX_CLIP_DETECT_WARN	Exciter Javelin clip detected.	The output power is reduced by the software.	If the alarm condition disappears then the output power is restored by the software to the target level. If the alarm is reported for the third time it cannot be cleared until next reset.	The alarm may be reported because of the BRC hardware failure or configuration problems.
ALM_TX_TEMP_INTERNAL_WARN	Internal Power Amplifier tem-	The output power is re-	If the alarm condition disappears	

Alarm ID	Description	Recovery Action	Clear Action	Notes
	perature is too high.	duced by the software.	then the output power is restored by the software to the target level.	
• ALM_TX_TEMP_INTERNAL_FAULT • ALM_PA_TEMP_INTERNAL_WARN • ALM_PA_TEMP_INTERNAL_FAULT	Internal Power Amplifier temperature is too high.	BRC is dekeyed by the software.	If the alarm condition disappears the alarm is cleared and BRC can be re-keyed again.	
• ALM_TX_TEMP_INTERNAL_SEVERE • ALM_PA_TEMP_INTERNAL_SEVERE	Internal Power Amplifier temperature is too high.	BRC is dekeyed by the software.	If the alarm condition disappears the alarm is cleared and BRC can be re-keyed again.	
• ALM_TX_DC_PS • ALM_PA_IN_RUSH_FAIL	Power Amplifier DC supply failure.	BRC is dekeyed by the software.	If the alarm condition disappears the alarm is cleared and BRC can be re-keyed again.	The alarm may be reported because of some power supply problems (cables, connectors) or the BRC hardware failure / configuration problem.
ALM_TX_3_3V_PS	Power Amplifier 3.3V DC supply failure.	BRC is dekeyed by the software.	If the alarm condition disappears the alarm is cleared and BRC can be re-keyed again.	The alarm may be reported because of some power supply problems (cables, connectors) or the BRC hardware failure / configuration problem.
ALM_PA_3_3V_SUPPLY_FAIL	Reported when ALM_TX_3_3V_PS is set and ALM_TX_DC_PS is cleared			
ALM_TX_5V_PS	Power Amplifier 5V DC supply failure.	BRC is dekeyed by the software.	If the alarm condition disappears the alarm is cleared and BRC can be	The alarm may be reported because of some power supply problems (cables, connec-

Alarm ID	Description	Recovery Action	Clear Action	Notes
			re-keyed again.	tors) or the BRC hardware failure / configuration problem.
ALM_PA_5V_SUPPLY_FAIL	Reported when ALM_TX_5V_PS is set and ALM_TX_DC_PS is cleared			
ALM_TX_LVL_PWR_FAIL	The power leveling procedure failed to establish the output power at the requested level.	BRC is de-keyed by the software.	The alarm is cleared just after BRC is de-keyed.	The power leveling is done periodically to ensure that the output power does not deviate from the required level. It is also done each time when the target output power is changed by recovery or clear actions of some alarms.
• ALM_PA_NVM_CKSUM_FAULT • ALM_PA_NVM_CKSUM_FAIL	Checksum fault for the Power Amplifier NVM parameters was detected during initialization - some of the Power Amplifier configuration parameters may be corrupted.	Software attempts to set the parameters to the default values taken from the default region in the NVM memory.	If the operation of restoring defaults is successful the alarm is cleared. Otherwise the alarm status is unchanged.	Corrupted configuration parameters may cause that BRC works incorrectly. The default values may be different than the lost parameter values. To ensure that the parameters can be restored manually to the earlier backed up values.
• ALM_TX_DE-KEYED_FWD_PWR_HIGH • ALM_PA_DE-KEYED_POWER_PRESENT	Reported if Transmitter is dekeyed and the forward power meter still measures some output power that exceeds the configured	BRC is de-keyed again by the software.		The alarm may be reported because of some software error or the BRC hardware failure.

Alarm ID	Description	Recovery Action	Clear Action	Notes
	acceptable level.			
• ALM_RX_DC_INJ1_FAULT • ALM_RX_DC_INJ1_FAIL	Receiver branch1 LNA DC injection failure.	Branch1 of Receiver is disabled by the software - if no more enabled branches then BRC is unable to receive, otherwise BRC is still able to receive but the coverage can be lower	If the alarm condition disappears then branch1 of Receiver is re-enabled by the software.	The alarm may be reported because of the BRC hardware failure or configuration problems.
• ALM_RX_DC_INJ2_FAULT • ALM_RX_DC_INJ2_FAIL	Receiver branch2 LNA DC injection failure.	Branch2 of Receiver is disabled by the software - if no more enabled branches then BRC is unable to receive, otherwise BRC is still able to receive but the coverage can be lower	If the alarm condition disappears then branch2 of Receiver is re-enabled by the software.	The alarm may be reported because of the BRC hardware failure or configuration problems.
• ALM_RX_DC_INJ3_FAULT • ALM_RX_DC_INJ3_FAIL	Receiver branch3 LNA DC injection failure.	Branch3 of Receiver is disabled by the software - if no more enabled branches then BRC is unable to receive, otherwise BRC is still able to receive but the coverage can be lower	If the alarm condition disappears then branch3 of Receiver is re-enabled by the software.	The alarm may be reported because of the BRC hardware failure or configuration problems.

Alarm ID	Description	Recovery Action	Clear Action	Notes
ALM_RX_DC_INJ_FAIL	Reported when ALM_RX_DC_INJx_FAULT alarms for all Receiver branches are set			
• ALM_RX_DC_INJ1_SHORT_FAULT • ALM_RX_DC_INJ1_SHORT_FAIL	Receiver branch1 LNA DC injection failure.	Branch1 of Receiver is disabled by the software - if no more enabled branches then BRC is unable to receive, otherwise BRC is still able to receive but the coverage can be lower	If the alarm condition disappears then branch1 of Receiver is re-enabled by the software.	The alarm may be reported because of the BRC hardware failure.
• ALM_RX_DC_INJ2_SHORT_FAULT • ALM_RX_DC_INJ2_SHORT_FAIL	Receiver branch2 LNA DC injection failure.	Branch2 of Receiver is disabled by the software - if no more enabled branches then BRC is unable to receive, otherwise BRC is still able to receive but the coverage can be lower	If the alarm condition disappears then branch2 of Receiver is re-enabled by the software.	The alarm may be reported because of the BRC hardware failure.
• ALM_RX_DC_INJ3_SHORT_FAULT • ALM_RX_DC_INJ3_SHORT_FAIL	Receiver branch3 LNA DC injection failure.	Branch3 of Receiver is disabled by the software - if no more enabled branches then BRC is unable to receive, otherwise BRC is still able to receive but the coverage can be lower	If the alarm condition disappears then branch3 of Receiver is re-enabled by the software.	The alarm may be reported because of the BRC hardware failure.

Alarm ID	Description	Recovery Action	Clear Action	Notes
ALM_RX_DC_INJ_SHORT_FAIL	Reported when ALM_RX_DC_INJx_SHORT_FAIL alarms for all Receiver branches are set			
ALM_RX_INJ1_SHORT_LONG_FAULT	Reported when ALM_RX_DC_INJ1_SHORT_FAIL is set for longer time than 5 minutes	Branch1 of Receiver is finally disabled (by setting DC supply control line for the LNA)	There is no automatic recovery from this alarm.	The alarm may be reported because of the BRC hardware failure.
ALM_RX_INJ2_SHORT_LONG_FAULT	Reported when ALM_RX_DC_INJ2_SHORT_FAIL is set for longer time than 5 minutes	Branch2 of Receiver is finally disabled (by setting DC supply control line for the LNA)	There is no automatic recovery from this alarm.	The alarm may be reported because of the BRC hardware failure.
ALM_RX_INJ3_SHORT_LONG_FAULT	Reported when ALM_RX_DC_INJ3_SHORT_FAIL is set for longer time than 5 minutes	Branch3 of Receiver is finally disabled (by setting DC supply control line for the LNA)	There is no automatic recovery from this alarm.	The alarm may be reported because of the BRC hardware failure.
ALM_RX_INJ_SHORT_LONG_FAIL	Reported when ALM_RX_INJx_SHORT_LONG_FAULT alarms for all Receiver branches are set			
ALM_PLAT_PEER_HW	FPGA failure detected by DSP - the alarm is reported as a fault indication message from DSP.	BRC is de-keyed by the software.	The alarm is cleared just after BRC is de-keyed.	The alarm may be reported because of the BRC hardware failure.
ALM_PLAT_PEER_FATAL	Memory / Illegal instruction / Watchdog failure detected by DSP - the alarm is reported as a fault indica-	BRC is de-keyed by the software.	The alarm is cleared just after BRC is de-keyed.	The alarm may be reported because of some software error or the BRC hardware failure.

Alarm ID	Description	Recovery Action	Clear Action	Notes
	tion message from DSP.			
ALM_PLAT_PEER_TIMING	Timing / clock fault detected by DSP - the alarm is reported as a fault indication message from DSP.	No recovery action taken by the software.	The alarm is cleared after de-keying BRC.	The alarm may be reported because of the BRC hardware failure.
ALM_PLAT_NO_EXP_CB	No CoreLib exception callback set in BRC Application - internal software error	No recovery action taken by the software.	The alarm is cleared only after resetting BRC.	Software error
ALM_PLAT_NO_GEN_CB	No CoreLib command complete callback set in BRC Application - internal software error	No recovery action taken by the software.	The alarm is cleared only after resetting BRC.	Software error
ALM_PLAT_NO_EVT_CB	No CoreLib event callback set in BRC Application - internal software error	No recovery action taken by the software.	The alarm is cleared only after resetting BRC.	Software error
ALM_PLAT_NO_RF_CB	No CoreLib DSP receive / transmit data callback set in BRC Application - internal software error	No recovery action taken by the software.	The alarm is cleared only after resetting BRC.	Software error
ALM_TX_FINAL_FAILURE_FLT	Power Amplifier final failure.	BRC is de-keyed by the software.	If the alarm condition disappears	The alarm may be reported because of the

Alarm ID	Description	Recovery Action	Clear Action	Notes
			the alarm is cleared.	BRC hardware failure or configuration problems.
ALM_TX_FINAL_FAILURE	Power Amplifier final failure.	The output power is reduced by the software.	If the alarm condition disappears then the output power is restored by the software to the target level.	The alarm may be reported because of the BRC hardware failure or configuration problems.
• ALM_TX_VSWR_ALARMING • ALM_PA_VSWR_ALARMING	Voltage Wave Standing Ratio is high.	No recovery action taken by the software.		The alarm may be reported because of the BRC hardware failure or configuration problems.
• ALM_TX_REFL_PWR_ALM_FAULT • ALM_PA_REFL_PWR_FAULT	Reflected power is high.	BRC is de-keyed by the software.	BRC stays de-keyed until reset occurs.	The alarm may be reported because of the BRC hardware failure or configuration problems.
• ALM_TX_REFL_PWR_ALM_WARN • ALM_PA_REFL_PWR_WARN	Reflected power is high.	The output power is reduced by the software.	If the alarm condition disappears then the output power is restored by the software to the target level.	The alarm may be reported because of the BRC hardware failure or configuration problems.
ALM_TX_KEYED_FWD_PWR_LOW	The output power dropped below 60% of the current target (programmed) power (the power level that is expected to be currently set).	The power leveling procedure is executed to get the output power to the expected level.	When the output power is restored to the expected level the alarm is cleared	The alarm may be reported because of the BRC hardware failure or configuration problems.
ALM_PA_OTHER_RF_FAIL	The same as ALM_TX_KEYED_FWD_PWR_LOW			

Alarm ID	Description	Recovery Action	Clear Action	Notes
ALM_TX_KEYED_FWD_PWR_HIGH	The output power rose above 140% of the current target (programmed) power (the power level that is expected to be currently set).	The power leveling procedure is executed to get the output power to the expected level.	When the output power is restored to the expected level the alarm is cleared	The alarm may be reported because of the BRC hardware failure or configuration problems.
ALM_BRC_ETH_LAN1_LINK_ALM	Ethernet LAN1 Link is down - the link state change is reported by CPLD by the interrupt (Host IRQ2).	No recovery action taken by the software.	When the link is up then the alarm is cleared.	The link to Site Controller is disconnected or failed.
ALM_BRC_ETH_LAN2_LINK_ALM	Ethernet LAN2 Link is down - the link state change is reported by CPLD by the interrupt (Host IRQ2).	No recovery action taken by the software.	When the link is up then the alarm is cleared.	The link to Site Controller is disconnected or failed.
ALM_BRC_ETH_LAN_LINK_FAIL	Reported when ALM_BRC_ETH_LAN1_LINK_ALM is set and ALM_BRC_ETH_LAN2_LINK_ALM is set	No recovery action taken by the software.	When the link is up then the alarm is cleared.	Both links to Site Controller are disconnected or failed.
ALM_BRC_CP2A_LINK_FAIL_ALM	CP2A Link failure - the link state change is reported by	CPLD will automatically switch to CP2B.	When the link is up then the alarm is cleared.	The link to Site Controller is disconnected or failed.

Alarm ID	Description	Recovery Action	Clear Action	Notes
	CPLD by the interrupt (Host IRQ2).			
ALM_BRC_CP2B_LINK_FAIL_ALM	CP2B Link failure - the link state change is reported by CPLD by the interrupt (Host IRQ2).	CPLD will automatically switch to CP2A.	When the link is up then the alarm is cleared.	The link to Site Controller is disconnected or failed.
ALM_BRC_CP2A_REF_ALM	CP2A reference is not present - the alarm originates from the STIC FPGA (which is read by DSP) and it is reported as a fault indication message from DSP	Hardware automatically selects another reference which is present.	The alarm is cleared after de-keying BRC.	The alarm may be reported because of the external reference failure or BRC hardware failure.
ALM_BRC_CP2B_REF_ALM	CP2B reference is not present - the alarm originates from the STIC FPGA (which is read by DSP) and it is reported as a fault indication message from DSP	Hardware automatically selects another reference which is present.	The alarm is cleared after de-keying BRC.	The alarm may be reported because of the external reference failure or BRC hardware failure.
ALM_DEKEY_FROM_MMI	BRC is de-keyed by using dekey MMI command	BRC is de-keyed by the software.	The alarm is cleared (and BRC is re-keyed again) after using key MMI command.	

Alarm ID	Description	Recovery Action	Clear Action	Notes
ALM_GPS_FAILURE	GPS failure detected - 1PPS signal is lost.	No recovery action taken by the software.	After de-keying BRC and regaining the 1PPS signal the alarm is cleared.	The alarm may be reported because of the 1PPS signal from SC failure or link to SC failure or BRC hardware failure.
ALM_RESET_PENDING_ALARM	CMP Reset request received from Site Controller but delay time for the reset is set.	After the delay time elapses the BRC is reset.	The alarm is cleared only after resetting BRC.	
ALM_HW_INIT_FAILED	Hardware initialization failure.	No recovery action taken by the software.	The alarm is cleared only after resetting BRC.	The alarm may be reported because of BRC hardware configuration error or BRC hardware failure.
ALM_RX1_PATH	RSSI for Receiver path 1 is much lower than maximal RSSI measured for the remaining configured paths.	No recovery action taken by the software.	When the clear condition is met then the alarm is cleared.	Each time when RSSI for path 1 is less than (max_RSSI - mts_receive_path_threshold) then RSSI failure counter for path 1 is incremented by 1. Otherwise the counter is decremented by 2. After checking the alarm condition the counter is set to 0 if it has a negative value. The rssicnt command can be used for checking the threshold that is currently used. The alarm may be reported because of the BRC hardware

Alarm ID	Description	Recovery Action	Clear Action	Notes
				failure or configuration problems.
ALM_RX2_PATH	RSSI for Receiver path 2 is much lower than maximal RSSI measured for the remaining configured paths.	No recovery action taken by the software.	When the clear condition is met then the alarm is cleared.	Each time when RSSI for path 2 is less than (max_RSSI - mts_receive_path_threshold) then RSSI failure counter for path 2 is incremented by 1. Otherwise the counter is decremented by 2. After checking the alarm condition the counter is set to 0 if it has a negative value. The rssicnt command can be used for checking the threshold that is currently used. The alarm may be reported because of the BRC hardware failure or configuration problems.
ALM_RX3_PATH	RSSI for Receiver path 3 is much lower than maximal RSSI measured for the remaining configured paths.	No recovery action taken by the software.	When the clear condition is met then the alarm is cleared.	Each time when RSSI for path 3 is less than (max_RSSI - mts_receive_path_threshold) then RSSI failure counter for path 3 is incremented by 1. Otherwise the counter is decremented by 2. After checking the alarm condition the counter is set to 0 if it

Alarm ID	Description	Recovery Action	Clear Action	Notes
				has a negative value. The rssicnt command can be used for checking the threshold that is currently used. The alarm may be reported because of the BRC hardware failure or configuration problems.
ALM_RF_JAMMING	Uplink channel RF interference detected.	No recovery action taken by the software.	The alarm is cleared if no longer interference is detected.	
ALM_RF_JAMMING_WITH_AIH	Uplink channel RF interference detected with Automatic Interference Handler is enabled.	Information sent to Site Controller. MCCH setup requests are rejected by BRC.	The alarm is cleared if no longer interference is detected.	
ALM_LAPD_LINK	LAPD connection is down.	BRC is dekeyed by the software.	The alarm is cleared after the LAPD connection is restored.	The alarm may be reported because of the link to SC failure.
ALM_RX_IF1_FAULT	Current consumption failure of IF amplifier in branch 1	Receiver Branch 1 is disabled	If condition disappears branch 1 is enabled	The alarm may be reported if current is outside specified limits.
ALM_RX_IF2_FAULT	Current consumption failure of IF amplifier in branch 2	Receiver Branch 2 is disabled	If condition disappears branch 2 is enabled	The alarm may be reported if current is outside specified limits.
ALM_RX_IF3_FAULT	Current consumption failure of IF ampli-	Receiver Branch 3 is disabled	If condition disappears branch 3 is enabled	The alarm may be reported if current is outside specified limits.

Alarm ID	Description	Recovery Action	Clear Action	Notes
	fier in branch 3			
ALM_EX_DC_27V_FAULT	Exciter DC 27V line failure.	Transmitter is disabled by the software - BRC is unable to transmit.	If the alarm condition disappears then transmitter is re-enabled by the software.	The alarm may be reported because of some power supply problems (cables, connectors) or the BRC hardware failure / configuration problem.
ALM_EX_DC_12V_FAULT	Exciter DC 12V line failure.	Transmitter is disabled by the software - BRC is unable to transmit.	If the alarm condition disappears then transmitter is re-enabled by the software.	The alarm may be reported because of some power supply problems (cables, connectors) or the BRC hardware failure / configuration problem.
ALM_EX_DC_5V_FAULT	Exciter DC 5V line failure.	Transmitter is disabled by the software - BRC is unable to transmit.	If the alarm condition disappears then transmitter is re-enabled by the software.	The alarm may be reported because of some power supply problems (cables, connectors) or the BRC hardware failure / configuration problem.
ALM_EX_DC_2_775V_FAULT	Exciter DC 2.775V line failure.	Transmitter is disabled by the software - BRC is unable to transmit.	If the alarm condition disappears then transmitter is re-enabled by the software.	The alarm may be reported because of some power supply problems (cables, connectors) or the BRC hardware failure / configuration problem.
ALM_EX_DC_3_3V_FAULT	Exciter DC 3.3V line failure.	Transmitter is disabled by the software - BRC is unable to transmit.	If the alarm condition disappears then transmitter is re-enabled by the software.	The alarm may be reported because of some power supply problems (cables, connectors) or the BRC hardware fail-

Alarm ID	Description	Recovery Action	Clear Action	Notes
				ure / configuration problem.
ALM_EX_DC_1_875V_FAULT	Exciter DC 1.875V line failure.	Transmitter is disabled by the software - BRC is unable to transmit.	If the alarm condition disappears then transmitter is re-enabled by the software.	The alarm may be reported because of some power supply problems (cables, connectors) or the BRC hardware failure / configuration problem.

13.2.1.2
Recommended Test Equipment

The following table lists the recommended test equipment to perform the Base Radio troubleshooting/ station operation procedures.

Table 111: Recommended Test Equipment

Test Equipment	Model Number	Use
TETRA Signal Generator	Rhode Schwarz: SMU200A + SMU-K68	Used for checking receive and transmit operation.
TETRA Analyzer	FSQ+FS-K110+FSQ-K70	
Dummy Load (50 Ω, 250 W)	Weinschel 453033	Used to terminate output
Service Terminal	VT100 or compatible	Local service terminal
Power Meter	HP 437B	Used to measure reflected and forward power
RF Attenuator, 250 W, 40 dB	Weinschel 404043	Protection for HP89441A
RF Attenuator, 10 dB	minimum 100 W	Protection for HP89441A

13.2.1.3
Troubleshooting Procedures

The Base Radio is computer-controlled and employs digital signal processing techniques. Many of the troubleshooting and station operation procedures require Man-Machine Interface (MMI) commands. These commands are used to communicate station level commands to the Base Radio through the RS-232 communications port located on the front of the BRC.

The field maintenance philosophy for the Base Radio is to repair by replacement. The station is comprised of self-contained Field Replaceable Units (FRU).

A defective FRU is replaced with a non-defective module. This method of troubleshooting limits downtime and quickly restores the Base Radio back to normal operation.

Ship defective modules to a Motorola Solutions repair depot for repair.

This manual provides two troubleshooting procedures for the Base Radio. Each procedure is designed to quickly identify faulty modules.

13.2.1.4
Routine Checkout

Procedure 1 is a quick, non-intrusive test performed during a routine site visit. Use this procedure to verify proper station operation without taking the station out of service. The following figure shows the Procedure 1 Troubleshooting Flowchart.

Figure 192: Procedure 1 Troubleshooting Flowchart

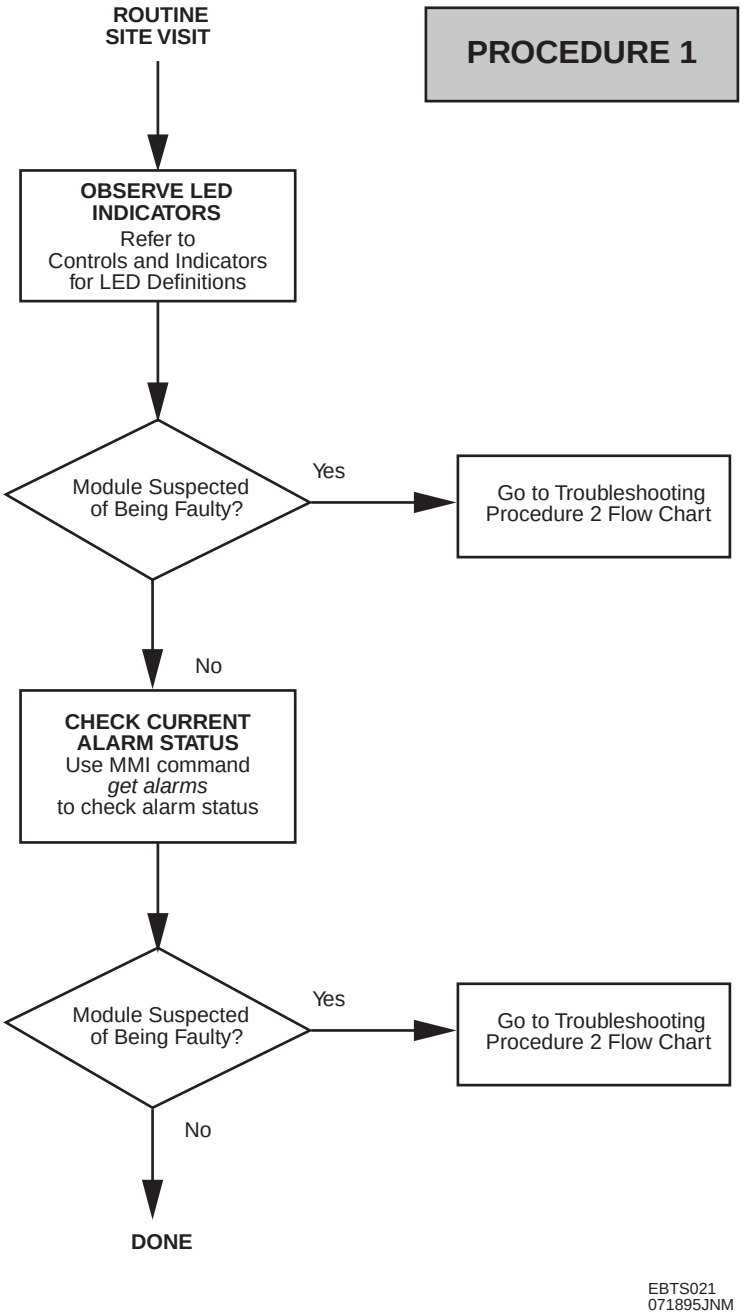

13.2.1.5
Reported/Suspected Problems

Use Procedure 2 to troubleshoot reported or suspected equipment malfunctions. Perform this procedure with equipment in service (non-intrusive) and with equipment taken temporarily out of service (intrusive).

Figure 193: Procedure 2 Troubleshooting Flowchart

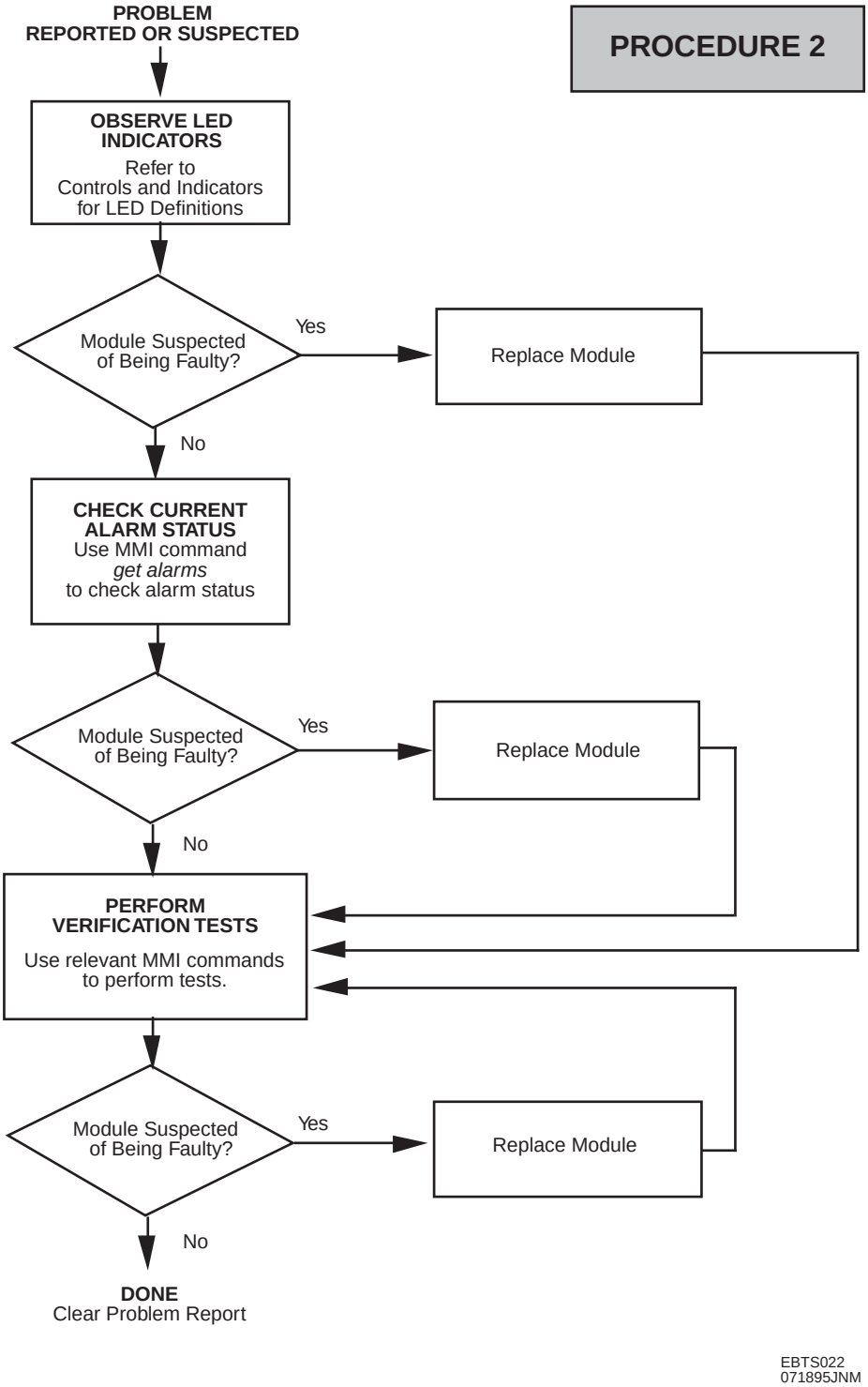

13.2.1.5.1
Base Radio Replacement

Replace suspected modules within the BR with known non-defective module to restore the station to proper operation. For a list of available FRUs, see Field Replaceable Units (FRUs) on page 478.

13.2.2
Base Radio Fault Indications

Figure 194: Base Radio LEDs

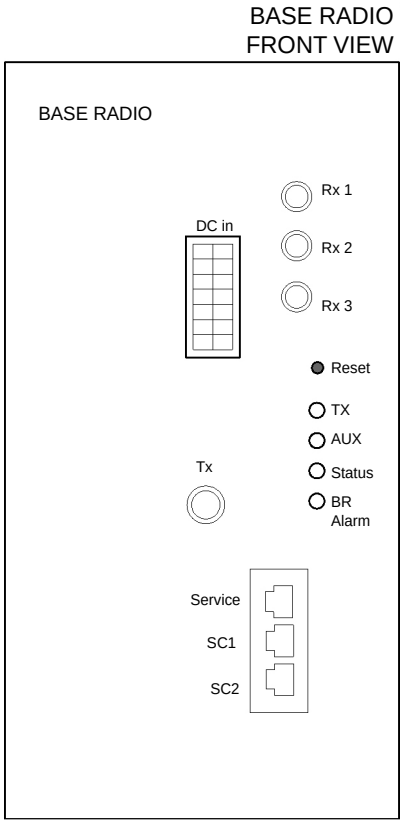

The BRC have 4 LEDs that are under software control: only 3 of these are used (TX, Status, BR Alarm). The LEDs indicate the main operating state of the BRC, as outlined in the table below. Additionally there are two SC1, SC2 LEDs indicating network problems.

Table 112: Base Radio Fault Indications

Indication	Possible Failure	Corrective Action
All LEDs: OFF	Power Supply switch is OFF or power supply is damaged	• Check if power supply switch is ON • Verify power to the BR, cabling • Check LEDs on PSU (power supply) - replace PSU (power supply)
Status LED: Amber, Alarm LED: RED	Waiting for software download, this is where	• Check SC link LEDs

Indication	Possible Failure	Corrective Action
	BRC will wait if no Site Controller present	• Reset the MTS and interrupt the auto-boot process. Log on to the required application: Boot1 on BR-Arch-1, Base Radio Core on BR-Arch-2. Then use the following commands, to check if IP/MAC addresses are valid and are different on each interface (to avoid conflicts): - `spr inet/if/eth0` - `spr inet/if/eth1` • Check also if the IP suffix matches BR Cabinet ID/Position ID combination, for example: 10.0.253.cp where c = 1 (Cabinet ID) and p = 2 (Position ID) give us 10.0.253.12. Use the following command: `cccp` • Reset BR
Status LED: GREEN, Alarm LED: RED	BRC application is running but an alarm is preventing the BR from keying	• Check logs through SC • Verify proper cabinet/position by executing **get cabinet**, **get position** MMI commands • Check BR IP addresses by executing **get ifconfig** MMI command • Check for alarm conditions by executing **get alarms** MMI command or by test application (PA temperature alarm, lock and ref alarms, all receivers failed, PA VSWR, alarm...) • Check the Power Amplifier by executing **get pa_status** MMI command (check parameters: fwd power, frequencies) • Start test application and check for current alarms by executing test application command: **alarms -ofault_hndlr** ; check TX (transmitter) and RX (receiver) frequency by executing **freq -otx_all, freq -orx_all** test application commands • Check reference signal from SC link • Reset BR • Replace BR
SC1, SC2 LED: GREEN OFF	Ethernet link not present	• Check cabling to Site Controller • Check Site Controller status

Indication	Possible Failure	Corrective Action
SC1, SC2 LED: YELLOW OFF	No ethernet activity	• If ethernet link present check proper IP address by executing **get ifconfig** MMI command • Check Site Controller IP address • Check connection to the Site Controller

13.2.3
Miscellaneous Troubleshooting

Table 113: Miscellaneous Troubleshooting Items

Indication	Possible Failure	Corrective Action
No over-the-air communication	Open Ethernet cable, or missing termination of Ethernet cable	Verify no open or damage to Ethernet cable, or missing termination.
	Open or damaged BR antenna, lead in or surge arrestor	Verify no open or damage to BR antenna, lead-in or surge arrestor.
No internal site communication (Ethernet)	Open Ethernet cable, missing termination of Ethernet cable	Verify no open or damage to Ethernet cable, or missing termination.
Transmissions bad or unusable	Open or damaged BR antenna, lead in or surge arrestor	• Verify no open or damage to BR antenna, lead-in or surge arrestor. • Possible intermodulation desensitizing, carrier interference, X.21 or E1 link defect.
Entire site off air after several hours	AC or DC Power failure	Verify AC or DC input voltage on Power Supply Unit.
Bad VSWR reported or TX_REFL_POWER alarm reported (ALM_PA_REFL_PWR _FAULT will be raised)	Open or damaged BR antenna, lead in or surge arrestor	Verify no open or damage to BR antenna, lead-in or surge arrestor.

Chapter 14

Technical Specifications

14.1
Restriction of Hazardous Substances Compliance

This is to declare that MSI products comply with the EU Directive 2011/65/EU (Restriction of Hazardous Substance or RoHS-2) and India RoHS, including applicable exemptions, with respect to the following substances:

- Lead (Pb) < 0.1% by weight (1000 ppm)
- Mercury (Hg) < 0.1% by weight (1000 ppm)
- Cadmium (Cd) < 0.01% by weight (100 ppm)
- Hexavalent Chromium (Cr6+) < 0.1% by weight (1000 ppm)
- Polybrominated Biphenyls (PBB) < 0.1% by weight (1000 ppm)
- Polybrominated Diphenyl Ethers (PBDE) < 0.1% by weight (1000 ppm)

14.2
Environmental and Standards Specifications

This section presents the Environmental Specifications and the Standards Specifications.

14.2.1
Environmental Specifications

Table 114: Environmental Specifications

Environmental Specifications	Description
Operating temperature	• MTS LiTE 400 MHz (without fans) -30 °C to 55 °C • MTS LiTE 400 MHz (with fans) -30 °C to 60 °C • MTS LiTE 800 MHz (always fans) -30 °C to 60 °C • MTS 2 400 MHz (without fans) -30 °C to 55 °C • MTS 2 400 MHz (with fans) -30 °C to 60 °C • MTS 2 260 MHz (without fans) -30 °C to 55 °C • MTS 2 800 MHz (always fans) -30 °C to 60 °C • MTS 2 900 MHz (always fans) -30 °C to 60 °C • MTS 4 400 MHz (with fans) -30 °C to 60 °C • MTS 4 400 MHz (without fans) -30 °C to 55 °C • MTS 4 260 MHz (always fans) -30 °C to 60 °C • MTS 4 800 MHz (with fans) -30 °C to 55 °C
Storage temperature	-40 °C to 85 °C

Environmental Specifications	Description
Humidity	5% to 95% non-condensing for 30 C. EN 300 019 1-3 Class 3.2
Operational altitude	-300 m to 3000 m
Environmental protection	IP 20 according to IEC 60529
Operating in use	Shock: EN300 019-2-3 T 3.2
	Vibration: EN300 019-2-3 T 3.2
Storage and Transportation	• Weather protected, not temperature-controlled storage locations. ETSI EN 300 019-1-1 Class 1.2, and EN 300 019-2-1 T1.2 • ETSI EN 300 019-1-2 Class2.3 public transportation, and EN 300 019-2-2 T2.3.

14.2.2
Standards Specifications

Table 115: MTS Standards Specifications

Standards Specifications	Description
Harmonized EN for TETRA	EN 303 035-1: TErrestial Trunked RAdio TETRA EN 302 561: TErrestial Trunked RAdio (TETRA)
Air-Interface	EN 300 392-2
Conformance Test	EN 300 394-1
EU Directives	R&TTE - Radio and Telecommunications Terminal Equipment Directive 1999/5/EC WEEE - Waste Electrical and Electronic Equipment Directive 2002/96/EC RoHS - Restriction of Hazardous Substances Directive 2002/95/EC
Digital Line Interfaces: E1	ITU-T Rec. G. 703: Physical/electrical characteristics of hierarchical digital interfaces.
	Terminal Equipment Requirements (Site Controller and Routers): • TBR 12 (1993-12) / A1 (1996-01), which is a subset of EN 300 248 (Unstructured E1) • TBR 13 (1996-01) which is a subset of EN 300 420 (Structured E1)
	Leased Line Requirements: • ETSI EN 300 418 v1.2.1 (2001-07) and ETSI EN 300 247 v1.2.1 (2001-07) (Unstructured E1) • ETSI EN 300 418 v1.2.1 (2001-07) and ETSI EN 300 419 v1.2.1 (2001-07) (Structured E1)

Standards Specifications	Description
	• ETSI EN 300 766 v1.2.1 (2001-07) with octet sequence integrity. (Fractional E1) In case of base stations connected in a redundant ring structure the lowest sum of the link delays between a base station and the zone core shall not exceed 14 ms. No more than 10 base stations can be connected in a ring.
X.21	ITU-T Rec. V11: Electrical characteristics for balanced double current interchange circuits. ETSI EN 300 766 v1.2.1 (2001-07)
Safety	EN60950 - 1: Harmonized Safety Standard R56: Motorola Solutions international installation standard
EMC	EN 301 489-1: Common Technical Requirements EN 301 489-18: Specific Requirements for TETRA EN 50121-4 : Railway applications EMC
Environmental	EN 300 019-1-1 class 1.2 Storage EN 300 019-1-2 class 2.3 Transportation EN 300 019-13 class 3.2 Operation, extended temp -30 °C to 55 °C without fans EN 300 019-13 class 3.2 Operation, extended temp -30 °C to 60 °C with fans Telcordia (formerly Bellcore) GR-63-CORE Network Equipment Building System (NEBS™) (Seismic zone 4) with a seismic rack

14.3 Cabinet and Module Specifications

The cabinet and module specifications include the dimensions for the cabinet and the technical specifications for the different modules in the cabinets.

14.3.1 MTS Cabinets Frequency Range

The following table lists the frequency values supported for the MTS LiTE, MTS 2, MTS 4.

Table 116: Frequency values supported for the MTS LiTE, MTS 2, MTS 4

MTS Cabinet	Frequency Range
MTS LiTE	400 MHz and 800 MHz
MTS 2	260 MHz, 400 MHz, 800 MHz and 900 MHz
MTS 4	260 MHz, 400 MHz, and 800 MHz

14.3.2
Dimensions of the MTS Cabinets

The following table lists the dimensions of the MTS LiTE, MTS 2, MTS 4, and MTS 4 Expansion Cabinets.

Table 117: Dimensions of the MTS 2, MTS 4, and MTS 4 Expansion Cabinets

Physical Dimensions	Description
Depth:	MTS LiTE: 480 mm MTS 2: 472 mm MTS 4: 570 mm
Height:	MTS LiTE: 380 mm MTS 2: 605 mm MTS 4: 1430 mm
Width:	MTS LiTE: 450 mm MTS 2: 443 mm MTS 4: 550 mm
Weight:	with full equipment: MTS LiTE: 35 kg MTS 2: 48 kg MTS 4: 141 kg with full equipment incl. packaging: MTS LiTE: 51 kg MTS 2: 64 kg MTS 4: 170 kg

14.3.3
RF Specifications

Table 118: RF Specifications

RF Specifications	Description	Value or Range
Frequency	Low 400 MHz band (TETRA and TEDS):	350 MHz 430 MHz
	High 400 MHz band (TETRA and TEDS):	380 MHz 470 MHz
	260 MHz (TETRA)	260 MHz – 275 MHz
	800 MHz (TETRA and TEDS):	806 MHz – 870 MHz
	900 MHz (TETRA and TEDS):	917 MHz – 942 MHz
	Duplex spacing:	400 MHz: 10 MHz 260 MHz: 9 MHz

RF Specifications	Description	Value or Range
		800 MHz: 45 MHz 900 MHz: 15 MHz
	Bandwidth:	400 MHz: 5 MHz 260 MHz: 6 MHz 800 MHz: 19MHz 900 MHz: 10 MHz
	Channel spacing TETRA:	25 kHz (Raster in 6.25 kHz)
	Channel spacing TEDS:	25/50 kHz (Raster in 6.25 kHz)
Transmit Power	Maximum: • 10 W (TEDS High Power, one TX ant., 2 BRs, 2 Duplexers) • 20 W (TEDS High Power, two TX ant., 2 BRs, with fans, 2 Duplexers) • 25 W (TETRA Low Power, two TX ant., 2 BRs, 2 Duplexers) • 40 W (TETRA High Power, two TX ant., 2 BRs, with fans, 2 Duplexers) **NOTICE:** Cavity Combiner and channel spacing less than 250 kHz gives maximum output power between 20 W and 25 W.	
	Adjustable down with 12 dB	

NOTICE:
The first usable TETRA center frequency in each range is 12.5 kHz above the low range and below high range.

The first usable TEDS center frequency in each range is:

- 12.5 kHz above the low range and below high range for 25 kHz channel
- 25 kHz above the low range and below high range for 50 kHz channel

NOTICE: ETSI Compliance Notice: The Base Radio is only ETSI-compliant when used in conjunction with a RF distribution system (RFDS) supplied by Motorola Solutions. The Base Radio shall not be used without a RFDS approved by Motorola Solutions.

Table 119: Auto Tune and Manual Tune Cavity Combining Transmitter-to-Antenna Port Specifications

Specifications	Value or Range
Cavity Combiner Maximum Insertion Loss:	3.9 dB maximum
(@ 150 kHz Channel Spacing, four-channel)	3.5 dB typical **NOTICE:** The cavities are factory set for 150 kHz spacing. Cavities are not tuned to customer frequency and may be field tuned. Cavity combiner insertion loss is combiner only.
Duplex Filter Insertion Loss	1.6 dB maximum
	1.2 dB typical
Total RFDS Insertion Loss	4.5 - 5.2 dB
150 kHz Channel Spacing, four-channel	5.2 dB typical

Specifications	Value or Range
250 kHz Channel Spacing, four-channel	4.7 dB typical
250 kHz Channel Spacing, two-channel	4.5 dB typical

Table 120: Hybrid Combining Transmitter-to-Antenna Port Specifications

Specifications	Value or Range
Hybrid Combiner Maximum Insertion Loss:	3.3 dB maximum
	3.2 dB typical
Duplex Filter Insertion Loss	1.6 dB maximum
	1.2 dB typical
Total Hybrid Combiner Insertion Loss	4.9 dB maximum
	4.4 dB typical
Input Return Loss	14 dB minimum
	>20 dB typical
Antenna-to-PA Isolation	20 dB minimum

14.3.4
Transmitter Specifications

The following tables list the TETRA and TEDS specifications.

NOTICE: All specifications listed in the following two tables are observed at RF distribution system output unless stated otherwise.

Table 121: Transmit Specifications – TETRA

Transmitter Specification	Value or Range
Pi/4DQPSK Transmitted Power (10, 25, 40 Watts depending on the configuration) measured at RFDS antenna port:	10 W, 25 W, 40 W
Normal Conditions:	+2.0 dB
Extreme Conditions:	+3.0/-4.0 dB
Transmitter Power (off/standby)	-36 dBm/-40 dBc
Frequency Stability	± 0.007 ppm **NOTICE:** Stability with site reference connected to station and locked to GPS.
Base Radio Power Limits	High Power BR: 5W - 80 W Low Power BR: 2W - 36W **NOTICE:** Base Radio Power Limits above are also applicable for 800 MHz. 260 MHz Low Power BR: 2W - 40 W

Transmitter Specification	Value or Range	
Transmitter Power Control	12 dB	
Carrier Feedthrough	-26 dBc	
Transmitter Modulation Accuracy	6% RMS/Burst	(30% peak/symbol)
Synchronization	1/4 symbol	
Adjacent-channel Power due to Modulation (Normal Conditions)	± 25 kHz ± 50 kHz ± 75 kHz	-60 dBc (800 MHz/ 900 MHz: -55 dBc) -70 dBc (800 MHz/ 900 MHz: -65 dBc) -70 dBc(800 MHz/ 900 MHz: -65 dBc)
Adjacent-channel Power due to Modulation (Extreme Conditions)	± 25 kHz ± 50 kHz ± 75 kHz	-50 dBc(800 MHz/ 900 MHz: -45 dBc) -60 dBc(800 MHz/ 900 MHz: -55 dBc) -60 dBc (800 MHz/ 900 MHz: -55 dBc)
Adjacent-channel Power due to Switching	-50 dBc	
Adjacent-channel Power due to Linearization	-30 dBc	
Tx Conducted Emission	100 - 250 kHz 250 - 500 kHz 500 - frb kHz At receive band	-80 dBc -85 dBc -90 dBc -100 dBc
Intermodulation Attenuation	70 dB	
RF Input Impedance	50 (nom.)	

Table 122: Transmit Specifications – TEDS

Transmitter Specification	Value or Range
QAM (TEDS) Transmitted Power (10, 20 Watts depending on the configuration) measured at RFDS antenna port:	10 W, 20 W
Normal Conditions:	+2.0 dB
Extreme Conditions:	+3.0/-4.0 dB
Transmitter Power (off/standby)	-36 dBm/-40 dBc
Frequency Stability	± 0.007 ppm **NOTICE:** Stability with site reference connected to station and locked to GPS.
Base Radio Power Limits	High Power TEDS BR: 2W - 32 W

Transmitter Specification	Value or Range	
	NOTICE: Base Radio Power Limits above are also applicable for 800 MHz.	
Transmitter Power Control	12 dB	
Transmitter Modulation Accuracy	10% RMS/Burst	
Synchronization	1/4 symbol	
Adjacent-channel power (25kHz)	**Offset**	**Limit**
	25	-55
	50	-65
	75	-67
Adjacent-channel power (50kHz)	**Offset**	**Limit**
	37.5	-55
	62.5	-63
	87.5	-65
Adjacent-channel Power due to Switching	-45 dBc	
Tx Conducted Emission (25kHz TEDS)	100 - 250 kHz	-70 dBc
	250 - 500 kHz	-80 dBc
	500 - 2500 kHz	-80 dBc
	2500 - frb kHz	-90 dBc
	>frb	-95 dBc
Tx Conducted Emission (50kHz TEDS)	112.5 - 262.5 kHz	-70 dBc
	262.5 - 500 kHz	-75 dBc
	500 - frb kHz	-80 dBc
	>frb	-95 dBc
Intermodulation Attenuation	70 dB	
RF Input Impedance	50 (nom.)	

14.3.5
Receiver Specifications

The receiver specifications are listed in Table 123: Receiver Specifications – TETRA on page 435 and Table 124: Receiver Specifications – TEDS on page 436.

All specifications listed in the following two tables are through the RF Distribution System, unless otherwise stated.

Table 123: Receiver Specifications – TETRA

Receiver Specification	Value or Range
Sensitivity (normal conditions, unprotected T1, static, 4% BER):	

Receiver Specification	Value or Range
population mean:	-120.0 dBm(-119.5 dBm 800 MHz)
spec limit:	-117.5 dBm
Sensitivity (normal conditions, faded, TU50, 4% BER):	
population mean :	-113.5 dBm(-113.5 dBm 800 MHz)
spec limit:	-111.0 dBm
Degradation (extreme conditions, static and faded)	3 dB
Nominal Error Rate (unprotected T1):	
Static, -85 to -40 dBm:	0.01%
Static -40 to -20 dBm:	0.1%
TU50, -84 to -40 dBm:	0.4%
Maximum On-channel Desired Power Level	-20 dBm
Co-channel Interference (19 dB C/I, faded, unprotected T1): TU50	2.0%
Adjacent Channel Interference (faded, unprotected T1, normal conditions, 45 dB C/I (40 dB C/I for 800 MHz), at -103 dBm): TU50	2.0%
Adjacent Channel Interference (faded, unprotected T1, extreme conditions, 35 dB C/I (30 dB C/I for 800 MHz)), at -97 dBm): TU50	2.0%
Blocking (static, normal conditions, 4% BER):	
50 - 100 kHz	-40 dBm
100 - 200 kHz	-35 dBm
200 - 500 kHz	-30 dBm
>500 kHz	-25 dBm
Spurious Responses (normal conditions)	6 max.
1st Image	70 dB
1/2 IF	70 dB
2nd Image	70 dB
1/2 2nd IF	70 dB
Intermodulation Response Rejection: Normal conditions	65 dB

Table 124: Receiver Specifications – TEDS

Receiver Specification	Value or Range
Degradation (extreme conditions, static and faded)	3 dB
Maximum On-channel Desired Power Level	-30 dBm
Co-channel Interference (19dB C/I, faded, 16QAM, rate=1/2) TU50:	10.0%
Adjacent Channel Interference (static, 64QAM, 50kHz, 30dB C/I at -97dBm, rate = 1/1) Applicable for both normal and extreme conditions.	3.0%
Blocking 25kHz TEDS (static, normal conditions, 3% BER):	

Receiver Specification	Value or Range
75 kHz	-40 dBm
150 kHz	-35 dBm
350 kHz	-30 dBm
1, 2, 5, 10 MHz	-25 dBm
Blocking 50 kHz TEDS (static, normal conditions, 3% BER):	
150 kHz	-40 dBm
350 kHz	-35 dBm
700 kHz	-30 dBm
2, 5, 10 MHz	-25 dBm
Spurious Responses (normal conds, QAM4, 25k, static, rate=1/1)	
1st Image	68 dB
1/2 IF	68 dB
2nd Image	68 dB
1/2 2nd IF	68 dB
Intermodulation Response Rejection (normal conds, QAM4, 25kHz, static, rate = 1/1)	66 dB

14.3.6
Site Controller Specifications

Table 125: Site Controller Performance Specifications

Site Controller Specification	Value or Range
Power Consumption	20–25 W
Dimension	Height: 240 mm Width: 61 mm Depth: 393 mm
Weight	2.3 kg
Memory	DDRSDRAM: one removable, single-bank, 128 Mbyte module, 64-bit wide, 266 MHz data-rate, JEDEC-standard, 200-pin, PC2100, unbuffered, CAS latency 2.5, SO-DIMM.
	Boot Flash: a single, 16-bit wide sectored Flash device

14.3.7
Internal GPS Module Input Specifications

Table 126: Internal GPS Input Specifications

Internal GPS Input specifications	Description
Sensitivity	TTFF (Time to First Fix) = 120 s @ -133 dBm
Max input power level	-40 dBm
GPS antenna bias voltage	+5.0 V
Maximum output current	30 mA

14.3.8
MTS LiTE / MTS 2 Duplexer Specifications

Table 127: MTS LiTE / MTS 2 Duplexer Specifications

MTS 2 Duplexer Specifications	Description
Dimensions	Height: 170 mm Width: 70 mm Depth: 280 mm
Weight	5.3 kg
Forward Reverse Power Measurement Accuracy	+1.0/-1.2 dB

14.3.9
MTS LiTE / MTS 2 Preselector Specifications

Table 128: MTS LiTE / MTS 2 Preselector Specifications

MTS 2 Preselector Specifications	Description
Dimensions	Height: 85 mm Width: 70 mm Depth: 280 mm
Weight	2.8 kg

14.3.10
MTS 4 Duplexer Specifications

Table 129: MTS 4 Duplexer Specifications

MTS 4 Duplexer Specifications	Description
Dimensions	Height: 180 mm Width: 90 mm

MTS 4 Duplexer Specifications	Description
	Depth: 400 mm
Weight	7.6 kg
Forward Reverse Power Measurement Accuracy	±0.5 dB

14.3.11

MTS 4 Post Filter Specifications

Table 130: MTS 4 Post Filter Specifications

MTS 4 Post Filter Specifications	Description
Dimensions	Height: 100 mm Width: 167 mm Depth: 200 mm
Weight	5 kg
Forward Reverse Power Measurement Accuracy	±0.5 dB
TX signal	PI/4DQPSK, up to 4 carriers
Avg. Input Power	180 W

14.3.12

MTS 4 Preselector Specifications

Table 131: MTS 4 Preselector Specifications

MTS 4 Preselector Specifications	Description
Dimensions	Height: 90 mm Width: 180 mm Depth: 200 mm
Weight	3.6 kg

14.3.13

Auto Tune Cavity Combiner (ATCC) Specifications

Table 132: Auto Tune Cavity Combiner (ATCC) Specifications

Auto Tune Cavity Combiner (ATCC) Specifications	Description
Dimensions	Height: 173 mm Width: 447 mm Depth: 435 mm
Weight	12.2 kg

Auto Tune Cavity Combiner (ATCC) Specifications	Description
Vendor Default Settings	150 kHz channel spacing Fine-tune interval 8 hours

14.3.14
Manual Tune Cavity Combiner (MTCC) Specifications

Table 133: Manual Tune Cavity Combiner (MTCC) Specifications

Manual Tune Cavity Combiner (MTCC) Specifications	Description
Dimensions	Height: 173 mm Width: 447 mm Depth: 435 mm
Weight	11.3 kg

14.3.15
Hybrid Combiner Specifications

Table 134: Hybrid Combiner Specifications

Hybrid Combiner Specifications	Description
Dimensions	Height: 170 mm Width: 55 mm Depth: 255 mm
Weight	2.1 kg
Carrier combine power	2x35 W without fans 2x80 W with fans

14.3.16
Base Radio Specifications

Table 135: Base Radio Specifications

BR Specification	Description
Dimensions	Height: 240 mm Width: 124 mm Depth: 393 mm
Weight	8.9 kg

14.3.17

Power Supply Unit Specifications

Table 136: Power Supply Specifications

PSU Specifications	Description
Technical Requirements	Input Voltage DC: -41 to -60 VDC Input Voltage AC: 90 to 264 VAC; The PSU shall withstand 300 VAC Input Frequency AC: 45 to 66 Hz
	Output Voltage 1: 28.5 VDC 2% Output Current 1: 20 A
	Output Voltage 2: 7.0 VDC +5 -0% Output Current 2: 8 A
	Output Voltage ATCC: 28.5 VDC ±5% Output Current ATCC: 400 mA, 1000 mA peak for less than 3 ms
	Output Voltage Fan: 12–24 VDC ±5% Output Current Fan: 3 A (1 A for each output)
	Battery Charging Output Voltage 3: 40.5–57 VDC Output Current 3: 0–6 A (temperature dependent) Ripple and Noise at full load: ≤ 100 mVpp [20 MHz bandwidth]
	Total Output Power: 1035 W
	Efficiency: ≥ 84% @ 184 VAC to 270 VAC ≥ 80% @ 90 VAC to 184 VAC ≥ 88% @ –48 VDC ≥ 86% @ –40,5 VDC
	Hold up time, at AC mains dropout: 15 ms Hold up time, at 48 VDC input dropout: 2 ms @ 48 VDC operation, full load and +30 °C Minimum current when power supply switch is turned off: 2 mA
Safety	EN 60950-1/2001, UL 1950, CSA 22.2 No. 950, protection class 1, DC outputs designed as Safety Extra Low Voltage CE marked, designed to meet CB certification and cULus requirements
EMC	Immunity: EN 55024/1998 + A1/2001 EN 61000-4-3, EN 61000-4-2, EN 61000-4-6, EN 61000-4-5, EN 61000-4-4, EN 61000-4-11
	Emission: EN 55022 class A EN 61000-3-3, EN 61000-3-2
Dimensions	Height: 240 mm Width: 97 mm Depth: 391 mm

PSU Specifications	Description
Weight	5 kg

14.3.18
XHUB Controller Specifications

The following table lists the XHUB controller performance specifications.

Table 137: XHUB Controller Specifications

XHUB Controller Specification	Value or Range
Power Consumption	5 W to 8 W
Dimension	Height: 240 mm Width: 61 mm Depth: 393 mm
Weight	2.2 kg

14.3.19
RX Splitter Specifications

The following table lists the RX Splitter specifications.

Table 138: MTS 4 Expansion Cabinet RX Splitter Specifications

RX Splitter Specification	Value or Range
Dimension	Height: 139 mm Width: 124 mm Depth: 45 mm
Weight	0.4 kg

14.3.20
MTS LiTE, MTS 2, and MTS 4 Connectors

Table 139: MTS LiTE/MTS 2 Connectors

Connector	Type	Description
External GPS	SUB D	DB15 Female connector
Alarms	SUB D	DB25 Female connector
E1	RJ45	Functionality described in Hardware installation chapter
X.21	SUB D	DB15 Male connector Functionality described in Hardware installation chapter

Connector	Type	Description
Ethernet	RJ45	Functionality described in Hardware installation chapter
Internal GPS	N type	Female connector
Mains input	IEC 320	230 V Supply
DC	-48 VDC	2 pin Phoenix connector
Antennas	DIN 7–16	Female connector

Table 140: MTS 4 Connectors

Connector	Type	Description
External GPS1 and GPS2	SUB D	DB15 Female connector
Alarms	SUB D	DB25 Female connector
E1	RJ45	Functionality described in Hardware installation chapter
X.21	SUB D	DB15 Male connector
Ethernet	RJ45	Functionality described in Hardware installation chapter
Internal GPS	N type	Female connector
Mains input	IEC 320	230 V Supply
DC	-48 VDC	4 pin Phoenix connector
Antennas	DIN 7–16	Female connector

Chapter 15

Expansion Options

Expansion options can be ordered from Motorola Solutions. To order an expansion option, see the Ordering Guide on ECAT.

15.1

Additional Base Radio for MTS 2

It is possible to complement MTS 2 (with one Base Radio) with additional Base Radio.

NOTICE: The second Base Radio for MTS 2 is delivered with the expansion kit that includes required equipment and cables.

15.1.1

Cable Connections

Cable connections before expansion

Figure 195: RF Cabling Diagram for MTS 2 with one TX/RX ant. and up to two additional RX ant. before Expansion

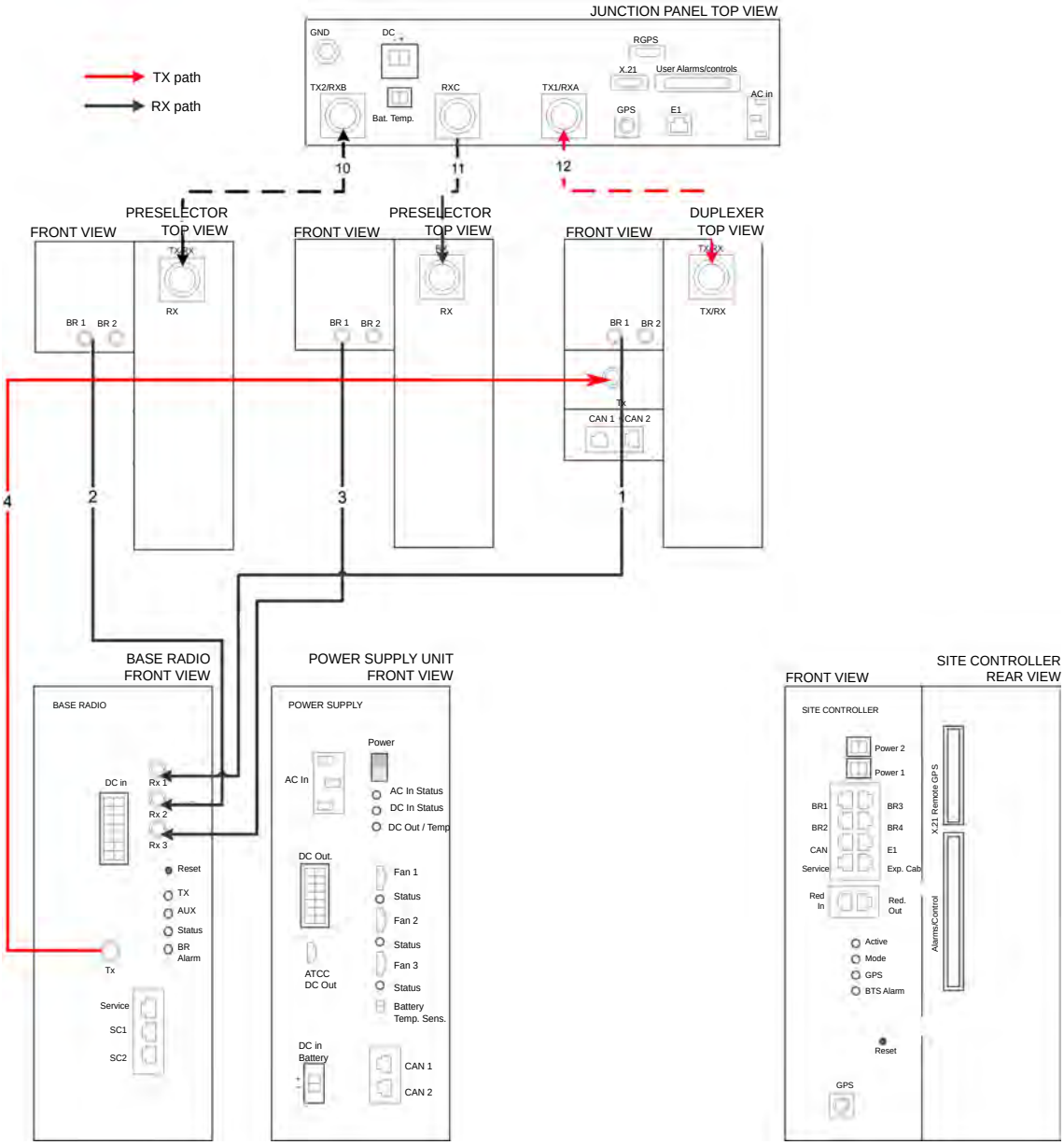

Figure 196: E1 and Ethernet Cabling Diagram for MTS 2 before Expansion

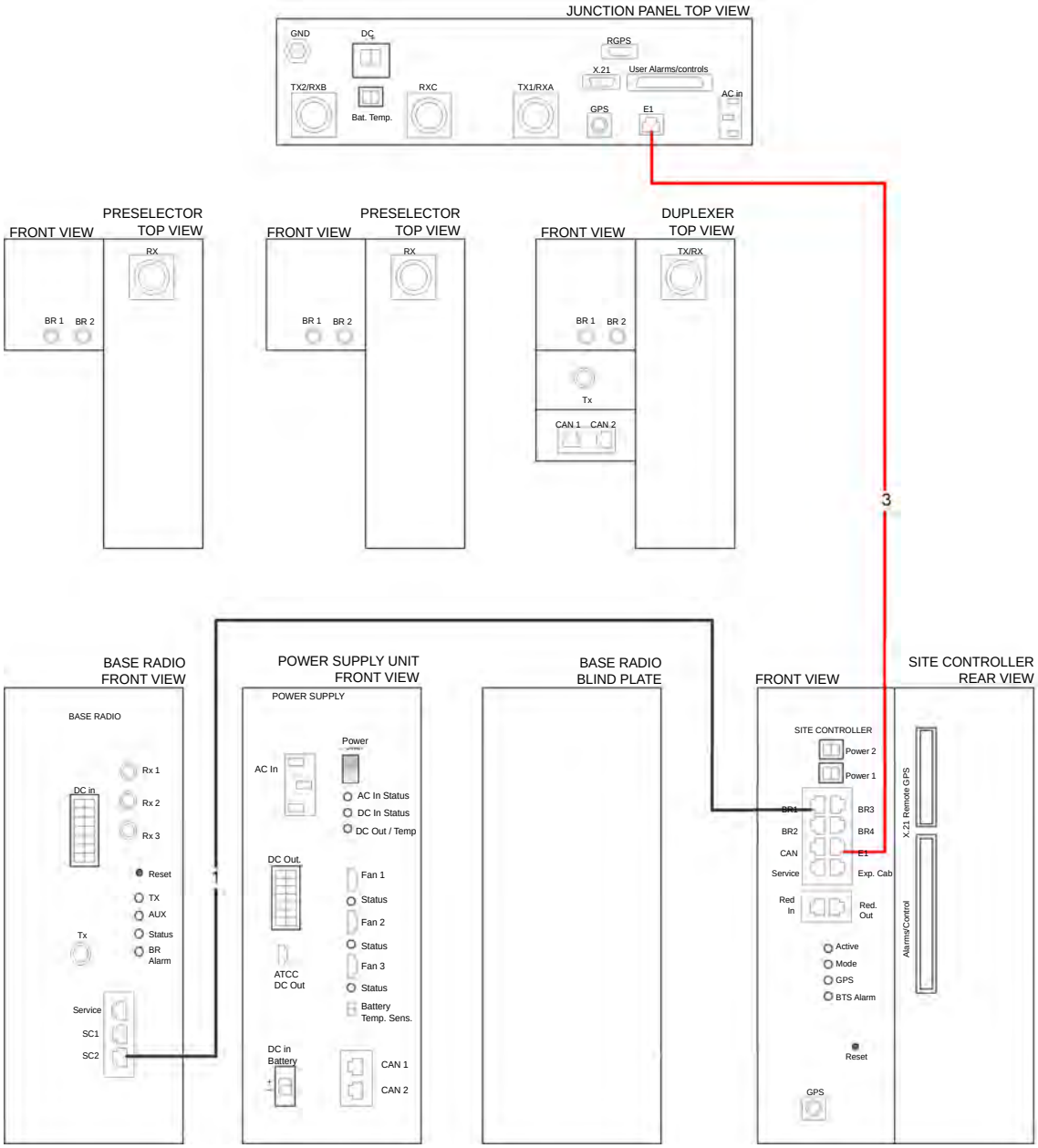

Cable connections after expansion

Figure 197: RF Cabling Diagram for MTS 2 with one TX/RX ant. and up to two RX ant. after Expansion

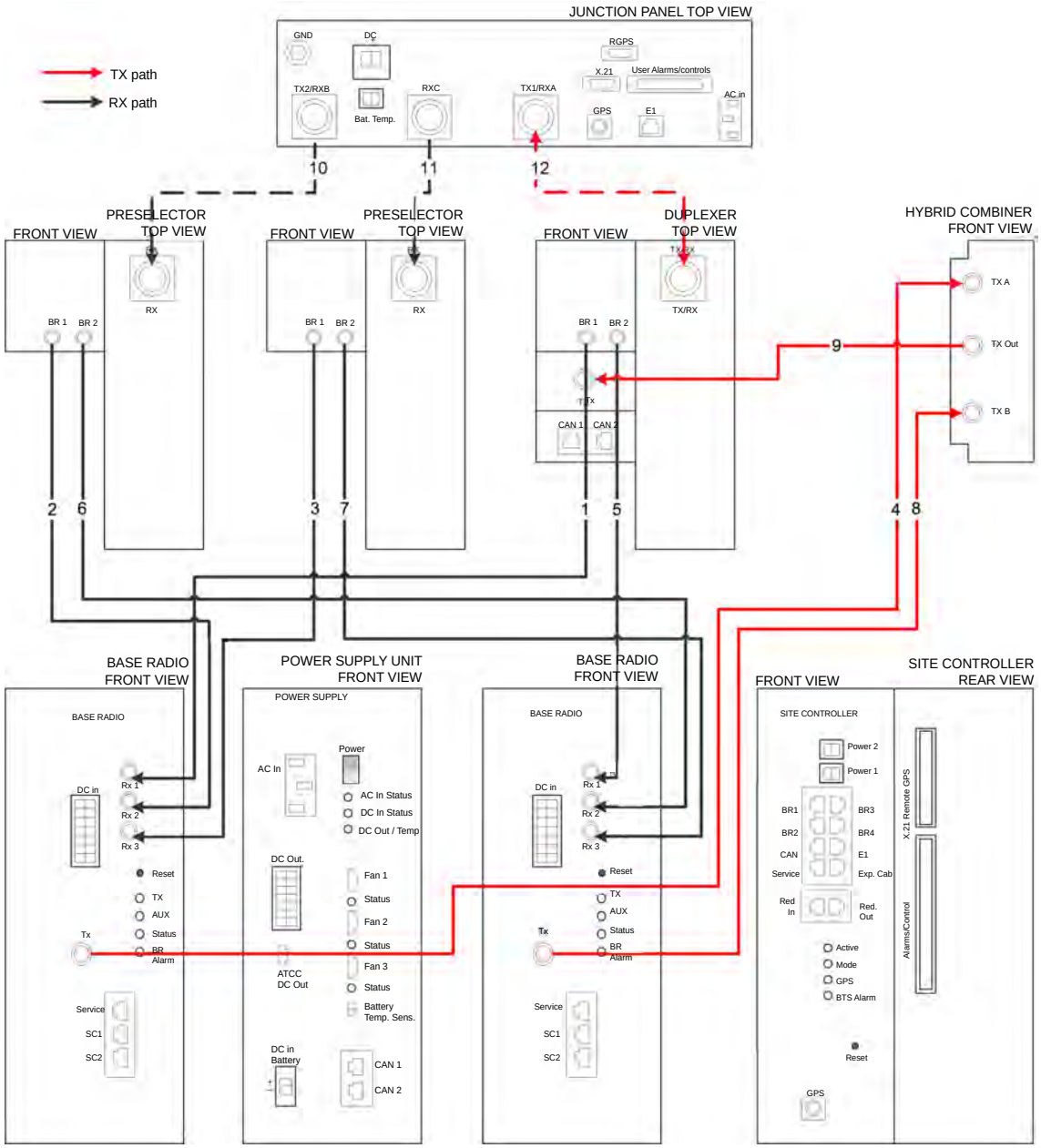

NOTICE: For non-duplexed RF/TX, please see Figure 111: RF Cabling/Connections for MTS 2 with One TX ant. and up to Two Additional RX ant. on page 199.

Figure 198: E1 and Ethernet Cabling Diagram for MTS 2 after Expansion

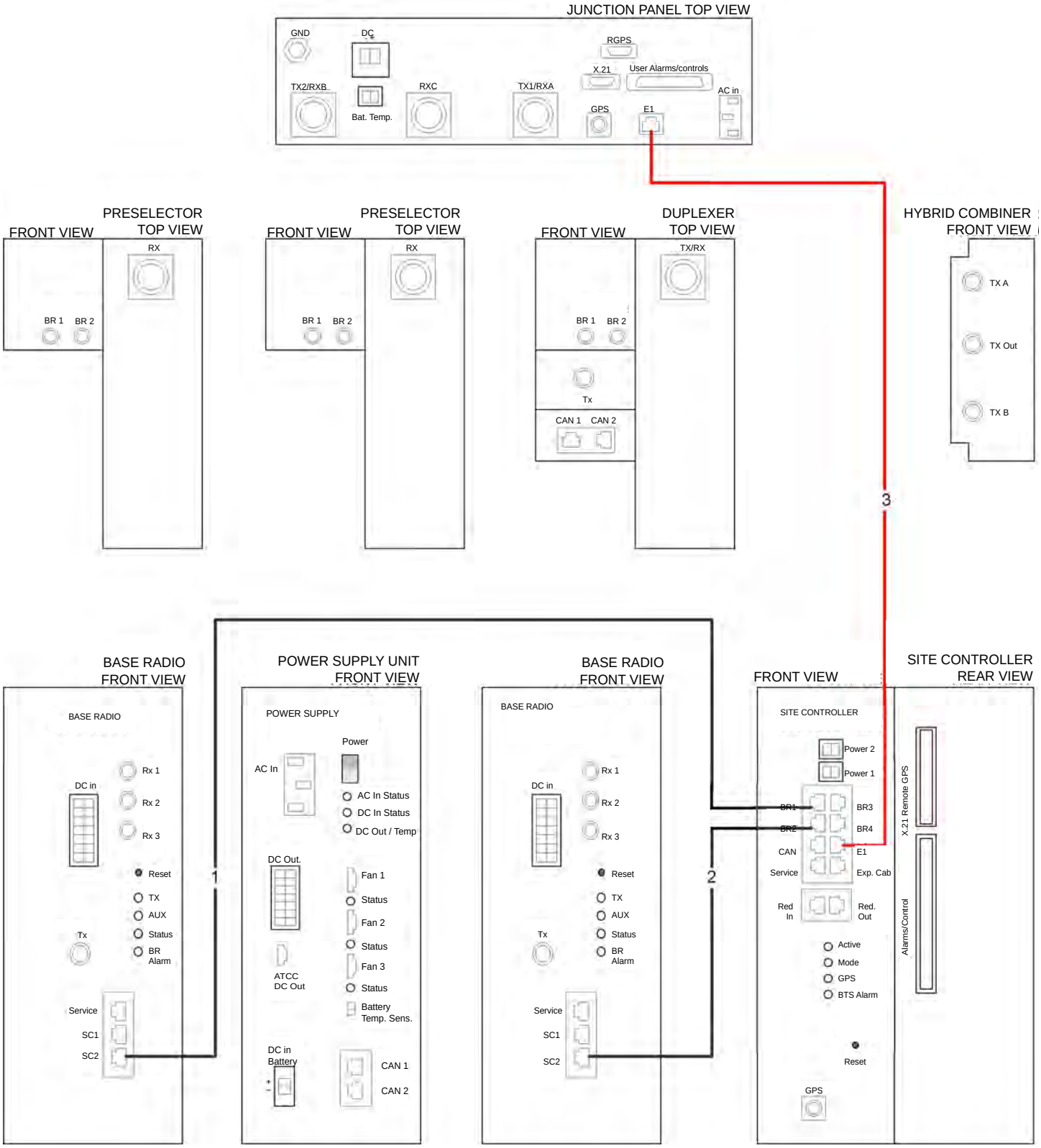

15.1.2

Adding an Additional Base Radio to MTS 2

When and where to use:
Follow this process install the second Base Radio to the MTS 2 cabinet.

Process:

1. Installing an Additional Base Radio to MTS 2 on page 449
2. Installing the Hybrid Combiner on page 450
3. Configuring and Verifying the Base Radio on page 251

15.1.2.1

Installing an Additional Base Radio to MTS 2

Procedure:

1. Remove the Blind Plate where the additional Base Radio is to be assembled.
2. Label all new Rx cables with labels included in the expansion kit.
3. Attach the Rx cables to the filters. Connect them according to the scheme below:

#	Part no	Cable type	Label	From	To
5	3066543B01	Rx cable	Rx1	Filter pos 1 / BR2	BR2 / Rx1
6	3066543B01	Rx cable	Rx2	Filter pos 2 / BR2	BR2 / Rx2
7	3066543B01	Rx cable	Rx3	Filter pos 3 / BR2	BR2 / Rx3

NOTICE: Index numbers in table above refer to cable connections shown in Figure 197: RF Cabling Diagram for MTS 2 with one TX/RX ant. and up to two RX ant. after Expansion on page 447.

NOTICE: At this stage only connect the cables to the filters.

4. Attach the Tx-cable to the **Tx** input of the filter in position 2.

NOTICE: At this stage only connect the cable to the filter.

5. Attach the Ethernet cable 3066544B02 to the **BR2** connector on the Site Controller. This is illustrated in Figure 198: E1 and Ethernet Cabling Diagram for MTS 2 after Expansion on page 448 as connection #2.

NOTICE: At this stage only connect the cable to the Site Controller. Follow the color scheme displayed on the Site Controller front panel.

6. Insert the additional Base Radio by aligning the side rails with the appropriate rail guides inside the Base Radio chassis.
7. Gently push the additional module completely into the Base Radio chassis assembly using the module handle.

CAUTION: Be careful not to damage any of the cables previously connected when pushing the Base Radio into position.

8. Secure the additional module using two TORX screws. Tighten the screws to a torque of 2.7 Nm.

9 Connect the Power cables, Ethernet cable, Tx cable and Rx Cables to the BR front plate. Make sure cables are connected according to scheme below:

#	Part number	Cable type	Label	From	To
N/A	3066545B01	DC Power Cable	N/A	PSU / DC Out	BR1 / DC IN
					BR2 / DC In
					SC1 / Power
5	3066543B01	Rx Cable	Rx1	Filter pos 1 / BR2	BR2 / Rx1
6			Rx2	Filter pos 2 / BR2	BR2 / Rx2
7			Rx3	Filter pos 3 / BR2	BR2 / Rx3
N/A	3066543B05	Tx Cable	N/A	Filter pos 2 / Tx	BR2 / Tx
2 in **A)**	3066545B02	Ethernet	N/A	SC1 / BR2	BR2 / SC1

NOTICE: Index numbers in table above refer to cable connections shown in Figure 197: RF Cabling Diagram for MTS 2 with one TX/RX ant. and up to two RX ant. after Expansion on page 447 or in Figure 198: E1 and Ethernet Cabling Diagram for MTS 2 after Expansion on page 448 for **A)**.

NOTICE: DC Power Cable (3066545B01) already exists before expansion of MTS 2.

10 Switch ON the Power Supply Unit (You do not need to do this if doing a hotswap).

15.1.2.2
Installing the Hybrid Combiner

If current MTS 2 configuration include one Duplexer, installation of the Hybrid Combiner also included in the expansion option is necessary.

NOTICE: If current MTS 2 configuration includes two Duplexers, installation of the Hybrid Combiner is not needed.

Procedure:

1 Switch OFF the Power Supply Unit.

2 On the Duplexer, unplug the TX cable connected to the first Base Radio.

3 Assemble the Bracket with the three M6x10 screws.

4 Fasten the two M4x10 screws that are to hold the Hybrid Combiner, but do not tighten them fully.

5 Place the Hybrid Combiner on the bracket of the cabinet, with the heat sing facing inwards toward the center of the cabinet.

6 Slide the Hybrid Combiner at an angle ensuring that the lip at the back of the Hybrid Combiner is secured behind the bracket.

7 Tighten the two M4x10 screws to the bracket.

8 Attach the TX cables according to the scheme below:

#	Part number	From	To	Notes

4	3066543B12	BR1 / TX	Hybrid Combiner / TX A	Existing cable previously unplugged from the Duplexer
8	3066543B05	BR2 / TX	Hybrid Combiner / TX B	
9	3066543B06	Hybrid Combiner / TX Out	Duplexer / TX	

NOTICE: Index numbers in table above refer to cable connections shown in Figure 197: RF Cabling Diagram for MTS 2 with one TX/RX ant. and up to two RX ant. after Expansion on page 447.

9 Switch ON the Power Supply Unit.

15.1.3
Configuration

When the additional Base Radio has been installed properly it needs to be configured and verified. In order to do so, follow Configuring and Verifying the Base Radio on page 251.

In addition to this, the following parameters need to be configured in TESS application:

- Factory password
- Field password
- Cabinet ID
- Position ID
- Carrier Number (TX/RX frequencies are auto-generated based on Carrier Number setting)
- Default TX Power level

NOTICE: When these parameters have been configured in TESS Application and after the modified configuration file has been uploaded to the Site Controller, the complete site needs to be reset to implement the configuration change.

15.2
Additional Module Cage for MTS 4

It is possible to complement MTS 4 with additional module cage.

NOTICE: The module cage for MTS 4 is delivered with the expansion kit that includes required equipment and cables.

15.2.1
Adding an Additional Module Cage to MTS 4

Follow the procedure below to add a second module cage to the MTS 4 cabinet.

Procedure:

1 Remove the Module Cage Beauty Plate.

2 Mount all cables going from the lower Module Cage in your specific configuration and fix them temporarily in the rack before mounting the air divider and module cage.

NOTICE: This would typically be:

- Ethernet cables from Base Radio(s) in lower Module Cage to SC in upper Module Cage (SC2).
- Ethernet cables from Base Radio(s) in upper Module Cage to SC in lower Module Cage (SC1).
- CAN Bus cables to and from Filters.

3 Connect the Rx cables to the filters and let them hang on the back side behind Cavity Combiners that may exist in configuration.

4 Connect the AC Power cable (3066553B01), the DC Power cable (3066553B01) and the Battery Sensor cable (3066556B02) to the adequate connectors on the Junction Panel and let them hang on the back side behind Cavity Combiners that may exist in configuration.

5 Catch Rx cables, AC Power cable, DC Power cable and Battery Sensor cable in the empty space where new module cage is to be assembled and temporarily fix them at the front.

6 Assemble the Air Separator shelf above the existing Module Cage. Use four M6x16 screws included in the expansion kit.

7 Assemble the new Module Cage on top of the Air Separator shelf. Use eight M6x16 screws included in the expansion kit.

NOTICE: You may have to temporarily remove the fans in order to fasten the screws.

8 If applicable, remove the Power Supply Unit Blind Plate.

NOTICE: If Power Supply Unit has been pre-assembled in your configuration, jump directly to Step 8.

9 Place the Power Supply Unit on the slide rails in the Module Cage and push it to the back.

10 Secure the Power Supply Unit to the Module Cage with the two M4x10 Torx screws and lock the washers.

11 Connect the power supply cables and optional backup battery cables according to the scheme below:

Part no	Cable type	From	To
3066551B01	DC Power Cable	Junction panel / DC2	PSU2 / DC In
3066553B01	AC Power Cable	Junction panel / AC In 2	PSU2 / AC In
3066556B02	Batt Sens cable	Junction panel / Bat Temp 2	PSU2 / Battery Temp. Sens.
3066545B01	DC Power Cable	BR3 / DC In	PSU2 / DC Out
		BR4 / DC In	
		Site Controller / Power	

NOTICE: If Base Radio being added is the second Base Radio in a Module Cage (BR2 or BR4), DC Power Cable (3066545B01) is already existing in configuration.

12 Connect the RJ45 cable according to the scheme below:

Part no	Cable type	From	To

3066544B06	RJ45 Cable	PSU2 / CAN1	CAN socket where terminator is situated (terminator to be removed and replaced by the cable instead). Could be on a filter or ATCC. In case of no redundant Site Controller, the terminator should be placed in PSU 2/ CAN 2 output.

13 Switch ON the Power Supply Unit.

14 Check the LED indicators to verify the PSU is operating correctly.

15.2.2
Configuration

No configuration in itself is needed for the module cage, but the Power Supply Unit needs to be configured and this is described in Updating the Mapping List with the New PSU TrackID on page 365.

Installation and configuration of additional Base Radios are described separately in Additional Base Radio for Existing Module Cage in MTS 4 on page 453.

Furthermore, if an additional Site Controller is ordered as a separate expansion kit, it needs to be installed and configured, see Redundant Site Controller on page 461.

15.3
Additional Base Radio for Existing Module Cage in MTS 4

It is possible to add a Base Radio into an existing module cage of the MTS 4.

NOTICE: The additional Base Radio is delivered with the expansion kit that includes required equipment and cables.

15.3.1

Cable Connections

Cable Connections Before Expansion

Figure 199: RF Cabling of MTS 4 with one TX ant. Before Expansion

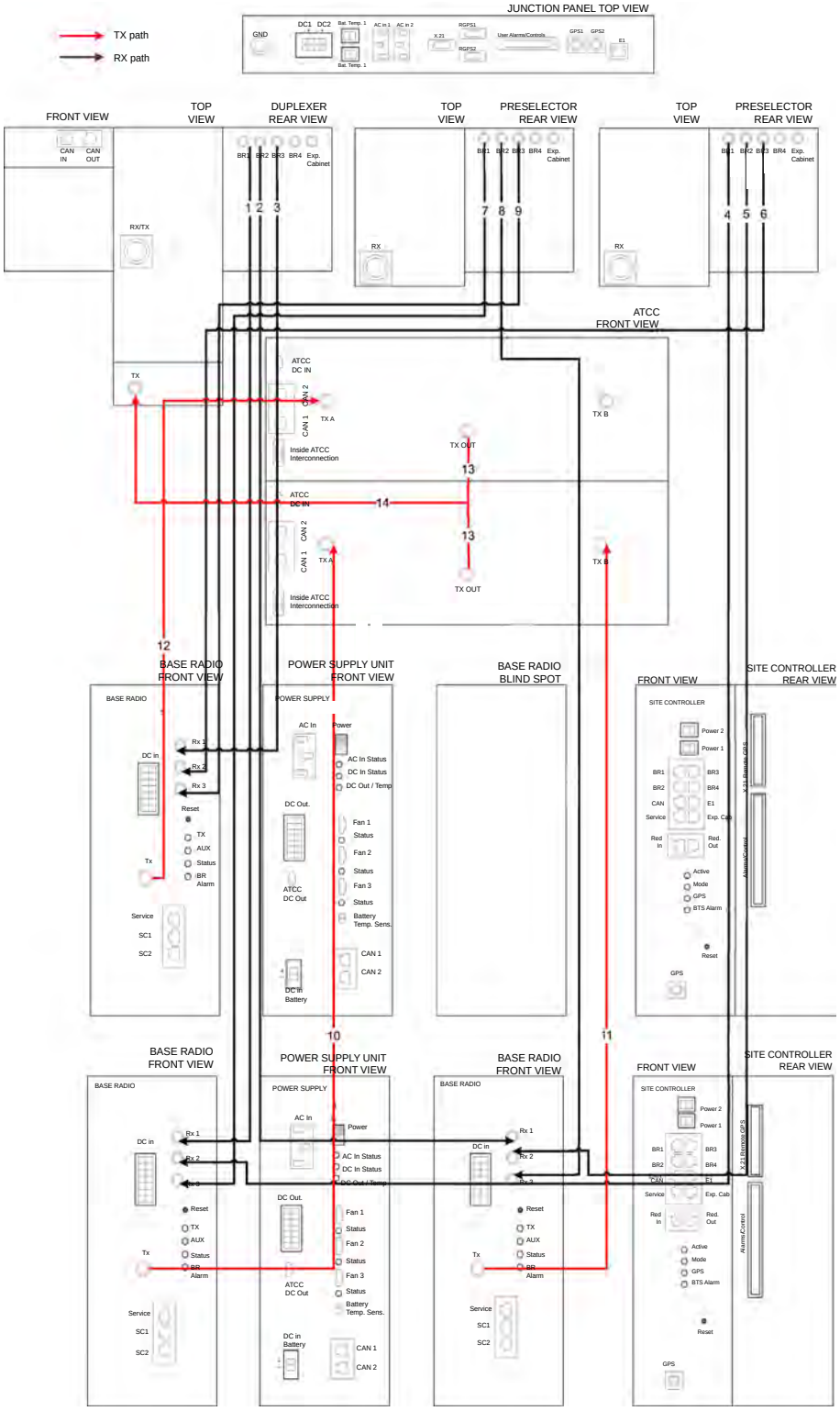

Figure 200: RF Cabling of MTS 4 with two TX ant. Before Expansion

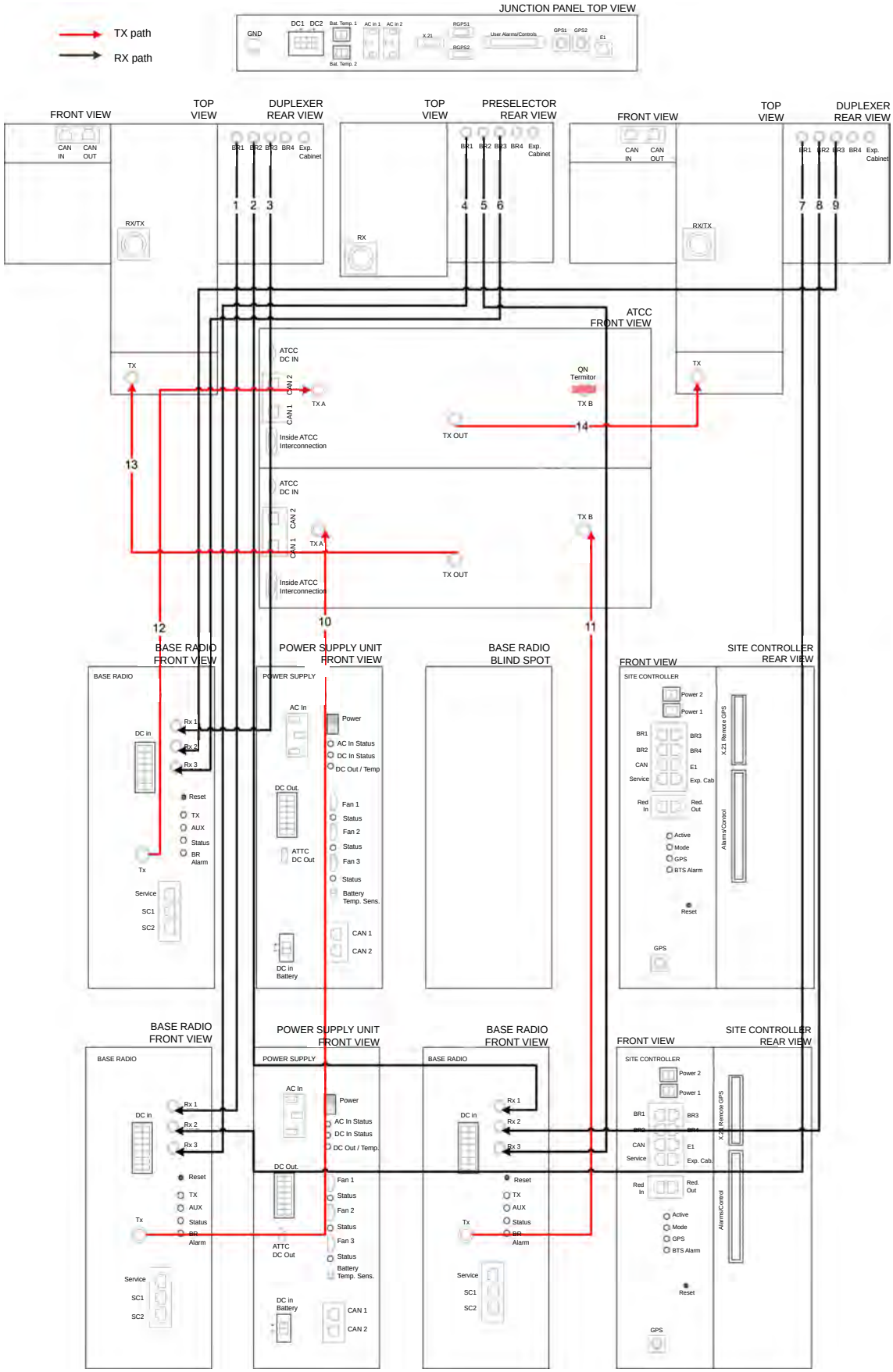

Figure 201: E1 and Ethernet Connections of MTS 4 Before Expansion

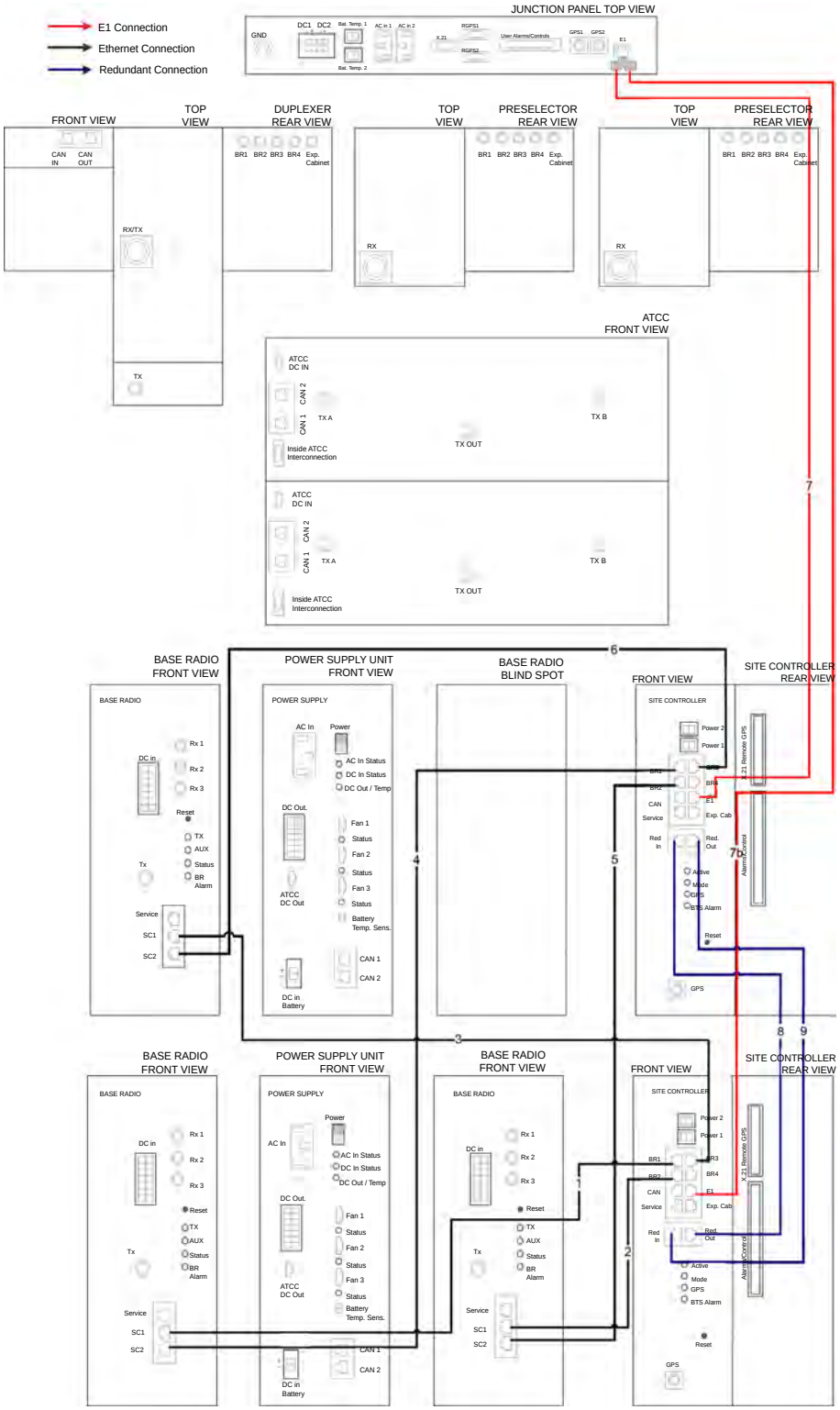

Cable Connections After Expansion

Figure 202: RF Cabling Diagram of MTS 4 with One TX ant. After Expansion

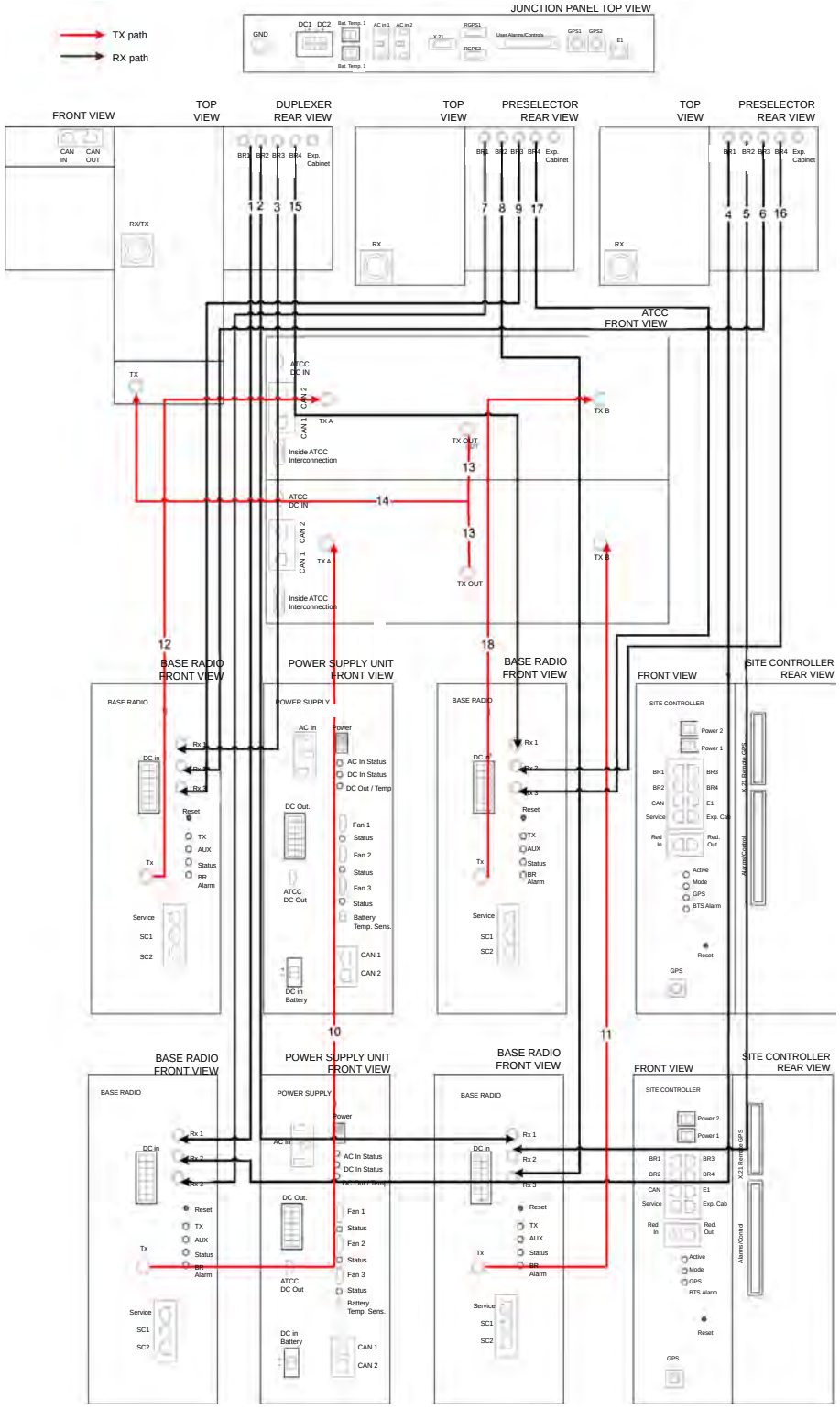

NOTICE: Cables 15, 16, 17, and 18 in Figure 202: RF Cabling Diagram of MTS 4 with One TX ant. After Expansion on page 457 have been added during expansion.

Figure 203: RF Cabling Diagram of MTS 4 with two TX ant. After Expansion

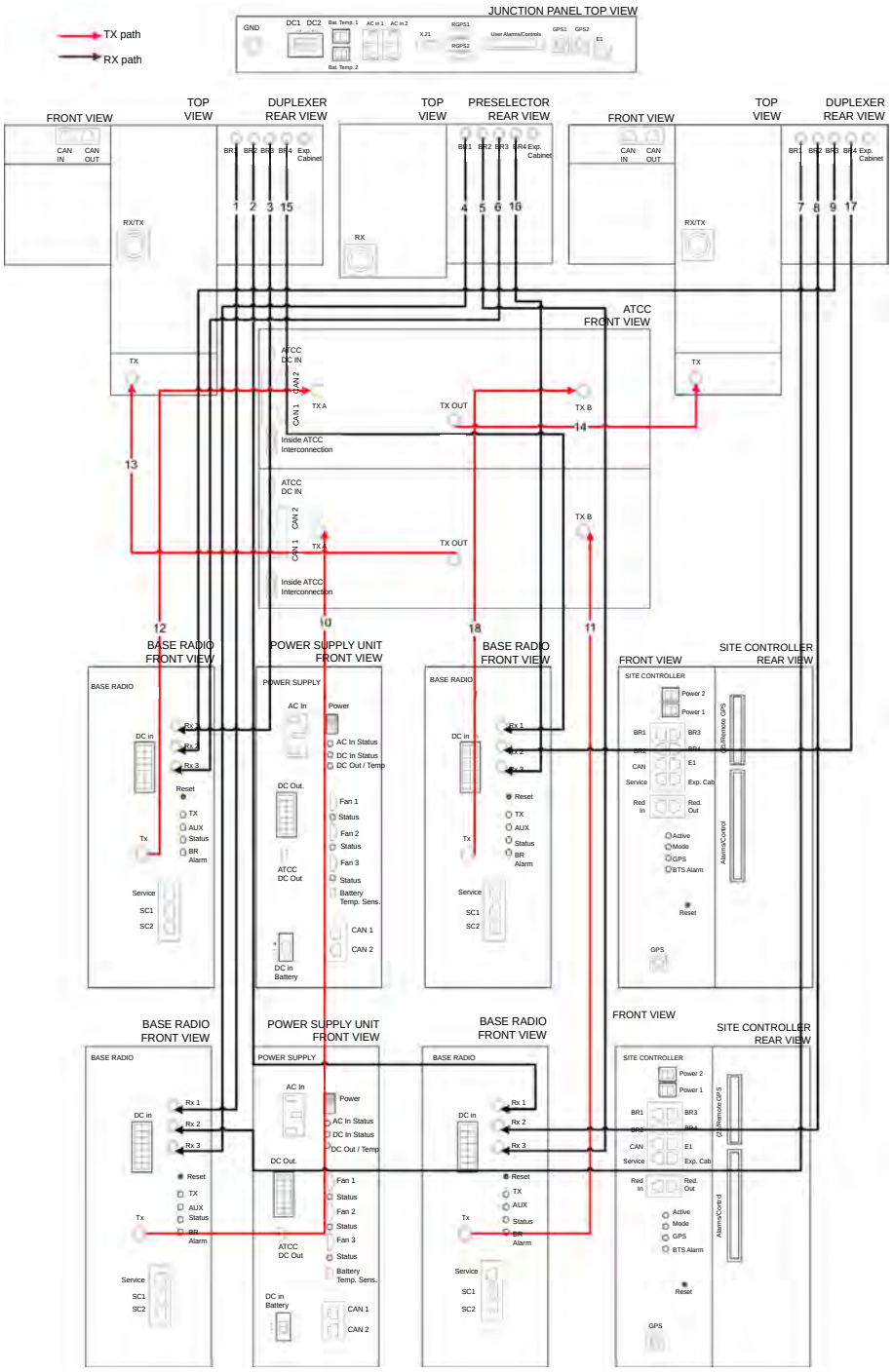

NOTICE: Cables 15, 16, 17, and 18 in Figure 203: RF Cabling Diagram of MTS 4 with two TX ant. After Expansion on page 458 have been added during expansion.

Figure 204: E1 and Ethernet Cabling of MTS 4 After Expansion

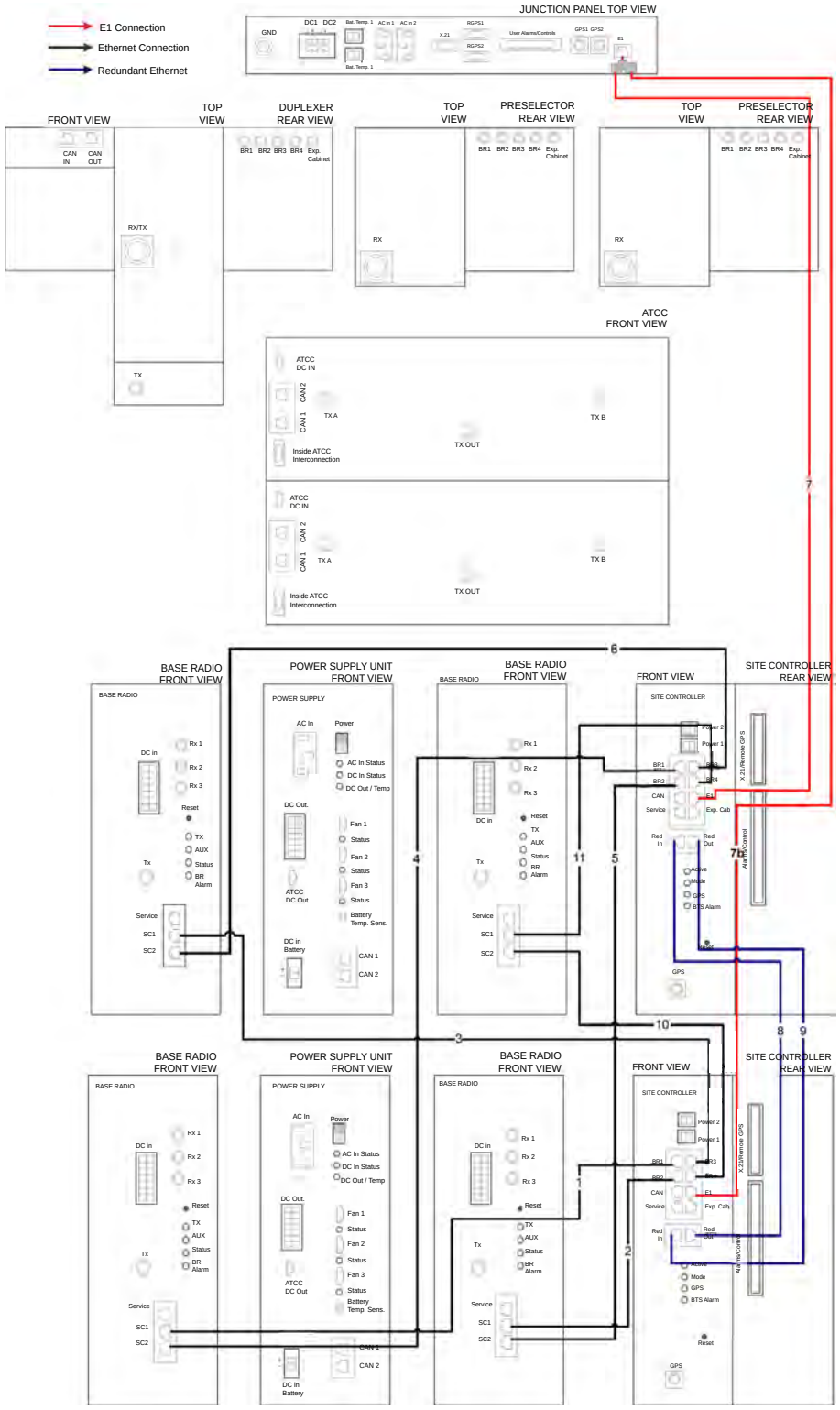

NOTICE: Cables 10 and 11 in Figure 204: E1 and Ethernet Cabling of MTS 4 After Expansion on page 459 have been added during expansion.

15.3.2

Adding an Additional Base Radio to MTS 4

Follow the procedure below to install an additional Base radio for MTS 4. The images below illustrate cable connections before adding a third Base Radio to the configuration.

Procedure:

1. Remove the Blind Plate where the additional Base Radio is to be added.
2. Label all Rx cables with labels included in the expansion kit.
3. Attach the Rx cables to the filters. Connect them according to the scheme below:

#	Part no	Cable type	Label	From	To
15	3066543B02	RX cable	Rx1	Filter 1 / BR#	BR# / Rx1
16			Rx2	Filter 2/ BR#	BR# / Rx2
17			Rx3	Filter 3/ BR#	BR# / Rx3

NOTICE: If Base Radio to be added is BR2, replace BR# with BR2 i table above, and so on.

NOTICE: Index numbers in table above refer to cable connections shown in Cable Connections on page 454.

NOTICE: At this stage only connect the cables to the filters.

4. Attach the Tx cable to the Tx input of the Cavity Combiner according to the scheme below:

#	Note	Part no	Cable type	From	To
11	If BR2	3066543B08	Tx cable	CC1 / TxB	BR2 / Tx
12	If BR3	3066543B08	Tx cable	CC2 / TxA	BR3 / Tx
18	If BR4	3066543B08	Tx cable	CC2 / TxB	BR4 / Tx

NOTICE: Index numbers in table above refer to cable connections shown in Cable Connections on page 454.

NOTICE: At this stage only connect the cable to the Cavity Combiner (ATCC or MTCC).

5. Attach the Ethernet cable to the appropriate BR input of the Site Controller according to the scheme below:

#	Note	Part no	Cable type	From	To
2	If BR2	3066544B02	Ethernet cable	BR2 / SC1	SC1 / BR2
6	If BR3	3066544B04	Ethernet cable	BR3 / SC1	SC1 / BR3
11	If BR4	3066544B05	Ethernet cable	BR4 / SC1	SC1 / BR4

NOTICE: Index numbers in table above refer to cable connections shown in Cable Connections on page 454.

NOTICE: At this stage only connect the cable to the Site Controller.

NOTICE: If the Ethernet cable is being wired from a Base Radio in one Module Cage to a Site Controller in another Module Cage, the Ethernet cable is to be drawn outside of the Module Cage.

6 Insert the additional Base Radio by aligning the side rails with the appropriate rail guides inside the Base Radio chassis.

7 Gently push the additional module completely into the Base Radio chassis assembly using the module handle(s). Be careful not to damage any of the cables previously connected when pushing the Base Radio into position.

8 Secure the additional module using two TORX screws. Tighten the screws to a torque of 2.7 Nm.

9 Connect the Power cables, Ethernet cable, Tx cable and Rx cables to the BR front plate.

NOTICE: If single or dual diversity, use QMA terminator (2866544A01) in unused Rx connectors on Base Radio(s).

10 Switch ON the Power Supply Unit. You do not need to do this if doing a hotswap.

15.3.3
Configuration

Basic configuration of base radios is needed when additional base radio(s) has been added to the MTS 4 cabinet. This is described in Configuring and Verifying the Base Radio on page 251.

NOTICE:
Base radios in the second Module Cage should be configured with ***<cabinet>:<position>*** set as `1:3` and `1:4`.

NOTICE: For configurations with Manual Tuned Cavity Combiner(s), the MTCC needs to be tuned after adding additional Base Radio.

In addition to this, the following parameters need to be configured in TESS application:

- Factory password
- Field password
- Cabinet ID
- Position ID
- Carrier Number (TX/RX frequencies are auto-generated based on Carrier Number setting)
- Default TX Power level

NOTICE: When these parameters have been configured in TESS Application and after the modified configuration file has been uploaded to the Site Controller, the complete site needs to be reset to implement the configuration change.

15.4
Redundant Site Controller

It is possible to add an additional (redundant) Site Controller to MTS 4. To add a redundant Site Controller, two module cages must be present in the MTS 4.

NOTICE: If a redundant Site Controller is added to an MTS with an expansion cabinet, a redundant XHUB must also be added.

NOTICE:
Redundant Site Controller feature is supported on releases:

- R6.0_001.12, MTS 05
- R5.2_002.34, MTS 10

and later.

The additional Site Controller is delivered with the expansion kit that includes required equipment and cables.

15.4.1
Adding a Redundant Site Controller

This section described how to install and configure an additional Site Controller, gaining Redundant Site Controller functionality.

CAUTION: You must be familiar with Man-Machine Interface (MMI) commands and their usage before performing procedures in this chapter. An improper application of the MMI commands can damage the equipment.

IMPORTANT:
Disable your Firewall application before attempting to transfer files.

The MTS Site Controller has the following modes of operation:

- **BOOT1** – to access this mode interrupt the booting process by pressing **Escape** key or **Control+C** combination when appropriate message is shown. A password may be required to enter this mode.
- **Test Application** – to access this mode enter the `testapp` command when in BOOT1 mode. To go back to normal Site Controller Application enter reset `-oplatform` command to reboot and resume normal operation.
- **Site Controller Application** – if the boot process is not interrupted, this is the default mode of operation.

NOTICE: When adding an additional (redundant) Site Controller, there will be some service downtime while making physical modifications.

Process:

1. Back up the Site Controller configuration of the existing Site Controller.

   See the respective restoration manual (DIPS/DIPC/X Core systems) or *Service Manual* (DIPM system) for MTS Configuration Backup procedures.

   NOTICE: This assumes that the existing Site Controller is properly configured and in service.

2. Install second Site Controller.

   See Installing a Second Site Controller on page 463.

3. Restore the Site Controller Software on the second Site Controller.

   See the respective restoration manual (DIPS/DIPC/X Core systems) or *Service Manual* (DIPM system) for details on restoring the Site Controller software.

4. Configure E1 Links on the second Site Controller.

   See the respective restoration manual (DIPS/DIPC/X Core systems) or *Service Manual* (DIPM system) for details on how to configure the E1 links.

5. Configure CAN Bus on the second Site Controller.

For detailed procedures, see the respective restoration manual (DIPS/DIPC/X Core systems) or *Service Manual* (DIPM system).

6 Load Ki's into MTS.

See the respective restoration manual (DIPS/DIPC/X Core systems) or *Service Manual* (DIPM system) for details on loading Ki's Into MTS.

7 Check the MTS post-restoration checks.

For details, see the respective restoration manual (DIPS/DIPC/X Core systems) or *Service Manual* (DIPM system).

IMPORTANT:
When adding a second Site Controller it will automatically become standby meaning that performance of Site Controller post-restoration checks will not be possible.

In order to perform a Site Controller Post-restoration check on the second Site Controller, the first Site Controller needs to be reset allowing the second Site Controller to become active leading to interruption of service for several seconds.

8 Configure Redundant Site Controller feature.

See Configuring Redundant Site Controller on page 464.

15.4.1.1
Installing a Second Site Controller

Procedure:

1 Wear an ESD strap and connect its cable to a verified good ground. This strap must be worn to prevent ESD damage to any components.

2 Remove the Site Controller Blind Plate.

3 Label the cables with labels included in the expansion kit.

4 Connect the Ethernet cables to the Base Radio(s) according to the scheme below:

Part no	Cable type	From	To
3066544B02	Ethernet cable	SC2 / BR4	BR4 / SC2
3066544B15	Ethernet cable	SC2 / BR1	BR1 / SC2
3066544B16	Ethernet cable	SC2 / BR2	BR2 / SC2
3066544B01	Ethernet cable	SC2 / BR3	BR3 / SC2

NOTICE: At this stage only connect the cables to the Base Radios.

5 Strap the cables. Connect RF cable 3066543B10 to the GPS2 connector on the Junction Panel and let it hang. Catch the cable in the empty space where the Site Controller is to be assembled and temporarily fix it at the front.

6 Install the Site Controller. Use the handle to slide the unit into the chassis.

IMPORTANT: Connect the ribbon cables at the rear before sliding the unit into the chassis. Be careful not to damage the cables when sliding the Site Controller into place.

7 Secure the Site Controller in the chassis with two M4X10 captive screws.

8 Connect the Ethernet cables previously attached to the Base Radio(s) to the Site Controller. Also connect the newly added Site Controller to the junction panel according to the scheme below:

Part no	Cable type	From	To
3066543B10	RF Cable	Junction Panel / E1	Y splitter
3066560B01		Y splitter	SC1 / E1
3066567B02		Y splitter	SC2 / E1

9 Connect RF cable 3066543B10 to GPS connector.

10 Connect the redundant control signal cable according to the scheme below:

Part no	Cable type	From	To
3066544B17	Redundant CTRL signal cable	SC1 / RedIn	SC2 / RedOut
3066544B17	Redundant CTRL signal cable	SC1 / RedOut	SC2 / RedIn

NOTICE: Make sure to follow the color indications on both the cables as well as on the Site CONTROLLER.

11 Remove the Terminator from the CAN2 output on the Power Supply Unit and connect the CAN Bus cable according to the scheme below:

Part no	Cable type	From	To
3066544B03	CAN Bus cable	SC2 / CAN	PSU2 / CAN2

12 Connect the power cables to the MTS Power Supply Units.

15.4.2
Configuring Redundant Site Controller

NOTICE: Redundant Site Controller feature is supported by MTS Software releases:

- MTS SPU R5.2_002.34 or later
- MTS SPU R6.0_001.12 or later

NOTICE: On power up of the Standby Site Controller the Base Radios may dekey and reset. Base Radios will automatically recover and key up again within 20 seconds.

Process:

1 Perform Site Controller Hardware Pre-Checks.

See Performing Site Controller Hardware Pre-Checks on page 465.

2 Configure the Site Controller Configuration Files.

See Configuring Site Controller Configuration Files on page 465.

3 Configure Ethernet ports connecting the two Site Controllers.

See Configuring Ethernet Ports on page 465.

4 Configure the ID values of the Site Controllers.

See Configuring Site Controller IDs on page 467.

15.4.2.1
Performing Site Controller Hardware Pre-Checks

Procedure:

1. Ensure that both Site Controllers are correctly installed and are running identical software applications, Boot images and configuration files.
2. In order for the Redundant Site Controller feature to work correctly, the Site Controller and BR Boot1 version must be:
   - TSC_RLJ_BOOT1–R06.40.07 or later for SC.
   - BRC_RLJ_BOOT1–R06.40.05 or later for Base Radio.

   NOTICE: The Boot1 version can be checked on the Site Controller and BRs by resetting the Site Controller/BR and interrupting the startup sequence when prompted to go into Boot1 mode. The software version is displayed when entering Boot1 mode.
3. Check that the redundant Site Controller Ethernet Link cables are connected correctly, as shown in Cable Connections.
4. Proceed to Configuring Site Controller Configuration Files on page 465 below.

15.4.2.2
Configuring Site Controller Configuration Files

NOTICE: To check that the Site Controller configuration files have the Standby Site Controller Installed parameter enabled, follow the steps below.

IMPORTANT: Remember to check the configuration of both Site Controllers.

Procedure:

1. Log onto the Site Controller Application MMI.
2. From the SC: prompt, run the command `display config`.
3. Check the output of the configuration and confirm if the Standby Site Controller parameter is enabled or not.
4. If no Standby Site Controller is enabled, upload the Active Site Controller configuration file.
5. Modify the configuration file in TESS to enable Standby Site Controller.
6. Download the new configuration file to the InActive Bank (set to use as next after reset).
7. Reset the Site Controller.
8. Confirm the configuration is correct.

15.4.2.3
Configuring Ethernet Ports

To ensure that the Redundant Site Controller works correctly, the Ethernet ports used to connect the two Site Controllers need to be properly configured.

NOTICE: The IP addresses for each Site Controller must be different for eth0 and for eth1.

Site Controller 1 (SC1)

- eth0: 10.0.253.1
- eth1: 10.0.254.1

Site Controller 2 (SC2)

- eth0: 10.0.254.2
- eth1: 10.0.253.2

Procedure:

For an MTS using a single Site Controller:

1. Check the Ethernet Settings by using the following command in the SC application prompt: `ifconfig -a`
2. In the output, confirm that the eth0 and eth1 ports are configured correctly.

For single and double Site Controllers, set SC IDs by performing the following steps:

3. During start-up, log on to Boot1 of the Site Controller.
4. In the prompt, enter: `spr inet/if/eth0`
5. In the prompt, enter: `spr inet/if/eth1`
6. Take note of the IP addresses and MAC addresses.
   - If the IP addresses are set correctly, continue to step 10.
   - If the IP addresses are set incorrectly, go to step 7.
7. Log on to Boot1 of the Site Controller.
8. In the prompt, enter:
   `spw inet/if/eth0 "dhcp:no addr:10.0.<third_octet>.<X> mask:255.255.255.0 dev_name:tsec dev_unit:0 ethaddr:<yy:yy:yy:yy:yy:yy> mtu:1500"`

   where:
   - ***<third_octet>*** stands for:
     - SC1: `253`
     - SC2: `254`
   - ***<X>*** stands for:
     - SC1: `1`
     - SC2: `2`
   - ***<yy:yy:yy:yy:yy:yy>*** = is the MAC address of the interface.

   NOTICE:
   eth0 and eth1 have different MAC addresses.

   The IP addresses for each Site Controller must be different for eth0 and for eth1.
9. In the prompt, enter:
   `spw inet/if/eth1 "dhcp:no addr:10.0.<third_octet>.<X> mask:255.255.255.0 dev_name:tsec1 dev_unit:1 ethaddr:<yy:yy:yy:yy:yy:yy> mtu:1500"`

   where:
   - ***<third_octet>*** stands for:
     - SC1: `254`
     - SC2: `253`
   - ***<X>*** stands for:
     - SC1: `1`

- SC2: `2`

- ***<yy:yy:yy:yy:yy:yy>*** = is the MAC address of the interface.

NOTICE:
eth0 and eth1 have different MAC addresses.

The IP addresses for each Site Controller must be different for eth0 and for eth1.

10 Check the IP settings on both SCs.

15.4.2.4
Configuring Site Controller IDs

NOTICE: The Site Controllers must have different ID values configured. To check the SC id, follow the steps below.

Procedure:

1 Log onto the Site Controller Application MMI.

2 From the SC: prompt, run the command `id`.

3 An id value of either A or B is displayed.

4 Perform the same check on the second Site Controller.

5 If the IDs are the same, one of the ID values have to be changed. To do so, log onto the Site Controller Application MMI.

NOTICE: It does not matter if it is the ID value of SC1 or SC2 that is changed, as long as they do not have the same ID value.

6 From the SC: prompt, run the command `id x` where **x** can be either A or B. Make sure to define a value different for the two Site Controllers.

7 Reset the Site Controller.

15.5
Expansion from Two-Channel to Four-Channel Cavity Combiner

It is possible to expand from a two-channel Cavity Combiner to a four-channel Cavity Combiner.

The order of an additional Cavity Combiner is dependent on the type of Cavity Combiner existing in the current configuration of the MTS 4 cabinet. There are type of the Cavity Combiner:

- Auto Tune Cavity Combiner (ATCC)
- Manual Tune Cavity Combiner (MTCC)

NOTICE: The additional Cavity Combiner is delivered with the expansion kit that includes required equipment and cables.

15.5.1

Cable Connections

Figure 205: ATCC Cabling Diagram — MTS 4 with 1 TX Antenna before Expansion

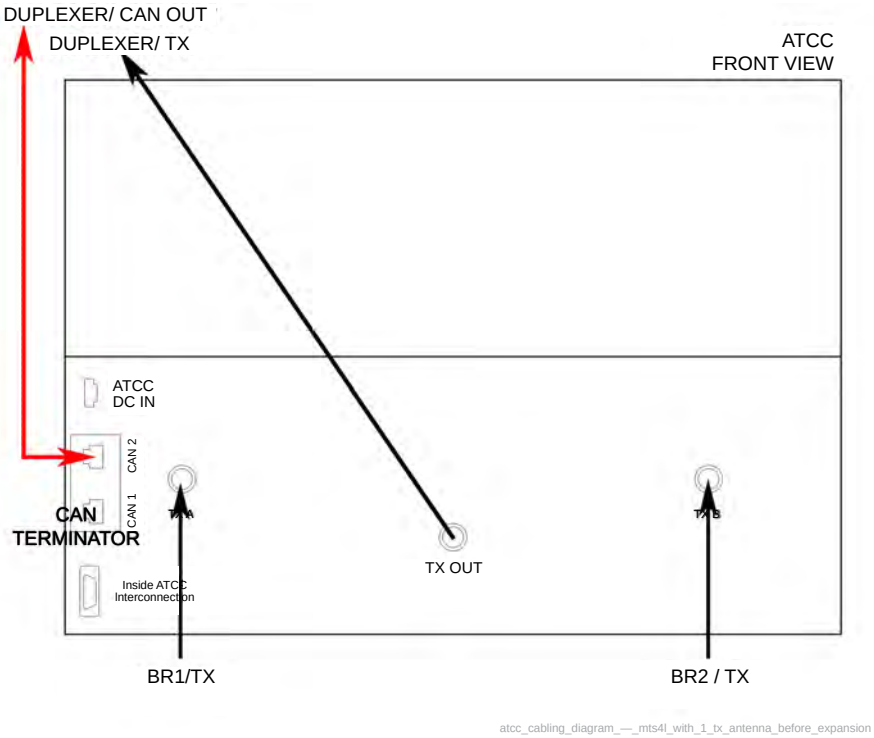

Figure 206: ATCC Cabling Diagram — MTS 4 with 1 TX Antenna after Expansion

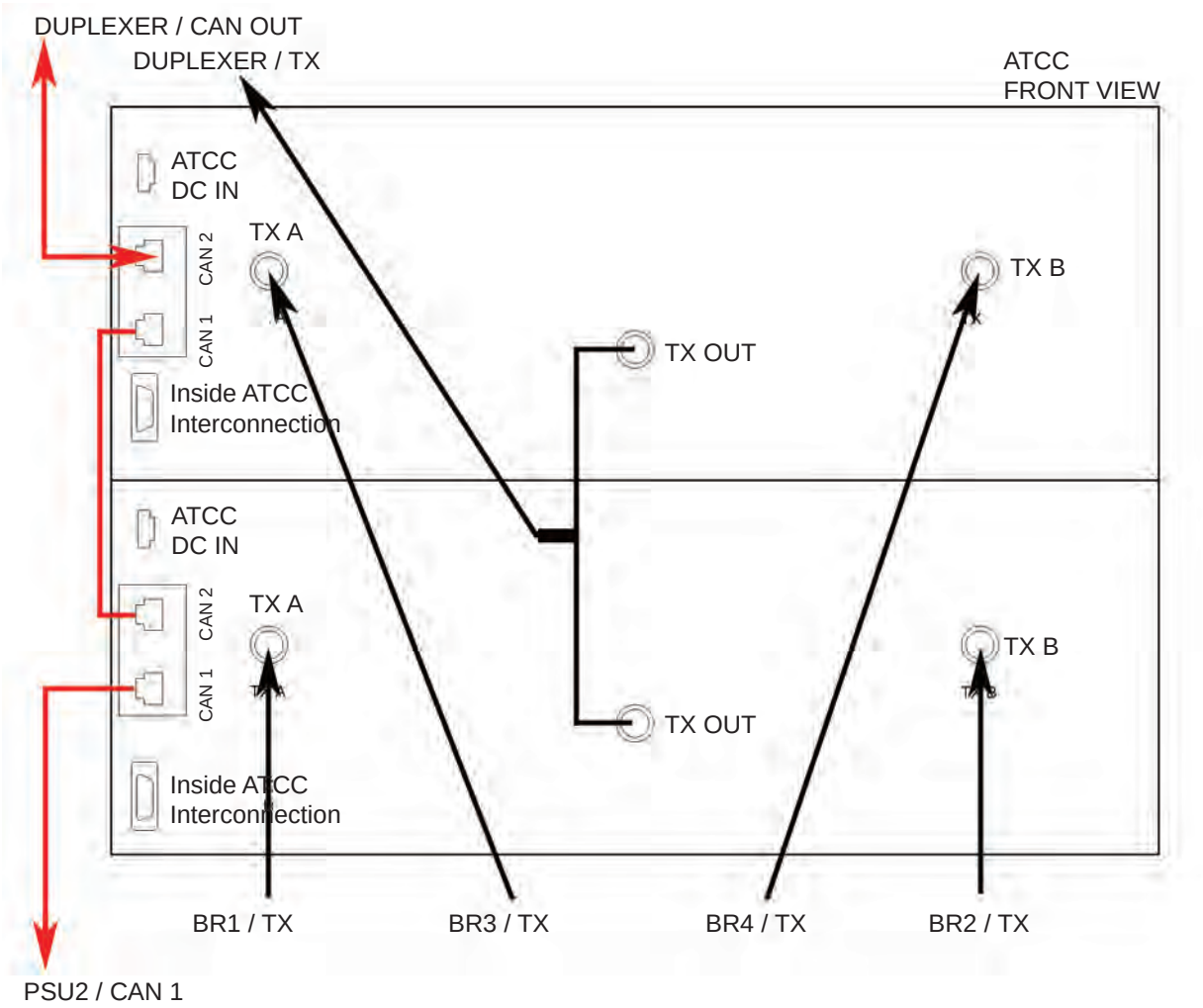

15.5.2

Adding the Four-Channel Cavity Combiner

Follow the process below to install the Cavity Combiner.

NOTICE: Procedure is the same whether it is an Auto Tuned Cavity Combiner (ATCC) or a Manual Tuned Cavity Combiner (MTCC) being installed.

CAUTION: The cavity Combiner can weigh up to 11.8 kg (26 lbs.). Use caution when removing or installing Cavity Combiner into the equipment rack. Make sure the combiner is fully supported when free from mounting rails to avoid injury to personnel and equipment damage.

Process:

1. Install the new Cavity Combiner into the cabinet.

   See Installing the Cavity Combiner into the Cabinet on page 470.

2. Update the mapping list with the new unit TrackID.

   See Updating the Mapping List with the New TrackID on page 308.

15.5.2.1
Installing the Cavity Combiner into the Cabinet

Procedure:

1 Switch OFF the Power Supply Unit.

NOTICE: Only applies for Auto Tuned Cavity Combiner (ATCC).

2 Remove the panel in front of where the additional Cavity Combiner is to be assembled.

3 Assemble bracket with 3 M6x10 screws.

4 Attach the DC cable to DC ATCC Out on the Power Supply Unit. Connect it to the DC socket on the control box on the Cavity Combiner.

NOTICE: Only applies for Auto Tuned Cavity Combiner.

NOTICE: Route the DC cable so it will be placed behind the additional Cavity Combiner.

5 Slide the Cavity Combiner into the cabinet.

6 Fasten the three screws (two on the left and one on the right) that hold the Cavity Combiner onto the brackets of the cabinet.

7 Attach the TX cables to the Base Radios.

8 Unplug the TX cable connected to ATCC 1 / TX Out connector and attach the TX Interconnect Harness to the ATCC 1 / TX Out and ATCC 2 / TX Out connectors. Connect the original cable to the TX Interconnect Harness.

9 Unplug the CAN Bus cable connected to ATCC 1 / CAN2 connector and attach it to ATCC 2 / CAN2 instead.

Action	From	To
Before	Duplexer / CAN Out	ATCC 1 / CAN2
After	Duplexer / CAN Out	ATCC 2 / CAN2

NOTICE: When Manually Tuned Cavity Combiners are used, the CAN Bus is connected directly from Duplexer or PostFilter / CAN2 connector to Power Supply Unit 2 / CAN1 connector.

10 Connect the CAN Bus cable from the existing Cavity Combiner to the new Cavity Combiner according to the scheme below:

Part no	Cable type	From	To
3066544B09	CAN Bus cable	ATCC 1 / CAN2	ATCC 2 / CAN1
3066544B06	CAN Bus cable	ATCC 1 / CAN1	PSU2 / CAN1

NOTICE: If a terminator is situated in the ATCC 1 / CAN1 connector before cabling according to scheme above, the terminator is removed.

11 Switch ON the Power Supply Unit.

15.5.3
Configuration

When the new Cavity Combiner has been installed, the mapping list needs to be updated with the new TrackID. For more information, see Updating the Mapping List with the New TrackID on page 308.

15.6
Hybrid Combiner Expansion

It is possible to expand the MTS 4 with additional Hybrid Combiner.

NOTICE: The additional Hybrid Combiner is delivered with the expansion kit that includes required equipment and cables.

15.6.1
Installing an additional Hybrid Combiner

Follow the instructions below to install the additional Hybrid Combiner.

Procedure:

1. Switch OFF the Power Supply Unit.
2. Assemble the Bracket with the three M6x10 screws.
3. Fasten the two M4x10 screws that are to hold the Hybrid Combiner but do not tighten them fully.
4. Place the Hybrid Combiner on the bracket of the cabinet with the heat sink facing the side of the cabinet.
5. Slide the Hybrid Combiner at an angle ensuring that the lip at the back of the Hybrid Combiner is secured behind the bracket.
6. Tighten the two M4x10 screws to the bracket.
7. Attach the TX and antenna cables.
8. Switch ON the Power Supply Unit.

15.6.2
Configuration

No further configuration is needed when having installed the Hybrid Combiner.

15.7
Expansion from MTS 2 to MTS 4 Cabinet

It is possible to expand from an existing MTS 2 to MTS 4.

NOTICE: When expanding from MTS 2 to MTS 4, an additional Base Radio is delivered with the expansion kit that includes required equipment and cables.

15.7.1
Expanding from MTS 2 to MTS 4

Follow the process below to extract the Module Cage from MTS 2 and assemble it into the expanding MTS 4 Cabinet.

Process:

1. Extract the Module Cage from MTS 2, see Extracting the Module Cage from MTS 2 on page 472.
2. Assemble the Module Cage in the MTS 4 cabinet, see Assembling the Module Cage in the MTS 4 Cabinet on page 474

15.7.1.1
Extracting the Module Cage from MTS 2

Procedure:

1. Remove all RF cables (RX, TX, and GPS if mounted).
2. Disconnect all cables between the module cage and the Junction Panel.
3. Remove any CAN Bus cables going to and from the Filter(s).
4. Remove the filter section by:
   - Removing 6 pcs. M4 screws using TORX20.
   - Remove the special Ground screw using a normal screw driver.

NOTICE: Filter modules need to be removed in order to have access.

NOTICE: The Ground screw should be reattached after removal of the filter section.

Figure 207: M4 Screw Position

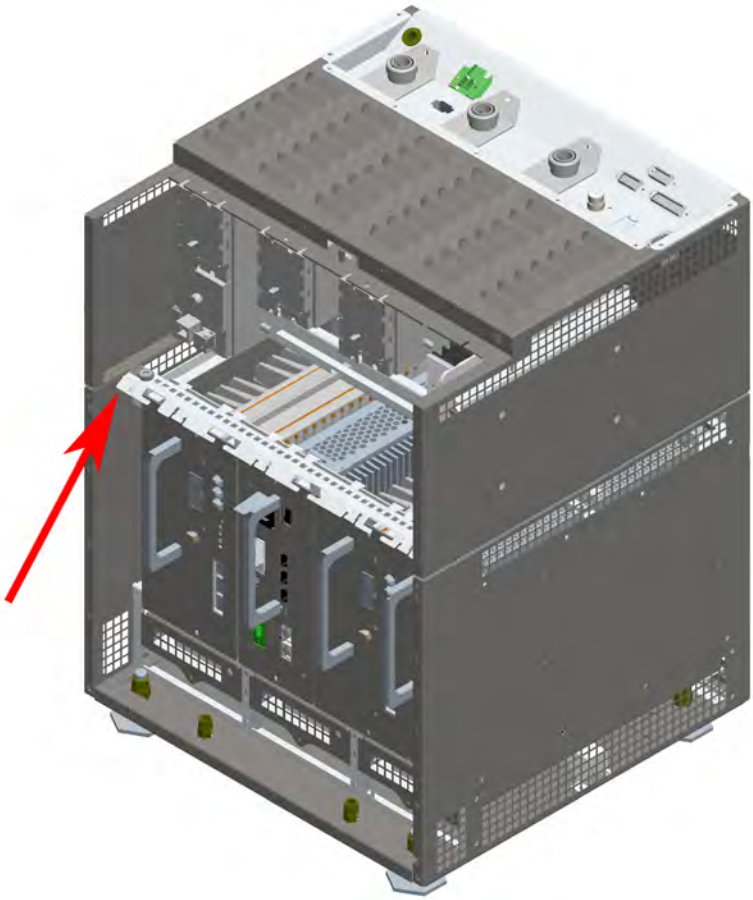

5 Remove bottom plate by removing the 20 pcs M3 TEXTRON screws using M1.5 Hex.

Figure 208: M3 Screw position

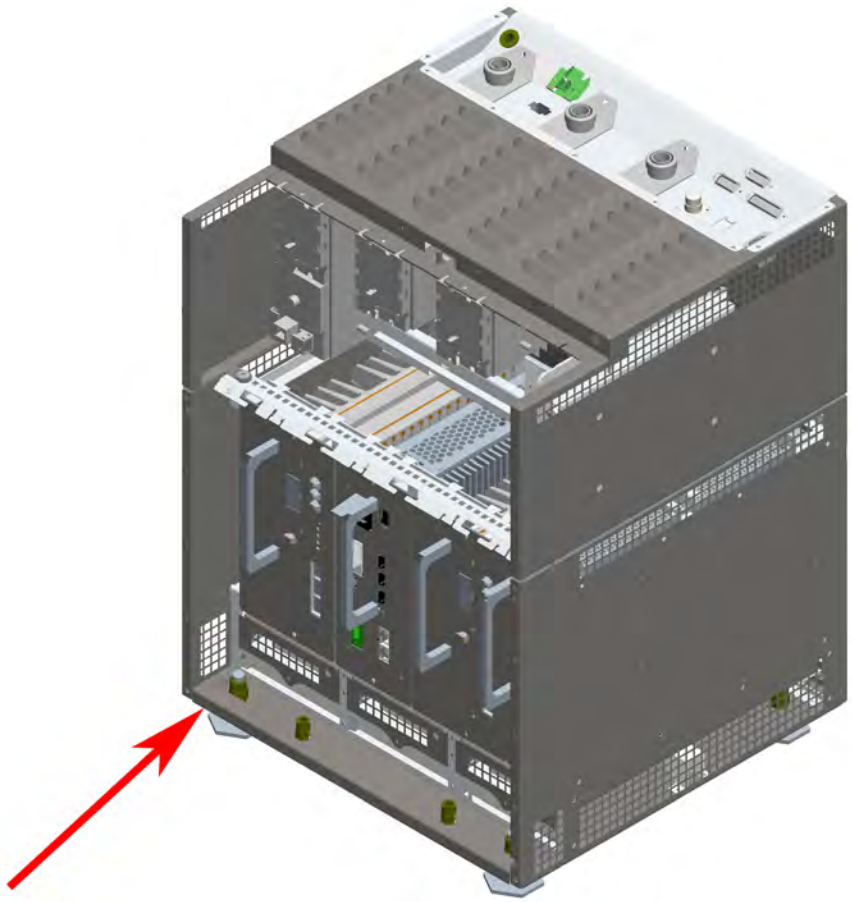

6 Remove the Ribbon cable from the Module cage.
7 Mount the two brackets to the Module cage using 10 pcs. M4 screws.
8 Bend in the area at the back of the Module Cages for Ribbon cables to be routed through later.

15.7.1.2
Assembling the Module Cage in the MTS 4 Cabinet

Procedure:

1 Remove the Module Cage Beauty Plate (if any).
2 Mount all cables going from the lower Module Cage in your specific configuration and fix them temporarily in the rack before mounting the air separator shelf and module cage.

NOTICE: This would typically be:

- Ethernet cables from Base Radio(s) in lower Module Cage to SC in upper Module Cage (SC2).
- Ethernet cables from Base Radio(s) in upper Module Cage to SC in lower Module Cage (SC1).
- CAN Bus cables to and from Filters.

3 Assemble the Air Separator shelf above the existing Module Cage using four M6 screws.

4 Assemble the Module Cage extracted from MTS 2 in Extracting the Module Cage from MTS 2 on page 472.

NOTICE: For more information regarding assembling of a module cage in the MTS 4 Cabinet, see Adding Additional Module Cage to MTS 4.

5 Connect the power supply cables and optional backup battery cables.

6 Connect the Ethernet cables and CAN Bus cables mounted in Step 2 above.

7 Switch ON the Power Supply Unit.

8 Check the LED indicators to verify the PSU is operating correctly.

15.7.2
Configuration

No configuration in itself is needed for the module cage, but the Power Supply Unit needs to be configured and this is described in Updating the Mapping List with the New PSU TrackID on page 365.

Installation and configuration of additional Base Radios are described separately in Additional Base Radio for Existing Module Cage in MTS 4 on page 453.

Furthermore, if an additional Site Controller is ordered as a separate expansion kit, it needs to be installed and configured, see Redundant Site Controller on page 461.

15.8
Redundant XHUB Controller

It is possible to add an redundant XHUB Controller to an MTS 4 Expansion Cabinet.

NOTICE: In order to be able to expand to a redundant XHUB Controller, a redundant Site Controller **must** be present in the MTS 4 Prime Cabinet.

The additional XHUB Controller is delivered with the expansion kit that includes required equipment and cables.

15.8.1
Adding a Redundant XHUB Controller

Procedure:

1 Wear an ESD strap and connect its cable to a verified good ground. This strap must be worn to prevent ESD damage to any components.

2 Remove XHUB Controller blind plate if such exist in the upper module cage of the MTS 4 Expansion Cabinet.

3 Label the cables with labels included in the expansion kit.

4 Connect the Ethernet cables to the Base Radio(s) according to the scheme below:

Part no	Cable type	From	To
3066544B02	Ethernet cable	BR4 / SC2	XHUB2 / BR4
3066544B15	Ethernet cable	BR1 / SC2	XHUB2 / BR1
3066544B16	Ethernet cable	BR2 / SC2	XHUB2 / BR2
3066544B01	Ethernet cable	BR3 / SC2	XHUB2 / BR3

NOTICE:
Ethernet cables stated above derives from the Base Radio(s) in the MTS 4 Expansion Cabinet.

At this stage only connect the cables to the Base Radio(s).

5 Strap the cables.

6 Install the additional XHUB Controller. Use handle to slide the unit into the chassis.

IMPORTANT: Connect the ribbon cables at the rear before sliding the unit in to the chassis.

7 Secure the XHUB Controller in the chassis with two M4X10 captive screws.

8 Connect the Ethernet cables to the unit as tagged earlier.

9 Connect the 3066544B12 cable that derives from the upper Site Controller in the MTS 4 Prime Cabinet (Exp Cab connector).

10 Reconnect the power cables to the MTS Power Supply Units.

NOTICE: If prime MTS4 is configured with Ethernet site link (Link1 Link2 RJ45 connector at prime rack junction panel are assy), connect cable 30015009004 (black plug) to lower XHUB connector ‘AUX1’. Use the RJ45 coupler 3066562B01 to connect the other side of 30015009004 cable from MTS4 Expansion to MTS4 prime cable 30015009003 (going to ‘Link2’ junction panel connector).

15.8.2
Configuration

No configuration is needed.

Chapter 16

MTS 4 Outdoor Enclosure

The MTS 4 outdoor enclosure is designed to accommodate an MTS 4 base station and it is designed to withstand rough environment and many years of service. Basis is a welded steel frame with dismountable side panels with protected double gaskets for protecting the sealed environment inside.

The MTS 4 outdoor enclosure is described in detail in *MTS 4 Outdoor Enclosure*.

Appendix A

Field Replaceable Units (FRUs)

A.1
Field Replaceable Units for MTS LiTE

Table 141: Available FRUs for MTS LiTE on page 478 lists the available Field Replaceable Units (FRUs) for MTS LiTE and Table 142: Other FRUs for MTS LiTE Available from After Market Operations (AMO) on page 478 lists the other FRUs for MTS LiTE available from After Market Operations (AMO).

Table 141: Available FRUs for MTS LiTE

FRU	Description
GMCN4737A	Site Controller
GMTX4325A	High Power Base Radio 350 – 380 MHz, TEDS compatible
GMTF4690A	High Power Base Radio 806 – 870 MHz, TEDS compatible
GMTX4333A	High Power Base Radio 380 – 470 MHz, TEDS compatible
GMTX4334A	Low Power Base Radio 380 – 470 MHz, TEDS compatible
WAPN4335A	Power Supply Unit
FRUs for BR-Arch-2 Base Radios (supported for SER releases 8.0 and above)	
GMTX4335A	High-Low Power Base Radio 320 - 400 MHz
GMTX4336A	High-Low Power Base Radio 380 - 470 MHz
GMTF4695A	High-Low Power Base Radio 800 MHz

Table 142: Other FRUs for MTS LiTE Available from After Market Operations (AMO)

Part Number	Description
WALN4381A	Fan kit
9166516A01	Low Power Duplexer 351 MHz – 356 MHz
9166516A02	Low Power Duplexer 353 MHz – 358 MHz
9166516A03	Low Power Duplexer 372 MHz – 377 MHz
9166516A04	Low Power Duplexer 374 MHz – 379 MHz
9166516A05	Duplexer Rx 380 MHz – 385 MHz
9166516A06	Duplexer Rx 382,5 MHz – 387,5 MHz
9166516A07	Duplexer Rx 385 MHz – 390 MHz
9166516A15	Duplexer Rx 395 MHz – 400 MHz
9166516A08	Duplexer Rx 410 MHz – 415 MHz
9166516A09	Duplexer Rx 412.5 MHz – 417.5 MHz

Part Number	Description
9166516A10	Duplexer Rx 415 MHz – 420 MHz
9166516A11	Duplexer Rx 450 MHz – 455 MHz
9166516A12	Duplexer Rx 455 MHz - 460 MHz
9166516A13	Duplexer Rx 452.5 MHz - 457.5 MHz
9166516A14	Duplexer MTS2 RX 851 MHz – 870 MHz
9166515A01	Low Power Pre Selector 351 MHz – 356 MHz
9166515A02	Low Power Pre Selector 353 MHz – 358 MHz
9166515A03	Low Power Pre Selector 372 MHz – 377 MHz
9166515A04	Low Power Pre Selector 374 MHz – 379 MHz
9166515A05	Pre Selector Rx 380 MHz – 385 MHz MTS 2
9166515A06	Pre Selector Rx 382.5 MHz – 387.5 MHz MTS 2
9166515A07	Pre Selector Rx 385 MHz – 390 MHz MTS 2
9166515A15	Pre Selector Rx 395 MHz - 400 MHz
9166515A08	Pre Selector Rx 410 MHz – 415 MHz MTS 2
9166515A09	Pre Selector Rx 412.5 MHz – 417.5 MHz MTS 2
9166515A10	Pre Selector Rx 415 MHz – 420 MHz MTS 2
9166515A11	Pre Selector Rx 450 MHz – 455 MHz MTS 2
9166515A12	Pre Selector Rx 455 MHz - 460 MHz
9166515A13	Pre Selector Rx 452.5 MHz - 457.5 MHz
9166515A14	Pre Selector MTS2 RX 806 MHz - 825 MHz
PMUG1017A	Remote GNSS Receiver/Antenna
GMDN5007A	GPS Antenna (Internal GPS Receiver), Post Mount N Male Con
3066564B01	REMOTE GPS CABLE 40 m
3066564B02	REMOTE GPS CABLE 150 m
3066564B03	REMOTE GPS CABLE 600 m
5185151Y02	Site Controller Lithium Battery
01015026001	STANDARD FLOOR MOUNT SET MTS
GMKN4747A	Ethernet Site Link Retrofit Kit MTS2

Figure 209: Position of Modules in MTS LiTE Cabinet

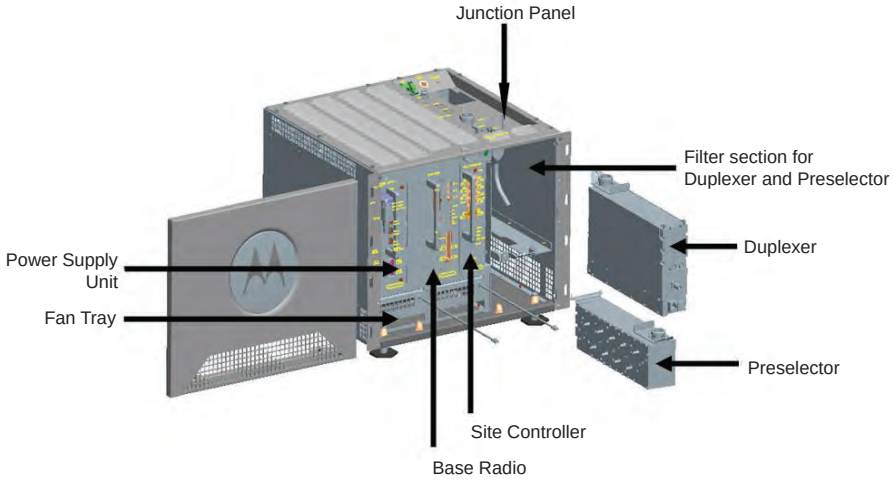

A.2

Field Replaceable Units for MTS 2

Table 143: Available FRUs for MTS 2 on page 480 lists the available Field Replaceable Units (FRUs) for MTS 2 and Table 144: Other FRUs for MTS 2 Available from After Market Operations (AMO) on page 480 lists the other FRUs for MTS 2 available from After Market Operations (AMO).

IMPORTANT: If the MTS 2 is already pre-wired for the second BR, order the BR FRU only. If the MTS 2 is not pre-wired for the second BR, an expansion BR kit is required.

Table 143: Available FRUs for MTS 2

FRU	Description
GMCN4737A	Site Controller
GMTX4325A	High Power Base Radio 350 – 380 MHz, TEDS compatible
GMTF4690A	High Power Base Radio 806 – 870 MHz, TEDS compatible
GMTX4333A	High Power Base Radio 380 – 470 MHz, TEDS compatible
GMTX4334A	Low Power Base Radio 380 – 470 MHz, TEDS compatible
GMWD4513A	Low Power Base Radio 260 MHz – 275 MHz
WAPN4335A	Power Supply Unit
GMLN4752B	DIMETRA Express Server with Trusted Platform Module (TPM)
FRUs for BR-Arch-2 Base Radios (supported for SER releases 8.0 and above)	
GMTX4335A	High-Low Power Base Radio 320 - 400 MHz
GMTX4336A	High-Low Power Base Radio 380 - 470 MHz

Table 144: Other FRUs for MTS 2 Available from After Market Operations (AMO)

Part Number	Description
WATX4379A	Hybrid Combiner 400 MHz

Part Number	Description
WATF4380A	Hybrid Combiner TX 851 MHz – 870 MHz
GMLD4641A	Hybrid Combiner 260 MHz – 275 MHz
GMLF4711A	Hybrid Combiner 932 MHz – 942 MHz
WALN4381A	Fan kit
9166516A07	Duplexer Rx 385 MHz - 390 MHz
9166516A15	Duplexer Rx 395 MHz – 400 MHz
9166516A08	Duplexer Rx 410 MHz - 415 MHz
9166516A09	Duplexer Rx 412.5 MHz – 417.5 MHz
9166516A10	Duplexer Rx 415 MHz – 420 MHz
9166516A11	Duplexer Rx 450 MHz – 455 MHz
9166516A12	Duplexer Rx 455 MHz - 460 MHz
9166516A13	Duplexer Rx 452.5 MHz - 457.5 MHz
9166516A01	Duplexer Rx 351 MHz – 356 MHz
9166516A02	Duplexer Rx 353 MHz – 358 MHz
9166516A03	Duplexer Rx 372 MHz – 377 MHz
9166516A04	Duplexer Rx 374 MHz – 379 MHz
9166516A05	Duplexer Rx 380 MHz – 385 MHz
9166516A06	Duplexer Rx 382.5 MHz – 387.5 MHz
91015003001	Duplexer (Hi Pwr) Rx 260 MHz – 266 MHz
91015006001	Duplexer (Lo Pwr) Rx 260 MHz – 266 MHz
9166516A14	Duplexer MTS2 RX 806 MHz – 825 MHz
9166516A16	Duplexer Rx 917 MHz – 922 MHz
9166516A17	Duplexer Rx 922 MHz – 927 MHz
9166515A01	Pre Selector Rx 351 MHz – 356 MHz
9166515A02	Pre Selector Rx 353 MHz – 358 MHz
9166515A03	Pre Selector Rx 372 MHz – 377 MHz
9166515A04	Pre Selector Rx 374 MHz – 379 MHz
9166515A05	Pre Selector Rx 380 MHz – 385 MHz MTS 2
9166515A06	Pre Selector Rx 382.5 MHz – 387.5 MHz MTS 2
9166515A07	Pre Selector Rx 385 MHz – 390 MHz MTS 2
9166515A15	Pre Selector Rx 395 MHz - 400 MHz
9166515A08	Pre Selector Rx 410 MHz – 415 MHz MTS 2
9166515A09	Pre Selector Rx 412.5 MHz – 417.5 MHz MTS 2
9166515A10	Pre Selector Rx 415 MHz – 420 MHz MTS 2
9166515A11	Pre Selector Rx 450 MHz – 455 MHz MTS 2
9166515A12	Pre Selector Rx 455 MHz - 460 MHz
9166515A13	Pre Selector Rx 452.5 MHz - 457.5 MHz

Part Number	Description
91015004001	Pre Selector (Hi Pwr) Rx 260 MHz – 266 MHz
91015007001	Pre Selector (Low Pwr) Rx 260 MHz – 266 MHz
9166515A14	Pre Selector MTS2 RX 806 MHz – 825 MHz
9166515A16	Pre Selector Rx 917 MHz – 922 MHz
9166515A17	Pre Selector Rx 922 MHz - 927 MHz
GMDN1172A	Remote GPS Antenna MOBRA ROHS Compliant (GPS RF Antenna with integrated GPS Receiver)
GMDN5007A	GPS Antenna (Internal GPS Receiver), Post Mount N Male Con
3066564B01	REMOTE GPS CABLE 40 m
3066564B02	REMOTE GPS CABLE 150 m
3066564B03	REMOTE GPS CABLE 600 m
5185151Y02	Site Controller Lithium Battery
01015026001	STANDARD FLOOR MOUNT SET MTS
GMDN2206A	MTS2 LVD RELAY RETROFIT KIT
GMKN4747A	Ethernet Site Link Retrofit Kit MTS2

Figure 210: Position of Modules in MTS 2 Cabinet

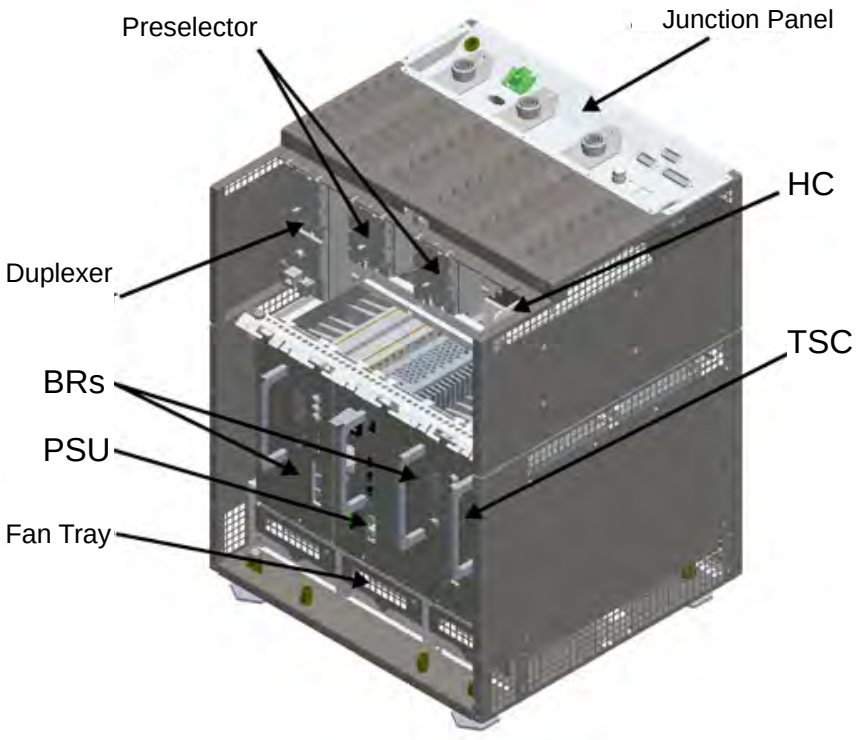

A.3

Field Replaceable Units for MTS 4

Table 145: Available FRUs for MTS 4 on page 483 lists the available FRUs for MTS 4 and Table 146: Other Field Replaceable Units for MTS 4 Available from After Market Operations (AMO) on page 483 lists other FRUs for MTS 4 available from AMO.

IMPORTANT: If the MTS 4 is already pre-wired for the second BR, order the BR FRU only. If the MTS 4 is not pre-wired for the second BR, an expansion BR kit is required.

Table 145: Available FRUs for MTS 4

FRU	Description
GMCN4737A	Site Controller
GMTX4325A	High Power Base Radio 350 – 380 MHz, TEDS compatible
GMTF4690A	High Power Base Radio 806 – 870 MHz, TEDS compatible
GMTX4333A	High Power Base Radio 380 – 470 MHz, TEDS compatible
GMTX4334A	Low Power Base Radio 380 – 470 MHz, TEDS compatible
GMWD4513A	Low Power Base Radio 260 MHz – 275 MHz
WAPN4335A	Power Supply Unit
GMLN4752B	DIMETRA Express Server with Trusted Platform Module (TPM)
FRUs for BR-Arch-2 Base Radios (supported for SER releases 8.0 and above)	
GMTX4335A	High-Low Power Base Radio 320 - 400 MHz
GMTX4336A	High-Low Power Base Radio 380 - 470 MHz

Table 146: Other Field Replaceable Units for MTS 4 Available from After Market Operations (AMO)

Part Number	Description
WATX4379A	Hybrid Combiner 400 MHz
GMLD4641A	Hybrid Combiner 260 MHz – 275 MHz
WATF4380A	Hybrid Combiner TX 851 MHz – 870 MHz
WALN4381A	Fan kit
GMDN1172A	Remote GPS Antenna MOBRA ROHS Compliant (GPS RF Antenna with integrated GPS Receiver)
GMDN5007A	GPS Antenna (Internal GPS Receiver), Post Mount N Male Con
9166519A05	MTCC (2 chan.) 360 MHz – 370 MHz
9166519A06	MTCC (2 chan.) 380 MHz – 400 MHz
9166519A07	MTCC (2 chan.) 410 MHz – 433 MHz
9166519A08	MTCC (2 chan.) 460 MHz – 470 MHz
9166519A09	MTCC (2 chan.) TX 851 MHz – 870 MHz
9166519A01	ATCC (2 chan.) 360 MHz – 370 MHz
9166519A02	ATCC (2 chan.) 380 MHz – 400 MHz

Part Number	Description
9166519A03	ATCC (2 chan.) 410 MHz – 430 MHz
9166519A04	ATCC (2 chan.) 460 MHz – 470 MHz
91015008001	ATCC (2 chan.) 260 MHz – 275 MHz
9166519A10	ATCC (2 chan.) TX 851 MHz – 870 MHz
9166512B17	Duplexer Rx 351 MHz – 356 MHz (supplier Fungu) Replaces Power Wave 9166512A17 duplexer.
9166512B18	Duplexer Rx 353 MHz – 358 MHz (supplier Fungu) Replaces Power Wave 9166512A18 duplexer.
9166512B19	Duplexer Rx 372 MHz – 377 MHz (supplier Fungu) Replaces Power Wave 9166512A19 duplexer.
9166512B20	Duplexer Rx 374 MHz – 379 MHz (supplier Fungu) Replaces Power Wave 9166512A20 duplexer.
9166512B01	Duplexer Rx 380 MHz – 385 MHz (supplier Fungu) Replaces Power Wave 9166512A01 duplexer.
9166512B02	Duplexer Rx 382.5 MHz – 387.5 MHz (supplier Fingu). Replaces Power Wave 9166512A02 duplexer.
9166512B03	Duplexer Rx 385 MHz – 390 MHz (supplier Fungu) Replaces Power Wave 9166512B03 duplexer.
9166512B10	Duplexer Rx 410 MHz – 415 MHz (supplier Fungu) Replaces Power Wave 9166512A10 duplexer.
9166512B11	Duplexer Rx 412.5 MHz – 417.5 MHz (supplier Fungu) Replaces Power Wave 9166512A11 duplexer.
9166512B12	Duplexer Rx 415 MHz – 420 MHz (supplier Fungu) Replaces Power Wave 9166512A12 duplexer.
9166512B14	Duplexer Rx 450 MHz – 455 MHz (supplier Fungu) Replaces Power Wave 9166512A14 duplexer.
9166512B15	Duplexer Rx 452.5 MHz – 457.5 MHz
9166512B16	Duplexer Rx 455 MHz – 460 MHz
91015003001	Duplexer (Hi Pwr) 260 MHz – 266 MHz
91015006001	Duplexer (Lo Pwr) 260 MHz – 266 MHz
9166512B21	Duplexer MTS4 RX 806 MHz – 825 MHz (supplier Fungu) Replaces Power Wave 9166512A21 duplexer.
9166511B17	Post Filter Tx 361 MHz – 366 MHz (supplier Fingu) Replaces Power Wave 9166511A17 filter.
9166511B18	Post Filter Tx 363 MHz – 368 MHz (supplier Fingu)

Part Number	Description
	Replaces Power Wave 9166511A18 filter.
9166511B19	Post Filter Tx 382 MHz – 387 MHz (supplier Fingu) Replaces Power Wave 9166511A19 filter.
9166511B20	Post Filter Tx 384 MHz – 389 MHz (supplier Fingu) Replaces Power Wave 9166511A20 filter.
9166511B01	Post Filter Tx 390 MHz – 395 MHz (supplier Fingu) Replaces Power Wave 9166511A01 filter.
9166511B02	Post Filter Tx 392.5 MHz – 397.5 MHz (supplier Fingu) Replaces Power Wave 9166511A02 filter.
9166511B03	Post Filter Tx 395 MHz – 400 MHz (supplier Fingu) Replaces Power Wave 9166511A03 filter.
9166511B10	Post Filter Tx 420 MHz – 425 MHz (supplier Fingu) Replaces Power Wave 9166511A10 filter.
9166511B11	Post Filter Tx 422.5 MHz – 427.5 MHz (supplier Fingu) Replaces Power Wave 9166511A11 filter.
9166511B12	Post Filter Tx 425 MHz – 430 MHz (supplier Fingu) Replaces Power Wave 9166511A12 filter.
9166511B14	Post Filter Tx 460 MHz – 465 MHz (supplier Fingu) Replaces Power Wave 9166511A14 filter.
9166511B15	Post Filter Tx 462.5 MHz – 467.5 MHz
9166511B16	Post Filter Tx 465 MHz – 470 MHz
91015005001	Post Filter (Hi Pwr) Tx 269 MHz – 275 MHz
9166511B21	Post Filter MTS4 TX 851 MHz – 870 MHz
9166510B01	Pre Selector Rx 380 MHz – 385 MHz MTS 4 (supplier Fingu) Replaces Power Wave 9166510A01 filter.
9166510B02	Pre Selector Rx 382,5 MHz – 387,5 MHz MTS 4 (supplier Fingu). Replaces Power Wave 9166510A02 filter.
9166510B03	Pre Selector Rx 385 MHz – 390 MHz MTS 4 (supplier Fingu) Replaces Power Wave 9166510A03 filter.
9166510B10	Pre Selector Rx 410 MHz – 415 MHz MTS 4 (supplier Fingu) Replaces Power Wave 9166510A10 filter.
9166510B11	Pre Selector Rx 412.5 MHz – 417.5 MHz MTS 4 (supplier Fingu) Replaces Power Wave 9166510A11 filter.
9166510B12	Pre Selector Rx 415 MHz – 420 MHz MTS 4 (supplier Fingu)

Part Number	Description
	Replaces Power Wave 9166510A12 filter.
9166510B20	Pre Selector Rx 351MHz 356 MHz MTS 4 (supplier Fingu) Replaces Power Wave 9166510A20 filter.
9166510B21	Pre Selector Rx 353 MHz – 358 MHz MTS 4 (supplier Fingu) Replaces Power Wave 9166510A21 filter.
9166510B22	Pre Selector Rx 372 MHz – 377 MHz MTS 4 (supplier Fingu) Replaces Power Wave 9166510A22 filter.
9166510B23	Pre Selector Rx 374 MHz – 379 MHz MTS 4 (supplier Fingu) Replaces Power Wave 9166510A23 filter.
9166510B17	Pre Selector Rx 450 MHz – 455 MHz MTS 4 (supplier Fingu) Replaces Power Wave 9166510A17 filter.
9166510B18	Pre Selector Rx 452.5 MHz – 457.5 MHz MTS4
9166510B19	Pre Selector Rx 455 MHz – 460 MHz MTS4
91015004001	Pre Selector (Hi Pwr) 260 MHz – 266 MHz
91015007001	Pre Selector (Lo Pwr) 260 MHz – 266 MHz
9166510B24	Pre Selector MTS4 RX 806 MHz – 825 MHz (supplier Fingu) Replaces Power Wave 9166510A24 filter.
5185151Y02	Site Controller Lithium Battery
01015026001	STANDARD FLOOR MOUNT SET MTS
GMDN2207A	MTS4 LVD RELAY RETROFIT KIT
GMKN4745A	Ethernet Site Link Retrofit Kit MTS4

Table 147: Available Field Replaceable Units for MTS 4 Expansion Cabinet on page 486 lists the available FRUs and Table 148: Other Field Replaceable Units for MTS 4 Expansion Cabinet Available from After Market Operations (AMO) on page 486 lists the other FRUs for MTS 4 Expansion Cabinet available from After Market Operations (AMO).

Table 147: Available Field Replaceable Units for MTS 4 Expansion Cabinet

Kit Number	Description
GMLN4689A	XHUB Controller

Table 148: Other Field Replaceable Units for MTS 4 Expansion Cabinet Available from After Market Operations (AMO)

Part Number	Description
0166502N08	RX Splitter (350 MHz – 825 MHz)
01015008001	RX Splitter (260 MHz – 266 MHz)
GMKN4744A	Ethernet Site Link Retrofit Kit MTS4 Expansion Cabinet
GMCN4735A	Redundant XHUB Controller and cable kit

Figure 211: Position of Modules in MTS 4 cabinet

Figure 212: Position of Modules in Expansion Cabinet

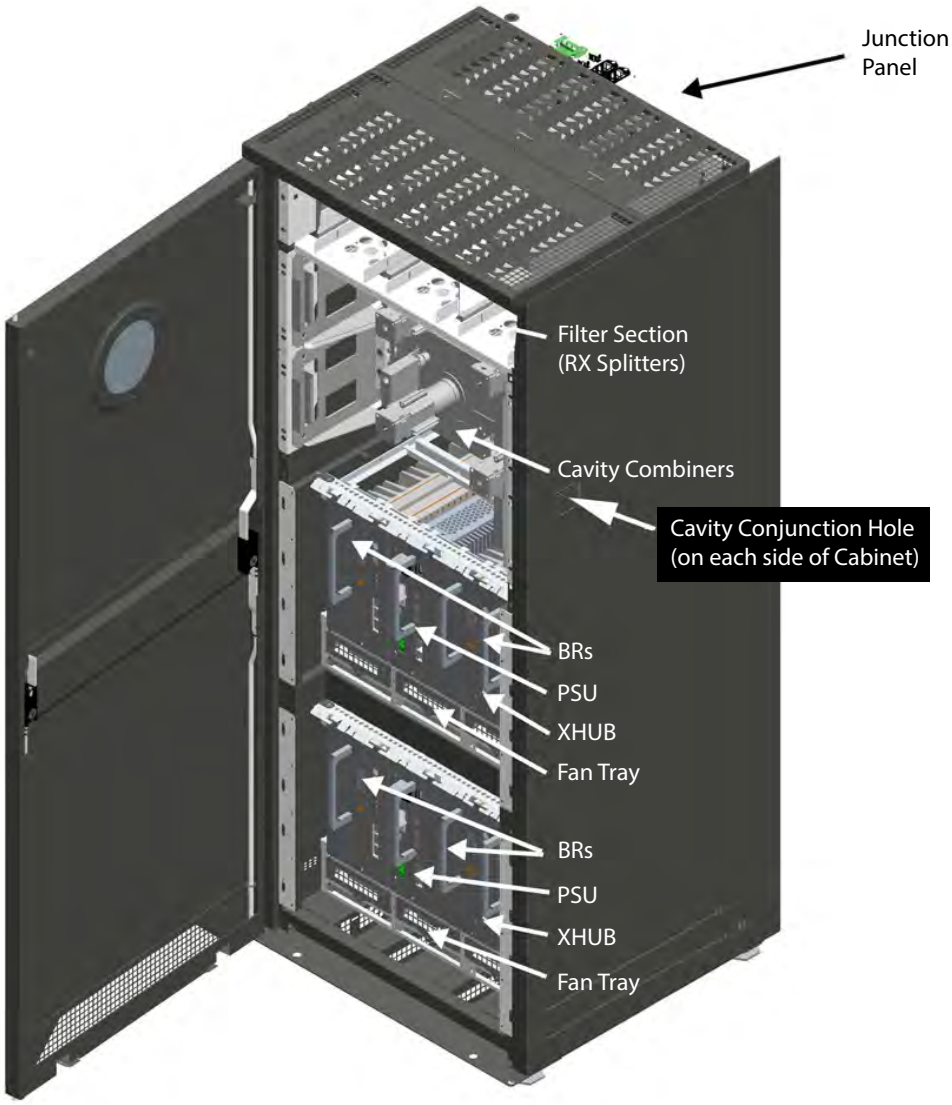

A.4

Surge Arrestors and Suppliers

Three types of surge arrestors should be used in the MTS site:

1. AC Power and X.21/E1 Interface Surge Arrestor
2. Antenna Surge Arrestor
3. Lightning Arrestor

A.4.1

AC Power and E1/X.21 Interface Surge Arrestors

Surge arrestors shall be locally procured. The selected items should be specifically designed for the application and meet all local regulations.

Supplier addresses:

- **DITHA**

  Suedfeldtrasse 7

  D - 30453 Hannover

  Germany

  Telephone: +49 (0)511 - 21260

  Telefax: +49 (0)511 - 2108302

- **DEHN GmbH Co KG**

  Postfach 1640

  D - 92306 Neumarkt

  Germany

  Telephone: +49 (0)9181 - 9060

  Telefax: +49 (0)9181 - 906100

A.4.2

Antenna Surge Arrestors

The recommended antenna surge arrestors are manufactured by Polyphaser Inc.

POLYPHASER, INC.

PO Box 9000

Minden, NV 89423

North Latin America:

Toll free: 800-325-7170

Telephone: + 775-782-2511

Telefax: + 775-782-4476

Internet: http://www.polyphaser.com

Recommended models

- 260 MHz MTS antenna (transmit/receive) - VHF50HD (Motorola P/N DSVHF50HD)
- 400 MHz MTS antenna (transmit/receive) - VHF50HD (Motorola P/N DSVHF50HD)
- 800 MHz MTS antenna 7/16 DIN (transmit/receive) - TSX-DFF-BF (Motorola P/N DSTSXDFFBF)
- 800 MHz MTS antenna (transmit/receive) - DSXL (Motorola P/N DSDSXL)
- MTS antenna (receive only) - IS-B50HN-C2 (Motorola P/N RRX4027)
- GPS Antenna - DGXZ + 06NFNF-A (Motorola P/N DSDGXZ06NFNFA)
- Remote GPS Antenna - IX-3L2DC48 (Motorola P/N DSIX3L2DC48)

NOTICE: The IX- series of the arrestor units from Polyphaser are combined units that are applicable for data and power lines.

A.4.3

Lightning Arrestors

Lightning Arrestors are available from Following European Supplier:

HOFI GmbH Co KG

Wittenbacherstrasse 12

D - 91614 Moenchsroth

Germany

Telephone: +49 (0)9853 - 1003

Telefax: +49 (0)9853 - 1005

Appendix B

Planned Maintenance Inspection (PMI)

To assist maintenance of DIMETRA products, Motorola Solutions publishes advice for recommended Planned Maintenance Inspections (PMI). For each Motorola Solutions Part Number, the Inspection Schedule indicates whether any PMI action is required/recommended, the regularity of the recommended/required action, and a brief description of the activity. The Inspection Schedule also indicates Motorola Solutions recommended PMI testing activities that should be carried out as part of the PMI Schedule.

Always read the PMI Inspection Schedule in conjunction with the relevant Motorola Solutions or Motorola Solutions 3rd party suppliers Standard Product Manuals and any Technical Information Bulletins (TIBs), which include the methods of access and other useful information.

In additional to the Planned Maintenance Inspections, Motorola Solutions recommends to run the basic functional test every 24 months. These functional tests should include RF power, RF frequency, and Bit Error Rate measurements.

Motorola Solutions recommends regular site visits for other inspections, for example, site physical security checks, generator maintenance, and so on.

Motorola Solutions also recommends the antennas and PSU/Battery/UPS tests and functional inspection according to the respective manufacturers suggestions.

CAUTION: Ensure the ventilation holes and grilles on the are not covered.

NOTICE: In the configuration with the backup battery: Check the backup battery charged by the MTS in accordance to the manufacturers instructions.

Table 149: Required Planned Maintenance Inspection Actions

Component	Required PMI Action
Site Controller Lithium backup battery	Replace every 8 years.
Heat sinks and interior of the MTS	Perform periodic inspections which require cleaning occasionally due to the buildup of dust. The frequency of this inspection is dependent upon the local environment and is more important when the MTS is operating at a high ambient temperature.

Appendix C

Static Precautions and ESD Strap

This Appendix covers the following topics:

- Static Sensitive Precautions on page 492
- ESD Wrist Strap Safety Precautions on page 492

C.1
Static Sensitive Precautions

The static grounding wrist strap (Motorola P/N 4280385A59) must always be used when handling any board or module within the MTS. Many of the boards or modules used in the MTS equipment are vulnerable to damage from static charges.

Extreme care must be taken while handling, shipping, and servicing these boards or modules. To avoid static damage, observe the following precautions:

- Before handling, shipping, and servicing MTS equipment, connect a wrist strap to the grounding clip on the equipment cabinet which is located at the bottom of the cabinet and marked with a yellow label. This discharges any accumulated static charges.

  WARNING: Use extreme caution when wearing a conductive wrist strap near sources of high voltage. The low impedance provided by the wrist strap also increases the danger of lethal shock should accidental contact with high voltage sources occur.
- Avoid touching any module, board circuitry, including any connector pins with your hands.
- Before removing a board or module, disconnect its individual power supply first.
- Avoid carpeted areas, dry environments, and certain types of clothing (silk, nylon, and so on) during service or repair due to the possibility of static buildup.
- Apply power to the circuit under test before connecting low impedance test equipment (such as pulse generators). When testing is complete, disconnect the test equipment before power is removed from the circuit under test.
- Be sure to ground all electrically powered test equipment. Connect a ground lead (-) from the test equipment to the board or module before connecting the test probe (+). When testing is complete, remove the test probe first, then remove the ground lead.
- Lay all circuit boards and modules on a static dispersive surface (a proper antistatic map) when removed from the system. This mat will be connected to ground through a high resistance element.
- Never use non-conductive material for packaging modules being transported. All modules should be wrapped with anti-static packaging material. Replacement modules shipped from the factory are packaged in a conductive material, for example, antistatic bag.

C.2
ESD Wrist Strap Safety Precautions

The ESD socket built into the cabinet housing provides a point to which a wire from a wrist strap can be connected. This is for ESD (electrostatic discharge) protection.

ESD wrist strap use is critical in the following cases:

- Replacement of any module inside a box, which includes service of any modules in a base radio.

- Service of receiver multicoupler (RMC).

CAUTION:
The RMC is a relatively open mechanical design and ESD protection is critical when servicing this module. In case of field repair, first connect the cable to the Duplexer or Preselector, then connect to the RMC. NEVER do this the other way round.

NEVER connect or disconnect the cable that connects the Duplexer and Preselector RX outputs to the inputs of the RMC without using a correctly earthed ESD wrist strap.

Figure 213: MTS LiTE ESD Strap Connection

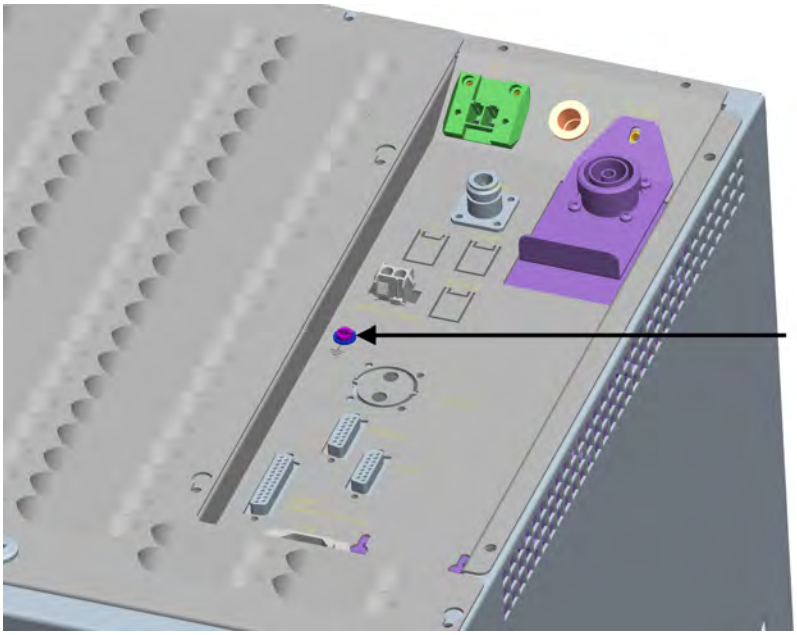

Figure 214: MTS 2 and MTS 4 ESD Strap Connection

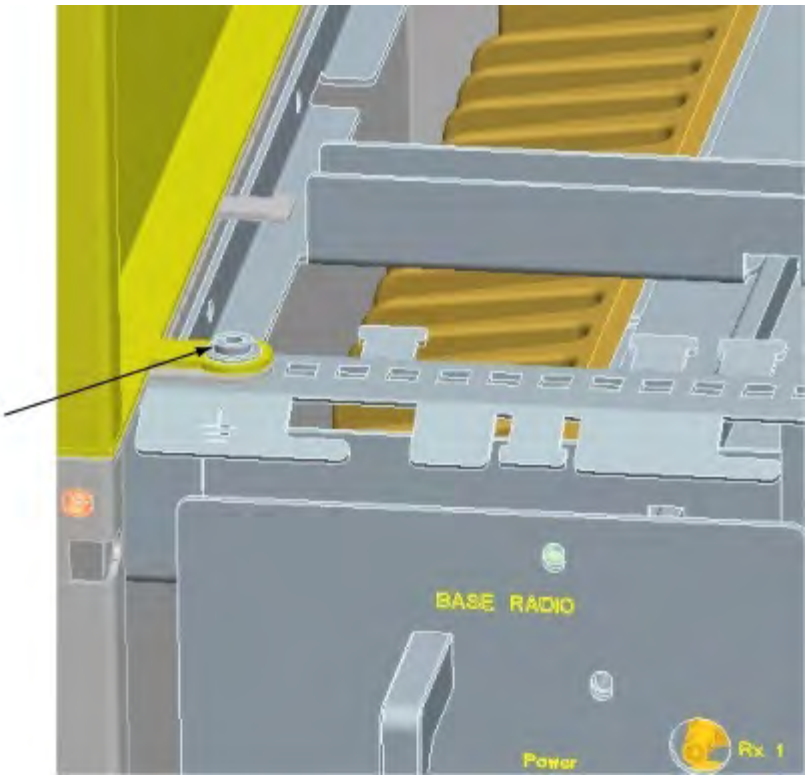

Appendix D

Assembling the GNSS Antenna

Perform this procedure to assemble a GNSS antenna.

The following figure presents the exploded view of the GNSS antenna.

Figure 215: GNSS Antenna Assembly - Exploded View

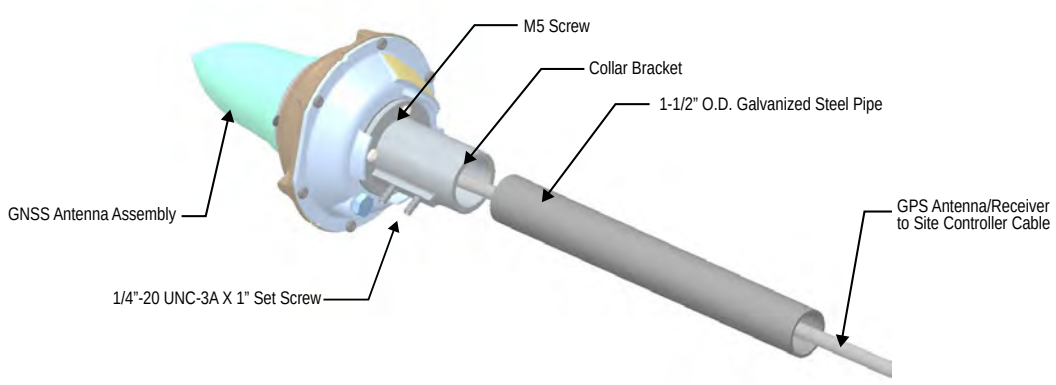

The following part numbers are valid for the relevant elements:

GNSS Antenna Assembly
PMLN7532A

Collar Bracket
BR000247A01

GPS Antenna/Receiver to Site Controller Cable
3066564B, ***<CL>***, where ***<CL>*** is the cable length code of 01, 02, or 03, meaning 40, 150, or 600 meters of cable length, respectively.

Prerequisites: Verify that you have the Allen wrench (included in the set), a T30 screwdriver, and a Phillips screwdriver.

Procedure:

1. Run the digital cable through the steel pipe and collar bracket. Attach the digital cable connector to bottom of the antenna module (male to female Deutsch connector).

   Figure 216: GNSS Antenna Assembly – Cable

2. Align four bracket screw holes with the GNSS antenna bottom mounting holes and screw the collar bracket to the bottom of the antenna module using a Phillips screwdriver.

Figure 217: GNSS Antenna Assembly – Collar Bracket

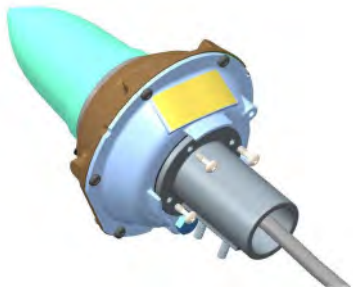

3 Fix the mounting pipe to the mounting bracket by tightening the two set screws.

Figure 218: GNSS Antenna Assembly – Securing the Pipe

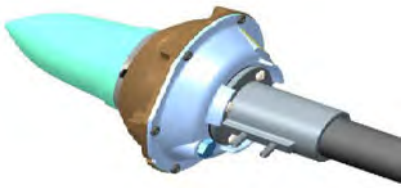

4 Attach the mounting pipe to the support structure.

5 Attach the grounding cable to the antenna module by tightening a T6 screw using a T30 screwdriver.

Figure 219: GNSS Antenna Assembly – Grounding Cable

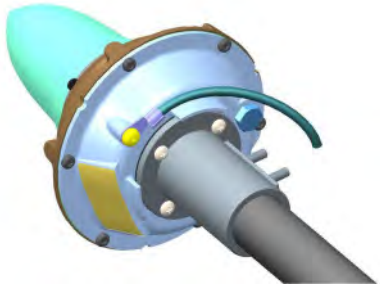

Appendix E

TETRA/DIMETRA Acronyms

The table explains the acronyms used throughout this manual and in the DIMETRA System and is not system release specific. Therefore not all terms may be relevant for a specific system or release.

Table 150: TETRA/DIMETRA Acronyms

Item	Description
A-ISSI	Assigned ISSI
A/V	Anti-Virus
AAA	Authentication, Authorization, and Accounting
ABO	Automatic Busy Override
ACC	Adjacent Control Channel
ACCH	Associated Control Channel
ACELP	Algebraic Code Excited Linear Prediction
AD	Active Directory
ADM	Alias Database Manager (part of CENTRACOM Gold Server)
AEB	Ambassador Electronics Bank
AEI	Audio Expansion Interface
AGC	Automatic Gain Control
AI	Air Interface Additional Identity
AIE	Air Interface Encryption
AIMI	Ambassador Interface Multiplex Interface
AIS	Alias Integrated Solution Archiving Interface Server
ALOM	Advanced Lights Out Management
AMB	Ambassador Board
AMS	Alert Management System
API	Application Programming Interface
APN	Access Point Name
ARP	Address Resolution Protocol
AS	Alias Server
ASC	Automatic Synchronization Configuration
ASIC	Application Specific Integrated Circuit
ASSI	Alias Short Subscriber Identity

Item	Description
ATCC	Auto Tune Cavity Combiner
ATG	Announcement Talkgroup
ATIA	Air Traffic Information Access
ATM	Asynchronous Transfer Mode
ATR	Air Traffic Router
ATS	Alphanumeric Text Service
AuC	Authentication Centre
AVC	Aggregated Virtual Circuit.
BCCH	Broadcast Control Channel
BER	Bit Error Rate
BERT	Bit Error Rate Test
BIC	Barring of Incoming Calls
BIM	Base Interface Module
BLT	Bulk Loader Tool
BNCH	Broadcast Network Channel
BOC	Barring of Outgoing Calls
bps	bits per second
BR	Base Radio
BRC	Base Radio Controller
BS	Billing Service
BSCH	Broadcast Synchronisation Channel
BTS	Base Transceiver System
CAD	Computer Aided Dispatch
CADI	Computer Aided Dispatch Interface
CAI	Common Air Interface
CAS	Channel Associated Signaling Child AntiVirus Server
CAT	Coverage Acceptance Test
CATP	Coverage Acceptance Test Procedure
CBR	Constant Bit Rate
CC	Command Control
CC	Crypto Card
CCC	Crypto Communications Controller
CCGW	Conventional Channel Gateway
CCH	Control Channel
CCI	Command Control Interface
CCITT	Consultative Committee for International Telegraph and Telephone

Item	Description
CCK	Common Cipher Key
CCM	Channel Control Module
CCMS	Customer Configuration Management System
CDM	Configuration Database Manager (part of CENTRACOM Gold Server)
CDR	Call Detail Record
CE	Crypto Engine
CEB	Central Electronics Bank
CEN	Customer Enterprise Network
CES	CENTRACOM Elite Server
CG	Charging Gateway
CHS	Cluster Hot Standby, Equivalent to Synchronised Standby
CIE	Console Interface Electronics
CIS	Center for Internet Security
CK	Cipher Key
CKEK	Common Key Encryption Key
CLIP	Calling Line Identification Presentation
CLIR	Calling/Connected Line Identification Restriction
CMG	Crypto Management Group
CMS	Cable Management System
CMSU	Central Mass Storage Unit
CNE	Central Network Equipment
CNI	Customer Network Interface
COAM	Customer Owned And Operated
COIM	Console Operator Interface Module
CORBA	Common Object Request Broker Architecture
CORI	Console Operated Remote Interface
CoU	Class of Usage
cPCI	compact Peripheral Component Interconnect
CPS	Customer Programming Software
CRC	Cyclic Redundancy Check
CRHN	Control Room Head Number
CSMA/CD	Carrier Sense Multiple Access/Collision Detect
CSMS	Core Security Management Server
CSV	Comma Separated Values
CVC	Constituent Virtual Circuit
CVO	Clear Voice Override
CWR	Cooperative WAN Routing

Item	Description
CZC	Controlling Zone Controller
DAOS	Data Add-On Services
DAQ	Delivered Audio Quality
DAT	Digital Audio Tape
DB	Data Base
DBP	Downstream Billing Processor
DC	Dispatch Console (D5.5SER and backward) Domain Controller (D6.0SER and forward)
DCE	Data Communication Equipment
DCK	Derived Cipher Key
DDI	Data Distribution Interface
DDP	Disabled Dialling Pattern
DG	Data Gateway
DEM	Digital Elevation Model
DGNA	Dynamic Group Number Assignment
DIB	Data Interface Box
DID	Direct Inbound Dialing
DL	Discreet Listening
DLCI	Data Link Connection Identifier
DM	Direct Mode Operation
DM-SCK	Direct Mode Static Cipher Key
DMO	Direct Mode Operation
DMZ	DeMilitarized Zone
DNS	Domain Name Services
DPM	Digital Power Meter
DSP	Digital Signal Processing
DSU	Data Service Unit
DSC	Digital Service Cross Connect
DTE	Data Terminal Equipment Data Traffic Estimator
DTM	Digital Terrain Model
DTMF	Dual Tone Multi-Frequency
DVD	Digital Versatile Disc
E2E	End-to-End Encryption Key Variable Loader
E2E KVL	End-to-End Encryption Key Variable Loader
EAS	Environmental Alarm System

Item	Description
EBTS	Enhanced Base Transceiver System
EC	Electronic Codebook Echo Canceller
ECK	Encryption Cipher Key
ECN	Exclusion Class Number
ECTA	Extended Console Talkgroup Assignment
ECU	Environmental Conditioning Unit
EEPROM	Electrically Erasable Programmable Read Only Memory
EIA	Electronic Industries Association
EOL	End Of Life
ESD	Electrostatic Discharge
ETG	Enhanced Telephone Gateway
ETSI	European Telecommunications Standards Institute
FACCH	Fast Associated Control Channel
FAS	Frame Alignment Signal
FAT	Factory Acceptance Test
FIFO	First in, first out
FIPS	Federal Information Processing Standards
FLM	Formatted Logical Message
FNE	Fixed Network Equipment
FRAD	Frame Relay Access Device
FRE	Field Replaceable Entity
FRU	Field Replaceable Unit
FSSN	Fleet Specific Subscriber Number
FSU	Fault Sense Unit
FT	Fault Tolerant
FTP	File Transfer Protocol
FV	FullVision
FVS	FullVision Server
FW	Firewall
G-HLR	Group Home Location Register
GAS	General Application Server
GBN	Ground Based Network
GCK	Group Cipher Key
GCKN	Group Cipher Key Number
GMS	Group Message Server
GOS	Grade Of Service

Item	Description
GPIOM	General Purpose Input/Output Module
GPRS	General Packet Radio Service
GPS	Global Positioning System
GSKO	Group Session Key for OTAR
GSSI	Group Short Subscriber Identity
GTP	GPRS Tunneling Protocol
GTSI	Group TETRA Subscriber Identity
GUI	Graphical User Interface
HDD	Hard Disc Drive
HDLC	High level Data Link Control
HLA	Home Location Area
HLR	Home Location Register
HPOV	Hewlett-Packard OpenView
HSRP	High Speed Redundancy Protocol
HSSI	High Speed Serial Interface
HZM	Home Zone Map
IDC	Initialization Default Configuration
I-HLR	Individual subscriber unit HLR
ICCS	Integrated Command and Control System
ICMP	Internet Control Message Protocol
ID	Identifier or Identification
IDSS	Intrusion Detection System Sensor
IEC	International Electro-technical Committee
IEEE	Institute of Electrical and Electronic Engineers.
IFM	Interzone Fault Management
IGMP	Internet Group Management Protocol
iLO	Integrated Lights-Out
INM	Integrated Network Manager (FullVision)
IOP	Inter OPerability
IP	Internet Protocol
IRR	Instant Recall Recorder
ISA	Industry Standard Architecture
ISDN	Integrated Services Digital Network
ISI	Inter System Interface
ISSI	Individual Short Subscriber Identity
ITC	Inter TETRA Connection
ITSI	Individual TETRA Subscriber Identity

Item	Description
ITU	International Telecommunications Union
IVD	Integrated Voice and Data
IVN	InterVening Network
IZ	Interzone
IZAC	Interzone Audio Channel
IZCP	Interzone Control Path
IZNM	Interzone Network Manager
K	Authentication Key
KAG	Key Association Group
KEK	Key Encryption Key
KID	Key Identification
KMF	Key Management Facility
KMM	Key Management Message
KSG	Key Stream Generator
KSS	Key Stream Segments
KVL	Key Variable Loader
KVM	Keyboard, Video, and Mouse
LA	Local Area
LAN	Local Area Network
LED	Light Emitting Diode
LMI	Link Management Interface
LNA	Low Noise Amplifier
LOMI	Logging Operator Multiplex Interface
LORI	Logging Recorder Interface
LLR	Local Logging Recorder
LST	Local Site Trunking
LULC	Land Use Land Cover
LZC	Large Zone Core
MAC	Media Access Control
MBTS	Mini Base Transceiver System
MCC	Mobile Country Code
MCCH	Main Control Channel
MDG	Mobile Data Gateway
MDM	Preside Multiservice Data Manager
MER	Message Error Rate
MFR	Multilink Frame Relay
MG	Multigroup

Item	Description
MGCK	Modified Group Cipher key
MGEG	Motorola Gold Elite Gateway
MIB	Management Information Base
MiBAS	Motorola integrated Billing and Administration System
MLE	Mobile Link Entity
MMC	Microsoft Management Console
MMI	Man Machine Interface
MNC	Mobile Network Code
MND	Motorola Networks Division
MNR	Motorola Network Router
MO	Mobile Originated
MOSES	Make Our System Easier to Support
MoU	Memorandum of Understanding
MS	Mobile Station
MSEL	Multiselect
MSFC	Multilayer Switch Feature Card
MSK	Minimum Shift Keying
MSO	Mobile Switching Office
MT	Mobile Terminated
MTBF	Mean Time Between Failures
MTIG	Motorola Telephone Interconnect Gateway
MTS	Motorola Transceiver System
MTU	Maximum Transmission Unit
MUX	MultipleXer
MZS	Multi-Zone System
NACK	Negative status acknowledgment
NAM	Network Analyzer Module
NAT	Network Address Translation
NI	Network Interface
NIB	Network Interface Barrier
NIC	Network Interface Card (Ethernet Card)
NIS	Network Information Service
NM	Network Management
NMC	Network Management Centre
NMT	Network Management Terminal
NNM	Network Node Manager.
NOC	Network Operations Centre

Item	Description
NS	Network Security
NSC	Normal Synchronization Configuration
NSM	Juniper NetScreen-Security Manager
NSMS	Network Security Management Subsystem
NT	New Technologies. A Microsoft Windows environment Network Termination
NTMS	Network Transport Management Server
NTP	Network Time Protocol
NTS	Network Time Server
OOB	Out-Of-Band
OS	Operating System
OSI	Open Systems Interconnect
OSPF	Open Shortest Path First
OSS	Operations Support Subsystem
OTAK	Over-The-Air-Key management
OTAR	Over-The-Air-Rekeying protocol
P-ISSI	Permanent ISSI
P25	APCOs Project 25
PA	Power Amplifier
PABX	Private Automatic Branch Exchange
PCI	Peripheral Component Interconnect
PCM	Pulse Code Modulation
PD	Packet Data
PDCH	Packet Data Channel
PDG	Packet Data Gateway
PDN	Packet Data Network
PDR	Packet Data Router
PDS	Packet Data Service
PDU	Protocol Data Unit
PEI	Peripheral Equipment Interface
PIM-SM	Protocol Independent Multicast-Sparse Mode
PIN	Personal Identification Number
PKI	Public Key Infrastructure
PN	Peripheral Network
PN Router	Peripheral Network Router
PPC	Pre-emptive Priority Call
PPP	Point-to-Point Protocol

Item	Description
PrC	Provisioning Center
PRC	Primary Reference Clock
PRNM	Private Radio Network Management.
PROM	Programmable Read Only Memory.
PSK	Phase Shift Keying.
PSM	Public Safety Microphone.
PSTN	Public Switched Telephone Network
PSU	Power Supply Unit
PTT	Push-To-Talk
PVC	Permanent Virtual Circuit
QOS	Quality Of Service
QSIG	Q-reference point Signalling
R-ISSI	Radio ISSI
RADIUS	Remote Authentication Dial-in User Service
RAG	Resource Allocation Group.
RAID	Redundant Array of Independent Disks
RAM	Random Access Memory
RAPI	Radio Applications Programming Interface
RAS	Remote Access Server
RCM	Radio Configuration Manager
RDP	Remote Desktop Protocol
RF	Radio Frequency
RFDS	Radio Frequency Distribution System
RIP	Routing Information Protocol.
RMC	Receiver Multicoupler.
RME	Resource Manager Essentials
RNG	Radio Network Gateway
RNI	Radio Network Infrastructure
ROCI	Remote Operator Console Interface
RoHS	Reduction of Hazardous Substances
RP	Rendezvous Point
RSM	Remote Speaker Microphone (for a Mobile Station)
RSSI	Radio Signal Strength Indicator
RSS	Radio Service Software
RSU	Recent System User
RTC	Real Time Clock
RUA	Radio User Assignment

Item	Description
RUI	Radio User Identity
RX	Receiver
SF	Store and Forward feature
SAC	Subscriber Access Control
SAI	Session Authentication Information
SACCH	Slow Associated Control Channel
SAS	Serial Attached SCSI Symantec AntiVirus™ Server
SATA	Serial ATA
SATN	System Architecture and Transport Network
SAV	Symantec AntiVirus Client
SAVCE	Symantec AntiVirus Corporate Edition
SC	Site Controller
SCI	Serial Communications Interface
SCK	Static Cipher Key
SCK-TMO	Static Cipher Key for Trunked Mode Operation
SCKN	Static Cipher Key Number
SCO	Site Capacity Option
SD	Short Data
SDR	Short Data Router
SDS	Short Data Service
SDS - TL	Short Data Service Transport Layer
SDTS	Short Data Transport Service
SEK	Signalling Encryption Key
SFS	Store and Forward Server
SGSN	Serving GPRS Support Node
SIB	Service Interface Barrier
SIM	Subscriber Identity Module
SIMM	Single In-Line Memory Module
SIT	System Integration and Test
SMS	Secure Manager Subsystem
SMSO	Shared MSO
SNDCP	Sub Network Dependent Convergence Protocol
SNMP	Simple Network Management Protocol
SOC	Security Operations Centre
SONET	Synchronous Optical Network
SPAS	System Parent Anti Virus Server

Item	Description
SPI	Smart Phone Interface
SRAM	Static Random Access Memory
SR	System Release
SRI	Site Reference ISA
SS7	Signaling System 7
SSC	Symantec System Center™
SSI	Short Subscriber Identity.
SSL	Secure Socket Layer
SSS	System Statistics Server
STM	System Timer Module
SVC	Switched Virtual Circuit
SWC	Site Wide Call
SWDL	Software Download feature
SWDLM	Software Download Manager
SwMI	Switching and Management Infrastructure
SWTG	Site Wide Talkgroup
SZC	Small Zone Core
TCH	Traffic Channel.
TCP/IP	Transmission Control Protocol / Internet Protocol.
TDMA	Time Division Multiple Access
TE	Terminal Equipment
TEI	TETRA Equipment Identity
TEK	Traffic Encryption Key
TESS	TETRA BTS Service Software
TETRA	TErrestrial Trunked RAdio
TG	Talkgroup
TI	Telephone Interconnect
TIA	Telecommunications Industries Association
TIG	Telephone Interconnect Gateway
TLAN	Transitional Local Area Network
TM-SCK	Trunked Mode Static Cipher Key
TMI	TETRA Management Identity
TMO	Trunked Mode Operation
TMSS	Transmit Mode Selector Switch
TNM	Transport Network Management
TNPS	Transport Network Performance Server
TPI	Talking Party Identification

Item	Description
TSC	TETRA Site Controller
TSI	TETRA Subscriber Identity
TX	Transmitter
Tx-I	Transmit Inhibit
UCL	User Configuration of Logging interfaces
UCM	User Configuration Manager Universal Crypto Module
UCS	User Configuration Server
UDP	User Data Protocol
UI	User Interface
UKEK	Unique Key Encryption Key
UPS	Uninterruptible Power Supply
UTC	Universal Time Coordinated
V+D	Voice and data
VDTM	Virus Definition Transport Method
VICP	Very Intelligent Communications Processor
VLAN	Virtual Local Area Network
VLR	Visitor Location Register
VM	Virtual Machine
VOX	Voice Operated Control
VPN	Virtual Private Network
VPN-1	Checkpoints VPN implementation.
VRF	VPN Routing and Forwarding
VRRP	Virtual Router Redundancy Protocol
VU	Voice Unit
WAN	Wide Area Network
WEEE	Waste Electrical and Electronic Equipment
XML	eXtensible Mark-up Language
ZC	Zone Controller
ZCM	Zone Configuration Manager
ZDS	Zone Database Server
ZLM	Zone Link Multiplexer
ZM	Zone Manager
ZMS	Zone Manager Subsystem
ZSS	Zone Statistics Server