APPLICANT: MOTOROLA SOLUTIONS EQUIPMENT TYPE: ABZ89FT5902
109AB-T5902

Exhibit D: User Manual

Operational or User's Manual

The manual should include instruction, installation, operator, or technical manuals with required 'information to the users'. This manual should include a statement that cautions the user that changes or modifications not expressly approved by the party responsible for compliance could void the user's authority to operate the equipment. The manual shall include RF Hazard warning statements, if applicable.

Manual Sections Provided:

DBR M12 700/800 MHz RF Site Installation Guide (September 2024)

Chapter 1: DBR M12 MultiCarrier Site Description
Chapter 2: DBR M12 MultiCarrier Site Equipment Installation
Chapter 3: DBR M12 MiltiCarrier Site Installation
Chapter 7.7: Configuring the DBR M12 Trunking RF Site
Chapter 8.18: Setting the Transmitter Power
Chapter 10: DBR M12 MultiCarrier Site FRU Procedures

Applicant: Motorola Solutions

EQUIPMENT TYPE: ABZ89FT5902 / 109AB-T5902

MOTOROLA SOLUTIONS

ASTRO® 25

INTEGRATED VOICE AND DATA

DBR M12 700/800 MHz RF Site Installation Guide

System Release AN2024.HS, AN2024.1, 2022.HS, 2022.1, 2021.1

SEPTEMBER 2024

© 2024 Motorola Solutions, Inc. All Rights Reserved.

MN010943A01-C

Intellectual Property and Regulatory Notices

Copyrights

The Motorola Solutions products described in this document may include copyrighted Motorola Solutions computer programs. Laws in the United States and other countries preserve for Motorola Solutions certain exclusive rights for copyrighted computer programs. Accordingly, any copyrighted Motorola Solutions computer programs contained in the Motorola Solutions products described in this document may not be copied or reproduced in any manner without the express written permission of Motorola Solutions.

No part of this document may be reproduced, transmitted, stored in a retrieval system, or translated into any language or computer language, in any form or by any means, without the prior written permission of Motorola Solutions, Inc.

Trademarks

MOTOROLA, MOTO, MOTOROLA SOLUTIONS, and the Stylized M Logo are trademarks or registered trademarks of Motorola Trademark Holdings, LLC and are used under license. All other trademarks are the property of their respective owners.

License Rights

The purchase of Motorola Solutions products shall not be deemed to grant either directly or by implication, estoppel or otherwise, any license under the copyrights, patents or patent applications of Motorola Solutions, except for the normal nonexclusive, royalty-free license to use that arises by operation of law in the sale of a product.

Open Source Content

This product may contain Open Source software used under license. Refer to the product installation media for full Open Source Legal Notices and Attribution content.

European Union (EU) and United Kingdom (UK) Waste of Electrical and Electronic Equipment (WEEE) Directive

The European Union's WEEE directive and the UK's WEEE regulation require that products sold into EU countries and the UK must have the crossed-out wheelie bin label on the product (or the package in some cases). As defined by the WEEE directive, this crossed-out wheelie bin label means that customers and end users in EU and UK countries should not dispose of electronic and electrical equipment or accessories in household waste.

Customers or end users in EU and UK countries should contact their local equipment supplier representative or service center for information about the waste collection system in their country.

Disclaimer

Please note that certain features, facilities, and capabilities described in this document may not be applicable to or licensed for use on a specific system, or may be dependent upon the characteristics of a specific mobile subscriber unit or configuration of certain parameters. Please refer to your Motorola Solutions contact for further information.

© 2024 Motorola Solutions, Inc. All Rights Reserved

Contact Us

The Centralized Managed Support Operations (CMSO) is the primary contact for technical support included in your organization's service agreement with Motorola Solutions. To enable faster response time to customer issues, Motorola Solutions provides support from multiple countries around the world.

Service agreement customers should be sure to call the CMSO in all situations listed under Customer Responsibilities in their agreement, such as:

- To confirm troubleshooting results and analysis before taking action

Your organization received support phone numbers and other contact information appropriate for your geographic region and service agreement. Use that contact information for the most efficient response. However, if needed, you can also find general support contact information on the Motorola Solutions website, by following these steps:

1. Enter motorolasolutions.com in your browser.
2. Ensure that your organization's country or region is displayed on the page. Clicking or tapping the name of the region provides a way to change it.
3. Select "Support" on the motorolasolutions.com page.

Comments

Send questions and comments regarding user documentation to documentation@motorolasolutions.com.

Provide the following information when reporting a documentation error:

- The document title and part number
- The page number or title of the section with the error
- A description of the error

Motorola Solutions offers various courses designed to assist in learning about the system. For information, go to https://learning.motorolasolutions.com to view the current course offerings and technology paths.

Document History

Part Number	Description	Date
MN010943A01-A	Original release of the *DBR M12 700/800 MHz RF Site Installation Guide*.	July 2024
MN010943A01-B	Updated sections: ● Replacing the Transceiver Module on page 193 ● Replacing the Power Amplifier on page 195 ● Adding a Transceiver on page 229 ● Adding a Power Amplifier on page 229	August 2024
MN010943A01-C	Revised for the AN2024.HS and AN2024.1 system releases.	September 2024

Contents

Intellectual Property and Regulatory Notices 2
Contact Us 3
Document History 4
List of Figures 11
List of Tables 14
List of Processes 16
List of Procedures 17
About DBR M12 700/800 MHz RF Site Installation Guide 20
Related Information 20
Chapter 1: DBR M12 MultiCarrier Site Description 21
1.1 DBR M12 MultiCarrier Site in an ASTRO Repeater Site 21
1.2 DBR M12 MultiCarrier Site in a Trunked IP Simulcast Subsystem 21
1.3 DBR M12 MultiCarrier Site Components 21
1.3.1 DSC 8500 Physical Description 25
1.3.2 XCVR Physical Description 29
1.3.3 MCPA Physical Description 31
1.3.4 RMC Physical Description 32
1.3.5 N-Way Combiner Physical Description 34
1.3.6 N-Way Splitter Physical Description 36
1.3.7 RFDS Physical Description 38
1.3.8 DBR M12 MultiCarrier Site DC Power System 40
1.3.9 DBR M12 MultiCarrier Site AC Power System 43
1.4 DBR M12 MultiCarrier Site RFDS Transmit Path 44
1.5 DBR M12 MultiCarrier Site RFDS Receive Path 46
1.6 DBR M12 MultiCarrier Site Specifications 47
1.6.1 Specifications for DBR M12 MultiCarrier Site for Integrated Voice and Data (700/800 MHz) 48
1.6.1.1 DBR M12 MultiCarrier Site Innovation Science and Economic Development Canada (700/800 MHz) 52
1.6.2 DBR M12 MultiCarrier Site Receive Expansion Cable Length Specifications 52
1.6.3 Receive Multi-Coupler/Low Noise Amplifier(RMC/LNA) and Multi-Coupler (RMC) Specifications (700/800 MHz) 53
Chapter 2: DBR M12 MultiCarrier Site Equipment Installation 54
2.1 Breaker Recommendations 54
2.2 Cabling Requirements 54

2.2.1 DBR M12 MultiCarrier Site Grounding.....55
2.3 Floor Mounting.....56
2.4 Frequency Reference Connection.....58
2.5 Connecting GNSS Units to DSC 8500s.....58
2.5.1 Assembling the GNSS Antenna.....60
2.5.2 GNSS Lightning Arrestor.....62
Chapter 3: DBR M12 MultiCarrier Site Installation.....64
3.1 Pre-Installation Tasks.....64
3.1.1 Preparing the Equipment for Installation.....64
3.2 General Safety Precautions.....65
3.2.1 RF Site Devices Supplemental Safety Installation Requirements.....67
3.2.2 DC Mains Grounding Connections.....68
3.2.2.1 Disconnect Device Permanently Connected.....68
3.2.2.2 Multiple Power Sources.....69
3.2.2.3 Connection to Primary Power.....69
3.2.2.4 Replaceable Batteries.....69
3.2.3 Rack Transportation Strap Bar.....69
3.2.4 Maintenance Requiring Two People.....70
3.2.5 Equipment Racks.....70
3.2.5.1 Lifting Equipment Racks Horizontally.....70
3.2.5.2 Lifting Equipment Racks Vertically.....71
3.3 General Installation Standards and Guidelines.....72
3.3.1 Site Preparation Overview.....72
3.3.2 Equipment Inspection and Inventory Recommendations.....73
3.3.3 Placement and Spacing Recommendations.....73
3.3.4 Cabinet Bracing Recommendations.....74
3.3.5 Mounting Cabinets or Racks to a Floor.....75
3.3.6 Bonding and Grounding Requirements.....75
3.3.7 Cabling Requirements.....76
3.3.8 Power Guidelines and Requirements.....76
3.3.8.1 AC Power Guidelines and Requirements.....76
3.3.9 Electrostatic Discharge Recommendations.....77
3.3.10 FCC Requirements.....77
3.3.11 Networking Tools.....78
3.3.12 Installation/Troubleshooting Tools.....78
3.3.13 Technical Support for Installation.....79
3.3.13.1 Site-Specific Information.....80
3.4 Power Connections.....80
3.4.1 DC Power Connection Wire Gauge Calculations for Integrated Voice and Data.....80

3.4.2 Connecting Power to an AC Power Source 81
3.5 Grounding 82
3.6 Junction Panel Connections 83
3.6.1 DSC 8500 Network Connections 85
3.6.2 Optional AC Power Supply Unit Back Panel Connections 85
3.7 RMC Attenuation Configuration 86
Chapter 4: On-Premises Software Hub Application 94
4.1 Installing On-Premises Software Hub on the Service Laptop 95
4.2 Installing On-Premises Software Hub on the NM Client 96
4.2.1 Verifying CSMS and Windows Supplementary Versions 97
4.2.2 Importing New Firewall Rules from CSMS Configuration Media 97
4.2.3 Pushing Updates to Endpoints 99
4.3 Importing the DSC 8500 Software Bundle 100
4.4 Discovering the Site 100
4.5 Connecting to the Site 101
4.6 Managing Trusted Hosts List 102
4.7 Site Actions 102
4.8 Collecting Action Logs 102
Chapter 5: Provisioning and Configuration Agent Application 104
5.1 PCA Users 104
5.2 Logging On to the PCA for the First Time 105
5.2.1 Logon Information 106
5.3 Resetting SNMPv3 Passphrases to Default on DSC 8500 107
5.4 Setting Up PCA Users and Passwords 107
Chapter 6: Deploying the DSC 8500 Software 109
Chapter 7: DBR M12 MultiCarrier Site Configuration 111
7.1 Configuring SNMPv3 Passphrases on DSC 8500s for the MotoAdmin Account 111
7.2 Configuring SNMPv3 Passphrases on DSC 8500s for Other USM Accounts 112
7.3 Setting up the Account Policies 113
7.4 Configuring the Login Banner 114
7.5 Configuring Centralized Authentication for PCA Users 114
7.6 Verifying the Version of the Installed DC Plugin 116
7.6.1 Updating Groups in Active Directory and DNS Records 117
7.6.2 Updating DNS Records 118
7.7 Configuring the DBR M12 Trunking RF Site 119
7.7.1 Configuring the System 120
7.7.1.1 System 120
7.7.2 Configuring the Band Plan 121

7.7.2.1 ASR Trunking Site Band Plan..... 121
7.7.3 Configuring the Zone.....122
7.7.3.1 Zone..... 122
7.7.4 Configuring the Site.....123
7.7.4.1 Site..... 124
7.7.5 Configuring the Channels.....127
7.7.5.1 Channel..... 127
7.7.6 Configuring the Subsite.....132
7.7.6.1 Subsite..... 132
7.8 Updating SysName in PCA.....133
7.9 Updating DNS Servers in PCA..... 134
7.10 Updating NTP Servers in PCA.....135
7.11 Configuring the GNSS Antenna..... 135
7.11.1 GNSS Unit Cable Length Delay Offset Calibration.....136
7.12 DSC 8500 Switch Configuration..... 137
7.12.1 Configuring the DSC 8500 Switch.....138
7.12.2 Enabling and Disabling a DSC 8500 Service Port with Local Access.....139
7.12.3 Enabling/Disabling MAC Port Lockdown on the DSC 8500..... 140
7.13 Discovering the Hardware.....140
7.14 Exporting the Site Configuration from the PCA.....141
7.15 Importing the Site Configuration into the PCA..... 142
7.16 Enabling External Backup Power Supply Control..... 142
7.17 Verifying the DBR M12 MultiCarrier Site Security Configuration 143
7.18 Managing SNMP Users from the PCA.....145
7.19 Configuring the Auxiliary Inputs..... 146
Chapter 8: DBR M12 MultiCarrier Site Operation..... 148
8.1 Configuring DSC 8500 Active Directory Authentication..... 148
8.2 Updating the DSC 8500 Local User Account Password..... 149
8.3 Downloading DSC 8500 Logs.....150
8.3.1 Encrypting DSC 8500 Logs and Network Captures..... 150
8.4 Downloading Network Captures..... 151
8.5 Restarting the DSC 8500 in PCA.....152
8.6 Restarting the DSC 8500 from a Terminal..... 152
8.7 Resetting the PCA Password.....153
8.8 Recovering the PCA Shared Accounts..... 154
8.9 Changing DSC 8500 BIOS Password.....154
8.10 Configuring Syslog.....155
8.11 Wiping the Software and Sensitive Data.....156
8.12 Viewing the Port Security State on the DSC 8500.....157

8.13 Capturing the MAC Address of Devices Connected to the DSC 8500 Ports..... 158
8.14 Aligning the Site Reference by Using the Frequency Counter.....158
8.15 Aligning the Site Reference by Using the Service Monitor..... 160
8.16 Discovering Devices with the UNCW Discovery Wizard.....161
8.16.1 Removing a Device from the Lost and Found Folder.....163
8.17 Discovering Groups of Network Elements..... 163
8.17.1 Deleting Network Elements.....165
8.17.2 Discovery Type Parameters..... 165
8.17.3 Groups of Network Elements Managed by UEM..... 166
8.17.4 Deleting Network Elements in UEM..... 166
8.18 Setting the Transmitter Power.....167
Chapter 9: DBR M12 MultiCarrier Site Software Upgrade..... 169
9.1 Single Site Software Upgrade.....169
9.1.1 Transferring Software to DSC 8500s for a Single Site..... 170
9.1.2 Upgrading the DSC 8500 Software for a Single Site..... 171
9.1.3 Transferring and Upgrading the DSC 8500 Software for a Single Site..... 172
9.2 Multisite Software Upgrade.....172
9.2.1 Transferring Software to DSC 8500s for a Multisite..... 173
9.2.2 Upgrading DSC 8500 Software for a Multisite..... 174
9.3 Software Transfer Failure Recovery..... 175
9.4 Software Upgrade Failure Recovery.....176
9.4.1 Rolling Back the DSC 8500 Software Upgrade.....177
9.4.2 Preparing the DSC 8500 Failed Software Upgrade Recovery..... 178
9.4.3 Recovering the DSC 8500 Failed Software Upgrade.....179
9.4.4 Finalizing the DSC 8500 Failed Software Upgrade.....180
9.4.5 Deploying the DSC 8500 Software after Failed Software Upgrade..... 181
Chapter 10: DBR M12 MultiCarrier Site FRU Procedures.....183
10.1 DBR M12 MultiCarrier Site FRUs and Parts..... 183
10.2 Replacing the Power Amplifier Fan Assembly..... 184
10.3 Replacing the Power Supply Unit Chassis.....186
10.4 Replacing the Power Supply Unit..... 190
10.5 Replacing the DSC 8500 Site Processor..... 191
10.5.1 Deploying the DSC 8500 Software After the DSC 8500 Replacement..... 192
10.5.2 Configuring DSC 8500 After Disaster Recovery Software Installation..... 193
10.6 Replacing the Transceiver Module.....193
10.7 Replacing the Power Amplifier.....195
10.8 Replacing the Site Preselector.....197
10.9 Replacing the Transmit Filter..... 199
10.10 Replacing the Phasing Harness (for Diplexer Function)..... 201

10.11 Replacing the N-Way Combiner....203
10.12 Replacing the N-Way Splitter....205
10.13 Replacing the RMC Modules....207
Chapter 11: DBR M12 MultiCarrier Site Troubleshooting and Disaster Recovery..... 209
11.1 Power Amplifier Fan Air Filter Maintenance....209
11.2 DSC 8500 Troubleshooting....210
11.3 Site Reference Troubleshooting....211
11.4 Transceiver Troubleshooting....214
11.5 Power Amplifier Troubleshooting....216
11.6 Transmit Bank Troubleshooting....220
11.7 Channel Troubleshooting....221
11.8 RF Modem Troubleshooting....222
11.9 Logon Troubleshooting....224
11.10 On-Premises Software Hub Troubleshooting....225
11.10.1 Troubleshooting the On-Premises Software Hub Failure to Start When the Port 49691 Is in Use....226
Chapter 12: DBR M12 MultiCarrier Site Expansion....227
12.1 Installing the DBR M12 MultiCarrier Site Expansion Rack....227
12.2 Deploying the DSC 8500 Software to the DBR M12 MultiCarrier Site Expansion Rack....228
12.3 Adding a Transceiver....229
12.4 Adding a Power Amplifier....229
12.5 Adding an XCVR Module....231
12.6 Adding a Cabinet RMC....232
12.7 Adding Receive Diversity....233
12.8 Adding a Transmit Bank....234
12.9 Converting from a 2-3 N-Way System to a 4-6 N-Way System....236
12.10 Configuring the Expansion Rack....239

List of Figures

Figure 1: DBR M12 MultiCarrier Site Components....23
Figure 2: DSC 8500 Front Panel....26
Figure 3: DSC 8500 RJ45 Ports at DBR M12 MultiCarrier Site....26
Figure 4: Internal Site Alarm Input Pins for External Backup Power Supply Control....27
Figure 5: DSC 8500 Front Panel LEDs and Buttons....28
Figure 6: XCVR Front Panel LEDs and Ports....30
Figure 7: MCPA Front Panel LEDs and Ports....31
Figure 8: Fully Populated RMC Cardcage....32
Figure 9: Site RMC....33
Figure 10: Cabinet RMC....34
Figure 11: 2-3 N-Way Combiner....35
Figure 12: 2-3 N-Way Combiner on Bracket....35
Figure 13: 4-6 N-Way Combiner....35
Figure 14: 4-6 N-Way Combiner on Bracket....35
Figure 15: 2-3 N-Way Splitter....37
Figure 16: 2-3 N-Way Splitter on Bracket....37
Figure 17: 4-6 N-Way Splitter....37
Figure 18: 4-6 N-Way Splitter on Bracket....38
Figure 19: RFDS Tray – Fully Populated....38
Figure 20: Tx post filter....39
Figure 21: Rx Preselector....40
Figure 22: DC Architecture....41
Figure 23: Junction Panel in DBR M12 MultiCarrier Site (Open Rack Version – Top View)....42
Figure 24: Power Input Distribution in DBR M12 MultiCarrier Site (Open Rack Version – Side View)....43
Figure 25: DBR M12 MultiCarrier Site Power Shelves....44
Figure 26: One Bank (Same Band)....45
Figure 27: Two Banks (Same or Different Bands)....45
Figure 28: Two Banks with Diplexer Phasing Harness (Different Bands)....46
Figure 29: Top of Rack Power for Different Transmitter Configurations....46
Figure 30: DBR M12 MultiCarrier Site Receive Path (700/800 MHz)....47
Figure 31: Open Rack Floor Mounting Detail....56
Figure 32: Open Rack – Side View....57
Figure 33: Cabinet Floor Mounting Detail....58
Figure 34: PMUG1018A GNSS Antenna Assembly – Exploded View....60
Figure 35: PMUG1018A GNSS Antenna Assembly – Cable....61
Figure 36: PMUG1018A GNSS Antenna Assembly – Collar Bracket....61

Figure 37: PMUG1018A GNSS Antenna Assembly – Securing the Pipe....61
Figure 38: PMUG1018A GNSS Antenna Assembly – Grounding Cable....62
Figure 39: Lightning Arrestor – System Connections....62
Figure 40: Lightning Arrestor DS-IX-2L1M1DC48–IG Model Wiring....63
Figure 41: Warning Label on Hot Modules....67
Figure 42: Rack Transportation Strap Location....69
Figure 43: Lengths and Angles for Lifting Using the Eyenuts....71
Figure 44: Proper Alignment of the Eyenuts....72
Figure 45: Wire Gauge and Distance Guide....81
Figure 46: Rack Grounding....83
Figure 47: Cabinet Junction Panel....84
Figure 48: Rack Junction Panel Network Connections....84
Figure 49: Junction Panel Network Connections....85
Figure 50: AC Power Supply Unit Rear View....85
Figure 51: Site RMC....86
Figure 52: Site RMC DIP Switches....87
Figure 53: RMC DIP Switch Example - 0 dB....87
Figure 54: RMC DIP Switch Example - 1 dB....87
Figure 55: RMC DIP Switch Example - 2 dB....88
Figure 56: RMC DIP Switch Example - 3 dB....88
Figure 57: RMC DIP Switch Example - 4 dB....88
Figure 58: RMC DIP Switch Example - 5 dB....88
Figure 59: RMC DIP Switch Example - 6 dB....88
Figure 60: RMC DIP Switch Example - 7 dB....88
Figure 61: RMC DIP Switch Example - 8 dB....89
Figure 62: RMC DIP Switch Example - 9 dB....89
Figure 63: RMC Dip Switch Example - 10 dB....89
Figure 64: RMC Dip Switch Example - 11 dB....89
Figure 65: RMC Dip Switch Example - 12 dB....89
Figure 66: RMC Dip Switch Example - 13 dB....89
Figure 67: RMC Dip Switch Example - 14 dB....90
Figure 68: RMC Dip Switch Example - 15 dB....90
Figure 69: RMC Dip Switch Example - 16 dB....90
Figure 70: RMC Dip Switch Example - 17 dB....90
Figure 71: RMC Dip Switch Example - 18 dB....90
Figure 72: RMC Dip Switch Example - 19 dB....90
Figure 73: RMC Dip Switch Example - 20 dB....91
Figure 74: RMC Dip Switch Example - 21 dB....91
Figure 75: RMC Dip Switch Example - 22 dB....91

Figure 76: RMC Dip Switch Example - 23 dB....91
Figure 77: RMC Dip Switch Example - 24 dB....91
Figure 78: RMC Dip Switch Example - 25 dB....91
Figure 79: RMC Dip Switch Example - 26 dB....92
Figure 80: RMC Dip Switch Example - 27 dB....92
Figure 81: RMC Dip Switch Example - 28 dB....92
Figure 82: RMC Dip Switch Example - 29 dB....92
Figure 83: RMC Dip Switch Example - 30 dB....92
Figure 84: RMC Dip Switch Example - 31 dB....92
Figure 85: Site RMC Alarm Connector Location....93
Figure 86: On-Premises Software Hub at DSC 8500 Trunking RF Site.... 94
Figure 87: Discovery Configuration – Site/Network Discovery.... 164
Figure 88: DSC 8500 Fan Assembly.... 185
Figure 89: Fan Kit Retainer Lines and Card Cage Notch.... 186
Figure 90: Power Cord Connectors.... 187
Figure 91: DC Cables.... 187
Figure 92: Alarm Cable....187
Figure 93: PSU Chassis Grounding Cable.... 188
Figure 94: PSU Chassis Screws Location....188
Figure 95: Power Supply Units.... 189
Figure 96: Retrieving the PSU Blank Panel....189
Figure 97: Transceiver Module.... 194
Figure 98: Transceiver Card Cage....194
Figure 99: Power Amplifier I/O Connections....196
Figure 100: Site Preselector Filter (700/800)....198
Figure 101: Site Transmit Filter....199
Figure 102: Phasing Harness.... 201
Figure 103: 2-3 N-Way Combiner....203
Figure 104: 4-6 N-Way Combiner....204
Figure 105: 2-3 N-Way Splitter.... 205
Figure 106: 4-6 N-Way Splitter.... 205
Figure 107: RMC Cage for Site RMC and Cabinet RMC – Fully Populated....207
Figure 108: XCVR Combiner Bank Cable.... 238

List of Tables

Table 1: DSC 8500 Internal Site Alarm Input Port Pinout Definition.... 27
Table 2: DSC 8500 Serial Port Pinout Definition....27
Table 3: DSC 8500 Physical Parameters....28
Table 4: Cabinet RMC Rx Connections.... 34
Table 5: General Specifications for DBR M12 MultiCarrier Site for IV&D (700/800 MHz) 48
Table 6: Transmitter (Cabinet Output) Specifications for DBR M12 MultiCarrier Site for IV&D (700/800 MHz) 49
Table 7: Transmitter RF Distribution System for DBR M12 MultiCarrier Site for IV&D (700/800 MHz).... 49
Table 8: Receiver (Top of Cabinet) Specifications for DBR M12 MultiCarrier Site for IV&D (700/800 MHz) ... 50
Table 9: Receiver RF Distribution System for DBR M12 MultiCarrier Site for IV&D (700/800 MHz).... 50
Table 10: FCC Identification for DBR M12 MultiCarrier Site for IV&D (700/800 MHz) 51
Table 11: DBR M12 MultiCarrier Site Transmit Filter Specifications (700/800 MHz).... 51
Table 12: DBR M12 MultiCarrier Site Preselector Filter Specifications (700/800 MHz)....51
Table 13: Innovation Science and Economic Development Canada for DBR M12 MultiCarrier Site (700/800 MHz)....52
Table 14: DBR M12 MultiCarrier Site Receive Expansion Cable Length Specifications.... 52
Table 15: Site Receive Multi-Coupler/Low Noise Amplifier Specifications....53
Table 16: Cabinet Receive Multi-Coupler Specifications.... 53
Table 17: Activities for Site Preparation....72
Table 18: DC Power Connection Wire Gauge Maximum Distances for an IV&D Site.... 81
Table 19: Junction Panel Connections Description....84
Table 20: Top of Rack Site Controller Network Connections Configuration....85
Table 21: Optional AC Power Supply Unit Rear Connections.... 86
Table 22: Ports Required to Open in Firewall.... 95
Table 23: Active Directory Groups....114
Table 24: LDAP Server Configuration.... 115
Table 25: DC Plugin Versions....116
Table 26: ASR System Field Descriptions.... 120
Table 27: Subsite System Field Descriptions....120
Table 28: ASR Trunking Site Band Plan Field Descriptions....121
Table 29: ASR Trunking Site Zone Field Descriptions....122
Table 30: ASR Trunking Site – Site Field Description....124
Table 31: Subsite – Site Field Description.... 126
Table 32: Channel Field Descriptions.... 127
Table 33: Subsite Field Description.... 132
Table 34: DNS Name Servers for Devices in DSR and Non-DSR Sites....134

Table 35: GNSS Cable Length Delay Offset Value....136
Table 36: Security Alarms....144
Table 37: Discovery Type Parameters....165
Table 38: Actions Available in a Single Site Mode....170
Table 39: Actions Available in a Multisite Mode....173
Table 40: Available Recovery Actions....176
Table 41: DBR M12 MultiCarrier Site Field Replaceable Units....183
Table 42: Suggested DSC 8500 Troubleshooting Actions....210
Table 43: Suggested GPS Troubleshooting Actions....212
Table 44: Suggested Troubleshooting Actions for DSC 8500s with Extended Holdover Option....213
Table 45: Suggested Troubleshooting Actions for External Reference (PPS)....214
Table 46: Suggested Transceiver Troubleshooting Actions....215
Table 47: Suggested Troubleshooting Actions for Power Amplifiers....217
Table 48: Suggested Troubleshooting Actions for Transmit Banks....220
Table 49: Suggested Channel Troubleshooting Actions....222
Table 50: Suggested RF Modem Troubleshooting Actions....222
Table 51: Logon Suggested Troubleshooting Actions....224
Table 52: Suggested Troubleshooting Actions for On-Premises Software Hub....225
Table 53: DBR M12 MultiCarrier Site Expansion Scenarios....227
Table 54: XCVR Connections – Primary Receive Path....231
Table 55: XCVR Connections – Rx Diversity....231

List of Processes

Connecting GNSS Units to DSC 8500s 58
Preparing the Equipment for Installation 64
Verifying the DBR M12 MultiCarrier Site Security Configuration 143
Rolling Back the DSC 8500 Software Upgrade 177
Preparing the DSC 8500 Failed Software Upgrade Recovery 178
Deploying the DSC 8500 Software after Failed Software Upgrade 181
Configuring DSC 8500 After Disaster Recovery Software Installation 193
Installing the DBR M12 MultiCarrier Site Expansion Rack 227
Adding a Transmit Bank 234
Converting from a 2-3 N-Way System to a 4-6 N-Way System 236

List of Procedures

Assembling the GNSS Antenna 60
Mounting Cabinets or Racks to a Floor 75
Connecting Power to an AC Power Source 81
Installing On-Premises Software Hub on the Service Laptop 95
Installing On-Premises Software Hub on the NM Client 96
Verifying CSMS and Windows Supplementary Versions 97
Importing New Firewall Rules from CSMS Configuration Media 97
Pushing Updates to Endpoints 99
Importing the DSC 8500 Software Bundle 100
Discovering the Site 100
Connecting to the Site 101
Managing Trusted Hosts List 102
Collecting Action Logs 102
Logging On to the PCA for the First Time 105
Resetting SNMPv3 Passphrases to Default on DSC 8500 107
Setting Up PCA Users and Passwords 107
Deploying the DSC 8500 Software 109
Configuring SNMPv3 Passphrases on DSC 8500s for the MotoAdmin Account 111
Configuring SNMPv3 Passphrases on DSC 8500s for Other USM Accounts 112
Setting up the Account Policies 113
Configuring the Login Banner 114
Configuring Centralized Authentication for PCA Users 114
Verifying the Version of the Installed DC Plugin 116
Updating Groups in Active Directory and DNS Records 117
Updating DNS Records 118
Configuring the DBR M12 Trunking RF Site 119
Configuring the System 120
Configuring the Band Plan 121
Configuring the Zone 122
Configuring the Site 123
Configuring the Channels 127
Configuring the Subsite 132
Updating SysName in PCA 133
Updating DNS Servers in PCA 134
Updating NTP Servers in PCA 135
Configuring the GNSS Antenna 135

Configuring the DSC 8500 Switch 138
Enabling and Disabling a DSC 8500 Service Port with Local Access 139
Enabling/Disabling MAC Port Lockdown on the DSC 8500 140
Discovering the Hardware 140
Exporting the Site Configuration from the PCA 141
Importing the Site Configuration into the PCA 142
Enabling External Backup Power Supply Control 142
Managing SNMP Users from the PCA 145
Configuring the Auxiliary Inputs 146
Configuring DSC 8500 Active Directory Authentication 148
Updating the DSC 8500 Local User Account Password 149
Downloading DSC 8500 Logs 150
Encrypting DSC 8500 Logs and Network Captures 150
Downloading Network Captures 151
Restarting the DSC 8500 in PCA 152
Restarting the DSC 8500 from a Terminal 152
Resetting the PCA Password 153
Recovering the PCA Shared Accounts 154
Changing DSC 8500 BIOS Password 154
Configuring Syslog 155
Wiping the Software and Sensitive Data 156
Viewing the Port Security State on the DSC 8500 157
Capturing the MAC Address of Devices Connected to the DSC 8500 Ports 158
Aligning the Site Reference by Using the Frequency Counter 158
Aligning the Site Reference by Using the Service Monitor 160
Discovering Devices with the UNCW Discovery Wizard 161
Removing a Device from the Lost and Found Folder 163
Discovering Groups of Network Elements 163
Deleting Network Elements 165
Deleting Network Elements in UEM 166
Setting the Transmitter Power 167
Transferring Software to DSC 8500s for a Single Site 170
Upgrading the DSC 8500 Software for a Single Site 171
Transferring and Upgrading the DSC 8500 Software for a Single Site 172
Transferring Software to DSC 8500s for a Multisite 173
Upgrading DSC 8500 Software for a Multisite 174
Recovering the DSC 8500 Failed Software Upgrade 179
Finalizing the DSC 8500 Failed Software Upgrade 180
Replacing the Power Amplifier Fan Assembly 184

Replacing the Power Supply Unit Chassis 186
Replacing the Power Supply Unit 190
Replacing the DSC 8500 Site Processor 191
Deploying the DSC 8500 Software After the DSC 8500 Replacement 192
Replacing the Transceiver Module 193
Replacing the Power Amplifier 195
Replacing the Site Preselector 197
Replacing the Transmit Filter 199
Replacing the Phasing Harness (for Diplexer Function) 201
Replacing the N-Way Combiner 203
Replacing the N-Way Splitter 205
Replacing the RMC Modules 207
Troubleshooting the On-Premises Software Hub Failure to Start When the Port 49691 Is in Use 226
Deploying the DSC 8500 Software to the DBR M12 MultiCarrier Site Expansion Rack 228
Adding a Transceiver 229
Adding a Power Amplifier 229
Adding an XCVR Module 231
Adding a Cabinet RMC 232
Adding Receive Diversity 233
Configuring the Expansion Rack 239

About DBR M12 700/800 MHz RF Site Installation Guide

This manual provides information on the installation of the DBR M12 MultiCarrier Site.

Related Information

Related Information	Purpose
Authentication Services Feature Guide	Provides information relating to the implementation and management of the Active Directory (AD) service, Remote Authentication Dial-In User Service (RADIUS), and Domain Name Service (DNS) in ASTRO® 25 systems.
Core Security Management Server Feature Guide	Provides information relating to the implementation and management of Core Security Management Server (CSMS). The CSMS hosts network security software components in ASTRO® 25 systems. This manual also includes information about managing system-wide threat prevention along with information associated with security manager user interface hosted on the CSMS.
Virtual Management Server Software User Guide	Provides procedures for implementing and managing VMware ESXi-based virtual server hosts on the common Hewlett-Packard Enterprise hardware platform in ASTRO® 25 systems.
Provisioning and Configuration Agent User Guide	Provides a description of the Provisioning Manager application, including information on how to tailor this application for system use and how to provision ASTRO® 25 systems with various system-level, user-level, and device-level configuration parameters.

Chapter 1

DBR M12 MultiCarrier Site Description

The DBR M12 MultiCarrier Site is a complete, integrated solution of the RF equipment necessary for a highly fault tolerant, 700/800 MHz TDMA/FDMA P25 Trunking RF Site.

Supported system configurations:

- ASTRO® 25 Repeater Site
- Trunked IP Simulcast Subsystems

Supported trunked frequency bands:

- 800 MHz
- 700 MHz

1.1 DBR M12 MultiCarrier Site in an ASTRO Repeater Site

The DBR M12 MultiCarrier Site in an ASTRO® 25 repeater site is set up in a single trunked site, with one active control channel and a number of voice channels at the site, with a total of 28 channels. If packet data services are supported at the site, you can configure a number of voice channels with packet data channel capability. Voice traffic is routed to and from each channel (virtualized on a DSC 8500 and utilizing a transceiver) to the system for distribution to other sites and is repeated by the channel to support other local subscribers. However, data traffic is routed to the site controller. The site controller routes these packets upstream to the zone core for further processing and routing.

1.2 DBR M12 MultiCarrier Site in a Trunked IP Simulcast Subsystem

The RF channel (virtualized on a DSC 8500 and utilizing a transceiver) captures inbound signals through external receive (Rx) antennas from the subscriber/mobile radios and then amplifies, filters, and demodulates the signals into voice packets which are forwarded to a comparator.

The comparator processes the received voice packets for a particular call and forwards the best quality voice packets to the zone core, which routes them to the associated base radio at each remote site.

At a predetermined time, all RF channels transmit the voice packets simultaneously on the same frequency to complete the communication. You can install a maximum of 30 RF channels per a remote site.

1.3 DBR M12 MultiCarrier Site Components

The DBR M12 MultiCarrier Site consists of an open rack or cabinet that contains the following components:

- DSC 8500s
- Transceivers (XCVRs)

- MultiCarrier Power Amplifiers (MCPA)
- Transmitter (Tx) Radio Frequency Distribution System (RFDS) components (including an integrated Power Monitoring Unit (PMU))
- Receiver (Rx) RFDS components
- Fan modules
- Optional AC power supply shelf and modules
- Optional site routers

These modules and components (some of which may be shared among the carriers), provide the functionality necessary to support up to 12 transmit or receive carriers per cabinet or rack. Multiple cabinets or racks can be ordered (up to 3) to create a site with up to 28 channels or carriers (Site Repeater) or 30 channels (Simulcast).

Depending on the selected configuration options, the DBR M12 MultiCarrier Site rack or cabinet can have some or all of the modules shown in the following figure:

Figure 1: DBR M12 MultiCarrier Site Components

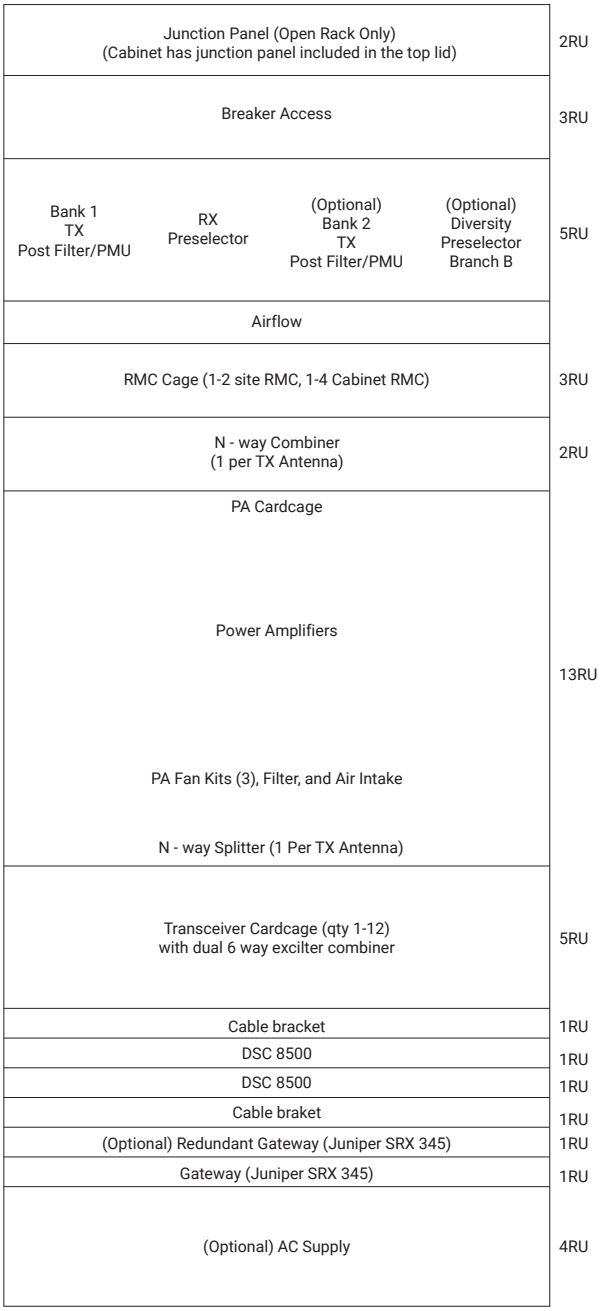

DSC 8500s

The DBR M12MultiCarrier Site has two DSC 8500s that are provided for redundancy. Each of the DSC 8500s is able to fully support 12 carriers. The DSC 8500s provide the following functionalities:

- Site reference, distributed to all components that require frequency or timing through the Ethernet PTP
- Optionally an integrated Rubidium that provides up to 72 hours of hold over in the event of GNSS loss
- DSP symbol and IQ data conversions
- Station, carrier, channel, and site control (hardware and software)

- Single point of contact for site configuration, service and maintenance in the Provisioning Configuration Agent (PCA)
- Network management
- Alarm I/O ports
- Site switch interface for:
  - Local service
  - Site router
  - XCVR – Frequency reference, timing, modulation, control, monitoring and alarming
  - MCPA – Frequency reference, control, monitoring and alarming
  - PMU – Monitoring and alarming
  - Auxiliary connections – Conventional Base Radios, and other site equipment

Tx and Rx Generation

The XCVRs provide for the receiver (RF to IQ data) and exciter (IQ data to small signal RF) conversions in the DBR M12 MultiCarrier Site. Each configured channel (Rx/Tx Frequency) is associated with an XCVR at the site. The association between channel and XCVR is determined automatically by the software to optimize the frequency spacing per bank, the distribution of priority channels (control capable channels), and to support the XCVR n+1 redundancy feature. The association is re-evaluated on a change of frequency, addition/removal of hardware at the site, or during the XCVR n+1 failover.

Tx Subsystem (Final Tx Amplification and Tx RFDS)

The MCPA bank accepts the combined low-level modulated RF signals from the XCVR modules of a given bank and amplifies them for transmission to the site transmit antenna through the N-Way combiner and the Tx post filter. The use of MCPAs eliminates the cavity combiners and the maintenance they require. Additionally, this architecture provides the following features:

- Tx-Tx spacing of 50 kHz (minimum) without the use of hybrid combining
- Remote frequency changes without an RF site visit
- Fault tolerance – the loss of one MCPA results in the loss of at most one Tx carrier
- Improved site level carrier availability over temperature

The following are the additional DBR M12 MultiCarrier Site transmitter sub-system configurations and features in the same cabinet or rack:

- Up to 12 Tx carriers on one Tx antenna (same band)
- Up to 12 Tx carriers on one Tx antenna (diplexed 700 and 800 MHz bands)
- Up to two sets of six Tx carriers with each set on a separate Tx antenna (same or different bands)
- An integrated PMU within the Tx post filter for each Tx antenna (measures composite Tx power)

For more information about the splitting and combining configurations involved in the transmit path, see DBR M12 MultiCarrier Site RFDS Transmit Path on page 44.

Rx RFDS

The DBR M12 MultiCarrier Site integrated RFDS provides a receive multicoupler (RMC) system that is optimized for the solutions that contain a tower top amplifier, and the solutions that do not, in both diversity and non-diversity configurations. The Rx RFDS includes the following components and features:

- Dual band (700/800 MHz) preselector for each Rx branch
- Active Site RMC modules with adjustable gain that support:

  - 1 primary rack or cabinet and 2 expansion rack/cabinets
  - RF fault tolerance
  - Alarms
  - Redundant power
- Passive Cabinet RMC modules that support up to twelve carriers per rack or cabinet

Rx RFDS supports:

- 30 Simulcast channels
- 28 Site Repeater channels
- 6 spare channels

Power Subsystem (DC and AC power)

The DBR M12 MultiCarrier Site employs a highly fault tolerant power system. When powered by a DC power source (built-in DBR M12 MultiCarrier Site configuration) a distributed DC architecture is utilized. This type of DC architecture offers the following features:

- Fault tolerance – single DC power source failure results in loss of at most one carrier.
- Reduces the number of FRUs necessary to support the DBR M12 MultiCarrier Site.

When the DBR M12 MultiCarrier Site is powered by an AC power source, an optional AC power supply can be ordered and field installed in the reserved space within the DBR M12 MultiCarrier Site rack or cabinet. This solution provides for n+1 redundancy where no carriers are lost in the event of a singular AC/DC power supply module failure.

For more information about the DBR M12 MultiCarrier Site power system, see DBR M12 MultiCarrier Site DC Power System on page 40 and DBR M12 MultiCarrier Site AC Power System on page 43.

1.3.1
DSC 8500 Physical Description

The DSC 8500 provides the station control and DSP operations of the individual RF channels assigned to a given rack/cabinet. Two DSC 8500 controllers are equipped in each rack/cabinet, but a single DSC 8500 can support all RF channels in the rack/cabinet it resides in. This arrangement aids in preventing a single point of failure.

The DSC 8500 also provides the RF Site controller and reference distribution functionality, also ensuring LAN connectivity and switching within the site. It also provides the time reference within the site and can be connected to a GNSS remote receiver, if already at the site.

Each DSC 8500 supports 14 digital inputs that can be monitored and configured to send fault management traps to registered fault managers. The 14 digital inputs are the pull to ground type, which can be driven by an open collector device that is capable of sinking 7 mA.

The DSC 8500 can be supplemented with an optional rubidium oscillator device to ensure an extended holdover in the event of GNSS signal loss.

Figure 2: DSC 8500 Front Panel

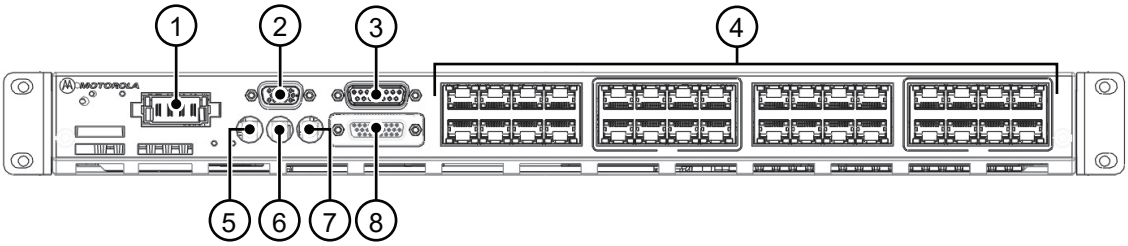

Item	Description
1	Power
2	PSU Alarm Inputs
3	GNSS
4	RJ45 ports
5	REF/1PPS IN (QMA connector)
6	10MHz OUT (QMA connector)
7	1PPS OUT (QMA connector)
8	Internal Site Alarm Inputs for General Purpose Fault Management

Figure 3: DSC 8500 RJ45 Ports at DBR M12 MultiCarrier Site

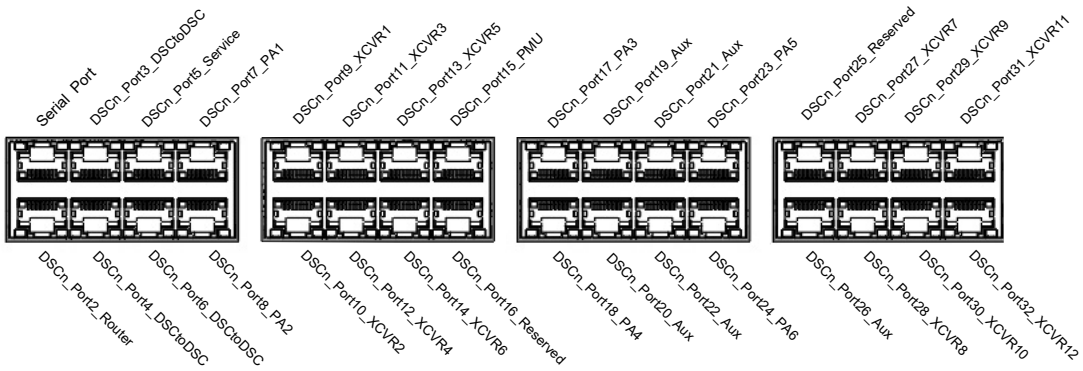

RJ45 Port	Description
DSCn_Port02_Router	100MbpsFullDuplex
DSCn_Port03_DSCtoDSC to DSCn_Port32_XCVR12	AutoNegotiate

Table 1: DSC 8500 Internal Site Alarm Input Port Pinout Definition

Pin	Function
Pin 1	Reserved
Pin 2	Reserved
Pin 3	Ground
Pin 4	Input Pin13
Pin 5	Input Pin10
Pin 6	Input Pin8
Pin 7	Input Pin6
Pin 8	Input Pin4
Pin 9	Input Pin2
Pin 10	Reserved
Pin 11	Ground
Pin 12	Ground
Pin 13	Input Pin14
Pin 14	Ground
Pin 15	Input Pin9
Pin 16	Input Pin7
Pin 17	Ground
Pin 18	Input Pin1 – Reserved for External Backup Power Supply Control
Pin 19	Reserved
Pin 20	Ground
Pin 21	Input Pin15
Pin 22	Input Pin12
Pin 23	Input Pin11
Pin 24	Input Pin5
Pin 25	Input Pin3
Pin 26	Input Pin0 – Reserved for External Backup Power Supply Control

Figure 4: Internal Site Alarm Input Pins for External Backup Power Supply Control

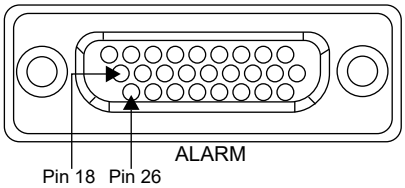

Table 2: DSC 8500 Serial Port Pinout Definition

Pin	Function
Pin 1	No connection

Pin	Function
Pin 2	No connection
Pin 3	No connection
Pin 4	Tx
Pin 5	No connection
Pin 6	No connection
Pin 7	Rx
Pin 8	Ground

Figure 5: DSC 8500 Front Panel LEDs and Buttons

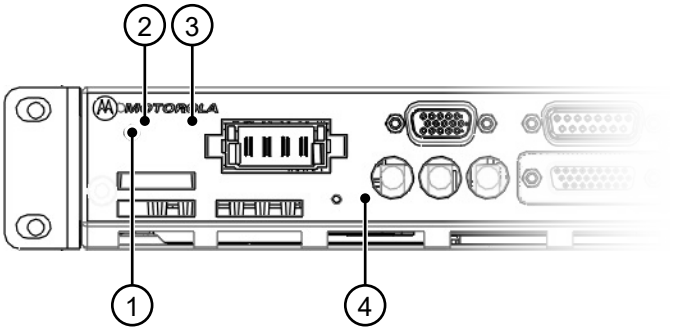

Item	Description	Status
1	Power button	Powers on and powers off the server board. A 1-second push/hold results in a graceful DSC 8500 shutdown. A 5-seconds push/hold results in a hard shutdown.
2	Power LED	ON: DSC 8500 board is powered up OFF: DSC 8500 board is powered off
3	Fan LED	GREEN: fans function properly RED: one or more fans failed
4	Status LED	GREEN: DSC 8500 functions properly AMBER: meaning is configurable in the Provisioning and Configuration Agent (PCA) RED: DSC 8500 failure

Table 3: DSC 8500 Physical Parameters

Parameter	Value
Width	441 mm (17.4 in.)
Depth	405.6 mm (15.97 in.)
Height	44.0 mm (1.73 in.)
Weight	7.5 kg (16.5 lb)

1.3.2
XCVR Physical Description

The XCVR provides for two functions. For the RF transmitter, it converts the digital IQ samples, to be modulated from the DSC 8500, to a low level modulated RF carrier that is ultimately amplified by the MCPAs. For the RF receiver, it converts the modulated RF carrier from each of the Rx inputs, to digital IQ samples that are decoded by the DSC 8500.

Figure 6: XCVR Front Panel LEDs and Ports

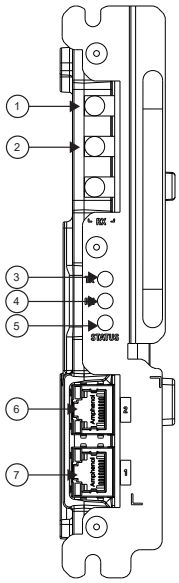

Item	Description	Status
1	RX 1	Receiver one RF input connection (QMA – female)
2	RX 2	Receiver two RF input connection (QMA – female)
3	Tx LED	SOLID GREEN: transmitter is keyed OFF: transmitter is not keyed
4	Rx LED	SOLID GREEN: receiving a qualified Rx carrier OFF: not receiving a qualified Rx carrier
5	Status LED	SOLID GREEN: XCVR is functioning properly SOLID AMBER: One of the two following conditions (not faults): ● XCVR waits for Hardware Discovery to be performed ● XCVR is not allocated/associated to a channel by the DSC 8500 FLASHING AMBER: XCVR is user disabled (not a fault) SOLID RED: One of the two following conditions: ● XCVR is booting (< 5 second duration immediately after power up) ● XCVR is in a fault condition
6	ENET 2	1000 Base-T Ethernet connection (RJ45 jack) to the DSC 8500
7	ENET 1	1000 Base-T Ethernet connection (RJ45 jack) to the DSC 8500

1.3.3

MCPA Physical Description

The MCPA amplifies the combined low level RF Tx carriers from the XCVRs of its respective bank to an RF power level suitable for the RF outbound coverage required.

Figure 7: MCPA Front Panel LEDs and Ports

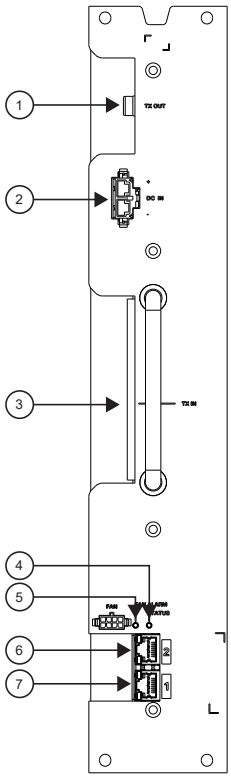

Item	Description	Status
1	TX OUT	RF output connection (QN – female)
2	DC IN	48VDC power system connection
3	TX IN	RF input connection (QMA – female)
4	Status LED	SOLID GREEN: MCPA functions properly SOLID AMBER: One of the two following conditions (not faults): ● MCPA waiting for Hardware Discovery to be performed ● MCPA is not enabled within its bank by the DSC 8500 FLASHING AMBER: MCPA is user disabled (not a fault) SOLID RED: One of the two following conditions: ● MCPA is booting (< 5 second duration immediately after power up) ● MCPA is in a fault condition
5	Fan Alarm LED	OFF: fan is functioning properly RED: fan failed

Item	Description	Status
6	ENET 2	100 Base-T Ethernet connection (RJ45 jack) to the DSC 8500
7	ENET 1	100 Base-T Ethernet connection (RJ45 jack) to the DSC 8500

1.3.4

RMC Physical Description

There are two types of Receive Multi-Couplers (RMCs) that are used in the DBR M12 MutiCarrier Site rack – the site and the cabinet RMCs.

The site RMC takes the receive signal from the preselector, amplifies it, and splits it to cabinet RMCs. The cabinet RMCs may be in the same physical rack, or in the expansion racks at the same site.

The cabinet RMCs take the receive signal from the site RMC and split it among XCVRs in the rack.

The cabinet RMCs may be in the same, physical rack, or in the expansion racks at the same site.

Figure 8: Fully Populated RMC Cardcage

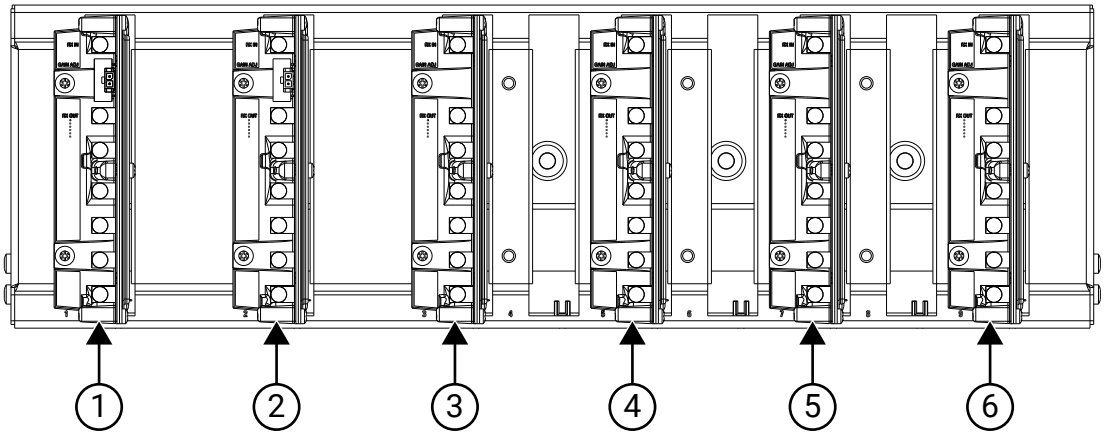

Annotation	Description
1	Site RMC connected to the first preselector.
2	Site RMC installed if there are two preselectors with Rx diversity.
3	Cabinet RMC 1, always populated, connects to the site RMC 1.
4	Cabinet RMC 2, used in racks with Rx diversity, connects to site RMC 2.
5	Cabinet RMC 3, used in racks with more than 6 XCVR, connects to site RMC 1.
6	Cabinet RMC 4, used in racks with more than 6 XCVR and Rx diversity, connects to the site RMC 2.

Figure 9: Site RMC

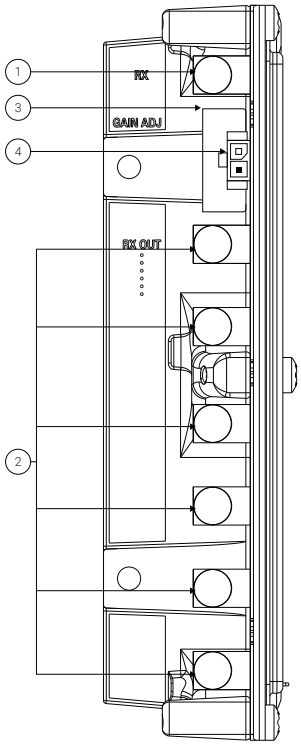

Annotation	Description
1	Rx In
2	Rx Out 1-6
3	Gain DIP Switch
4	RMC Alarm Connector

The site RMC Rx In must always come from a preselector. Site RMC Rx out 1 and 2 must connect to the cabinet RMC in the same rack. The site RMC Rx out 3-6 must go to the cabinet RMC in the expansion racks at the site.

For more information about the gain settings and alarm, see RMC Attenuation Configuration on page 86.

Figure 10: Cabinet RMC

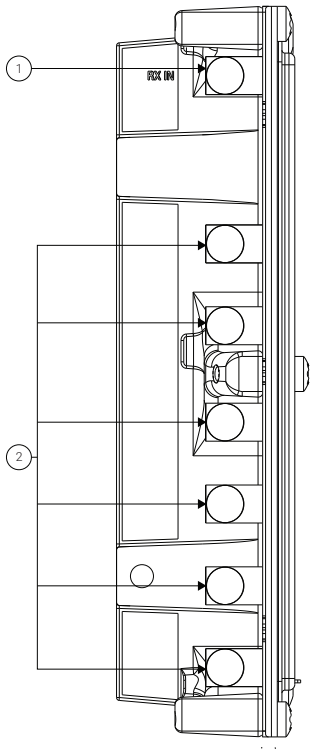

Annotation	Description
1	Rx In
2	Rx Out 1-6

The cabinet RMC Rx In must always come from a site RMC. Cabinet RMC Rx Out 1-6 must go to XCVR within the rack.

For more information about the cabinet RMC Rx connections, see the following table:

Table 4: Cabinet RMC Rx Connections

Item	Rx Out Connection
Cabinet RMC 1	XCVR 1-6 Rx 1
Cabinet RMC 2	XCVR 1-6 Rx 2
Cabinet RMC 3	XCVR 7-12 Rx 1
Cabinet RMC 4	XCVR 7-12 Rx 2

1.3.5
N-Way Combiner Physical Description

The DBR M12 MultiCarrier Site rack has two types of N-Way combiners, the 2-3 N-Way combiner and the 4-6 N-Way Combiner.

Figure 11: 2-3 N-Way Combiner

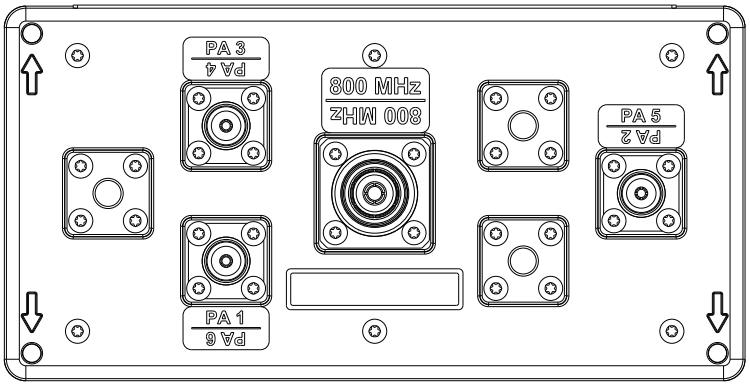

Figure 12: 2-3 N-Way Combiner on Bracket

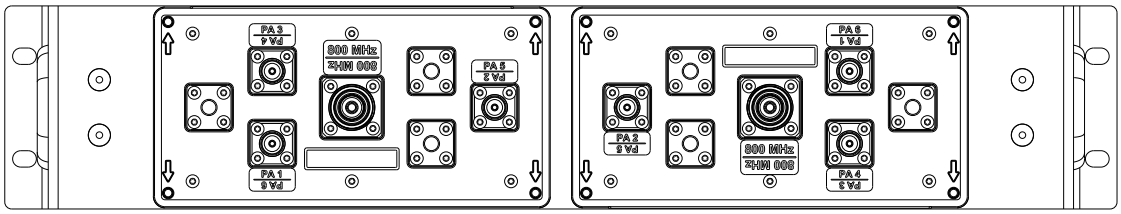

Figure 13: 4-6 N-Way Combiner

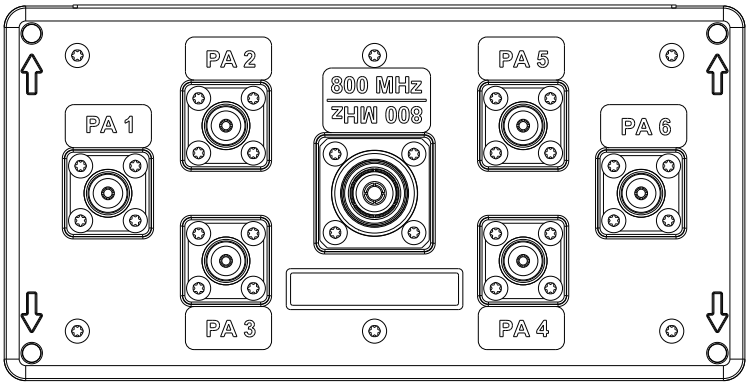

Figure 14: 4-6 N-Way Combiner on Bracket

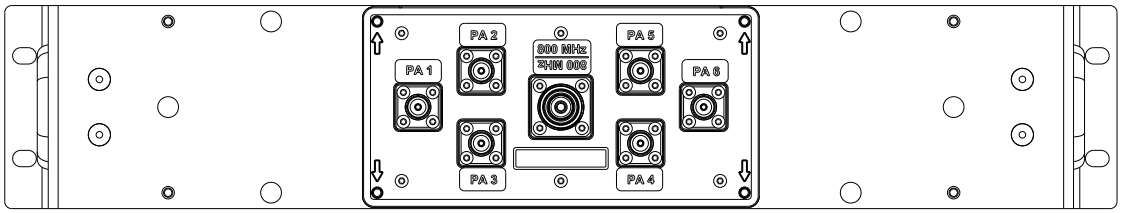

The combiners take TX out from each power amplifier (PA), combine the signal, and connect to the post filter. The functionality of the 2-3 N-Way combiner and the 4-6 N-Way combiner is the same. The only difference between the two combiners is the number of power amplifiers that can be connected to them.

Each rack can support up to two 2-3 N-Way combiners or one 4-6 N-Way combiner.

WARNING: An RF Phasing cable must be connected to each input of the N-Way combiner at all times, even if there is no associated PA for that connection. Removing a phasing cable when the site is powered on can cause damage to the equipment. Cables for non-populated PAs must be placed in through the locating features in the PA blank panels.
AVERTISSEMENT: Un câble de phase RF doit être connecté à chaque entrée du combineur N-Way à tout moment, même s'il n'y a pas d'amplificateur de puissance (AP) associé à cette connexion. Retirer un câble de phase lorsque le site est sous tension peut provoquer des dommages à l'équipement. Les câbles pour les AP non occupés doivent être placés par l'entremise des fonctions de localisation dans les panneaux vides de l'AP.

The center 4.3-10 connector on the N-Way combiner connects to the post filter. Each QN connector is connected to the PA associated with the label next to the connector, or connected to a cable with its other end placed behind the blank panel that corresponds to that PA.

1.3.6
N-Way Splitter Physical Description

The DBR M12 MultiCarrier Site rack has two types of N-Way splitters, the 2-3 N-Way splitter and the 4-6 N-Way splitter.

The N-Way splitters take the combined XCVR output and split it to each Power Amplifier (PA). The functionality of the 2-3 N-Way splitter and the 4-6 N-Way splitter are the same. The only difference between the two splitters is the number of PAs that can be connected to them.

Each rack can support up to two 2-3 N-Way splitters or one 4-6 N-Way splitter.

On each board the connectors labeled as XCVR Bank A and XCVR Bank B are connected to the XCVR Combiner board in the XCVR card cage. Each connector labeled as MCPA X is connected to the corresponding PA.

Figure 15: 2-3 N-Way Splitter

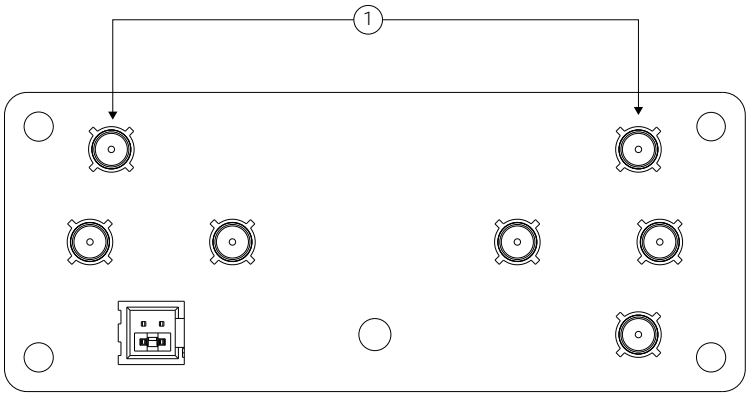

Annotation	Description
1	Coax jumper connection. The 2-3 N-Way splitter contains a coax jumper that must to be connected to these connectors. In the 2-3 N-Way splitter there is a 2 pin jumper in place on the header that must be placed as shown. If the 2-3 N-Way splitter is used as the splitter for a second bank, it must be removed.

Figure 16: 2-3 N-Way Splitter on Bracket

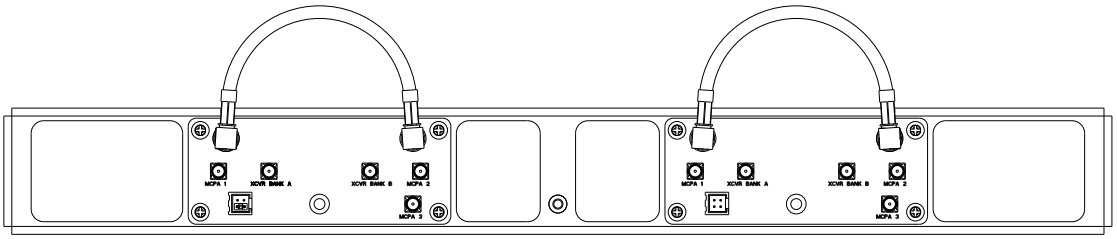

Figure 17: 4-6 N-Way Splitter

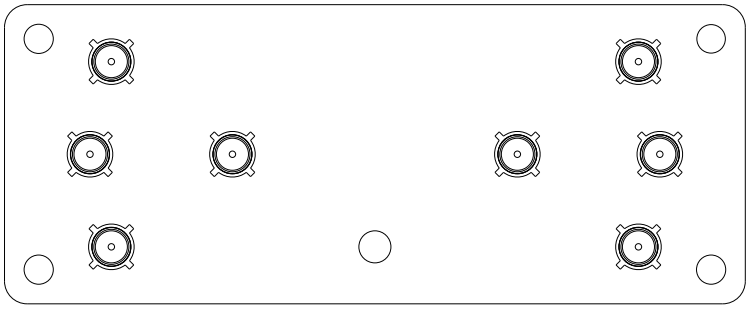

Figure 18: 4-6 N-Way Splitter on Bracket

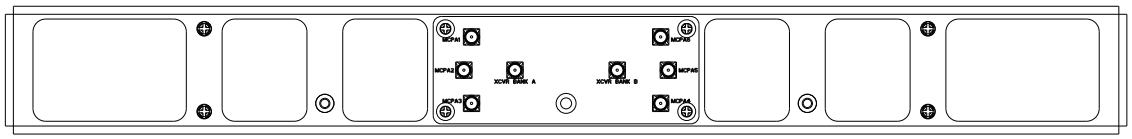

WARNING: An RF Phasing cable must be connected to each input of the N-Way splitter at all times, even if there is no associated PA for that connection. Removing a phasing cable when the site is powered on can cause damage to the equipment. Cables for non-populated PAs must be placed in through the locating features in the PA blank panels.

1.3.7

RFDS Physical Description

The Radio Frequency Distribution System (RFDS) section of the DBR M12 MultiCarrier Site Rack contains Tx filters and Rx preselectors.

Figure 19: RFDS Tray – Fully Populated

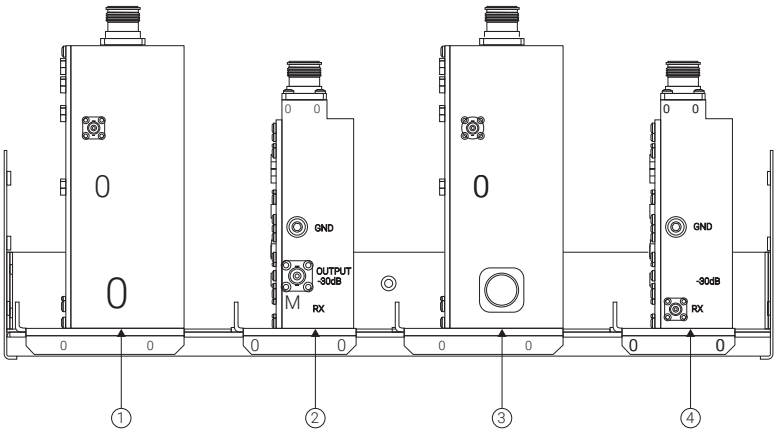

Annotation	Description
1	Tx post filter
2	Rx preselector
3	Tx post filter for a second bank
4	Rx preselector for Rx diversity

All racks contain at least one TX post filter. Expansion racks can contain an Rx preselector, depending on the number of receive antennas present at a site. A second Rx preselector is used for configurations with receive diversity. A second Tx post filter is used when there are two transmit banks, and two transmit antennas.

Figure 20: Tx post filter

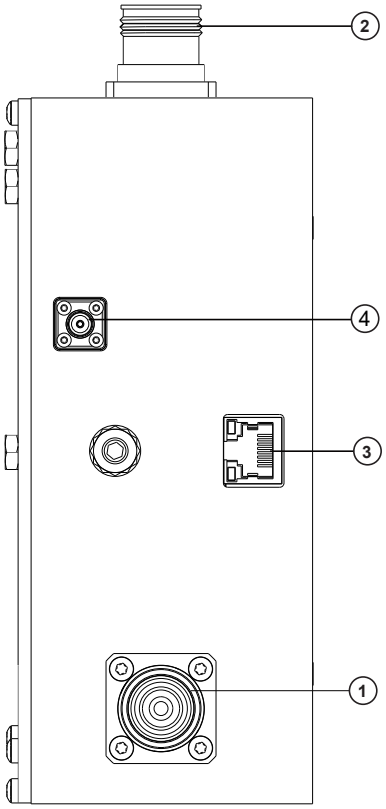

Annotation	Description
1	Tx connection from combiner (4.3-10)
2	Tx to antenna (4.3-10)
3	Power monitor (Ethernet connection)
4	30dB coupled output (QMA)

The transmit filter removes any remaining noise in the receive sub-band between the combiner and the transmit antenna. The transmit band pass filter has a built-in power monitor on the output for monitoring the antenna system voltage standing wave ratio (VSWR) and the composite transmitter output power in reference to the top of the DBR M12 MultiCarrier Site cabinet/rack. The composite transmitter output power and VSWR can be viewed in the Provisioning and Configuration Agent (PCA). Additionally, the VSWR alarms are routed to the infrastructure as they occur.

The transmit filter is either 768–776 MHz or 851–870 MHz.

The Tx post filter is band-dependent. There are two versions, one for the 700 MHz and one for the 800 MHz range. A rack can contain both bands if it is set up as a split bank.

Tx post filter 1 connects to a 4-6 N-Way combiner, or a 2-3 N-Way combiner for a single or split bank configuration. Tx post filter 2 only connects to a 2-3 N-Way combiner in a split bank configuration.

The 30dB coupled output allows you to see the composite filtered output spectrum of the DBR M12 transmitter subsystem.

Figure 21: Rx Preselector

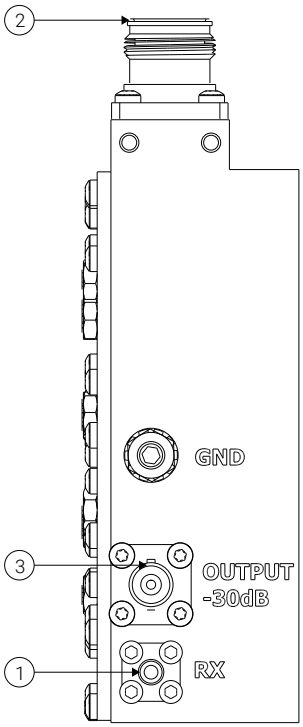

Annotation	Description
1	Rx out to site Receive Multi-Coupler (RMC) (QMA)
2	Tx to antenna (4.3-10)
3	30dB coupled output (BNC)

The Rx preselector covers both the 700 MHz and the 800 MHz range. Only one preselector is required even if there is both a 700 MHz range and 800 MHz range transmit bank in the same rack.

The first preselector connects its Rx output to the site RMC 1. If there is Rx diversity, the second preselector connects to the site RMC 2.

The 30dB coupled output allows you to monitor the composite filtered input spectrum to the DBR M12 MultiCarrier Site receiver subsystem.

1.3.8
DBR M12 MultiCarrier Site DC Power System

The DC power is the default configuration of the DBR M12 MultiCarrier Site, unless the optional AC power supply (T8926A) is ordered.

The DBR M12 MultiCarrier Site employs a distributed DC architecture (there is no central DC supply). The DC-DC converters are distributed throughout the DBR M12 MultiCarrier Site that galvanically isolates and regulates the input 48 VDC power source connection (+/- 43.2-60 VDC). The DC-DC converters are located in each of the Multi-Carrier Power Amplifiers (MCPAs), Transceivers (XCVRs), and components of the distributed DC architecture in the DSC 8500.

This type of DC architecture offers high availability and reduces the number of FRUs necessary to support the DBR M12 MultiCarrier Site. The following are the selected functionalities of the DC architecture:

- Each MCPA has its own breaker.
- Each fan is powered by one of two MCPAs.
- Each router has a separate breaker.
- Each DSC 8500 has a separate breaker.
- Each XCVR is powered by one of the two DSC 8500s.
- Each Receive Multi-Coupler (RMC) (site and cabinet) is powered by one of the XCVRs (up to twelve XCVRS can be present).

Figure 22: DC Architecture

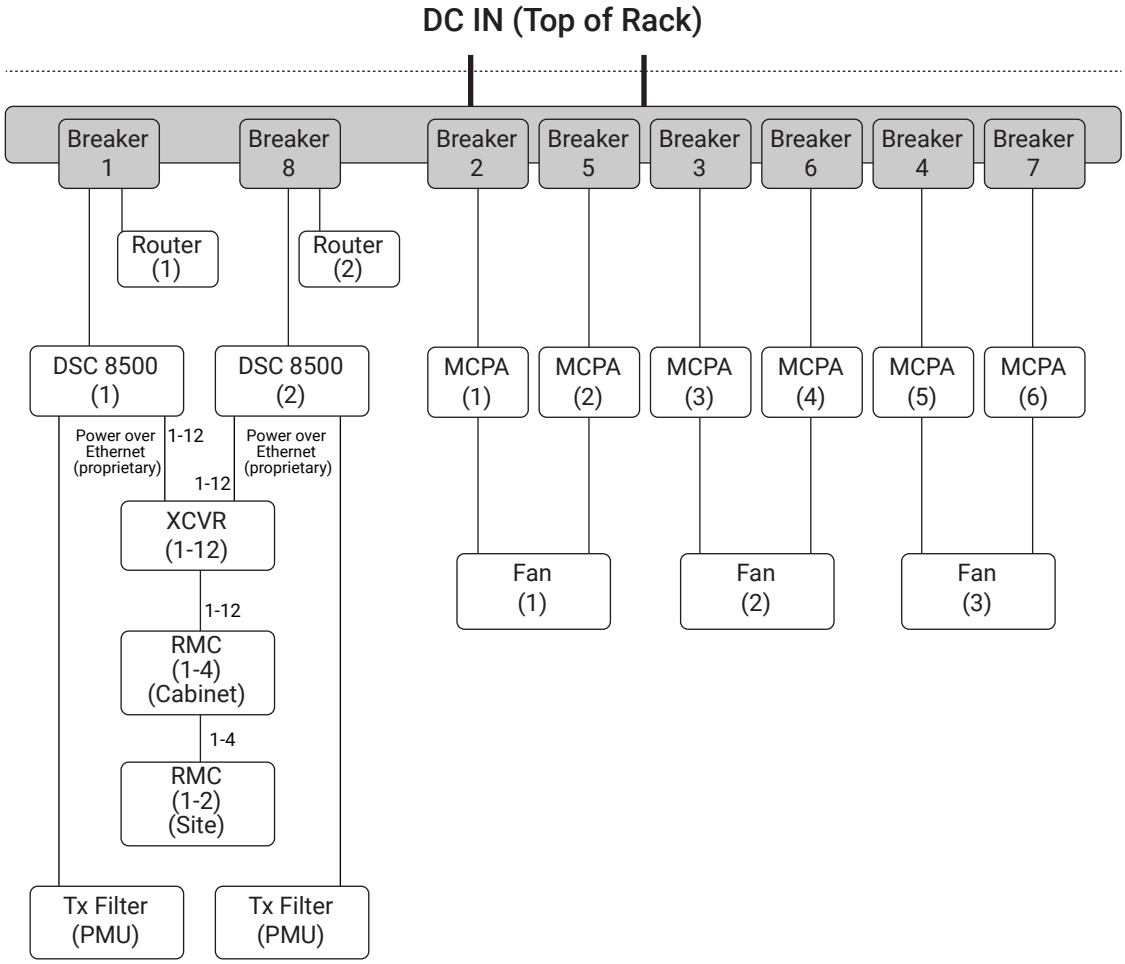

The DBR M12 MultiCarrier Site is galvanically isolated (floating ground) and may be connected to either a positive or negative grounded 48 VDC power source. Wire colors and schemes may differ, depending on the power ground reference or regional codes, but the polarity does not change. Regardless of power system ground reference, positive is positive, and negative is negative, and connection should be completed to that polarity.

DC Power Connections

For more information about the DC power connection, see Breaker Recommendations on page 54 and DC Power Connection Wire Gauge Calculations for Integrated Voice and Data on page 80.

The rack/cabinet is designed with two DC inputs to receive DC power from either a single DC source or from two separate DC sources. The default configuration is for power to be received from a single DC source through the two DC inputs.

If power system redundancy from the two separate DC sources is desired, then you must remove the DC jumper bridging the two DC inputs into the rack/cabinet. The noted jumper is located on the underside of the rack/cabinet breaker rail.

NOTE: You should only consider removing the DC jumper for rack/cabinets that are configured for two transmitter banks. Removing the DC jumper allows XCVRs 1-6, MCPAs 1, 3, and 5, and the bottom DSC 8500 to receive power from one DC source. The balance of the XCVRs, MCPAs, and DSC 8500 receives power from the other DC source.
This perfect split of the MCPA, XCVR, and DSC 8500 resources can not be achieved with a rack/cabinet configured for a single transmitter bank. Because of that, the DC jumper must remain in place for rack/cabinets configured for a single transmitter bank.

The top of the rack/cabinet contains two sets of terminal blocks for the purposes of reducing the current supplied through any one set of DC input cables to a value within the rating of the DC cables maximum size (1 AWG) and/or minimizing voltage drops.

NOTE: The terminal block screws must be tightened within the range of 6Nm and 8Nm.

For racks/cabinets loaded with modules to support the maximum carrier capacity, both pairs of DC feeds must be installed to the power distribution subsection.

WARNING: Disconnect all Power before servicing. Multiple power sources may be present. Failure to do so may cause property damage, personal injury or death.
AVERTISSEMENT: Débranchez toute alimentation avant l'entretien. Plusieurs sources d'alimentation peuvent être présentes. Ne pas le faire peut entraîner des dommages matériels, des blessures ou la mort.

Figure 23: Junction Panel in DBR M12 MultiCarrier Site (Open Rack Version – Top View)

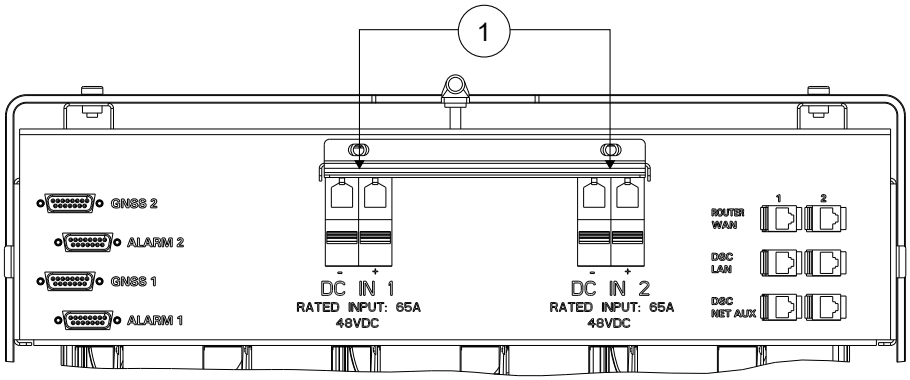

Annotation	Description
1	DC Input Terminal Block Pairs

Figure 24: Power Input Distribution in DBR M12 MultiCarrier Site (Open Rack Version – Side View)

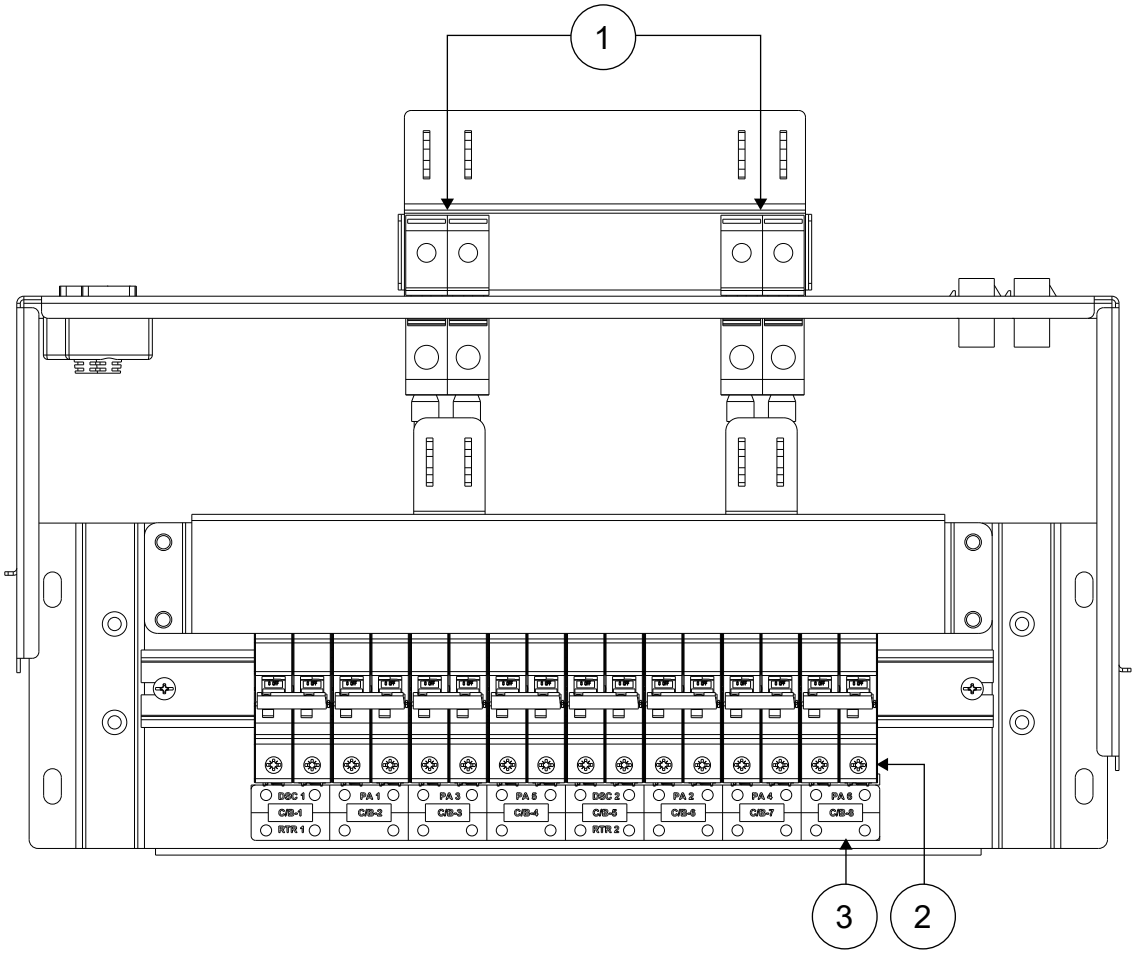

Annotation	Description
1	DC Input Terminal Block Customer Input Side
2	Breakers
3	Breaker Module Label

1.3.9

DBR M12 MultiCarrier Site AC Power System

An optional DBR M12 MultiCarrier Site AC Power Supply (T8926A) can be used to convert the AC power at the site to the DC power. The outputs of the DBR M12 MultiCarrier Site AC Power Supply connect to the DC power inputs at the top of the rack. For more information about the connections, see DBR M12 MultiCarrier Site DC Power System on page 40 and Connecting Power to an AC Power Source on page 81.

This option provides two power shelves that can support up to three 1300W AC/DC power supply modules each.

Figure 25: DBR M12 MultiCarrier Site Power Shelves

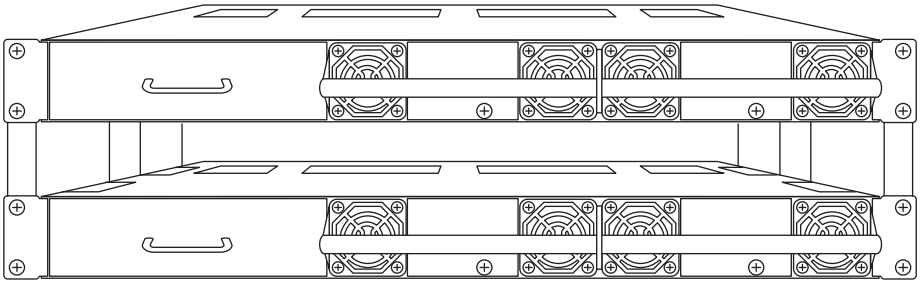

The DBR M12 MultiCarrier Site AC Power Supply is a separate component that is shipped separately. The integration must be done in the field or in staging at the reserved, open space, at the bottom of the rack.

The DBR M12 MultiCarrier Site AC Power Supply supports n+1 redundancy so that no carriers are lost in the event of a singular AC/DC power supply module failure. To ensure that the correct number of AC/DC power supply modules are present to support the n+1 redundancy, see *Multicarrier Site Design Tool* and *DBR M12 MultiCarrier Site Ordering Guide*.

IMPORTANT: Ensure that an alarm is generated in the event of an AC/DC power supply module failure. The alarm outputs of the DBR M12 MultiCarrier Site AC Power Supply must be wired to the alarm inputs of the DSC 8500 (and configured in the PCA), MC-EDGE RTU or SDM 3000 RTU. A second AC/DC power supply module failure can power down an entire DBR M12 MultiCarrier Site rack or cabinet.

1.4
DBR M12 MultiCarrier Site RFDS Transmit Path

The DBR M12 transmitter does not use cavity combiners or lossy hybrid combiners to achieve power combining. The power combining is accomplished before the high power amplification and followed by bank(s) of highly linear MultiCarrier Power Amplifiers (MCPAs) that amplify the already combined carriers.

The transmit path of the RFDS includes the following equipment:

- Transceiver's (XCVR) exciter:
  - Up to 12 in a single transmitter bank configurations (one Tx antenna)
  - Up to 6 per bank in configurations with two transmitter banks (two Tx antennas)
- 2 XCVR backplanes, each combining 6 XCVRs
- 4-6 N-Way splitter:
  - Up to 12 carriers in a bank
- 2-3 N-Way splitter:
  - Up to 6 carriers in a bank (with one bank, 6 carriers per rack or cabinet in total)
  - Up to 6 carriers in a bank (with two banks, 12 carriers per rack or cabinet in total)
- MCPAs:
  - 5-6 MCPAs in the 4-6 N-Way configuration
  - 3 MCPAs per bank in the 2-3 N-Way configuration
- 4-6 N-Way combiner:
  - Up to 12 carriers in a bank
- 2-3 N-Way combiner:

Up to 6 carriers in a bank (with one bank, 6 carriers per rack or cabinet in total)
Up to 6 carriers in a bank (with two banks, 12 carriers per rack or cabinet in total)

- Transmit post filter with integrated Power Monitoring Unit (PMU) (one per transmitter bank) that measures the composite transmitter carrier power of a given bank
- Diplexer Phasing Harness that combines a 700 MHz bank and an 800 MHz bank into one Tx antenna

NOTE: The PMU functionality is not supported in configurations that employ the Diplexer Phasing Harness.

Figure 26: One Bank (Same Band)

One Tx Antenna is used for all Tx carriers.

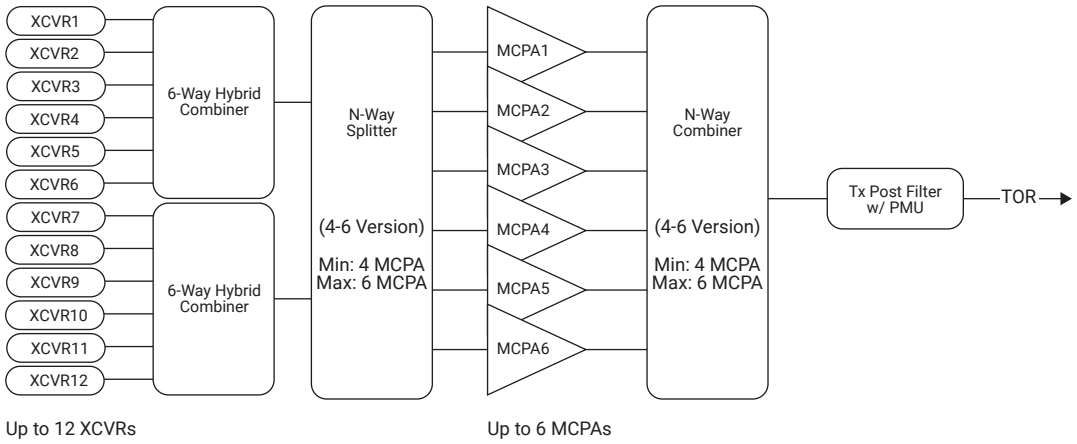

Figure 27: Two Banks (Same or Different Bands)

Two Tx Antennas are used to lower the Tx carrier count per one Tx antenna.

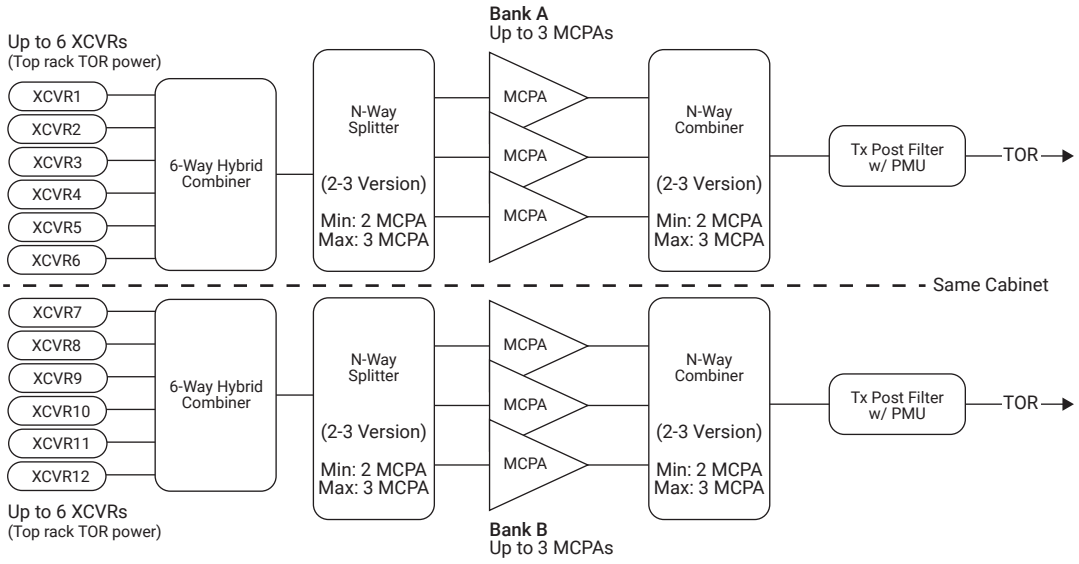

Figure 28: Two Banks with Diplexer Phasing Harness (Different Bands)

One Tx Antenna is used for all Tx carriers.

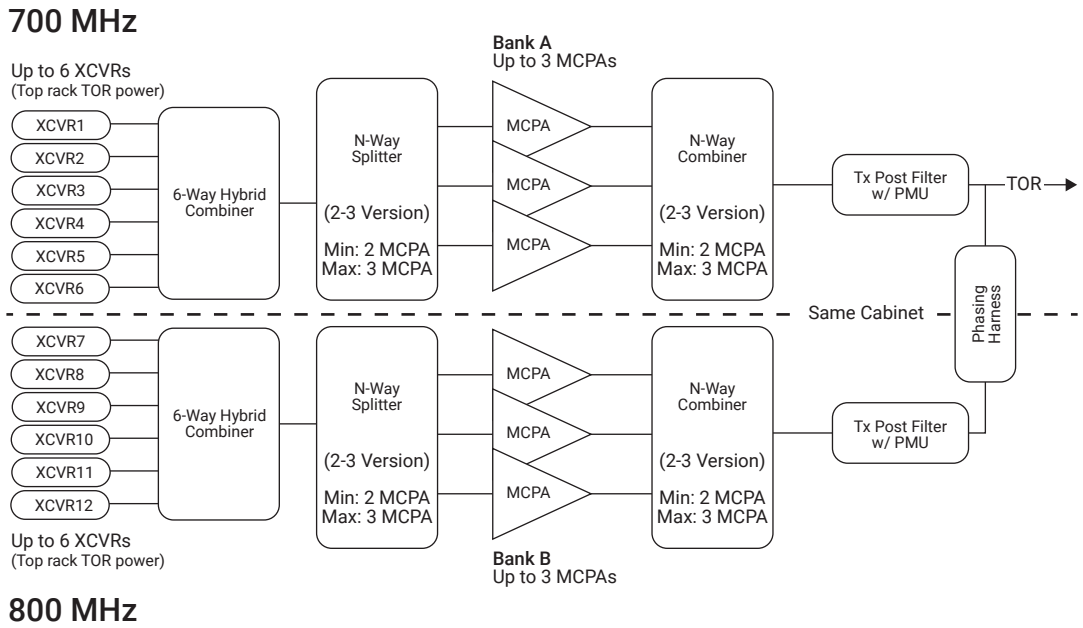

Figure 29: Top of Rack Power for Different Transmitter Configurations

One Bank - 1 to 12 channels with 1 Tx antenna

D-Series	Single Transmit Antenna											
Tx Carriers	1	1-2	1-3	1-4	1-5	1-6	1-7	1-8	1-9	1-10	1-11	1-12
Power per carrier (W)	37	37	37	37	37	37	37	37	37	37	32	29

Example 1:
Carriers 1 through 8 **each** deliver 37 Watts to ToR

Example 2:
Carriers 1 through 12 **each** deliver 29 Watts to ToR

Two Banks (with or without diplexing) - 1 to 12 channels with 2 Tx antennas or 1 Tx antenna diplexed

D-Series	Transmit Antenna 1						Transmit Antenna 2					
Tx Carriers	1	1-2	1-3	1-4	1-5	1-6	1-7	1-8	1-9	1-10	1-11	1-12
Power per carrier (W)	40	40	40	40	40	40	40	40	40	40	40	40

1.5

DBR M12 MultiCarrier Site RFDS Receive Path

The receive path of the RFDS includes the following equipment for 700/800MHz:

Site Preselector

Provides signal filtering for the inbound signal. RF input and output connectors on the front of the device are connected to the antenna feed and a Receive Multi-Coupler (RMC). An port for monitoring the input spectrum is also provided.

Site Receive Multi-Couplers/Low Noise Amplifiers

Each receive path includes an RMC or Low Noise Amplifier (LNA) with a balanced amplifier and a 6-way splitter that can be used to distribute inbound signaling to multiple expansion racks. RF input and output connectors on the front of the device are connected to the preselector and the cabinet RMC.

Cabinet Receive Multi-Couplers

Provide a 6-way splitter used to distribute inbound signaling to the base radios to complete the receive path. RF input and output connectors on the front of the device are connected to the Site RMC and the XCVR.

The Tower Top Amplifiers (TTAs) are only present if supplied by your organization.

Figure 30: DBR M12 MultiCarrier Site Receive Path (700/800 MHz)

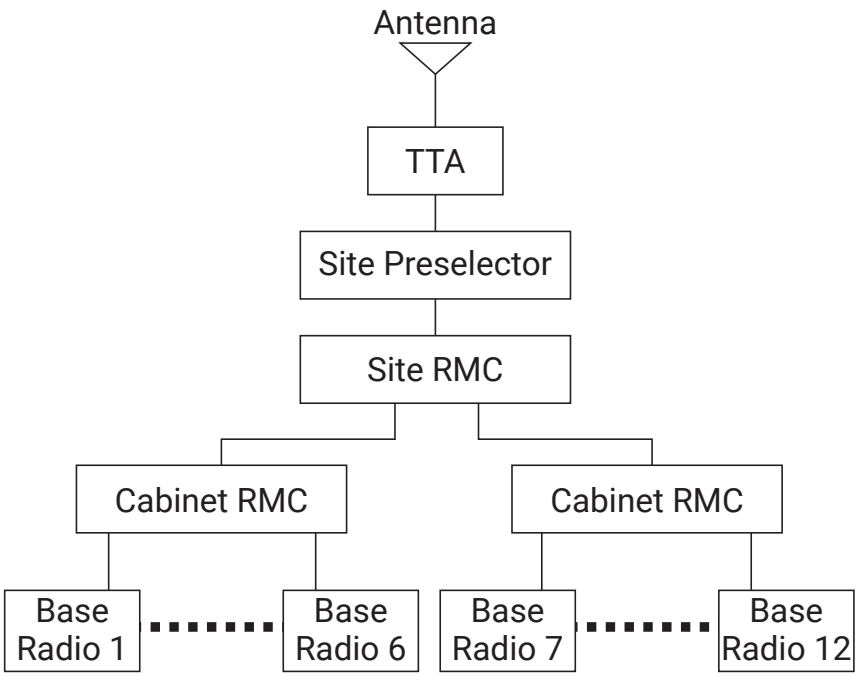

1.6

DBR M12 MultiCarrier Site Specifications

The TIA specifications for the base radio include the following Methods and Performance recommendations:

Phase 1 (includes Linear Simulcast):

- Methods: TIA-102.CAAA-F, "Project 25 Digital C4FM/CQPSK Transceiver Measurement Methods" September 2021
- Performance: TIA-102.CAAB-E, "Project 25 Land Mobile Radio Transceiver Performance Recommendations, Digital Radio Technology, C4FM/CQPSK Modulation", September 2021

Phase 2:

- Methods: TIA-102.CCAA-C, "Project 25 Two-Slot Time Division Multiple Access Transceiver Measurement Methods", July 2022

- Performance: TIA-102.CCAB-B, "Project 25 Two-Slot Time Division Multiple Access Transceiver Performance Recommendations", July 2022.

IMPORTANT: Specifications are subject to change without notice.

1.6.1
Specifications for DBR M12 MultiCarrier Site for Integrated Voice and Data (700/800 MHz)

Table 5: General Specifications for DBR M12 MultiCarrier Site for IV&D (700/800 MHz)

General Specifications	
Model Number	SQM01SUM0338A
Maximum Number of Channels	12
Height	
Cabinet Version:	84.8 in. (215 cm) 43 Rack Units
7.5 ft. Open Rack Version:	90.4 in. (230 cm) 48 Rack Units
7 ft. Open Rack Version:	84.3 in. (214 cm) 44 Rack Units
Footprint (W x D)	
Cabinet Version:	23.5 x 23.5 (60 x 60 cm)
Open Rack Version:	20.5 x 23.5 in. (52 x 60 cm)
Weight (fully configured with gateways)	
Cabinet Version:	660 lbs (300 kg)
7 Foot Open Rack Version:	500 lbs (227 kg)
7.5 Foot Open Rack Version:	510 lbs (231 kg)
Temperature Range, Operating	
Open Rack:	-22 to 140 °F (-30 to 60 °C)
Cabinet with Doors:	-22 to 140 °F (-30 to 60 °C)
Temperature Range, Storage	-40 to 185 °F (-40 to 85 °C)
Operating Altitude	Up to 1800 meters (5900 ft.) above mean sea level Above 1800 meters (5900 ft.), the derating is 1.5 °C/km (0.8 °F/1000 feet) Maximum operational altitude is 5000 meters (16900 ft.)
Power Supply Input	DC: 43.2–60 VDC AC: 90-264 VAC, 47-63 Hz (Optional T8926A)
Power Consumption – (2-40 W, 12 carriers) (without gateways)	
DC:	C4FM, H-DQPSK, LSM: 4700 W max.
AC (Optional T8926A):	C4FM, H-DQPSK, LSM: 5400 W max.

General Specifications	
Power Consumption – (2-40 W, 12 carrier) (with gateways)	
DC:	C4FM, H-DQPSK, LSM: 4800 W max.
AC (Optional T8926A):	C4FM, H-DQPSK, LSM: 5500 W max.
Power Supply Type	Switching
Input/Output Impedance	50 Ohms
Antenna Connector Types	Tx: 4.3-10 Female Rx: 4.3-10 Female
Channel Spacing	12.5/25 kHz
Transmit Combiner Spacing	50 kHz
Frequency Stability	• Repeater Site*: 100 ppb/2yr or GPS synchronized • Simulcast (multisite): GPS synchronized
Frequency Generation	Synthesized

Table 6: Transmitter (Cabinet Output) Specifications for DBR M12 MultiCarrier Site for IV&D (700/800 MHz)

Transmitter Specifications: Including RFDS	
Frequency Range	768-776, 851-870 MHz
Average power output per channel	2-40 W (w/2-3 N-Way, 1-6 channels) 2-37 W (w/ 4-6 N-Way, 1-10 channels) 2-32 W (w/4-6 N-Way, 1-11 channels) 2-29 W (w/4-6 N-Way, 1-12 channels)
Modulation Fidelity	5%
Spurious and Harmonic Emissions Attenuation	75/90 dB
Modulation	C4FM, LSM, H-DQPSK
Emissions Designators (Mid-Power, 700/800 MHz)	8K70D1E, 8K70D1D, 8K70D1W 8K10F1E, 8K10F1D, 8K10F1W 9K80D7E, 9K80D7D, 9K80D7W
Adjacent Channel Power Ratio	
12.5 kHz offset, 6 kHz BW:	67 dB
Intermodulation Attenuation	80 dB

Table 7: Transmitter RF Distribution System for DBR M12 MultiCarrier Site for IV&D (700/800 MHz)

Transmitter RF Distribution System Specifications	
Frequency Range	768–776, 851–870 MHz
Insertion Loss (50 kHz spacing)	0.64 dB typ

Table 8: Receiver (Top of Cabinet) Specifications for DBR M12 MultiCarrier Site for IV&D (700/800 MHz)

Receiver Specifications, including RFDS	
Frequency Range	796-825 MHz
Modulation	C4FM, H-CPM
Digital Sensitivity 5% Bit Error Rate Static (BER)	
C4FM:	-123.5 dBm
H-CPM:	-121.5 dBm
Faded Sensitivity 5% Bit Error Rate (BER)	
C4FM:	-116 dBm
Intermodulation Rejection	80 dB
Digital Adjacent Channel Rejection	60 dB
Spurious and Image Response Rejection	100 dB
Blocking Immunity	100 dB
Signal Displacement Bandwidth	1 kHz
Intermediate Frequencies	
1st:	73.35 MHz
2nd:	2.16 MHz
Electronic Bandwidth	Full Bandwidth
Conducted Spurious	-57 dBm
Bit Error Rate Floor	0.01%

Table 9: Receiver RF Distribution System for DBR M12 MultiCarrier Site for IV&D (700/800 MHz)

Receiver RF Distribution System Specifications		
Frequency Range	796–825 MHz	
	Typical	**Limit**
Noise Figure	3.5 dB	5 dB
Gain	10 dB	-21 to 31 dB adjustable
3rd Order Output Intercept	18 dB	
Amplifier Intercept		39 dBm
Preselector Bandwidth	792–825 MHz	
RF Input Connector Type	QMA	
RF Output Connector Type	QMA	

Table 10: FCC Identification for DBR M12 MultiCarrier Site for IV&D (700/800 MHz)

FCC Identification			
Frequency Range	**Type**	**Power Output**	**Type Acceptance Number**
851–870 MHz	Transmitter	2-40 W	ABZ89FT5901

Table 11: DBR M12 MultiCarrier Site Transmit Filter Specifications (700/800 MHz)

	Tx Filter Spec Limit (700/800 MHz)	Typical	Notes
Frequency Range	762–776 MHz, 851–870 MHz		
Insertion Loss (700 or 800 MHz filter)	0.5 dB	0.3 dB	
Port Return Loss	14 dB	17 dB	
Rx Selectivity	60 dB		
RMS Input Power	650 W		
Peak Instantaneous Power	32k W		
Passive Intermodulation	–135 dBc		2 x 43 dBm
RF Connector Type	Tx connection from combiner (4.3-10)		
Power Monitor Unit (PMU) Accuracy	+/- 10% (20–600 W), +/- 20% (1–20 W)		
Power Monitor Connector Type	RJ45 Ethernet		
Forward and Reflected Power Range	0–650 W		

Table 12: DBR M12 MultiCarrier Site Preselector Filter Specifications (700/800 MHz)

	DBR M 12 RF Site Preselector Spec Limit (700/800 MHz)	Typical
Frequency Range	792–825 MHz	
Insertion Loss	1 dB	0.8 dB
Return Loss	14 dB	17 dB
Tx Selectivity	75 dB	
Test Port Coupling	–30 dB	
Input Connector (Antenna)	4.3-10 female	
Output Connector	QMA female	
Test Port Connector	BNC	

DBR M12 MultiCarrier Site RFDS Elevation Derating

Above 3000 meters (9800’), the peak power derating for the Tx RFDS is 1dB/1km (0.3 dB/1000ft). So at 5000 meters (16400’) full power is limited to 9 carriers.

1.6.1.1

DBR M12 MultiCarrier Site Innovation Science and Economic Development Canada (700/800 MHz)

Table 13: Innovation Science and Economic Development Canada for DBR M12 MultiCarrier Site (700/800 MHz)

ISED Approval Number	Frequency Range	Type	Power Output	Hardware Version Identification Number (HVIN)
109AB-T5901	Tx 851-869 MHz Rx 806-824 MHz	LSM	Variable 2-40 Watts (average)	T8899-800
109AB-T5901	Tx 851-869 MHz Rx 806-824 MHz	C4FM	Variable 2-40 Watts	T8899-800

1.6.2

DBR M12 MultiCarrier Site Receive Expansion Cable Length Specifications

The receive expansion cables connect the expansion cabinets and are not provided. To achieve a good balance between all receivers, it is recommended to maintain the lengths within ±50% of the values listed in the following table. A nominal of 1dB is recommended.

Table 14: DBR M12 MultiCarrier Site Receive Expansion Cable Length Specifications

Cable Type	Length (ft)	Length (m)
EnviroFlex™ EF142	7	2.1
1/4" Superflex or equivalent	18	5.4
3/8" Superflex or equivalent	26	8
1/2" Superflex or equivalent	29,5	9

1.6.3

Receive Multi-Coupler/Low Noise Amplifier(RMC/LNA) and Multi-Coupler (RMC) Specifications (700/800 MHz)

Table 15: Site Receive Multi-Coupler/Low Noise Amplifier Specifications

Item	Site RMC/LNA Specification Limit	Site RMC/LNA Typical
Frequency Range	796-825 MHz	
Attenuator Range	0-31 dB	
Default Attenuator Setting (Factory preset)	0 dB	
Default Gain (Factory preset)	21.5 dB	23 dB
Noise Figure	1.7 dB	1.4 dB
Third Order Output Intercept		29dBm
Input Connector Type	QMA	
Output Connector Type	QMA	
VSWR max (All ports)	1.5 : 1	

Table 16: Cabinet Receive Multi-Coupler Specifications

Item	Cabinet RMC Specification Limits	Cabinet RMC Typical
Frequency Range	796-825 MHz	
Attenuator Range	N/A	
Default Attenuator Setting	N/A	
Default Gain	-9.6 dB	-10 dB
Noise Figure	9.6 dB	10 dB
Third Order Output Intercept		100dBm
Input Connector Type	QMA	
Output Connector Type	QMA	
VSWR max (All ports)	1.5 : 1	

Chapter 2

DBR M12 MultiCarrier Site Equipment Installation

This chapter provides procedures necessary to install the DBR M12 MultiCarrier Site equipment.

2.1 Breaker Recommendations

This section provides information about the rack/cabinet configuration that yields the greatest current draw. That is, racks/cabinets loaded with modules to support 12 carriers transmitting at full rated output power, the receive diversity option, the site router option, and the DSC 8500 rubidium option.

The top of the rack/cabinet contains two sets of terminal blocks to accept the DC feed line sets. Both of these feed line sets are required to reduce the current supplied through any one set of DC input cables to a value within the rating of the DC cable's maximum size (1 AWG) or reasonably limiting the voltage drop of the two feed line sets.

The breaker recommendations for two 1 or 2 AWG feed line sets that feed the two terminal blocks are as follows:

- Site installation must include a current interrupting device (fuse or circuit breaker) on each of the two feed line sets supplying the two terminal blocks.
- The current interrupting device for each of the two feed line sets should be 85A.
- For more information about the sizing of cables and the DC power distribution in installations utilizing rack/cabinet configurations with lesser current draw, see the *Standards and Guidelines for Communication Sites* manual.

2.2 Cabling Requirements

Diagrams for cabling are typically included in the system-specific configuration documentation Motorola Solutions provides.

Also see the Motorola Solutions *Standards and Guidelines for Communication Sites* manual for cabling standards.

IMPORTANT: System certification was completed using shielded cables. To prevent emission problems, use only shielded cables. Do not substitute other cable types.

- Position the equipment to avoid excessive tension on cables and connectors. Cables must be loose with absolutely no stress on the connectors. Careful cable routing and securing the cables with tie wraps (or other devices) is one way to provide this protection. Set up preventive maintenance loops.
- Dress the cables neatly using cable ties. Do not tighten the cable ties until you are sure that the required service length and bend radius requirements are met. Leave cable ties loose enough to allow adjustment.
- Verify that all cables are properly labeled to match system-specific configuration documentation Motorola Solutions provided.

- Ensure that cables do not exceed the minimum bend radius as outlined in the Motorola Solutions manual for cabling standards.

CAUTION: Use only Category 5e Shielded Twisted Pair (or higher) for cabling Ethernet connections. Motorola Solutions has engineered this system to meet specific performance requirements. Using other cabling and connectors may result in unpredictable system performance or catastrophic failure.
ATTENTION: Utilisez uniquement une paire torsadée blindée de catégorie 5e (ou supérieure) pour le câblage des connexions Ethernet. Motorola Solutions a conçu ce système pour répondre à des exigences de rendement particulières. Utiliser d'autres câblages et connecteurs peut entraîner une performance imprévisible du système ou une panne catastrophique.

For more information on cabling guidelines, see the documentation supplied with components from each equipment manufacturer.

2.2.1
DBR M12 MultiCarrier Site Grounding

In the DBR M12 MultiCarrier Site, each module, or each card cage that contains multiple modules, is grounded to the rack grounding bar by the use of 6 AWG ground bond cables. The rack grounding bar must be connected to the master grounding bus bar by 2 gauge, 75C rated wire (capable of 170A single conductor) per NEC table 310.15(B)(17).

Ground conductor must be connected with the included Panduit LCC2-14A-Q crimp lugs. Crimp connections must be made in accordance with Panduit instructions and by using only the approved tools and dies.

The supplementary grounding bus bar must be connected to the master grounding bus bar by 2 gauge, 75C rated wire (capable of 170A single conductor) per NEC table 310.15(B)(17)

If a cabinet enclosure is used, you must create a connection from the cabinet top to the #2 wire by using an inline splice, #6 AWG wire, a 5/8" spacing double right angle lug, (Panduit LCC6-14AWF-L or equivalent UL rated crimp lug) and the two studs that use the M5 nuts.

If the site grounding system is below the rack instead of above the rack, all #6 AWG ground bonding cables must be rerouted or reversed to connect below each chassis and connection point on the equipment with accordance to R56 guidelines for cable dressing and bend radius requirements. New #6 AWG cables for the RFDS filter elements are required to connect all modules connected to the supplementary ground bus bar to the main grounding bus bar instead. These cables are not provided or available as a standard, and must be procured or fabricated separately.

For more information about the Panduit instructions, see https://www.panduit.com/content/dam/panduit/en/products/media/1/51/051/7051/111357051.pdf.

For more information about the approved tools and dies, see https://www.panduit.com/content/dam/panduit/en/products/media/4/04/804/3804/100863804.pdf.

2.3

Floor Mounting

Open Rack

Figure 31: Open Rack Floor Mounting Detail

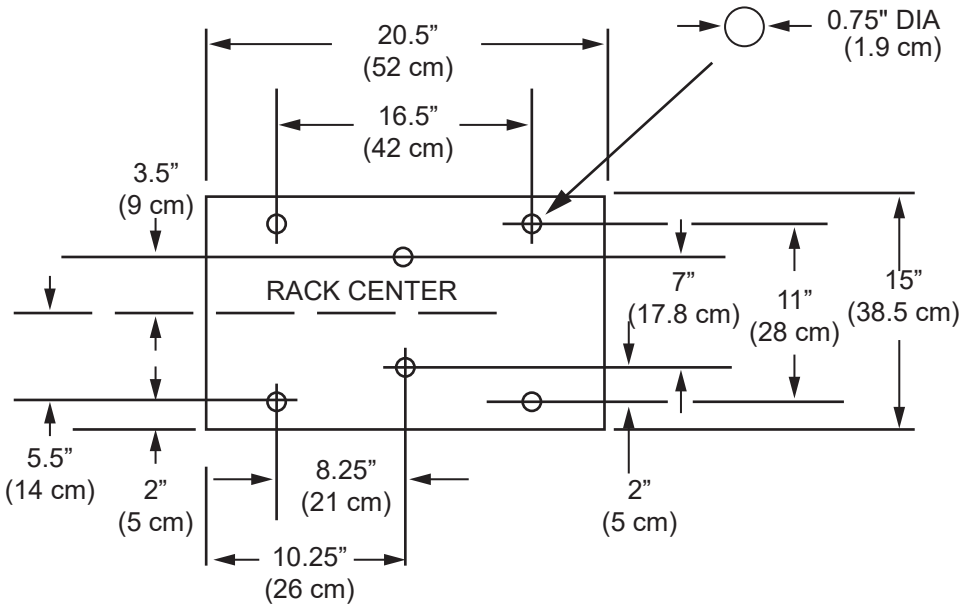

Figure 32: Open Rack – Side View

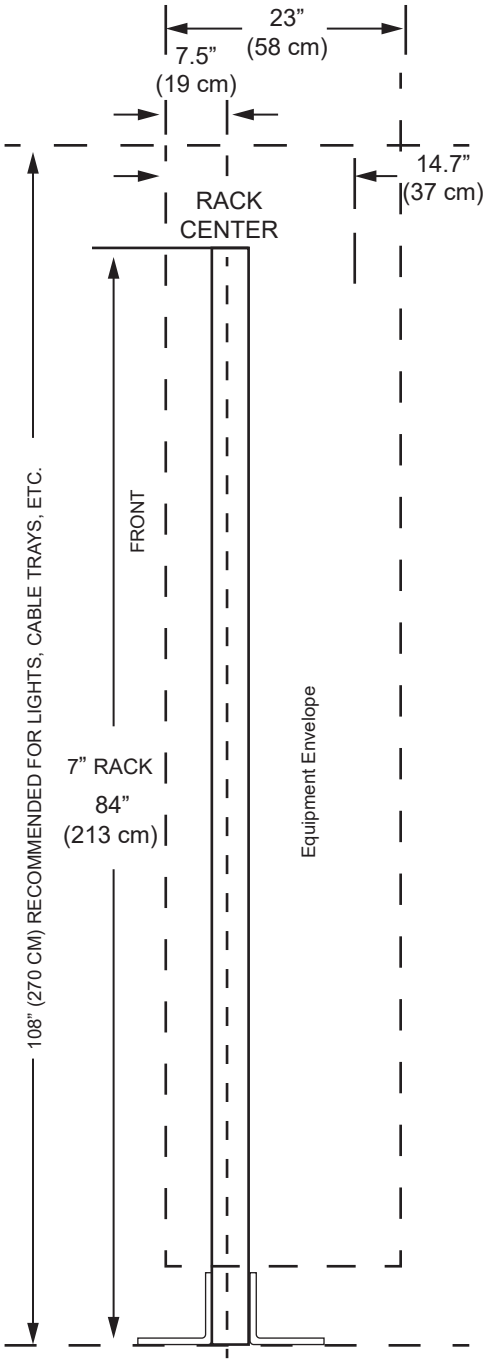

Cabinet

Figure 33: Cabinet Floor Mounting Detail

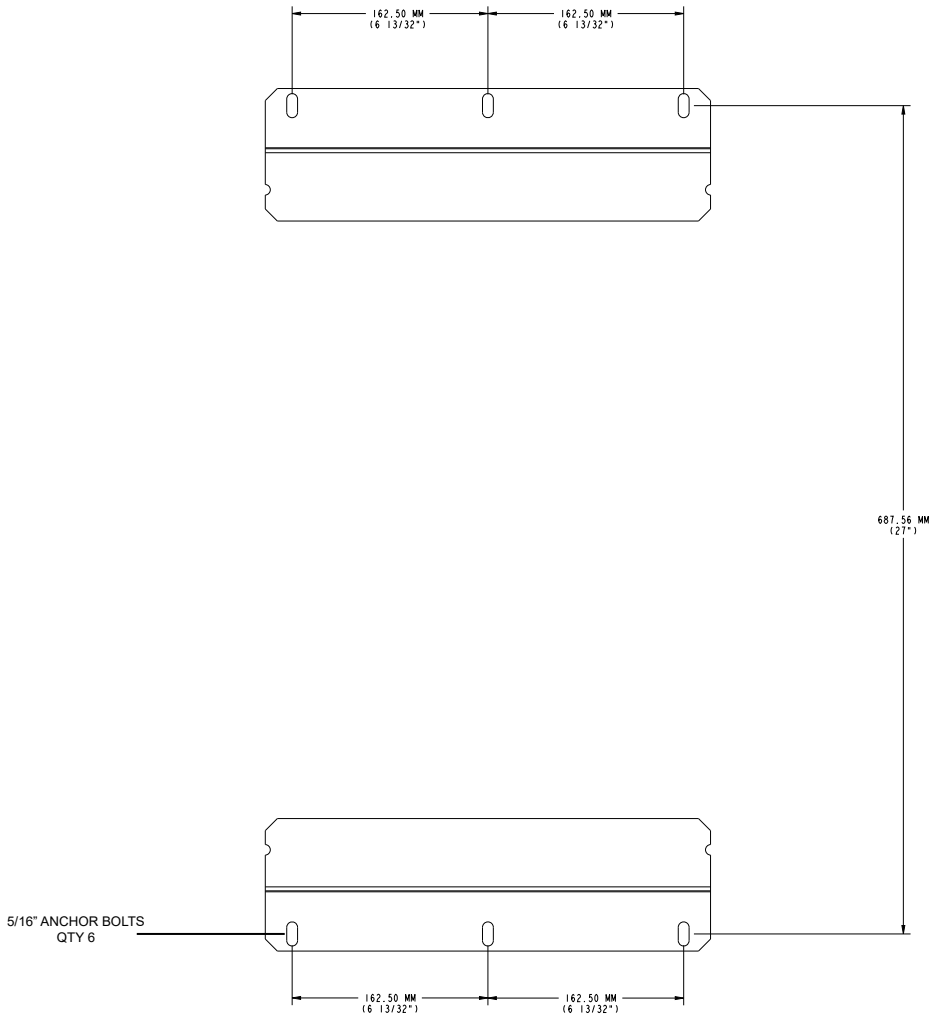

2.4

Frequency Reference Connection

The DBR M12 MultiCarrier Site is a fully integrated solution with an option to interface to GPS receivers. You can add redundant rubidium frequency references to provide an extended holdover on GPS signal loss.

It is recommended that new sites utilize these new capabilities as they save space and power at the site.

2.5

Connecting GNSS Units to DSC 8500s

The GNSS units must be mounted with an unrestricted aerial down view to within ten degrees of the horizon in all directions.

The GNSS units must be mounted high enough so they have an un-obstructed view of the sky. Adjacent structures (such as trees, buildings, and antenna towers) are considered obstructions. If an un-obstructed view is not possible, you must install the GNSS units so they have a clear view of the appropriate sky region.

Adjacent antenna towers at the RF site which protrude into the required region have a minimal effect on GNSS unit reception due to their narrow, largely open profiles and are not considered obstructions.

- For northern hemisphere installations, an un-obstructed view of the southern sky must be maintained.
- For southern hemisphere installations, an un-obstructed view of the northern sky must be maintained.

You must isolate the GNSS units from RF interference by mounting the units at a distance of at least 3.66 m (12 ft) horizontally from the other units.

Process:

1. Assemble the GNSS antenna. See Assembling the GNSS Antenna on page 60.
2. Connect the lighting arrestor to the GNSS antenna cable.

   For information on the lightning arrestor, see GNSS Lightning Arrestor on page 62.
3. Validate the correctness of the position information (latitude, longitude, elevation) reported by the GNSS antenna.

   Proper timing operation is dependent on proper position identification.
4. Connect the GNSS antenna cable to the GNSS port on the DSC 8500.
5. In the Provisioning and Configuration Agent (PCA), discover the GNSS antenna. See Discovering the Hardware on page 140.
6. In the PCA, configure the GNSS antenna. See Configuring the GNSS Antenna on page 135.

2.5.1

Assembling the GNSS Antenna

You can use this procedure to assemble a Global Navigation Satellite System (GNSS) antenna in a trunking system.

Figure 34: PMUG1018A GNSS Antenna Assembly – Exploded View

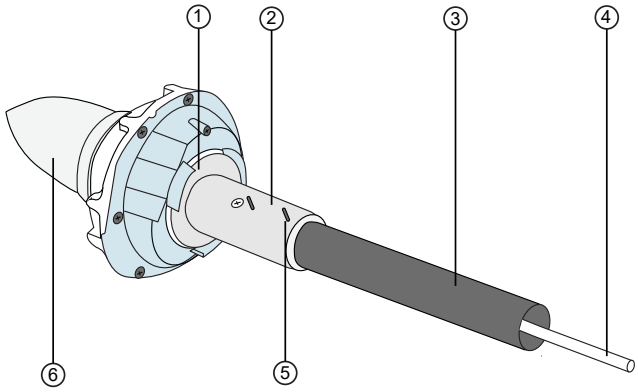

Annotation	Description
1	M4 screw
2	Collar bracket
3	1" ID Schedule 40 Aluminum pipe
4	GNSS antenna/receiver to site controller cable
5	M3 set screw
6	GNSS antenna assembly

The following part numbers are valid for the relevant elements:

GNSS Antenna Assembly
PMUG1018A

Mounting Pole (aluminum pipe)
DSP04268

Wall Mount Brackets for GNSS Timing Antenna
DSWM4

GNSS Antenna/Receiver to DSC 8500 Cable

- CB001133A05 (125 ft)
- CB001133A01 (350 ft)

Prerequisites:
Verify that you have a 1.5 mm Allen wrench, a T20 and T40 screwdrivers, and a Phillips screwdriver.

Procedure:

1. Run the digital cable through the mounting pole and collar bracket. Attach the digital cable connector to bottom of the antenna module (Male to female Hirose Connector).

Figure 35: PMUG1018A GNSS Antenna Assembly – Cable

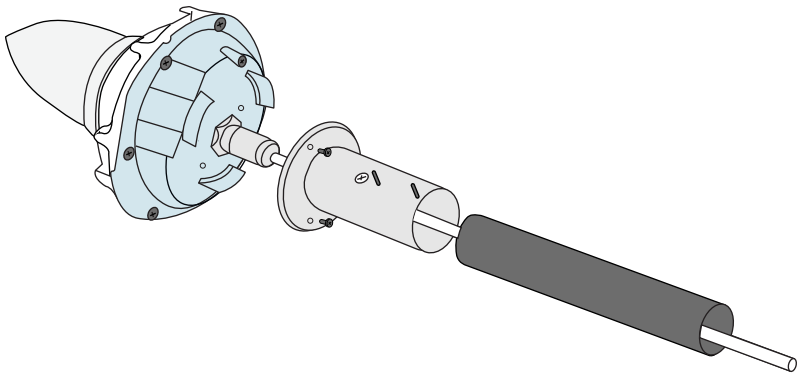

2. Align three bracket screw holes with the GNSS antenna bottom mounting holes and screw the collar bracket to the bottom of the antenna module by tightening the three M4 screws to 10 in-lb with the T20 bit screwdriver.

   Figure 36: PMUG1018A GNSS Antenna Assembly – Collar Bracket

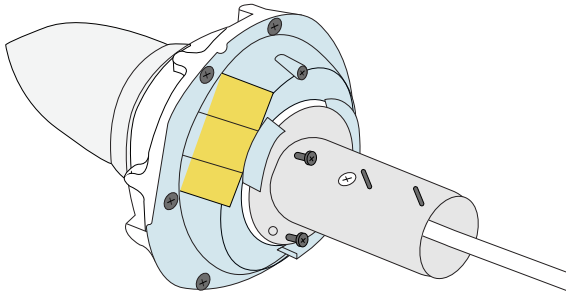

3. Fix the mounting pipe to the mounting bracket by tightening the two M3 set screws to 5 in-lb by using a 1.5 mm hex driver or an Allen key.

   NOTE: To prevent damage to the screw thread, do not overtighten the M3 screws.

   Figure 37: PMUG1018A GNSS Antenna Assembly – Securing the Pipe

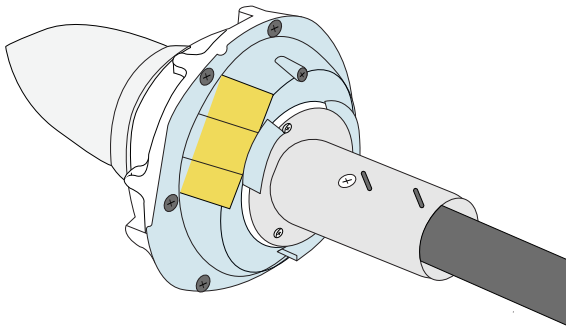

4. Attach the mounting pipe to the support structure by using wall mount brackets (DSWM4) or a suitable pole mount hardware.
5. Attach the 6 gauge grounding cable to the antenna module by tightening a T6 screw using a T40 screwdriver.

Figure 38: PMUG1018A GNSS Antenna Assembly – Grounding Cable

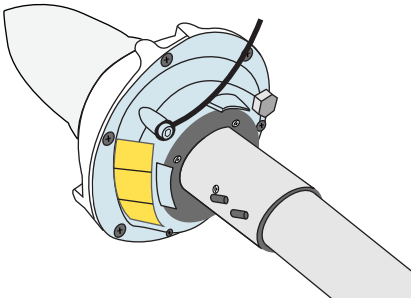

2.5.2 GNSS Lightning Arrestor

A lightning arrestor must be installed between a DSC 8500 and the Global Navigation Satellite System (GNSS) antenna.

One GNSS antenna is connected to each of the DSC 8500. Each GNSS unit requires its own arrestor.

The following figure shows the connections between the lightning arrestor and the DSC 8500.

Figure 39: Lightning Arrestor – System Connections

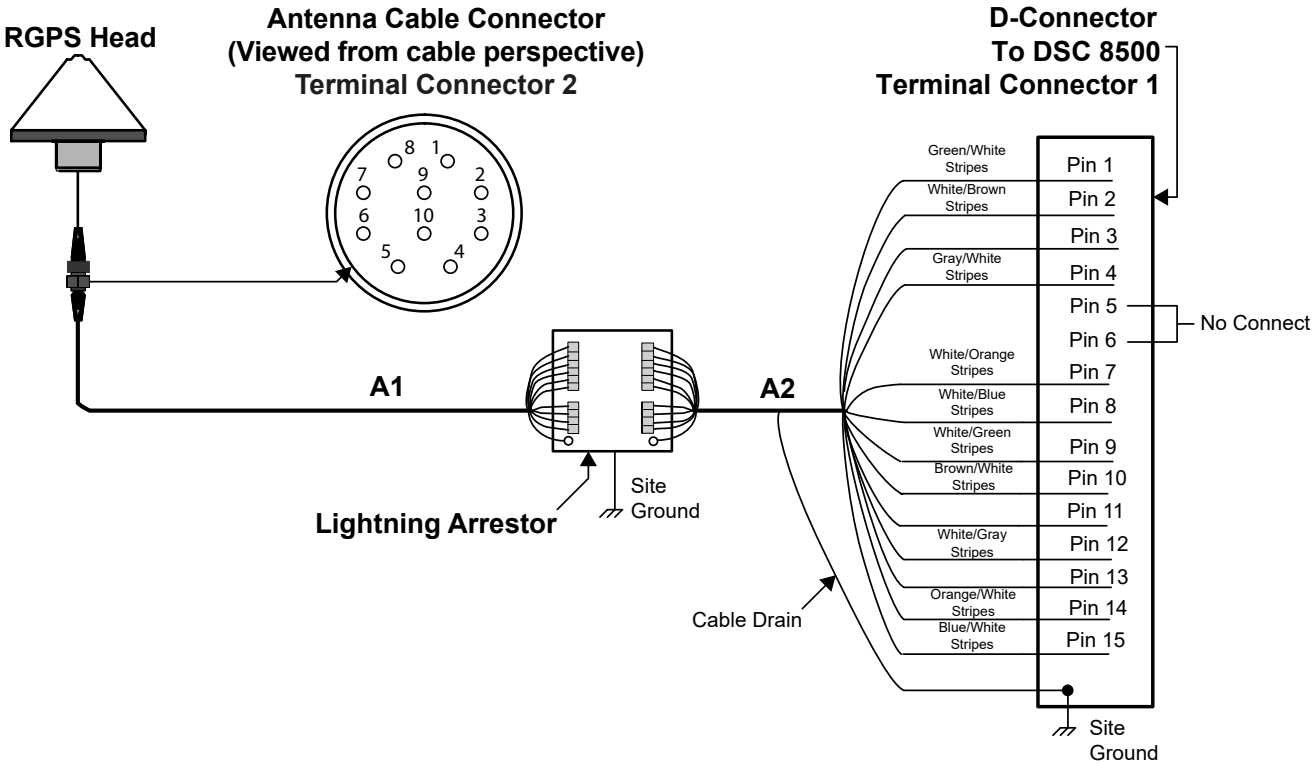

The following figure shows a possible configuration of the connections and terminal assignments for installing the recommended DS-IX-2L1M1DC48–IG model lightning arrestor.

Figure 40: Lightning Arrestor DS-IX-2L1M1DC48–IG Model Wiring

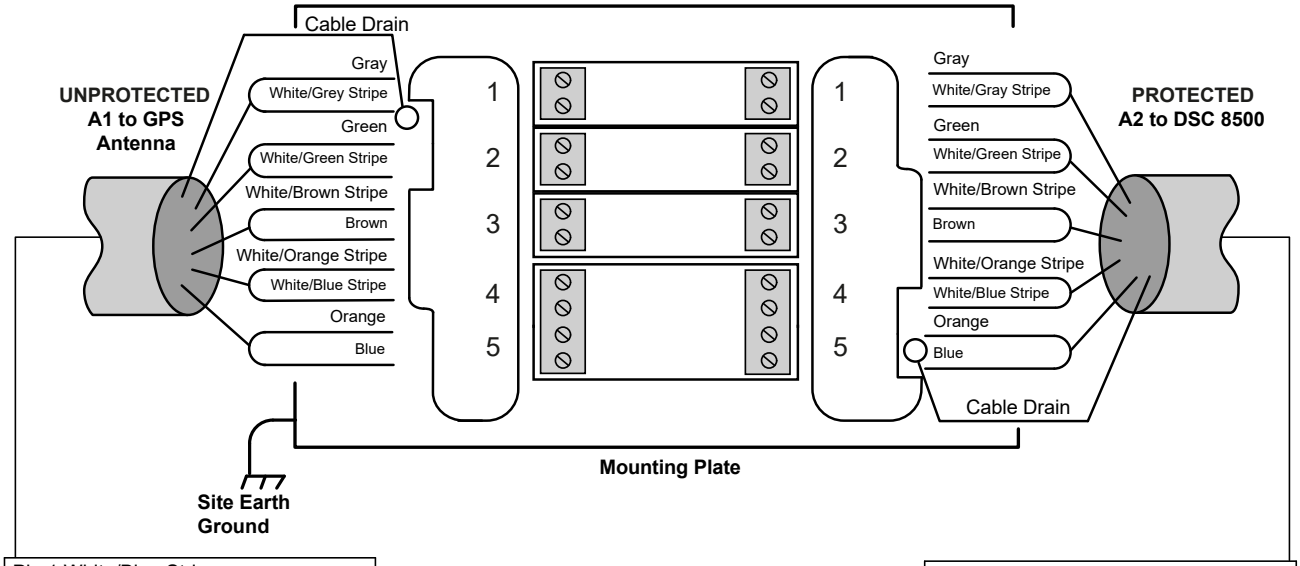

Pin 1 White/Blue Stripe	= Power 1
Pin 2 Blue	= Return 1
Pin 3 Green	= Transmit+
Pin 4 White/Green Stripe	= Transmit+
Pin 5 White/Brown Stripes	= IPPS+
Pin 6 Brown	= IPPS-
Pin 7 White/Orange Stripe	= Power 2
Pin 8 Orange	= Return 2
Pin 9 Gray	= Receive+
Pin 10 White/Gray Stripe	= Receive-

Pin 8 White/Blue Stripe	= Power 1
Pin 15 Blue	= Return 1
Pin 1 Green	= Transmit+
Pin 9 White/Green Stripe	= Transmit-
Pin 2 White/Brown Stripes	= IPPS+
Pin 10 Brown	= IPPS-
Pin 7 White/Orange Stripe	= Power 2
Pin 14 Orange	= Return 2
Pin 4 Gray	= Receive+
Pin 12 White/Gray Stripe	= Receive-