Chapter 10

DBR M12 MultiCarrier Site FRU Procedures

This chapter lists the Field Replaceable Units (FRUs) and includes replacement procedures applicable to the DBR M12 MultiCarrier Site.

10.1 DBR M12 MultiCarrier Site FRUs and Parts

The DBR M12 MultiCarrier Site is comprised of numerous field replaceable units (FRUs) and field replaceable parts.

When replacing a FRU or part, you must obtain the precise FRU Kit Number or Part Number and review the replacement procedures provided, including all safety precautions and system impact information.

When ordering FRUs, you must provide the FRU Kit Number. When ordering field replaceable parts, provide the Part Number. To obtain the numbers that are not provided in this section, you must contact Centralized Managed Support Operations (CMSO). If a part that you want to replace is not listed in this section, you must find the part number on the part or part label and contact Centralized Managed Support Operations (CMSO).

WARNING: To guard against personal injury and/or damage to equipment, switch a trunked base radio to Service Mode when performing service. The system periodically keys up to pseudo train its linear transmitter autonomously when it is not assigned by the zone controller. Tx Inhibiting the base radio also prevents the transmitter from keying. Remember to switch the base radio back to Normal Mode when service is complete.
AVERTISSEMENT: Pour prévenir les blessures ou les dommages à l'équipement, faites passer une radio de base commutée en mode Service lors de l'entretien. Le système se code périodiquement pour pseudo-entraîner son linéaire émetteur de manière autonome lorsqu'il n'est pas attribué par le contrôleur de zone. Le blocage d'émission de la radio de base empêche également l'émetteur de faire le codage. N'oubliez pas de remettre la radio de base en mode normal une fois l'entretien terminé.

Table 41: DBR M12 MultiCarrier Site Field Replaceable Units

Component Type	FRU Kit Number	Replacement Procedure
Transceiver Module (700/800 MHz)	DLN8065A	Replacing the Transceiver Module on page 193
Power Amplifier Module (800 MHz)	DLN8061A	Replacing the Power Amplifier on page 195
Power Amplifier Module (700 MHz)	DLN8062A	Replacing the Power Amplifier on page 195
Site RMC Module (700/800 MHz)	DLN8063A	Replacing the RMC Modules on page 207
Cabinet RMC Module (700/800 MHz)	DLN8064A	Replacing the RMC Modules on page 207
Power Amplifier Fan Filter Replacement Kit	DLN8042A	DBR M12 MultiCarrier Site Troubleshooting and Disaster Recovery on page 209

Component Type	FRU Kit Number	Replacement Procedure
Power Amplifier Fan Kit	DLN8032A	Replacing the Power Amplifier Fan Assembly on page 184
DSC 8500 without Rubidium Timing	DLN1446A	Replacing the DSC 8500 Site Processor on page 191
DSC 8500 with Rubidium Timing	DLN1447A	Replacing the DSC 8500 Site Processor on page 191
2-3 N-Way Combiner (800 MHz)	DLN8066A	Replacing the N-Way Combiner on page 203
2-3 N-Way Combiner (700 MHz)	DLN8067A	Replacing the N-Way Combiner on page 203
4-6 N-Way Combiner (800 MHz)	DLN8068A	Replacing the N-Way Combiner on page 203
4-6 N-Way Combiner (700 MHz)	DLN8069A	Replacing the N-Way Combiner on page 203
2-3 N-Way Splitter (800 MHz)	DLN8070A	Replacing the N-Way Splitter on page 205
2-3 N-Way Splitter (700 MHz)	DLN8071A	Replacing the N-Way Splitter on page 205
4-6 N-Way Splitter (800 MHz)	DLN8072A	Replacing the N-Way Splitter on page 205
4-6 N-Way Splitter (700 MHz)	DLN8073A	Replacing the N-Way Splitter on page 205
Rx Preselector (700/800 MHz)	DLN8074A	Replacing the Site Preselector on page 197
Tx post filter (800 MHz)	DLN8075A	Replacing the Transmit Filter on page 199
Tx post filter (700 MHz)	DLN8076A	Replacing the Transmit Filter on page 199
700Mhz 800MHz TX Phasing Harness	DLN8079A	Replacing the Phasing Harness (for Diplexer Function) on page 201

10.2 Replacing the Power Amplifier Fan Assembly

To prevent overheating, the fan must be in place at all times. You can remove the fan only for servicing purposes.

WARNING: Before and after the removal of the fan module, you must avoid touching the moving fan blades with tools, hands, or other objects. If you want to remove the fan module to access or replace the modules behind it, you must turn off the equipment power and allow the modules to cool before performing any work, as the surfaces of the modules can be hot.
AVERTISSEMENT: Avant et après le retrait du module de ventilateur, vous devez éviter de toucher les pales de ventilateur en mouvement avec des outils, les mains ou d'autres objets. Si vous souhaitez retirer le module de ventilateur pour accéder aux modules derrière lui ou les remplacer, vous devez couper l'alimentation de l'équipement et laisser les modules refroidir avant d'effectuer des travaux, car les surfaces des modules peuvent être chaudes.

IMPORTANT: You can swap out the fan assembly without shutting the power off. You must have the replacement fan assembly in place within a reasonable amount of time, so that the device module does not overheat and shut down.

Figure 88: DSC 8500 Fan Assembly

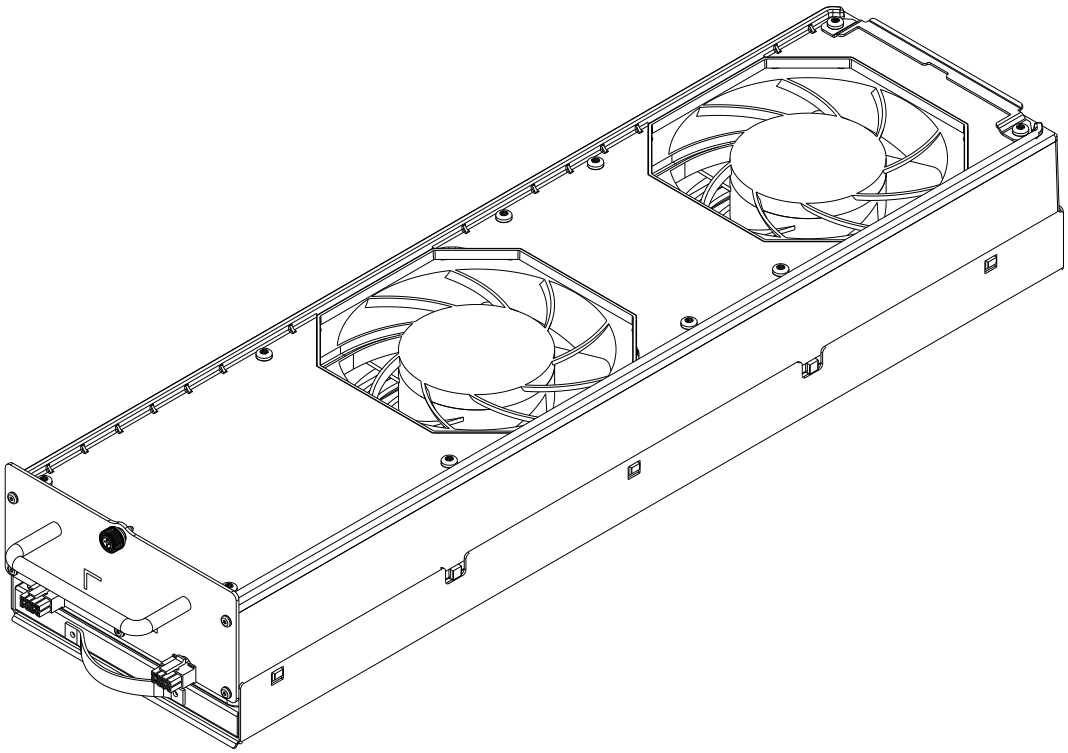

Prerequisites:
Obtain:

- Philips bit screwdriver
- Electrostatic discharge (ESD) wrist strap (Motorola Solutions part number RSX4015A, or equivalent) that must be worn throughout this procedure.

Procedure:

1. Wear an electrostatic discharge (ESD) strap and connect its cable to a verified good ground.

   CAUTION: Wear the ESD strap throughout the whole procedure to prevent ESD damage to any components.
   ATTENTION: Portez la dragonne ESD tout au long de la procédure pour éviter que les composants soient endommagés par les décharges électrostatiques.

2. Disconnect connections from the fan to the power amplifiers (PAs).
3. Using a Phillips bit screwdriver, loosen the captive screw on the front of the fan assembly that you want to replace.
4. Pull the fan module out of the card cage.

   You must support the bottom of the fan kit as it is removed.

5. Insert a new fan kit so that the retainer lines are aligned with the notch in the card cage.

Figure 89: Fan Kit Retainer Lines and Card Cage Notch

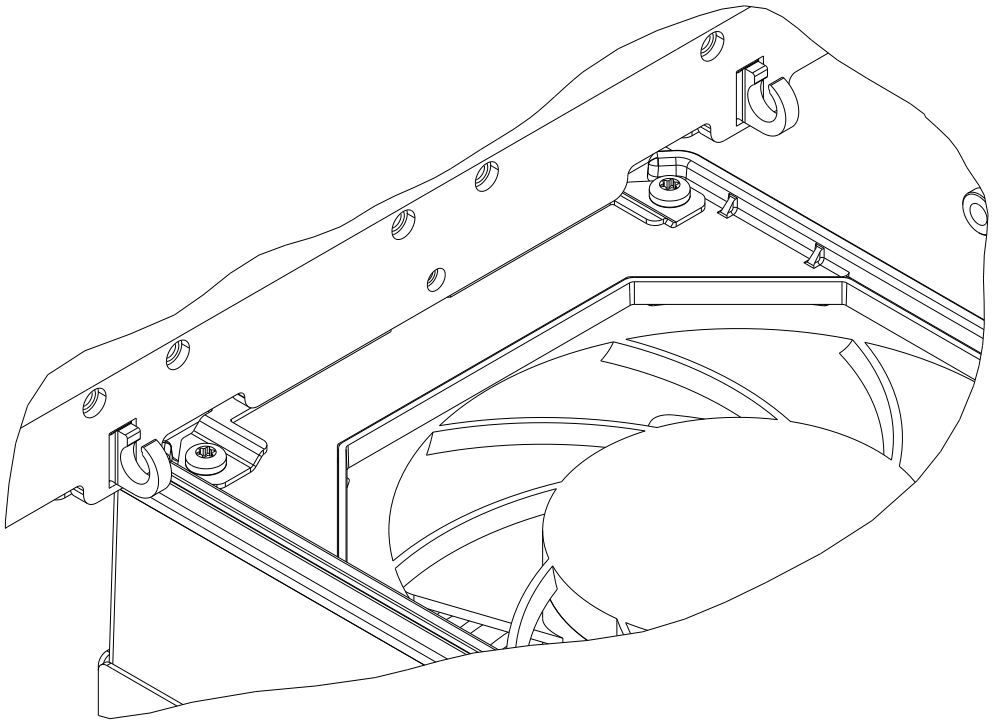

6. Lift the fan kit up and push it forward until the front panel of the fan kit touches the card cage
7. Using a Phillips bit screwdriver, secure the new fan.
8. Ensure that the fan assembly operates properly, and that the fan Alarm LED is off.

   To verify the status of the equipment, you can also use software tools, such as Unified Event Manager (UEM) or Provisioning and Configuration Agent (PCA).

10.3 Replacing the Power Supply Unit Chassis

DANGER: High Leakage Current (12 mA). Earth connection is essential before connecting the power supply.
DANGER: Courant de fuite élevé (12 mA). La connexion à la terre est essentielle avant de connecter l'alimentation.

Prerequisites:
Obtain:

- PH1 screwdriver
- T30 driver set to 55 in-lb
- Electrostatic discharge (ESD) wrist strap (Motorola Solutions part number RSX4015A, or equivalent) that must be worn throughout this procedure. Its cable must be connected to a verified good ground.

Procedure:

1. Unplug the power cord connectors from the Power Supply Units (PSUs).

Figure 90: Power Cord Connectors

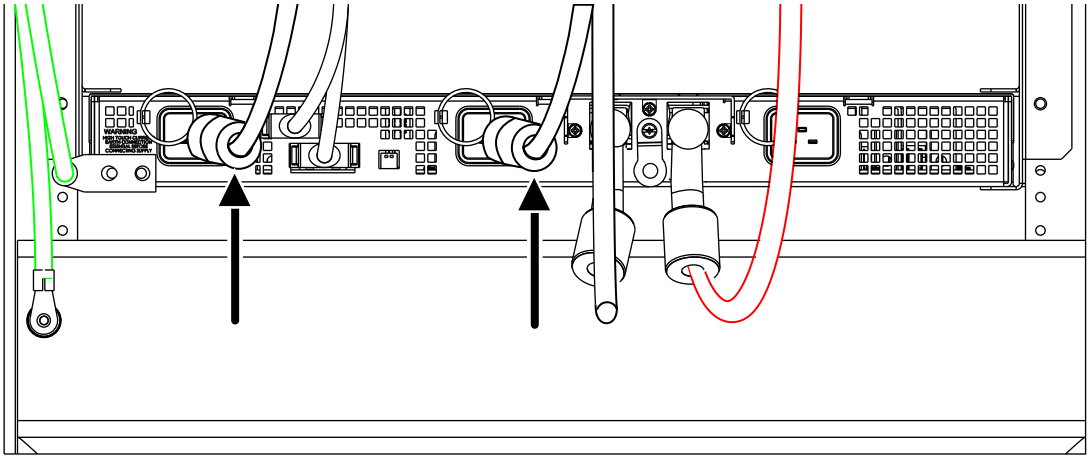

2. Disconnect the DC cables:
   a. Expose DC cable lugs by pushing terminal boots back.
   b. Unscrew the cable lugs of DC cables and remove them from the chassis.

Figure 91: DC Cables

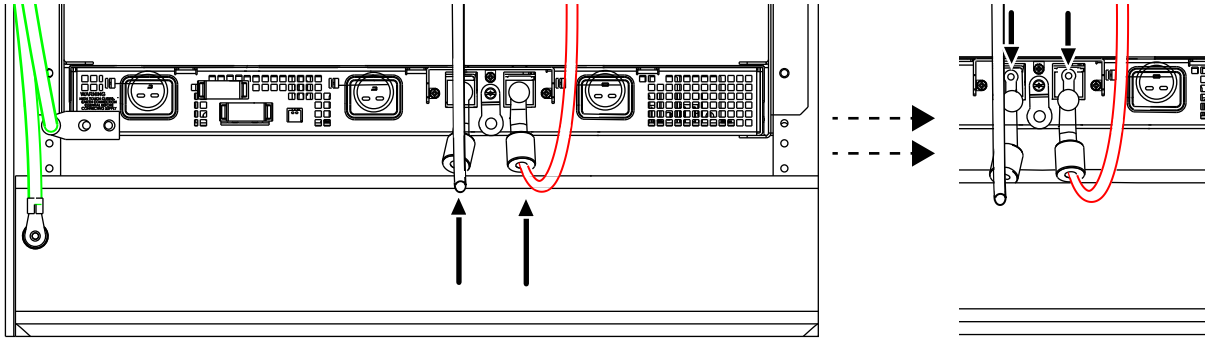

3. Disconnect the alarm cable from the frame.

Figure 92: Alarm Cable

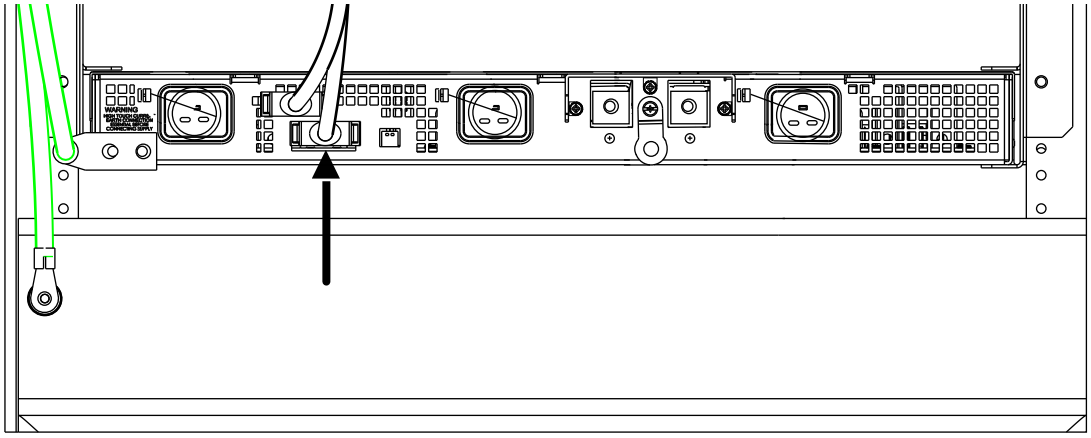

4. Disconnect the grounding cable by unscrewing the nuts on the double lug and pulling out the grounding cable connector.

Figure 93: PSU Chassis Grounding Cable

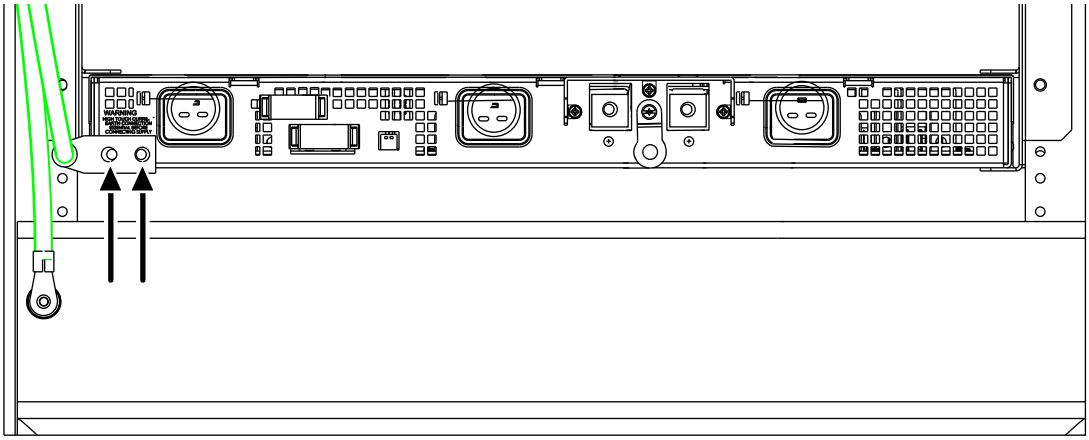

5. Disconnect the PSU chassis from the bracket:
   a. Remove four screws in the chassis corners.
   b. Slide the chassis out of the bracket on the rack.

Figure 94: PSU Chassis Screws Location

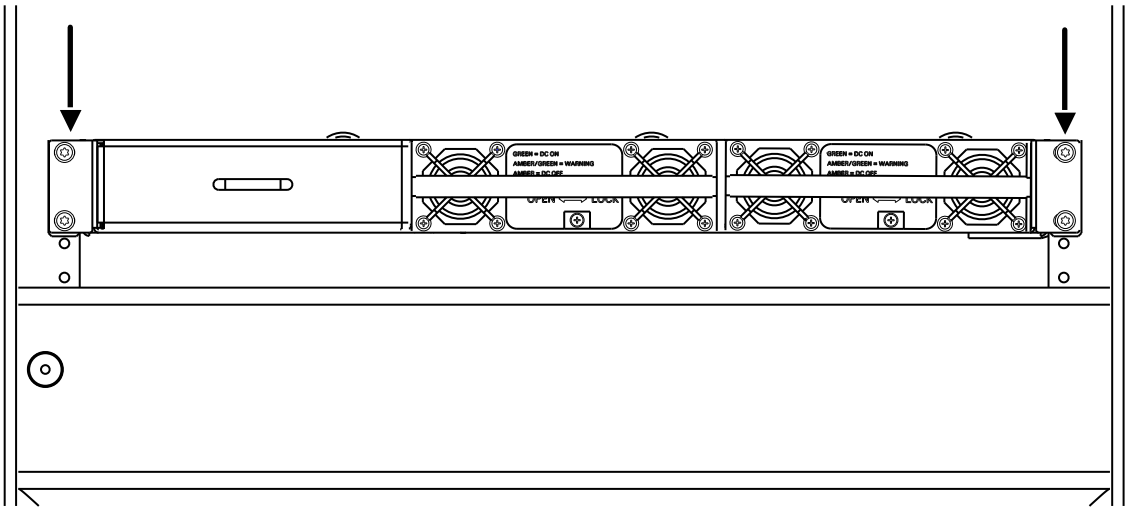

6. Retrieve PSUs:
   a. With a Phillips PH1 screwdriver, loose the screw on the front of the Power Supply Unit (PSU).
   b. Push the prong to the left with one hand.
   c. With the other hand, use the PSU handle to draw it out of the chassis.
   d. Repeat step 6a to step 6c for the other PSU.

Figure 95: Power Supply Units

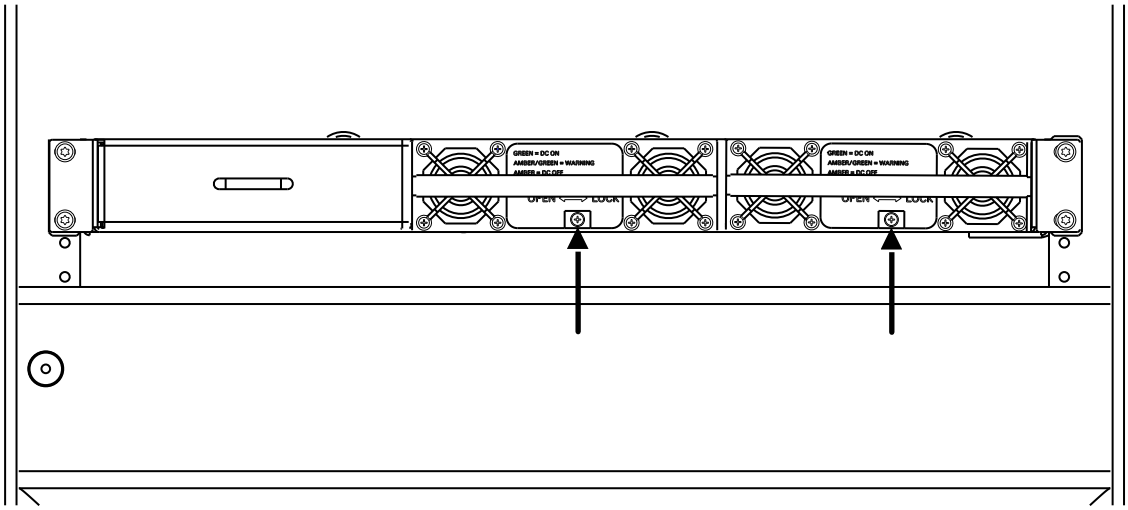

7. Retrieve the PSU blank panel by unscrewing four screws on top and bottom of the chassis and drawing it out of the chassis.

Figure 96: Retrieving the PSU Blank Panel

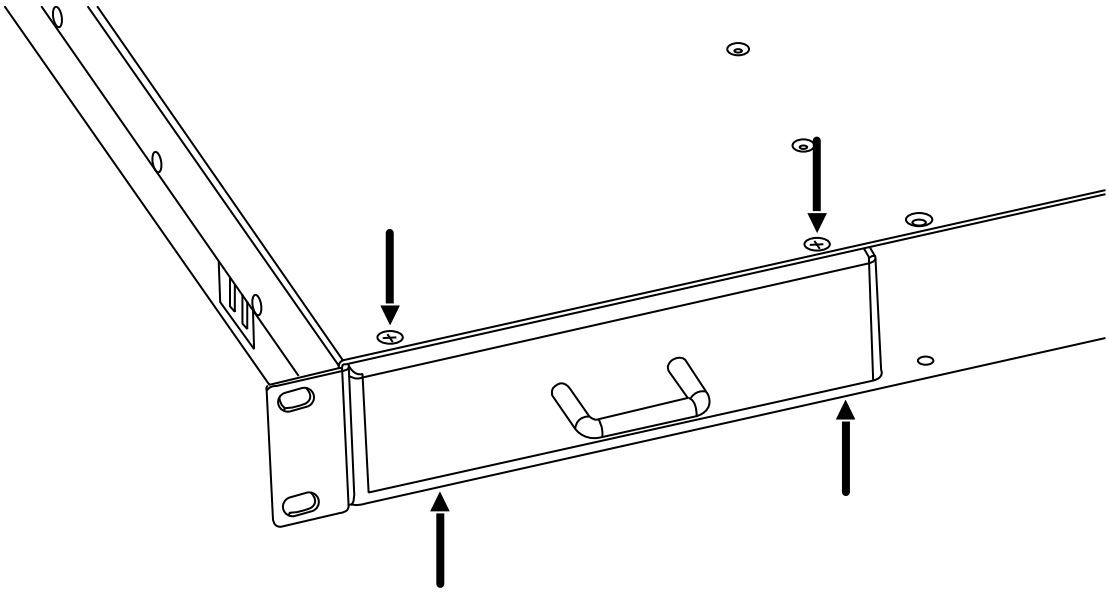

8. With four short M3 screws provided with the panel, install the blank panel on the unused slot of the new PSU chassis.

   The unused slot is the first one from the left. See Figure 95: Power Supply Units on page 189.

9. With four TORX screw, install the new PSU chassis into the bracket on the rack, and drive the screws to 55 in-lbs.

   See Figure 94: PSU Chassis Screws Location on page 188.

10. Install the PSUs in the chassis:

    a. Ensure that the lock screw is open.

    b. Slide each PSU into the chassis and ensure that each module clicks into place.

c. With a Philips screwdriver tighten the lock screws.

See Figure 95: Power Supply Units on page 189.

11. Connect DC cables to the new chassis:

a. With the screws provided with the PSU chassis, screw the cable end with a log ring terminal to the PSU chassis.

b. Draw the terminal boots up to cover the long ring terminals.

See Figure 91: DC Cables on page 187.

12. Connect the grounding cable to the new PSU chassis by screwing the end with a double lug to the location in the bottom left corner of the chassis.

See Figure 93: PSU Chassis Grounding Cable on page 188.

WARNING: Do not disconnect the AC PSU alarm cable during operation. This cable must be connected to the PSU tray for the DC power to be provided to the DSC 8500. Removal of this cable from the AC Power Supply tray results in loss of power to the DSC 8500.
AVERTISSEMENT: Ne débranchez pas le câble d'alarme du bloc d'alimentation CA pendant le fonctionnement. Ce câble doit être connecté au plateau d'alimentation CA pour que l'alimentation CC soit fournie au DSC 8500. Le retrait de ce câble du plateau d'alimentation CA entraîne une perte d'alimentation du DSC 8500.

13. Connect the PSU alarm cable to the back side of the PSU chassis.

See Figure 92: Alarm Cable on page 187.

14. Plug in the power cords to the PSU chassis.

See Figure 90: Power Cord Connectors on page 187.

10.4 Replacing the Power Supply Unit

Prerequisites:
Obtain:

- PH1 screwdriver
- Electrostatic discharge (ESD) wrist strap (Motorola Solutions part number RSX4015A, or equivalent) that must be worn throughout this procedure. Its cable must be connected to a verified good ground

Procedure:

1. Remove the faulty power supply unit from the rack:

a. With a Phillips PH1 screwdriver, loose the screw on the front of the Power Supply Unit (PSU).

b. Push the prong to the left with one hand.

c. With the other hand, use the PSU handle to draw it out of the chassis.

See Replacing the Power Supply Unit Chassis on page 186.

2. Install the new PSU in the rack:

a. Ensure that the lock screw is open.

b. Slide the PSU into the chassis and ensure that it clicks into place.

c. With a Philips screwdriver tighten the lock screws.

3. To monitor the power supply status, connect the power supply presence output to the Aux In on the DSC 8500 or to other monitoring device (for example MC Edge). See Configuring the Auxiliary Inputs on page 146.

10.5

Replacing the DSC 8500 Site Processor

IMPORTANT: You can hot swap the DSC 8500 site controller module without losing functionality. The standby site controller automatically becomes the active site controller and takes over for the replaced site controller.
Do not perform this procedure if a DSC 8500 failed during the **Software Upgrade** action. The software upgrade must be recovered before starting this procedure. See Recovering the DSC 8500 Failed Software Upgrade on page 179.

Prerequisites:
Ensure that you pulled the configuration and hardware information from the DSC 8500 to the Unified Network Configurator (UNC). See "Scheduling the Pull of Device Configurations" in the Unified Network Configurator User Guide.

NOTE: It may be impossible to pull the configuration and hardware information from the DSC 8500 to the UNC if the communication between the site controller and the UNC is severed.

Obtain:

- Replacement DSC 8500 with known a MAC address
- T30 Torx screwdriver with torque setting 6.2 Nm (55 in/lb)
- 3/8" socket and torque wrench set to 55 in-lbs
- Electrostatic discharge (ESD) wrist strap (Motorola Solutions part number RSX4015A, or equivalent) that must be worn during the removal and installation of the DSC 8500 in the rack.

Procedure:

1. Wear an electrostatic discharge (ESD) strap and connect its cable to a verified good ground.

   CAUTION: Wear the ESD strap throughout the whole procedure to prevent ESD damage to any components.
   ATTENTION: Portez la dragonne ESD tout au long de la procédure pour éviter que les composants soient endommagés par les décharges électrostatiques.

2. Perform one of the following actions:
   - If the DSC 8500 is non-operational, go to step 4.
   - If the DSC 8500 is operational, go to step 3.
3. Wipe the software and sensitive data from the failed DSC 8500. See Wiping the Software and Sensitive Data on page 156.

   NOTE: In case of serious hardware failure it might be impossible to wipe the software and sensitive data from the failed DSC 8500.

4. Label and disconnect all cables from the front of the failed DSC 8500.

   If only one site router is present and connected to port DSCn_Port2_Router port on the failed DSC 8500, communication with the site is lost after the cable is unplugged.

5. Perform one of the following actions:
   - If you remove the DSC 8500 from an open rack, remove the four screws that hold the DSC 8500 in brackets to the rails by using a 3/8" socket.
   - If you remove the DSC 8500 from a cabinet, remove the four screws that hold the DSC 8500 in brackets to the rails by using a T30 Torx screwdriver.
6. Partially remove the DSC 8500 and at the rear, remove the screw fastening the grounding cable to the module by using a T30 Torx screwdriver.
7. Fully remove the DSC 8500 module.

8. Partially insert the replacement DSC 8500 into position and at the rear, fasten the grounding cable to the DSC 85000 to 17 in-lbs by using a T30 Torx screwdriver.
9. Perform one of the following actions:
   - If you insert the replacement DSC 8500 to an open rack, fasten the four screws that hold the DSC 8500 in brackets to the rails to 55 in-lbs by using a 3/8" socket.
   - If you insert the replacement DSC 8500 to a cabinet, fasten the four screws that hold the DSC 8500 in brackets to the rails to 55 in-lbs by using a T30 Torx screwdriver.
10. Reconnect all the cabling to the correct replacement DSC 8500 ports, as labeled in step 4.

10.5.1
Deploying the DSC 8500 Software After the DSC 8500 Replacement

IMPORTANT: Do not perform this procedure if a DSC 8500 failed during the **Software Upgrade** action. The software upgrade must be recovered before starting this procedure. See Recovering the DSC 8500 Failed Software Upgrade on page 179.

To avoid connectivity issues related to cabling the replacement DSC 8500 differently than the original, use the remaining DSC 8500 to disable MAC Port Lockdown on all ports of all DSC 8500s prior to connecting the replacement DSC 8500. After connecting the replacement DSC 8500, configure MAC Port lockdown for the desired ports. See Enabling/Disabling MAC Port Lockdown on the DSC 8500 on page 140.

Prerequisites:
Obtain:

- Service laptop with On-Premises Software Hub installed. Ensure that service laptop is connected to any enabled DSC 8500 service port. If not, enable service port on one of the working DSC 8500s. See Configuring the DSC 8500 Switch on page 138.
- DSC 8500 installation media
- IDs of the failed DSC 8500s
- MAC addresses of all replaced DSC 8500s

Ensure that:

- The latest version of On-Premises Software Hub is used.
- The software bundle deployed on the other DSC 8500s in the site is imported to On-Premises Software Hub.
- The replacement DSC 8500 was wiped. See Wiping the Software and Sensitive Data on page 156.

Procedure:

1. From the desktop, launch the **On-Premises Software Hub** application.
2. Import the DSC 8500 software bundle. See Importing the DSC 8500 Software Bundle on page 100.

   After the software bundle is imported, a success message appears in the right bottom corner.
3. Discover the site. See Discovering the Site on page 100.
4. Connect to the site. See Connecting to the Site on page 101.
5. Go to **Device Management** screen in the On-Premises Software Hub.
6. For the site where the DSC 8500 is replaced or wiped, from the **Action** drop-down list, select **FRU Replacement-DSC** *<DSC_ID>*.

7. In the **FRU Replacement** window, verify that software bundle version and site parameters are set correctly.
8. Set the DSC 8500 instance ID for the found MAC address of the new DSC 8500.

   IMPORTANT: It is required that the new DSC 8500 has the same ID as the replaced, failed DSC 8500.
9. Click **Continue** to start the installation process.

   Until the installation process for one site is complete, it is not possible to start the installation process for another site.
10. Wait for successful completion of **Initial Deployment** action on the replaced DSC 8500.
11. Verify security configuration. See Verifying the DBR M12 MultiCarrier Site Security Configuration on page 143.

10.5.2
Configuring DSC 8500 After Disaster Recovery Software Installation

IMPORTANT: Do not perform this procedure if a DSC 8500 failed during the **Software Upgrade** action. The software upgrade must be recovered before starting this procedure. See Recovering the DSC 8500 Failed Software Upgrade on page 179.

This procedure configures DSC 8500 after successful hardware replacement and software deployment.

If disaster recovery is required for more than one DSC 8500s in the site, this procedure should be done when all DSC 8500s are replaced and the software on them is deployed.

Prerequisites:
Obtain:

- Service laptop or the Network Management (NM) Client
- IP address or the host name of the DSC 8500. See Logon Information on page 106.
- Credentials for the System Infrastructure Administrator account

Process:

1. Verify the DSC 8500 Trunking RF Site Security Configuration for each replaced DSC 8500. See Verifying the DBR M12 MultiCarrier Site Security Configuration on page 143.
2. In Provisioning and Configuration Agent, discover the DSC 8500s. See Discovering the Hardware on page 140.

10.6
Replacing the Transceiver Module

IMPORTANT: Do not perform this procedure if a DSC 8500 failed during the **Software Upgrade** action. The software upgrade must be recovered before starting this procedure. See Recovering the DSC 8500 Failed Software Upgrade on page 179.

Figure 97: Transceiver Module

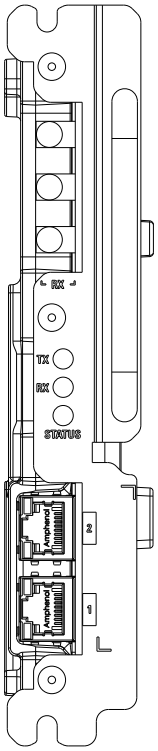

Figure 98: Transceiver Card Cage

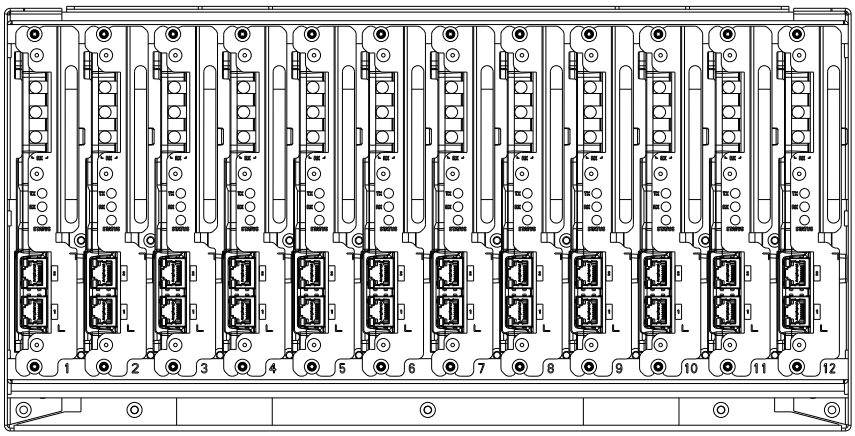

Prerequisites:
Obtain:

- The replacement transceiver module
- T20 bit
- Electrostatic discharge (ESD) wrist strap (Motorola Solutions part number RSX4015A, or equivalent) that must be worn during the removal and installation of the DSC 8500 in the rack.

Procedure:

1. Wear an electrostatic discharge (ESD) strap and connect its cable to a verified good ground.

   CAUTION: Wear the ESD strap throughout the whole procedure to prevent ESD damage to any components.
   ATTENTION: Portez la dragonne ESD tout au long de la procédure pour éviter que les composants soient endommagés par les décharges électrostatiques.

2. Locate the transceiver module that you want to replace.
3. In Provisioning and Configuration Agent (PCA), disable the XCVR by performing the following actions:
   a. Navigate to **Services** → **Requested States**.
   b. In the **Requested States** view, expand the **Transceiver** node.
   c. Expand the node for the rack where the XCVR is installed.
   d. From the drop-down list next to the XCVR, select **Disable**.
4. To disengage the two captive screws on the front of the transceiver module, loosen them by using a T20 bit.
5. Grab the transceiver handle and gently pull the transceiver out of the card cage by 0.5 inch – 1.0 inch (127 mm – 254 mm).

   IMPORTANT: You must follow all the steps from step 5 through step 10 to avoid a temporary loss of all channels in the associated bank.

6. Label and disconnect all cables from the ports on the transceiver.
7. Grab the handle on the transceiver module and gently pull the transceiver module straight out the rest of the way, along the guides on which it sits.
8. Slide in the replacement transceiver module along the guiding rails until it is 0.5 inch – 1.0 inch from fully engaging into the backplane.
9. Reconnect all cables to the appropriate ports on the transceiver.
10. Push the transceiver the rest of the way along the guiding rails until it is fully engaged.

    A slight push may be necessary to securely engage the module in place.

    IMPORTANT: If the transceiver module stops before it is engaged, it is in an incorrect position. It is either in the wrong slot or is rotated 180°. The module has a keying feature that prevents it from going all the way into an incorrect slot, or going into the correct slot but rotated 180°. Do not try to force the module.

11. To secure the transceiver module to the card cage, insert the two captive screws on the front of the transceiver and tighten them to 17 in-lbs by using a T20 bit.
12. In PCA, discover the new XCVR. See Discovering the Hardware on page 140.
13. In PCA, check the records of the XCVR by performing the following actions:
    a. Navigate to **Services** → **Event Monitoring**.
    b. In the **Event Monitoring** view, expand the **Transceiver** node.

10.7 Replacing the Power Amplifier

IMPORTANT: Do not perform this procedure if a DSC 8500 failed during the **Software Upgrade** action. The software upgrade must be recovered before starting this procedure. See Recovering the DSC 8500 Failed Software Upgrade on page 179.

Figure 99: Power Amplifier I/O Connections

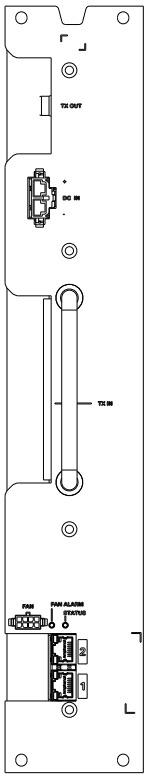

Prerequisites:
Obtain:

- Replacement power amplifier (PA) module
- T20 bit screwdriver
- Electrostatic discharge (ESD) wrist strap (Motorola Solutions part number RSX4015A, or equivalent) that must be worn throughout this procedure.

Procedure:

1. Wear an electrostatic discharge (ESD) strap and connect its cable to a verified good ground.

   ⚠ **CAUTION:** Wear the ESD strap throughout the whole procedure to prevent ESD damage to any components.
   ATTENTION: Portez la dragonne ESD tout au long de la procédure pour éviter que les composants soient endommagés par les décharges électrostatiques.

2. Perform one of the following actions:
   - If the PA is non-operational, go to step 4.
   - If the PA is operational, go to step 3.
3. In Provisioning and Configuration Agent (PCA), disable the PA by performing the following actions:
   a. Navigate to **Services** → **Requested States**.
   b. In the **Requested States** view, expand the **Power Amplifier** node.
   c. Expand the node for the rack where the PA is installed.
   d. From the drop-down list next to the PA, select **Disable**.
4. Remove the 4 screws that secure the PA module in place by using a T20 bit screwdriver.

5. To allow for better reach to the RF connectors, partially remove the PA.

   IMPORTANT: You must follow all the steps from step 5 through step 16 to avoid a temporary loss of all channels in the associated bank.

6. Disconnect the Tx In and Tx Out coaxial cables.

   NOTE: Do not disconnect any of the cables from the N-Way splitter or combiners.

   WARNING: Wait for the PA module to cool down before attempting to remove it.
   AVERTISSEMENT: Attendez que le module de l'amplificateur de puissance (AP) refroidisse avant de tenter de le retirer.

7. Disconnect Ethernet cables.
8. Disconnect the DC power and the fan cables.
9. Fully remove the PA module from the card cage.
10. Partially insert the replacement PA module so that the retainer lines are aligned with the guides in the card cage, leaving room to access the RF connectors.

    Do not connect the PA module yet.

11. Reconnect the DC power cable.
12. Reconnect the two cables from the N-Way combiner and the N-Way splitter to the Tx In and Tx Out on the PA.
13. Push the PA the rest of the way into the card cage.
14. Secure the PA to the card cage by tightening the four provided M4 to 17 in-lbs with a T20 bit.
15. Reconnect the Ethernet cables.
16. Reconnect the fan cables to the PA.
17. In PCA, discover the new PA module. See Discovering the Hardware on page 140.
18. In PCA, check the records of the XCVR by performing the following actions:
    a. Navigate to **Services** → **Event Monitoring**.
    b. In the **Event Monitoring** view, expand the **Power Amplifier** node.

10.8 Replacing the Site Preselector

You can replace the site preselector without shutting the power down.

Figure 100: Site Preselector Filter (700/800)

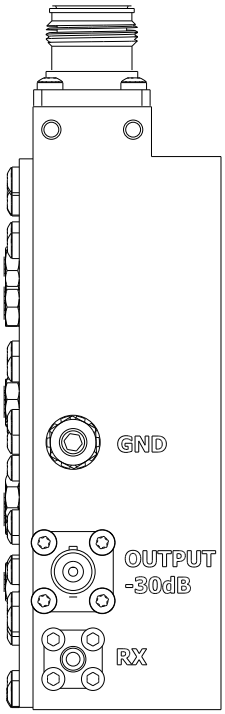

Prerequisites:
Obtain:

- Replacement site preselector
- T20 bit screwdriver
- 3/8" nut driver
- Electrostatic discharge (ESD) wrist strap (Motorola Solutions part number RSX4015A, or equivalent) that must be worn during the removal and installation of the site preselector.

Procedure:

1. Wear an electrostatic discharge (ESD) strap and connect its cable to a verified good ground.

   CAUTION: Wear the ESD strap throughout the whole procedure to prevent ESD damage to any components.
   ATTENTION: Portez la dragonne ESD tout au long de la procédure pour éviter que les composants soient endommagés par les décharges électrostatiques.

2. Remove the site preselector from the rack by performing the following actions:
   a. Remove all cables from the site preselector.
   b. Remove the grounding cable from the site preselector by using the 3/8" nut driver.
   c. Remove the two screws that secure the site preselector tray to the Radio System Distribution System (RFDS) card cage by using the T20 bit screwdriver.
   d. Remove the four screws on the bottom of the site preselector tray by using the T20 bit screwdriver.
3. Install the replacement site preselector by performing the following actions:
   a. Secure the replacement site preselector to the tray by using the 4 screws tightened with the T20 bit screwdriver.

b. Insert the replacement site preselector tray so that the retainer lines are aligned with the notch in the card cage and tighten the two screws by using the T20 bit screwdriver.

c. Reconnect the grounding cable to the site preselector by using the 3/8" nut driver.

d. Reconnect all cables to the site preselector.

4. Ensure that the system is operating properly by checking the receiver sensitivity.

10.9 Replacing the Transmit Filter

WARNING: Shock hazard. The DBR M12 MultiCarrier Site contains dangerous voltages which can cause severe electrical shock or damage to equipment. You must disable power to the system before servicing the transmit filter.
AVERTISSEMENT: Risque d'électrocution. Le site DBR M12 MultiCarrier contient des tensions dangereuses qui peuvent provoquer une décharge électrique grave ou des dommages à l'équipement. Vous devez couper l'alimentation du système avant l'entretien de cette pièce.

IMPORTANT: Before you replace or remove the transmit filter, you must turn off the power to the site if the entire site is connected to the transmit filter that you want to replace or remove. Turning off the power to the site, causes any affiliated subscribers to relocate to another channel at an adjacent site. You must disable the site before powering down so the system does not attribute the loss of channel to a failure.
Do not perform this procedure if a DSC 8500 failed during the **Software Upgrade** action. The software upgrade must be recovered before starting this procedure. See Recovering the DSC 8500 Failed Software Upgrade on page 179.

Figure 101: Site Transmit Filter

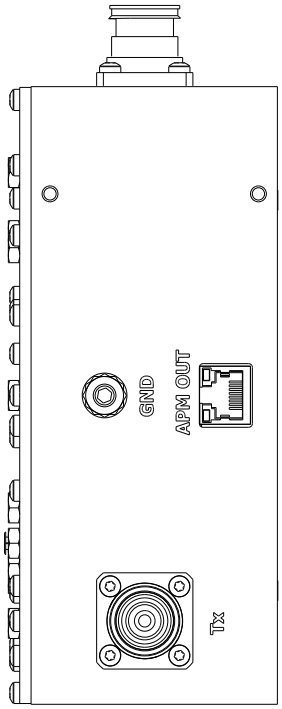

Prerequisites:
Obtain:

- Replacement site transmit filter

- T20 bit screwdriver
- 3/8" nut driver
- Electrostatic discharge (ESD) wrist strap (Motorola Solutions part number RSX4015A, or equivalent) that must be worn during the removal and installation of the transmit filter.

Procedure:

1. Wear an electrostatic discharge (ESD) strap and connect its cable to a verified good ground.

   CAUTION: Wear the ESD strap throughout the whole procedure to prevent ESD damage to any components.
   AVERTISSEMENT: Risque d'électrocution. Le site DBR M12 MultiCarrier contient des tensions dangereuses qui peuvent provoquer une décharge électrique grave ou des dommages à l'équipement. Vous devez couper l'alimentation du système avant l'entretien de cette pièce.

2. In Provisioning and Configuration Agent (PCA), disable all of the power amplifiers (PAs) associated with the PMU/Tx post filter by performing the following actions:
   a. Navigate to **Services** → **Requested States**.
   b. In the **Requested States** view, expand the **Power Amplifier** node.
   c. Expand the node for the rack where the PA is installed.
   d. From the drop-down list next to the PA, select **Disable**.
   e. Repeat step 2d to be diabled.
3. Remove the site transmit filter from the rack, by performing the following actions:
   a. Remove all cables from the site transmit filter.
   b. Remove the grounding cable from the site transmit filter by using the 3/8" nut driver.
   c. Remove the two screws that secure the site transmit filter tray to the Radio System Distribution System (RFDS) card cage by using the T20 bit screwdriver.
   d. Remove the four screws on the bottom of the site transmit filter tray by using the T20 bit screwdriver.
4. Install the replacement site transmit filter by performing the following actions:
   a. Secure the replacement site transmit filter to the tray by using the four screws tightened with the T20 bit screwdriver.
   b. Insert the replacement site transmit filter tray so that the retainer lines are aligned with the notch in the card cage and tighten the two screws by using the T20 bit screwdriver.
   c. Reconnect the grounding cable to the site transmit filter by using the 3/8" nut driver.
   d. Reconnect all cables to the site transmit filter.
5. In PCA, discover the new PMU/Tx post filter. See Discovering the Hardware on page 140.
6. In PCA, check the Tx Bank records by performing the following actions:
   a. Navigate to **Services** → **Event Monitoring**.
   b. In the **Event Monitoring** view, expand the **Transmit Bank** node.
7. In Provisioning and Configuration Agent (PCA), enable all of the power amplifiers (PAs) associated with the PMU/Tx post filter by performing the following actions:
   a. Navigate to **Services** → **Requested States**.
   b. In the **Requested States** view, expand the **Power Amplifier** node.
   c. Expand the node for the rack where the PA is installed.
   d. From the drop-down list next to the PA, select **Enable**.

e. Repeat step 7d to be enabled.

8. In PCA, validate the associated Tx Bank, Tx power capability by performing the following actions:
   a. Navigate to **Services** → **RFDS Configuration**.
   b. In the **Transmit Path** view, click **Test**.

10.10

Replacing the Phasing Harness (for Diplexer Function)

WARNING: Shock hazard. The DBR M12 MultiCarrier Site contains dangerous voltages which can cause severe electrical shock or damage to equipment. You must disable power to the system before servicing this part.
AVERTISSEMENT: Risque d'électrocution. Le site DBR M12 MultiCarrier contient des tensions dangereuses qui peuvent provoquer une décharge électrique grave ou des dommages à l'équipement. Vous devez couper l'alimentation du système avant l'entretien de cette pièce.

IMPORTANT: Before you replace or remove the phasing harness, you must turn off the power to the site if the entire site is connected to the phasing harness that you want to replace or remove. Turning off the power to the site, causes any affiliated subscribers to relocate to another channel at an adjacent site. You must disable the site before powering down so the system does not attribute the loss of channel to a failure.
Do not perform this procedure if a DSC 8500 failed during the **Software Upgrade** action. The software upgrade must be recovered before starting this procedure. See Recovering the DSC 8500 Failed Software Upgrade on page 179.

Figure 102: Phasing Harness

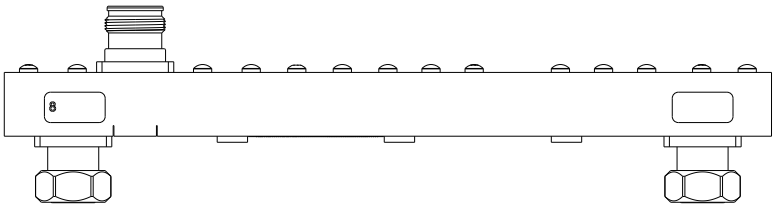

Prerequisites:
Obtain:

- Replacement phasing harness
- Electrostatic discharge (ESD) wrist strap (Motorola Solutions part number RSX4015A, or equivalent) that must be worn during the removal and installation of the phasing harness.

Procedure:

1. Wear an electrostatic discharge (ESD) strap and connect its cable to a verified good ground.

   CAUTION: Wear the ESD strap throughout the whole procedure to prevent ESD damage to any components.
   ATTENTION: Portez la dragonne ESD tout au long de la procédure pour éviter que les composants soient endommagés par les décharges électrostatiques.

2. In the Provisioning and Configuration Agent (PCA), disable all of the power amplifiers (PAs) by performing the following actions:

   a. Navigate to **Services** → **Requested States**.
   b. In the **Requested States** view, expand the **Power Amplifier** node.
   c. Expand the node for the rack where the PA is installed.
   d. From the drop-down list next to the PA, select **Disable**.
   e. Repeat step 5d to be disabled.
3. Remove the phasing harness from the rack, by performing the following actions:
   a. Remove antenna cable.
   b. On the phasing harness, disconnect the connectors that connect to each post filter.
4. Install the replacement phasing harness by performing the following actions:
   a. On the phasing harness, connect the connectors that connect to each post filter

      NOTE: You must install the replacement phasing harness in a way that the connectors labeled with a particular frequency band are connected to the appropriate post filters.
   b. Connect the antenna cable to the phasing harness.
5. In the Provisioning and Configuration Agent (PCA), enable all of the power amplifiers (PAs) by performing the following actions:
   a. Navigate to **Services** → **Requested States**.
   b. In the **Requested States** view, expand the **Power Amplifier** node.
   c. Expand the node for the rack where the PA is installed.
   d. From the drop-down list next to the PA, select **Enable**.
   e. Repeat step 5d for all PAs to be enabled.
6. In PCA, validate the associated Tx Bank, Tx power capability by performing the following actions:
   a. Navigate to **Services** → **RFDS Configuration**.
   b. In the **Transmit Path** view, click **Test**.

10.11

Replacing the N-Way Combiner

You can perform this procedure to replace the 2-3 N-Way combiner and the 4-6 N-Way combiner. The number of cables that you must disconnect and reconnect, varies between the 2-3 N-Way combiner and the 4-6 N-Way combiner.

WARNING: Shock hazard. The DBR M12 MultiCarrier Site contains dangerous voltages which can cause severe electrical shock or damage to equipment. You must disable power to the system before servicing this part.
AVERTISSEMENT: Risque d'électrocution. Le site DBR M12 MultiCarrier contient des tensions dangereuses qui peuvent provoquer une décharge électrique grave ou des dommages à l'équipement. Vous devez couper l'alimentation du système avant l'entretien de cette pièce.

IMPORTANT: Before you replace or remove the N-Way combiner, you must turn off the power to the site if the entire site is connected to the N-Way combiner that you want to replace or remove. Turning off the power to the site, causes any affiliated subscribers to relocate to another channel at an adjacent site. You must disable the site before powering down so the system does not attribute the loss of channel to a failure.
If the DBR M12 MultiCarrier Site has more than one N-Way combiner, you do not need to power off the remaining N-Way Combiner and its associated power amplifiers (PAs). If the DBR M12 MultiCarrier Site has only one N-Way combiner, replacing it shuts down the entire rack.

Do not perform this procedure if a DSC 8500 failed during the **Software Upgrade** action. The software upgrade must be recovered before starting this procedure. See Recovering the DSC 8500 Failed Software Upgrade on page 179.

Figure 103: 2-3 N-Way Combiner

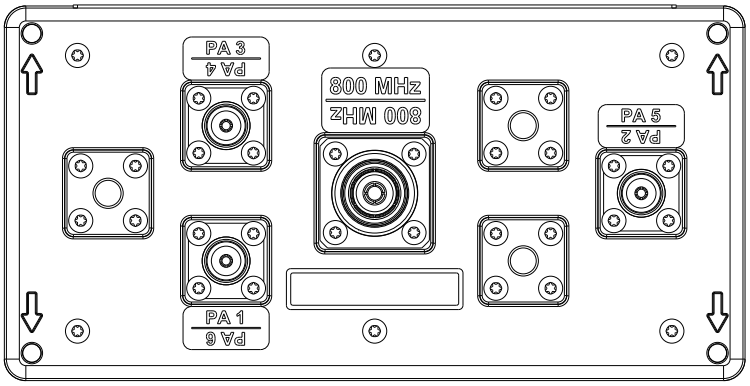

Figure 104: 4-6 N-Way Combiner

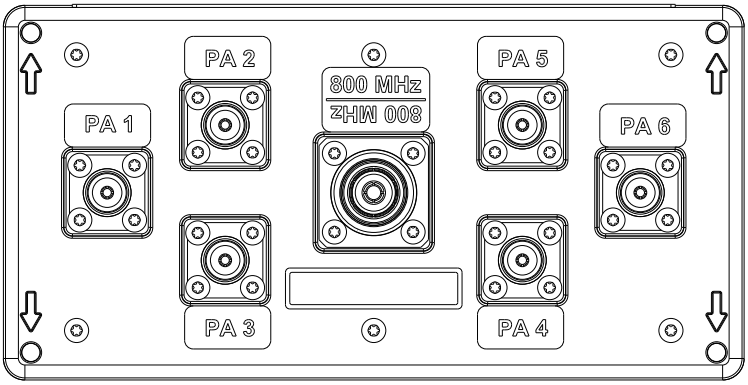

Prerequisites:
Obtain:

- Replacement N-Way combiner
- T20 bit screwdriver
- Electrostatic discharge (ESD) wrist strap (Motorola Solutions part number RSX4015A, or equivalent) that must be worn during the removal and installation of the N-Way combiner.

Procedure:

1. Wear an electrostatic discharge (ESD) strap and connect its cable to a verified good ground.

   CAUTION: Wear the ESD strap throughout the whole procedure to prevent ESD damage to any components.
   ATTENTION: Portez la dragonne ESD tout au long de la procédure pour éviter que les composants soient endommagés par les décharges électrostatiques.

2. In the Provisioning and Configuration Agent (PCA), disable all of the power amplifiers (PAs) associated with the N-Way combiner that you want to replace by performing the following actions:
   a. Navigate to **Services** → **Requested States**.
   b. In the **Requested States** view, expand the **Power Amplifier** node.
   c. Expand the node for the rack where the PA is installed.
   d. From the drop-down list next to the PA, select **Disable**.
   e. Repeat step 2d for all PAs to be disabled.
3. Remove the N-Way combiner from the rack by performing the following actions:
   a. Label and disconnect all cables from the N-Way Combiner.

      You do not have to disconnect the other end of the cables from the power amplifier or the post filter.
   b. In the corner of the N-Way combiner, remove the four screws by using a T20 bit srewdriver.
4. Install the replacement N-Way combiner by performing the following actions:
   a. Secure the replacement N-Way combiner to the mounting bracket bu using the four screws tightened with a T20 bit screwdriver.
   b. Reconnect all cables to the N-Way combiner.
5. In PCA, enable all of the PAs associated with the PMU/Tx post filter Bank by performing the following actions:

a. Navigate to **Services** → **Requested States**.
b. In the **Requested States** view, expand the **Power Amplifier** node.
c. Expand the node for the rack where the PA is installed.
d. From the drop-down list next to the PA, select **Enable**.
e. Repeat step 5d for all PAs to be enabled.

6. In PCA, validate the associated Tx Bank, Tx power capability by performing the following actions:
   a. Navigate to **Services** → **RFDS Configuration**.
   b. In the **Transmit Path** view, click **Test**.

10.12 Replacing the N-Way Splitter

You can replace the N-Way splitter without shutting the power off.

Figure 105: 2-3 N-Way Splitter

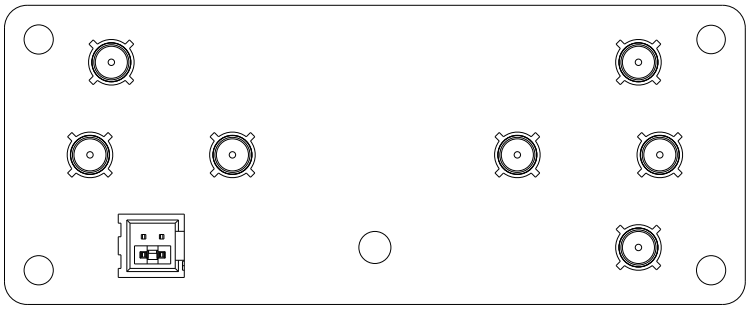

Figure 106: 4-6 N-Way Splitter

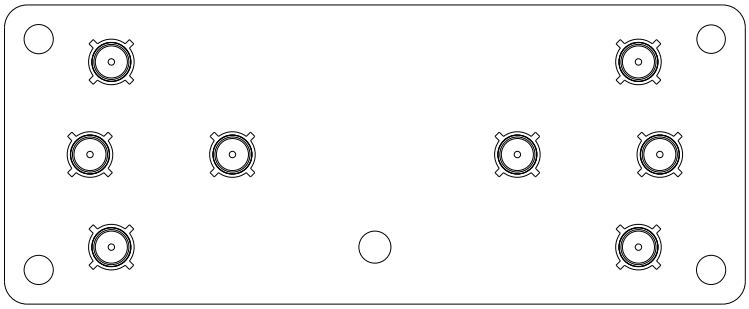

Prerequisites:
Obtain:

- Replacement N-Way splitter
- T20 bit screwdriver
- Electrostatic discharge (ESD) wrist strap (Motorola Solutions part number RSX4015A, or equivalent) that must be worn during the removal and installation of the N-Way splitter.

Procedure:

1. Wear an electrostatic discharge (ESD) strap and connect its cable to a verified good ground.

   CAUTION: Wear the ESD strap throughout the whole procedure to prevent ESD damage to any components.
   ATTENTION: Portez la dragonne ESD tout au long de la procédure pour éviter que les composants soient endommagés par les décharges électrostatiques.

2. Remove N-Way splitter from the power amplifier (PA) card cage by performing one of the following actions:

If…	Then…
If you want to remove the 2-3 N-Way splitter,	perform the following actions: **a.** Label and disconnect all cables attached to the 2-3 N-Way splitter to be replaced. **b.** Note down the location of the shrouded header. **c.** Remove the RF jumper cable and the jumper in the shrouded header. **d.** Remove the screw that secures the board to the card cage by using a T20 bit screwdriver. **e.** Remove the 2-3 N-Way splitter board from the snap-in standoffs. Removing the splitter board may require some manual force to unseat.
If you want to remove the 4-6 N-Way splitter,	perform the following actions: **a.** Label and disconnect all cables attached to the 4-6 N-Way splitter to be replaced. **b.** Remove the screw that secures the board to the card cage by using a T20 bit screwdriver. **c.** Remove the 4-6 N-Way splitter board from the snap-in standoffs. Removing the splitter board may require some manual force to unseat.

3. Install the N-Way combiner in the power amplifier (PA) card cage by performing one of the following actions:

If…	Then…
If you want to install the 2-3 N-Way splitter,	perform the following actions: **a.** Place the replacement 2-3 N-Way splitter into the location of the removed one, and snap it into place. **b.** Secure the screw that secures the board to the card cage by using a T20 bit screwdriver. **c.** Reconnect the RF jumper cable and the jumper in the shrouded header. **d.** Reconnect the remaining cables to the 2-3 N-Way splitter. **e.** Configure the 2-pin jumper, see N-Way Splitter Physical Description on page 36.
If you want to install the 4-6 N-Way splitter,	perform the following actions: **a.** Place the replacement 4-6 N-Way splitter into the location of the removed one, and snap it into place. **b.** Secure the screw that secures the board to the card cage by using a T20 bit screwdriver. **c.** Reconnect all the cables to the 4-6 N-Way splitter.

10.13

Replacing the RMC Modules

You can perform this procedure to replace the individual Site Receive Multi-Coupler (RMC) or Cabinet RMC.

Figure 107: RMC Cage for Site RMC and Cabinet RMC – Fully Populated

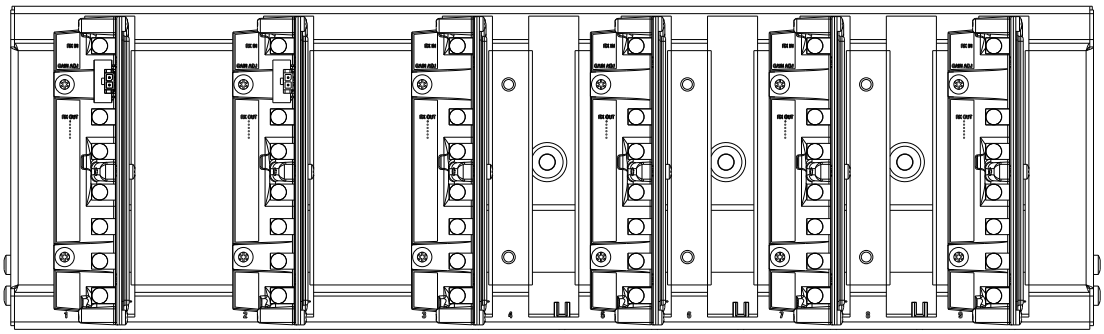

For each preselector in the rack, there is one Site RMC. For each Site RMC there is one Cabinet RMC per six or fewer transceiver modules. In case seven or more transceiver modules in the rack, there are two Cabinet RMCs.

Each Site RMC and its Cabinet RMCs are an independent receive branch. If service is required on a particular RMC in one branch, the other branch does not have to be disturbed. For more information on how to disable one branch for servicing purposes, see Replacing the Site Preselector on page 197.

Prerequisites:

Obtain:

- Replacement RMC module
- T20 bit screwdriver
- Electrostatic discharge (ESD) wrist strap (Motorola Solutions part number RSX4015A, or equivalent) that must be worn during the removal and installation of the RMC Modules.

Procedure:

1. Wear an electrostatic discharge (ESD) strap and connect its cable to a verified good ground.

   CAUTION: Wear the ESD strap throughout the whole procedure to prevent ESD damage to any components.
   ATTENTION: Portez la dragonne ESD tout au long de la procédure pour éviter que les composants soient endommagés par les décharges électrostatiques.

2. Perform one of the following actions:

If…	Then…
If you want to replace the Site RMC,	perform the following actions: **a.** Note down how the RF cables are connected to the RMC module. **b.** Note down the position of the DIP switch gain setting. **c.** Disconnect the RF cables from the RMC module. **d.** Remove the two screws that secure the RMC module by using the T20 bit screwdriver **e.** Slide the RMC module out of the rack. **f.** Install the replacement RMC module by tightening the two screws that secure the RMC module to 17 in-lbs with the T20 bit screwdriver. **g.** Reconnect all the cables to the RMC module. **h.** Ensure that the DIP switch settings are correct.
If you want to replace the Cabinet RMC,	perform the following actions: **a.** Note down how the RF cables are connected to the RMC module. **b.** Disconnect the RF cables from the RMC module. **c.** Remove the two screws that secure the RMC module by using the T20 bit screwdriver **d.** Slide the RMC module out of the rack. **e.** Install the replacement RMC module by tightening the 2 screws that secure the RMC module to 17 in-lbs with the T20 bit screwdriver. **f.** Reconnect all the cables to the RMC module.