MOTOTRBO™ BASE STATION/ REPEATER

PROFESSIONAL DIGITAL TWO-WAY RADIO SYSTEM

SLR 8000 Base Station/ Repeater Basic Service & Installation Manual

JUNE 2018

MN002253A01

© 2018 Motorola Solutions, Inc. All rights reserved

MN002253A01-AD

Notice

Foreword

This manual covers all versions of the MOTOTRBO SLR 8000 Base Station/Repeater, unless otherwise specified. It includes all the information necessary to maintain peak product performance and maximum working time, using levels 1 and 2 maintenance procedures. These levels of service go down to software issues or replacement of an accessory, commonly performed by local service centers, Motorola Solutions Authorized Dealers, self-maintained customers, and distributors.

CAUTION: These servicing instructions are for use by qualified personnel only. To reduce the risk of electric shock, do not perform any servicing other than what is contained in the Operating Instructions unless you are qualified to do so. Refer all servicing to qualified service personnel.

General Safety Precautions

For more information, see General Safety and Installation Standards and Guidelines on page 4.

Copyrights

The Motorola Solutions products described in this document may include copyrighted Motorola Solutions computer programs. Laws in the United States and other countries preserve for Motorola Solutions certain exclusive rights for copyrighted computer programs. Accordingly, any copyrighted Motorola Solutions computer programs contained in the Motorola Solutions products described in this document may not be copied or reproduced in any manner without the express written permission of Motorola Solutions.

© 2018 Motorola Solutions, Inc. All Rights Reserved

No part of this document may be reproduced, transmitted, stored in a retrieval system, or translated into any language or computer language, in any form or by any means, without the prior written permission of Motorola Solutions, Inc.

Furthermore, the purchase of Motorola Solutions products shall not be deemed to grant either directly or by implication, estoppel or otherwise, any license under the copyrights, patents or patent applications of Motorola Solutions, except for the normal non-exclusive, royalty-free license to use that arises by operation of law in the sale of a product.

Disclaimer

Please note that certain features, facilities, and capabilities described in this document may not be applicable to or licensed for use on a specific system, or may be dependent upon the characteristics of a specific subscriber unit or configuration of certain parameters. Please refer to your Motorola Solutions contact for further information.

Trademarks

MOTOROLA, MOTO, MOTOROLA SOLUTIONS, and the Stylized M Logo are trademarks or registered trademarks of Motorola Trademark Holdings, LLC and are used under license. All other trademarks are the property of their respective owners.

European Union (EU) Waste of Electrical and Electronic Equipment (WEEE) directive

The European Union's WEEE directive requires that products sold into EU countries must have the crossed out trash bin label on the product (or the package in some cases).

As defined by the WEEE directive, this cross-out trash bin label means that customers and end-users in EU countries should not dispose of electronic and electrical equipment or accessories in household waste.

Customers or end-users in EU countries should contact their local equipment supplier representative or service centre for information about the waste collection system in their country.

Disclaimer

The information in this document is carefully examined, and is believed to be entirely reliable.

However, no responsibility is assumed for inaccuracies. Furthermore, Motorola Solutions reserves the right to make changes to any products herein to improve readability, function, or design. Motorola Solutions does not assume any liability arising out of the applications or use of any product or circuit described herein; nor does it cover any license under its patent rights nor the rights of others. Controlled copies of this document are available through Motorola Solutions On-Line (MOL).

Trademarks

MOTOROLA, MOTO, MOTOROLA SOLUTIONS and the Stylized M logo are trademarks or registered trademarks of Motorola Trademark Holdings, LLC and are used under license. All other trademarks are the property of their respective owners.

© 2018 Motorola Solutions, Inc.

All rights reserved.

Notice

General Safety and Installation Standards and Guidelines

WARNING:

- For safe installation, operation, service and repair of this equipment, follow the safety precautions and instructions described below, as well as any additional safety information in Motorola Solutions product service and installation manuals and the Motorola Solutions R56 Standards and Guidelines for Communications Sites manual (which can be obtained by ordering CDROM 9880384V83). To obtain copies of these materials, please contact Motorola Solutions as directed at the end of this section. After installation, these instructions should be retained and readily available for any person operating or servicing this repeater or working near it.
- Failure to follow these safety precautions and instructions could result in serious injury or property damage.
- The installation process requires preparation and knowledge of the site before installation begins. Review installation procedures and precautions in the Motorola Solutions R56 manual before performing any site or component installation. Personnel must use safe work practices and good judgment, and always follow applicable safety procedures, such as requirements of the Occupational Safety and Health Administration (OSHA), the National Electrical Code (NEC), and local codes.

The following are additional general safety precautions that must be observed:

- To continue compliance with any applicable regulations and maintain the safety of this equipment, do not install substitute parts or perform any unauthorized modifications.
- All equipment must be serviced by Motorola Solutions trained personnel.
- If troubleshooting the equipment while the power is on, be aware of live circuits which could contain hazardous voltage.
- Do not operate the radio transmitters unless all RF connectors are secure and all connectors are properly terminated.
- All equipment must be properly grounded in accordance with the Motorola Solutions R56 and specified installation instructions for safe operation.
- Slots and openings in the cabinet are provided for ventilation. Do not block or cover openings that protect the devices from overheating.
- Some equipment components can become extremely hot during operation. Turn off all power to the equipment and wait until sufficiently cool before touching.
- Maintain emergency first aid kits at the site.
- Never store combustible materials in or near equipment racks. The combination of combustible material, heat and electrical energy increases the risk of a fire hazard.
  Equipment shall be installed in a site that meets the requirements of a "restricted access location", per (UL60950-1 & EN60950-1), which is defined as follows: "Access can only be gained by service persons or by users who have been instructed about the reasons for the restrictions applied to the location and about any precautions that shall be taken; and access is

through the use of a tool or lock and key, or other means of security, and is controlled by the authority responsible for the location."

- Burn hazard. The metal housing of the product may become extremely hot. Use caution when working around the equipment.
- RF energy burn hazard. Disconnect power in the cabinet to prevent injury before disconnecting and connecting antennas.
- Shock hazard. The outer shields of all Tx and Rx RF cables outer shields must be grounded per Motorola Solutions R56 manual.
- Shock hazard. DC input voltage shall be no higher than 60 VDC. This maximum voltage shall include consideration of the battery charging "float voltage" associated with the intended supply system, regardless of the marked power rating of the equipment.
- All Tx and Rx RF cables shall be connected to a surge protection device according to Motorola Solutions R56 manual. Do not connect Tx and Rx RF cables directly to an outside antenna.
- Attention Compliance with National and International standards and guidelines for human exposure to Electromagnetic Energy (EME) at Transmitter Antenna sites generally requires that persons having access to a site shall be aware of the potential for exposure to EME and can exercise control of exposure by appropriate means, such as adhering to warning sign instructions. See this installation manual and Appendix A of Motorola Solutions R56.

This product complies with the requirements set forth by the European R&TTE regulations and applicable CENELEC standards concerning human exposure to Electromagnetic Energy (EME) at Transmitter Antenna sites. MOTOTRBO Repeater – EME ASSESSMENT on page 215 in this manual includes an EME exposure analysis of a typical system configuration for this product.

For a different system configuration than the typical configuration, compliance with applicable EME exposure standards (current versions of the EN50384 and EN50385 standards for occupational and general public exposure, respectively) can be evaluated by either employing the method illustrated in the typical system configuration EME exposure analysis included in MOTOTRBO Repeater – EME ASSESSMENT on page 215 in this manual, or employing another suitable method among those described in the current version of the EN50383 standard.

Once the occupational and general public compliance boundaries are determined, means to ensure that workers and people are outside the respective boundaries, for instance using appropriate signage or restricted access, should be implemented; if this is not possible or practically achievable for the specific system configuration, the configuration should be modified in order to make it possible. The R56 Standards and Guidelines for Communications Sites manual (which can be obtained by ordering CDROM 9880384V83) provides examples of signage that can be used to identify the occupational or general public compliance boundaries.

Refer to product specific manuals for detailed safety and installation instructions. Manuals can be obtained with product orders, downloaded from https://businessonline.motorolasolutions.com, or purchased through the Motorola Solutions Aftermarket & Accessory Department.

WARNING: This is a class A product. In a domestic environment, this product may cause radio interference in which case the user may be required to take adequate measures.

Notice

Part 68 FCC Guideline

This section applies when the SLR 8000 Base Station/Repeater is equipped with the optional Wireline Interface Board.

This equipment complies with Part 68 of the FCC rules and the requirements adopted by the ACTA. On the rear of this equipment is a label that contains, among other information, the registration number:

US: ABZNINANPML6730

If requested, this number must be provided to the telephone company.

The connector used to connect this equipment to the premises wiring and telephone network must comply with the applicable FCC Part 68 rules and requirements adopted by the ACTA. A compliant connector is provided with this product. See Installation instructions for details.

REN: N/A

Connector: RJ1DC

Authorized Network Port: 04NO2

Service Order Code: 7.0Y

If the equipment causes harm to the telephone network, the telephone company will notify you in advance that temporary discontinuance of service may be required. But if advance notice is not practical, the telephone company will notify you as soon as possible. Also, you will be advised of your right to file a complaint with the FCC if you believe it is necessary.

The telephone company may make changes in its facilities, equipment, operations, or procedures that could affect the operation of the equipment. If this happens, the telephone company will provide advance notice in order for you to make necessary modifications to maintain uninterrupted service.

If you experience trouble with this equipment, please refer to for repair and warranty information. If the equipment is causing harm to the telephone network, the telephone company may request that you disconnect the equipment until the problem is resolved.

None of the circuit boards in this equipment are field repairable. For assistance in sending the boards back for repair, please contact the Service Center listed in Replacement Parts Ordering on page 195 .

This equipment cannot be used on public coin phone service provided by the telephone company. Connection to party line service is subject to state tariffs. Contact the state public utility commission, public service commission or corporation commission for information.

Notice

MOTOTRBO SLR 8000 Base Station/ Repeater Supplemental Safety and Installation Requirements

IMPORTANT:

- The MOTOTRBO SLR 8000 Base Station/Repeater must be installed in a suitable, in-building enclosure. A restricted access location is required when installing this equipment into the end system.
- The base station/repeater contains a Class 1 built-in power supply component. It is equipped with an appliance inlet for connecting to an AC input, as well as DC input terminals which meet SELV DC circuit requirements.
- When installing the equipment, all requirements of relevant standards and local electrical codes must be fulfilled.
- The maximum operating ambient temperature of this equipment is 60 °C. The maximum operating altitude is 5000 meters above sea level.
- The 15.75 VDC output from the power supply to the PA is at an energy hazard level (exceeds 240 VA). When installing into the end system, care must be taken so as not to touch the output wires.
- When the SLR 8000 Base Station/Repeater is used in a DC reverting system, the DC power supply must be located in the same building as the MOTOTRBO SLR 8000 Base Station/ Repeater, and it must meet the requirements of a SELV circuit.

Notice

Environmental Information

Material Content

This is to declare that Motorola Solutions products comply with the EU Directive 2011/65/EU (Restriction of Hazardous Substance or RoHS-2) and India RoHS, including applicable exemptions, concerning the following substances:

- Lead (Pb) < 0.1% by weight (1000 ppm)
- Mercury (Hg) < 0.1% by weight (1000 ppm)
- Cadmium (Cd) < 0.01% by weight (100 ppm)
- Hexavalent Chromium (Cr6+) < 0.1% by weight (1000 ppm)
- Polybrominated Biphenyls (PBB) < 0.1% by weight (1000 ppm)
- Polybrominated Diphenyl Ethers (PBDE) < 0.1% by weight (1000 ppm)

NOTICE:

- The Motorola Solutions MOTOTRBO SLR 8000 Base Station/Repeater system and its subsystems have been created in compliance with the environmental goals of the European Union's Restriction of Hazardous Substances (RoHS 2) Directive 2011/65/EU and the Waste Electrical and Electronic Equipment (WEEE) Directive 2012/19/EU as well as Motorola Solutions corporate goals to minimize environmental impact of its products.
- This Motorola Solutions policy is reflected throughout the entire design, procurement, assembly, and packaging process.
- In support of these efforts to provide environmentally-responsible products, comply with the information in the following sections regarding product disposal for systems being replaced.

Disposal of your Electronic and Electric Equipment

Do not dispose of electronic and electric equipment or electronic and electric accessories with your household waste.

In some countries or regions, collection systems have been set up to handle waste of electrical and electronic equipment.

In European Union countries, contact your local equipment supplier representative or service center for information about the waste collection system in your country.

Disposal Guideline

The European Union's WEEE directive symbol on a Motorola Solutions product indicates that the product should not be disposed of with household waste.

Document History

The following major changes have been implemented in this manual since the previous edition:

Edition	Description	Date
MN002253A01-AA	Initial Release	May 2016
MN002253A01-AB	Added Auto Test and Tune Support and Battery Charger only Mode	November 2016
MN002253A01-AC	The Wireline DC Remote Jumper and E&M Jumper configurations have updated.	June 2017
MN002253A01-AD	Added 800/900 MHz Band Information. Updated Table 30 Auxiliary Connector and Table 33 Frequency Reference. Updated step 8 of Section 10.7.3 Tuning the Modulation Limit (with Tx Data or PL) and Section 10.7.4 Verifying the Modulation Limit (with Tx Data or PL). Updated Section 14.3.1.3 Tuning the Preselector (Preferred Method). Updated Appendix F: MOTOTRBO Repeater EME Assessment - changed references of EN 50385: 2002 to EN 50385: 2017.	June 2018

Contents

Document History. **9**
List of Figures **19**
List of Tables **24**
Related Publications **26**
Summary of Bands Available. **27**
Limited Commercial Warranty. **28**
Chapter 1: SLR 8000 Base Station/Repeater **31**
1.1 Notations Used in This Manual 31
1.2 Description 31
1.3 Operating Features 33
1.4 Frequency Ranges and Power Levels 35
1.5 Specifications 36
1.6 Theory of Operation 38
1.7 Basic Base Station/Repeater Level Troubleshooting – RDAC and LEDs 40
1.8 Model Chart 42
1.8.1 VHF High Power Model Chart 42
1.8.2 UHF1 High Power Model Chart 43
1.8.3 800/900 MHz High Power Model Chart 43
Chapter 2: SLR 8000 Satellite Receiver **44**
2.1 Satellite Receiver Description 44
2.2 Operating Features 44
2.3 Frequency Ranges 44
2.4 Specifications 44
2.5 Configuration 44
2.6 Basic Station Level Troubleshooting – RDAC and LEDs 45
2.7 Satellite Receiver System (Analog) 45
Chapter 3: SLR 8000 Modem. **47**
3.1 Description 47
3.1.1 General Description 48
3.1.2 Input and Output Connections 48
3.1.3 Frequency Bands 49
3.2 Receiver Subsystem 49
3.2.1 Receiver Subsystem Specifications 50
3.3 Transmitter Exciter Subsystem 50
3.3.1 Transmitter Exciter Subsystem Specifications 51

3.4 Station Control Subsystem 51
3.4.1 High Stability Reference Block 52
3.4.2 Audio 52
3.5 Station Control Front Panel Interface Connector 52
3.6 Station Control Rear Panel Connections 53
3.7 Station Control Power Amplifier Interface Connector 53
3.8 Station Control Power Supply Interface Connector 53
3.9 Station Control Expansion Board Interface Connector 53
3.10 Station Control Chassis ID Interface Connector 54
3.11 Station Control Wireline/Aux Board Interface Connector 54
Chapter 4: SLR 8000 Power Amplifier. 55
4.1 Description 55
4.2 General Description 55
4.3 Input and Output Connections 55
4.4 Frequency Ranges 56
4.5 Specifications 57
4.6 Modem Interface 57
Chapter 5: SLR 8000 Power Supply 58
5.1 Description 58
5.1.1 General Description 58
5.2 Specifications 60
5.3 Power Supply Interface 61
5.3.1 Power Source Inputs 61
5.3.2 Power Supply Outputs 62
5.3.3 Power Supply Digital Interface 63
5.3.4 Power Supply Output Cable Signaling 63
Chapter 6: SLR 8000 Front Panel 65
6.1 Description 65
6.1.1 General Description 65
6.2 Input and Output Connections 65
6.3 Modem Interface 66
6.4 USB Interface. 66
6.5 LED Indicators 66
6.6 Speaker Volume Adjust Buttons 66
6.7 Microphone 67
Chapter 7: SLR 8000 Back Panel. 68
7.1 Description 68
7.1.1 General Description 68
7.2 Back Panel Interfaces 69

7.2.1 AC Power Inlet. ... 69
7.2.2 DC Power Inlet/DC Charger Outlet ... 70
7.2.3 Option 1/GNSS. ... 71
7.2.4 Option 2/WLAN. ... 71
7.2.5 USB. ... 71
7.2.6 Ethernet 1. ... 71
7.2.7 Ethernet 2. ... 72
7.2.8 Auxiliary (Aux) ... 73
7.2.9 Frequency Reference ... 75
7.2.10 Receiver RF ... 76
7.2.11 Transmitter RF. ... 76
7.2.12 Bonding Ground Connection ... 77
7.2.13 Wireline 1 (WL1) ... 77
7.2.14 Wireline 2 (WL2) ... 78
7.2.15 GPIO 1. ... 79
7.2.16 GPIO 2. ... 80
7.2.17 GPIO 3. ... 81
7.2.18 RF Antenna Relay ... 82
7.2.19 P-TEMP. ... 83

Chapter 8: SLR 8000 Test Equipment And Service Aids ... 84

8.1 Recommended Test Equipment ... 84
8.2 Service Aids ... 84

Chapter 9: SLR 8000 Performance Check or Testing. ... 85

9.1 Performance Check or Testing General Description ... 85
9.2 Transmitter Testing. ... 85
9.2.1 Introduction ... 85
9.2.2 Required Transmitter Test Equipment ... 85
9.2.3 Verifying Transmitter Circuitry ... 86
9.3 Receiver Testing ... 87
9.3.1 Introduction ... 88
9.3.2 Required Test Equipment ... 88
9.3.3 Verifying Receiver Circuitry ... 88
9.4 Auto Test and Tune Support. ... 90

Chapter 10: SLR 8000 Programming and Tuning ... 91

10.1 Programming and Tuning Introduction ... 91
10.2 Customer Programming Software Setup ... 91
10.3 Tuning the Reference Oscillator Alignment ... 93
10.4 Base Station/Repeater Tuning Setup ... 93
10.5 Tuning the Rx Audio Level Set ... 94

10.6 Tuning the Tx Audio Level Set 95
10.7 Modulation Limit Alignment 96
10.7.1 Tuning the Modulation Limit (with no Tx Data and no PL).....96
10.7.2 Verifying the Modulation Limit (with no Tx Data and no PL).....97
10.7.3 Tuning the Modulation Limit (with Tx Data or PL) 98
10.7.4 Verifying the Modulation Limit (with Tx Data or PL).....99
10.8 Tuning the Wireline Receive Level 99
10.9 Tuning the Wireline Rx Equalization – 2800 Hz 100
10.10 Tuning the Wireline Rx Equalization – 400 Hz 102
10.11 Tuning the Wireline Transmit Level 103
10.12 Tuning the Wireline Squelch Level 105
10.13 Tuning the Wireline Status Tone Level (Analog Voting).....106
10.14 Changing to Battery Charger Only Mode 108
Chapter 11: SLR 8000 Maintenance and Disassembly/Reassembly 109
11.1 Introduction 109
11.2 Routine Maintenance.....109
11.3 Preventive Maintenance 109
11.3.1 Inspection 109
11.3.2 Cleaning Procedures 109
11.4 Safe Handling of CMOS and LDMOS Devices.....110
11.5 Disassembling and Reassembling the External Circulator Tray.....111
11.6 Disassembly 113
11.6.1 Removing the Covers 113
11.6.2 Removing the Front Bezel 114
11.6.3 Removing the Faceplate.....115
11.6.4 Disassembling the Faceplate 115
11.6.5 Removing the Fan Module 116
11.6.6 Removing the Bezel Clip 116
11.6.7 Disconnecting the Cables 117
11.6.8 Removing the Power Supply Module 118
11.6.9 Removing the Modem Module.....118
11.6.10 Removing the Power Amplifier Module 119
11.6.11 Removing the Back Panel 120
11.7 Reassembly.....120
11.7.1 Replacing the Bottom Cover.....120
11.7.2 Replacing the Power Amplifier Module (for Base Station/Repeater without Preselector Module) 120
11.7.3 Replacing the Power Amplifier Module (for Base Station Repeater with Preselector Module) 121
11.7.4 Replacing the Modem Module.....122

11.7.5 Replacing the Power Supply (for Base Station/Repeater without Wireline Card) 123
11.7.6 Replacing the Power Supply (for Base Station/Repeater with Wireline Card) 124
11.7.7 Replacing the Back Panel 125
11.7.8 OPTIONAL - Replacing the Antenna Relay 126
11.7.9 Replacing the Receive Cable 127
11.7.10 Replacing the Faceplate 128
11.7.11 Replacing the Cables 129
11.7.12 Replacing the Bezel Clip 131
11.7.13 Replacing the Fan 131
11.7.14 Installing the Option Plugs 133
11.7.15 Replacing the Covers 134
11.7.16 Replacing the Front Bezel 135
11.8 Exploded Mechanical View 136
11.9 Parts List. 136
11.10 Torque Charts 137
Chapter 12: SLR 8000 Installation 138
12.1 Pre-Installation Considerations 138
12.1.1 Installation Overview 138
12.1.2 Site Environmental Conditions 138
12.1.3 Equipment Ventilation 139
12.1.3.1 Mounting in a Cabinet 139
12.1.3.2 Mounting in a Rack 139
12.1.4 AC and DC Input Power Requirements 139
12.1.4.1 AC Input Power Requirements 139
12.1.4.2 DC Input Power Requirements 140
12.1.4.3 Ground Connection 140
12.1.4.4 Battery Connection 140
12.1.4.5 RF Antenna Connections 141
12.1.4.6 System Cable Connections 141
12.1.5 Equipment Mounting Methods 141
12.1.5.1 Floor-Mounted Cabinet 141
12.1.5.2 Modular Racks 142
12.1.6 Site Grounding and Lightning Protection 143
12.1.6.1 Electrical Ground 144
12.1.6.2 RF Ground. 144
12.1.6.3 Lightning Ground 144
12.1.6.4 Equipment Grounding 144
12.1.7 Recommended Tools and Equipment 144
12.1.8 Equipment Unpacking and Inspection 145

12.2 Mechanical Installation 146
12.2.1 Mounting Procedures 146
12.2.1.1 Transferring Equipment from Shipping Container to Rack or Cabinet... 146
12.2.1.2 Installing Racks.....146
12.2.1.3 Cabinet Installation 147
12.3 Post Installation Checklist.....147
12.3.1 Apply Power.....147
12.3.2 Verify Proper Operation.....147
12.3.3 Front Panel LEDs 148
12.3.4 Base Station/Repeater Codeplug Data Backup 148
12.4 Installing Base Station/Repeater Hardware Options.....148
12.4.1 General Bonding and Grounding Requirements 148
12.4.2 General Cabling Requirements 148
Chapter 13: SLR 8000 Wireline.....149
13.1 Description.....149
13.1.1 General Description.....149
13.1.2 Input and Output Connections.....149
13.2 Specifications 150
13.3 Board Configuration.....151
13.3.1 DC Remote Jumper Configuration.....151
13.3.2 E&M Jumper Configuration.....151
13.3.3 Configuring the Wireline Board in CPS 152
13.3.3.1 Choosing a Remote Control Mode.....152
13.3.3.2 Other Wireline Configuration Options.....154
13.4 Tone Remote Control 154
13.5 DC Remote Control 155
13.6 Voting.....156
Chapter 14: SLR 8000 Radio Frequency Distribution System (RFDS) Equipment.....157
14.1 General Description.....158
14.1.1 Base Station/Repeater Preselectors 158
14.1.2 Duplexer 159
14.1.3 External Dual Circulator Tray.....159
14.1.4 Antenna Relay 161
14.2 Specifications 162
14.2.1 Base Station/Repeater Preselectors 162
14.2.2 Duplexer 163
14.2.3 External Dual Circulator Tray.....164
14.2.4 Antenna Relay 165

14.3 Field Tuning Procedures 166
14.3.1 Base Station/Repeater Preselectors 166
14.3.1.1 Test Equipment 166
14.3.1.2 Setting Up the Equipment 167
14.3.1.3 Tuning the Preselector (Preferred Method) 168
14.3.1.4 Tuning the Preselector (Alternate Method) 173
14.3.2 Duplexer 174
14.3.2.1 Duplexer Tuning Procedures (with Basic Instruments) 174
14.3.2.2 Duplexer Tuning Procedures (with Advanced Instruments) 184
Appendix A: Accessories 191
A.1 Introduction. 191
A.1.1 Cables 191
A.1.2 Documentation 191
A.1.3 Duplexer 191
A.1.4 Mounting 192
A.1.5 Preselectors 192
A.1.6 Service Kits 192
A.1.7 Service Parts. 193
A.1.8 Service Tools. 193
A.1.9 Microphone 193
A.1.10 Miscellaneous 194
Appendix B: Replacement Parts Ordering. 195
B.1 Replacement Parts Ordering 195
B.1.1 Basic Ordering Information 195
B.1.2 Motorola Solutions Online 195
B.1.3 Mail Orders. 195
B.1.4 Telephone Orders 195
B.1.5 Fax Orders 196
B.1.6 Parts Identification. 196
B.1.7 Product Customer Service 196
Appendix C: Motorola Solutions Service Centers. 197
C.1 Motorola Solutions Service Centers 197
C.1.1 Servicing Information 197
C.1.2 Motorola Solutions Service Center 197
C.1.3 Motorola Solutions Federal Technical Center 197
C.1.4 Motorola Solutions Canadian Technical Logistics Center 197
Appendix D: SLR 8000 Third-Party Controllers. 198
D.1 Overview. 198
D.2 Community Repeater Panel 199

D.2.1 Compatibility....199
D.2.2 Hardware Connections 199
D.2.3 CPS Configuration 200
D.2.4 Community Repeater Panel Settings....201
D.2.4.1 Discriminator 201
D.2.4.2 Tx Audio. 202
D.2.4.3 Continuous Tone-Controlled Squelch Systems (CTCSS) Out....202
D.2.4.4 Tx Audio Pre-Emphasis 202
D.2.4.5 Carrier Operated Relay (COR)....202
D.3 Phone Patch 202
D.3.1 Compatibility....203
D.3.2 Hardware Connections 203
D.3.3 CPS Configuration 204
D.3.4 Phone Patch Level Settings....205
D.4 Tone Remote Adapter....205
D.4.1 Tone Remote Adapter Compatibility....206
D.4.2 Hardware Connections 206
D.4.3 CPS Configuration (For a 15 Channel Remote Control)....207
D.4.4 Tone Remote Adapter Settings....208
D.4.4.1 Radio Rx....208
D.4.4.2 Radio Tx. 209
D.4.4.3 Channel Steering 209
D.4.4.4 Monitoring....209
D.4.4.5 PTT....209
D.4.4.6 Wildcard 1 (optional) 209
D.5 Trunking Controllers....209
D.5.1 Compatibility....210
D.5.2 Hardware Connections 210
D.5.3 CPS Configuration 211
D.5.4 Trunking Controller Settings 212
D.5.4.1 Discriminator 212
D.5.4.2 Tx Audio. 212
D.5.4.3 Tx Data. 212
Appendix E: Audio Enhancement....213
E.1 Overview. 213
E.1.1 Hear Clear Feature with Third-Party Controllers....213
E.1.2 Third-Party Controller and the Subscriber Configuration for Hear Clear Feature..213
E.1.3 Hear Clear Feature Configuration in Repeater Mode 214

E.1.4 Companding Feature Configuration Between Third-Party Controllers and Subscriber 214
E.1.5 Companding Feature Configuration Between the Repeater and Subscribers 214
Appendix F: MOTOTRBO Repeater – EME ASSESSMENT 215
F.1 Executive Summary. 215
F.2 Outdoor Exposure Prediction Model 216
F.2.1 Exposure in Front of the Antenna. 216
F.2.2 Exposure at Ground Level 217
F.3 Typical System Configuration 218
F.4 Exposure Limits. 218
F.5 EME Exposure Evaluation 219
F.5.1 Exposure in Front of the Antenna. 219
F.5.2 Exposure at Ground Level 219
F.6 Compliance Boundary Description 219
F.7 Product Put In Service. 220
F.8 References. 220
Glossary of Terms and Acronyms 221

List of Figures

Figure 1: Front view of the SLR 8000 Base Station/Repeater 32
Figure 2: Rear view of the SLR 8000 Base Station/Repeater (with no options installed) 32
Figure 3: Front view (without top cover) of the SLR 8000 Base Station/Repeater (with no options installed) 33
Figure 4: Front view (without top and bottom covers) of the SLR 8000 Base Station/Repeater....33
Figure 5: RDAC Diagnostic Screen 40
Figure 6: "Operation Mode" configuration for Satellite Receiver Functionality....45
Figure 7: Satellite Receiver Connections Within a Voting System 46
Figure 8: Modem Module Connector Locations....48
Figure 9: High Stability Reference Circuit....52
Figure 10: Audio Block Diagram....52
Figure 11: Power Amplifier Interface Connector Pin Locations....53
Figure 12: Power Supply Interface Connector Pin Locations....53
Figure 13: Expansion Board Interface Connector Pin Locations....54
Figure 14: Chassis ID Interface Connector Pin Locations....54
Figure 15: Input and Output Connections 56
Figure 16: Modem Interface Connector Pin Locations 57
Figure 17: Front View of the SLR 8000 Power Supply....59
Figure 18: Rear View of the SLR 8000 Power Supply 59
Figure 19: Power Source Inputs....61
Figure 20: Power Supply Outputs 62
Figure 21: Power Supply Digital Interface 63
Figure 22: Front Panel Input Connections....65
Figure 23: Front Panel Output Connections....66
Figure 24: Back Panel Connector Names and Locations (with no options installed) 68
Figure 25: Back Panel Connector Names and Locations....69
Figure 26: AC Power Inlet Connector....70
Figure 27: Repeater Power Switch....70
Figure 28: DC Power Inlet/DC Charger Outlet Connector....70
Figure 29: Option 1/GNSS Connector 71
Figure 30: Option 2/WLAN Connector....71
Figure 31: USB Connector 71
Figure 32: Ethernet 1 Connector 72
Figure 33: Ethernet 2 Connector 72
Figure 34: Auxiliary Connector 73
Figure 35: Frequency Reference Connector 75

Figure 36: Receiver RF Connector 76
Figure 37: Transmitter RF Connector 76
Figure 38: Bonding Ground Connection 77
Figure 39: RJ-45 Connector (Wireline 1) 77
Figure 40: RJ-45 Connector (Wireline 2) 78
Figure 41: RJ-45 Connector (GPIO 1) 79
Figure 42: RJ-45 Connector (GPIO 2) 80
Figure 43: RJ-45 Connector (GPIO 3) 81
Figure 44: RF Antenna Relay Connectors 82
Figure 45: P-TEMP Connector 83
Figure 46: Backside - Test Equipment Setup for Verifying Transmitter Circuitry 87
Figure 47: Frontside - Test Equipment Setup for Verifying Transmitter Circuitry 87
Figure 48: Backside - Test Equipment Setup for Verifying Receiver Circuitry 89
Figure 49: Frontside - Test Equipment Setup for Verifying Receiver Circuitry 89
Figure 50: Customer Programming Software Setup 92
Figure 51: Front view of SLR 8000 Base Station/Repeater 92
Figure 52: Rear view of SLR 8000 Base Station/Repeater 92
Figure 53: Tx Menu Tree (Ref. Oscillator) 93
Figure 54: SLR 8000 Base Station/Repeater Tuning Equipment Setup 94
Figure 55: Rx Menu tree (Rx Rated Volume) 94
Figure 56: Auxiliary Connector 95
Figure 57: Tx Menu Tree (Tx Audio Level) 95
Figure 58: TX Menu Tree (Tuning Procedure with No Tx Data) 97
Figure 59: Example of Maximum Deviation Limit Calculation 99
Figure 60: Rx Menu tree (Wireline Receive Level) 100
Figure 61: Rx Menu tree (Wireline Rx Equalization – 2800 Hz) 101
Figure 62: Rx Menu tree (Wireline Rx Equalization – 400 Hz) 102
Figure 63: Tx Menu tree (Wireline Transmit Level) 104
Figure 64: Tx Menu tree (Wireline Squelch Level) 106
Figure 65: Rx Menu Tree (Wireline Status Tone Level) 107
Figure 66: Removing Bottom Cover from Base Station/Repeater 113
Figure 67: Removing Top Cover from Base Station/Repeater 114
Figure 68: Removing Front Bezel from Base Station/Repeater 114
Figure 69: Disconnecting Flex Cable from Modem 115
Figure 70: Removing Faceplate from Base Station/Repeater Frame 115
Figure 71: Disengaging Latch on Fan Clip 116
Figure 72: Removing Screws from Bezel Clip 117
Figure 73: Removing Cables 118
Figure 74: Removing Power Supply Module 118

Figure 75: Removing Modem Module 119
Figure 76: Removing Power Amplifier 119
Figure 77: Securing Bottom Cover to Base Station/Repeater 120
Figure 78: Installing the Power Amplifier Module 121
Figure 79: Installing the Power Amplifier Module and Preselector Module 122
Figure 80: Securing Modem Gasket Seal 123
Figure 81: Securing Modem to Base Station/Repeater Chassis 123
Figure 82: Securing Power Supply to Base Station/Repeater Chassis 124
Figure 83: Securing Power Supply with Wireline Card to Base Station/Repeater Chassis 125
Figure 84: Securing Back Panel to Base Station/Repeater 126
Figure 85: Securing Antenna Relay Module 127
Figure 86: Installing RX Cables 128
Figure 87: Installing Front Panel to Modem Flex Cable 128
Figure 88: Aligning Faceplate to Front of Base Station/Repeater 129
Figure 89: Securing Faceplate to Base Station/Repeater 129
Figure 90: Cable Installation 130
Figure 91: Option Cable Installation 131
Figure 92: Installing Bezel Clip 131
Figure 93: Securing and Positioning the Rubber Isolators 132
Figure 94: Installing Fan 133
Figure 95: Installing Expansion Board Plugs 133
Figure 96: Installing Antenna Relay and Brown Wire Plugs 134
Figure 97: Installing Top Cover 134
Figure 98: Installing Bottom Cover 135
Figure 99: Securing Front Bezel 135
Figure 100: SLR 8000 Assembly Exploded View 136
Figure 101: Floor Mount Cabinet 142
Figure 102: Modular Rack 143
Figure 103: Wireline Board Jumpers and Input/Output Connections 150
Figure 104: Location of Jumpers on the P1200_3 Connector 151
Figure 105: Location of Jumpers on the P2301_1 Connector 152
Figure 106: Wireline Audio Configuration in CPS 152
Figure 107: Setting Remote Control Mode 153
Figure 108: Setting 2-Wire/4-Wire Mode 153
Figure 109: Setting Wireline TRC Functions 154
Figure 110: Timing Requirements for a Valid Tone Remote Control Sequence 154
Figure 111: Valid Amplitudes for Tone Remote Control Signaling 155
Figure 112: Rx Guard Tone and Status Tone Levels 156
Figure 113: Base Station/Repeater Preselector (UHF version shown) 158

Figure 114: Duplexer (UHF version shown) ... 159
Figure 115: Duplexer (800 MHz version shown) ... 159
Figure 116: External Dual Circulator Tray (UHF version shown) ... 160
Figure 117: External Dual Circulator Tray (800 MHz version shown) ... 160
Figure 118: Typical Antenna Relay Module – Inputs/Outputs ... 161
Figure 119: Connecting Preselector to the NWA ... 168
Figure 120: Initial Curve (Start 400 MHz, Stop 620 MHz) ... 169
Figure 121: Initial Curve (Start 400 MHz, Stop 505 MHz) ... 169
Figure 122: Passband Tuning of Tuning Screw 1 to the New Passband ... 170
Figure 123: Passband Tuning of Tuning Screw 2 to the New Passband ... 170
Figure 124: Passband Tuning of Tuning Screw 3 to the New Passband ... 171
Figure 125: Passband and Return Loss after Rough Tuning ... 171
Figure 126: Return Loss ... 171
Figure 127: Result after Fine Tuning ... 172
Figure 128: Connecting Preselector to the NWA ... 173
Figure 129: Preliminary Tasks Prior to Tuning Duplexer ... 175
Figure 130: Untuned LO SIDE–Cavity 1 ... 186
Figure 131: Tuned CH1 - LO SIDE–Cavity 1 ... 186
Figure 132: Tuned CH1, CH2 - LO SIDE–Cavity 1 ... 186
Figure 133: Untuned HI SIDE–Cavity 4 ... 187
Figure 134: Tuned CH1 - HI SIDE–Cavity 4 ... 187
Figure 135: Tuned CH1, CH2 - HI SIDE–Cavity 4 ... 188
Figure 136: LO Side Response Curves ... 188
Figure 137: HI Side Response Curves ... 189
Figure 138: After Fine Tuning–LO Side Response Curves ... 189
Figure 139: After Fine Tuning–HI Side Response Curves ... 189
Figure 140: UHF Duplexer Field Tuning Procedure (continued) ... 190
Figure 141: CPS Settings to Configure SLR 8000 Base Station/Repeater for Analog Mode ... 198
Figure 142: Model Zetron 38 Repeater Panel ... 199
Figure 143: Signal Connections between SLR 8000 Base Station/Repeater and Community Repeater Panel ... 200
Figure 144: CPS Configuration for Community Repeater Panel (1 of 2) ... 201
Figure 145: CPS Configuration for Community Repeater Panel (2 of 2) ... 201
Figure 146: Zetron Model 30 Phone Patch ... 202
Figure 147: Signal Connections between SLR 8000 Base Station/Repeater and Zetron Model 30 Phone Patch (Analog Phone Patch Cable and Digital Phone Patch Cable) ... 203
Figure 148: CPS Configuration for Phone Patch (1 of 2) ... 204
Figure 149: CPS Configuration for Phone Patch (2 of 2) ... 205
Figure 150: Model L3276 Tone Remote Adapter ... 206

Figure 151: Signal Connections Between SLR 8000 Base Station/Repeater and Motorola Solutions L3276 25-Pin Connector for a 15-Channel Remote Control 207

Figure 152: CPS Configuration for L3276 Tone Remote Adapter (For a 15-Channel Remote Control) 208

Figure 153: Model Trident's Marauder 209

Figure 154: Model Trident's Raider 210

Figure 155: Model Trident's NTS 210

Figure 156: Signal connections between SLR 8000 Base Station/Repeater, Trident Model Raider, Marauder, and NTS 211

Figure 157: CPS Configuration for Trident Model Raider, Marauder and NTS 212

Figure 158: Reference Frame for the Point of Interest (POI) Cylindrical Coordinates 216

Figure 159: Schematic of the Ground-Level Exposure Model Adopted for the Assessment 218

Figure 160: Compliance Boundary for General Public (GP) and Ocupational (OCC) Exposure 220

List of Tables

Table 1: SLR 8000 Frequency Ranges and Power Levels 35
Table 2: SLR 8000 Base Station/Repeater General Specifications (All Bands) 36
Table 3: SLR 8000 Base Station/Repeater Specifications 36
Table 4: Front Panel LED Indicators 41
Table 5: SLR 8000 Front Panel LED Definitions 41
Table 6: Callout Legend 48
Table 7: Specifications of Receiver Subsystem 50
Table 8: Specifications of Transmitter Exciter Subsystem 51
Table 9: Callout Legend 56
Table 10: Specifications of Power Amplifier 57
Table 11: Callout Legend 59
Table 12: Callout Legend 59
Table 13: Power Supply AC Performance Specifications 60
Table 14: Power Supply DC Performance Specifications 60
Table 15: Power Supply Battery Charger Performance Specifications 60
Table 16: Callout Legend 61
Table 17: Callout Legend 62
Table 18: Callout Legend 63
Table 19: Power Supply Output Cable SIgnalling 63
Table 20: Callout Legend 65
Table 21: Callout Legend 66
Table 22: Connector Type and Primary Function 68
Table 23: Connector Type and Primary Function 69
Table 24: AC Power Inlet Connector 70
Table 25: Callout Legend 70
Table 26: DC Power Inlet/DC Charger Outlet Connector 70
Table 27: USB Connector 71
Table 28: Ethernet 1 Connector 72
Table 29: Ethernet 2 Connector 72
Table 30: Auxiliary Connector 73
Table 31: Frequency Reference 76
Table 32: Functional Characteristics of RJ-45 Connector (Wireline 1) 77
Table 33: Functional Characteristics of RJ-45 Connector (Wireline 2) 78
Table 34: Functional Characteristics of RJ-45 Connector (GPIO1) 79
Table 35: Functional Characteristics of RJ-45 Connector (GPIO 2) 80
Table 36: Functional Characteristics of RJ-45 Connector (GPIO 3) 81

Table 37: Recommended Test Equipment....84
Table 38: Callout Legend 87
Table 39: Callout Legend 89
Table 40: Callout Legend 92
Table 41: Callout Legend 92
Table 42: Callout Legend 114
Table 43: Callout Legend 133
Table 44: SLR 8000 Exploded View Parts List 136
Table 45: FRU Part Number by Band 137
Table 46: Torque Specifications for Nuts and Screws 137
Table 47: Cabinet Models 141
Table 48: Rack Models....142
Table 49: Callout Legend 150
Table 50: Specifications of Wireline Board....150
Table 51: Wireline Board Jumper Settings....151
Table 52: Wireline Board Jumper Settings....151
Table 53: DC Remote Function Definition....155
Table 54: Callout Legend 158
Table 55: Callout Legend 159
Table 56: Callout Legend 159
Table 57: Callout Legend 160
Table 58: Callout Legend 161
Table 59: Callout Legend 161
Table 60: SLR 8000 Base Station/Repeater Preselector Filter Specifications (VHF)....162
Table 61: SLR 8000 Base Station/Repeater Preselector Filter Specifications (UHF) 162
Table 62: SLR 8000 Duplexer Specifications (VHF) 163
Table 63: SLR 8000 Duplexer Specifications (UHF)....163
Table 64: SLR 8000 Duplexer Specifications (800 MHz)....164
Table 65: SLR 8000 External Dual Circulator Specifications (VHF) 164
Table 66: SLR 8000 External Dual Circulator Specifications (UHF) 165
Table 67: SLR 8000 External Dual Circulator Specifications (800 MHz) 165
Table 68: SLR 8000 Antenna Relay Specifications 165
Table 69: Callout Legend 168
Table 70: Callout Legend 173
Table 71: Frequency Range (U01, U02, U03, U04, U05) 184
Table 72: EME Compliance Distances Based on Example UHF Evaluation 215

Related Publications

Related Publications	Part No.
MOTOTRBO SLR 8000 Quick Start Guide	MN002302A01

Summary of Bands Available

Table below lists the SLR 8000 Base Station/Repeater bands available in this manual. For details, see Model Chart section.

Frequency Band	Bandwidth	Power Level
VHF	136–174 MHz	1–100 W
UHF	400–470 MHz	1–100 W
800/900 MHz	RX: 806–825 MHz and 896–902 MHz	–
	TX: 851–870 MHz and 935–941 MHz	1–100 W

Limited Commercial Warranty

This limited commercial warranty describes the conditions under, and period during, which the repeater is repaired, replaced, and what is not covered.

I. What This Warranty Covers And For How Long

MOTOROLA SOLUTIONS INC. (“MOTOROLA”) warrants the MOTOROLA manufactured Communication Products listed below (“Product”) against defects in material and workmanship under normal use and service for a period of time from the date of purchase as scheduled below:

Repeater	Two (2) Years
Product Accessories	One (1) Year

Motorola, at its option, will at no charge either repair the Product (with new or reconditioned parts), replace it (with a new or reconditioned Product), or refund the purchase price of the Product during the warranty period provided it is returned in accordance with the terms of this warranty. Replaced parts or boards are warranted for the balance of the original applicable warranty period. All replaced parts of Product shall become the property of MOTOROLA.

This express limited warranty is extended by MOTOROLA to the original end user purchaser only and is not assignable or transferable to any other party. This is the complete warranty for the Product manufactured by MOTOROLA. MOTOROLA assumes no obligations or liability for additions or modifications to this warranty unless made in writing and signed by an officer of MOTOROLA. Unless made in a separate agreement between MOTOROLA and the original end user purchaser, MOTOROLA does not warrant the installation, maintenance or service of the Product.

MOTOROLA cannot be responsible in any way for any ancillary equipment not furnished by MOTOROLA which is attached to or used in connection with the Product, or for operation of the Product with any ancillary equipment, and all such equipment is expressly excluded from this warranty. Because each system which may use the Product is unique, MOTOROLA disclaims liability for range, coverage, or operation of the system as a whole under this warranty.

II. General Provisions

This warranty sets forth the full extent of MOTOROLA's responsibilities regarding the Product. Repair, replacement or refund of the purchase price, at MOTOROLA's option, is the exclusive remedy. THIS WARRANTY IS GIVEN IN LIEU OF ALL OTHER EXPRESS WARRANTIES. IMPLIED WARRANTIES, INCLUDING WITHOUT LIMITATION, IMPLIED WARRANTIES OF MERCHANTABILITY AND FITNESS FOR A PARTICULAR PURPOSE, ARE LIMITED TO THE DURATION OF THIS LIMITED WARRANTY. IN NO EVENT SHALL MOTOROLA BE LIABLE FOR DAMAGES IN EXCESS OF THE PURCHASE PRICE OF THE PRODUCT, FOR ANY LOSS OF USE, LOSS OF TIME, INCONVENIENCE, COMMERCIAL LOSS, LOST PROFITS OR SAVINGS OR OTHER INCIDENTAL, SPECIAL OR CONSEQUENTIAL DAMAGES ARISING OUT OF THE USE OR INABILITY TO USE SUCH PRODUCT, TO THE FULL EXTENT SUCH MAY BE DISCLAIMED BY LAW.

III. State Law Rights

SOME STATES DO NOT ALLOW THE EXCLUSION OR LIMITATION OF INCIDENTAL OR CONSEQUENTIAL DAMAGES OR LIMITATION ON HOW LONG AN IMPLIED WARRANTY LASTS, SO THE ABOVE LIMITATION OR EXCLUSIONS MAY NOT APPLY.

This warranty gives specific legal rights, and there may be other rights which may vary from state to state

IV. How To Get Warranty Service

You must provide proof of purchase (bearing the date of purchase and Product item serial number) in order to receive warranty service and, also, deliver or send the Product item, transportation and insurance prepaid, to an authorized warranty service location. Warranty service will be provided by Motorola through one of its authorized warranty service locations. If you first contact the company which sold you the Product, it can facilitate your obtaining warranty service. You can also .

V. What This Warranty Does Not Cover

Defects or damage resulting from use of the Product in other than its normal and customary manner.

Defects or damage from misuse, accident, water, or neglect.

Defects or damage from improper testing, operation, maintenance, installation, alteration, modification, or adjustment.

Breakage or damage to antennas unless caused directly by defects in material workmanship.

A Product subjected to unauthorized Product modifications, disassemblies or repairs (including, without limitation, the addition to the Product of non-Motorola supplied equipment) which adversely affect performance of the Product or interfere with Motorola's normal warranty inspection and testing of the Product to verify any warranty claim.

Product which has had the serial number removed or made illegible.

Freight costs to the repair depot.

A Product which, due to illegal or unauthorized alteration of the software/firmware in the Product, does not function in accordance with MOTOROLA’s published specifications or the FCC type acceptance labeling in effect for the Product at the time the Product was initially distributed from MOTOROLA.

Scratches or other cosmetic damage to Product surfaces that does not affect the operation of the Product.

Normal and customary wear and tear.

VI. Patent And Software Provisions

MOTOROLA will defend, at its own expense, any suit brought against the end user purchaser to the extent that it is based on a claim that the Product or parts infringe a United States patent, and MOTOROLA will pay those costs and damages finally awarded against the end user purchaser in any such suit which are attributable to any such claim, but such defense and payments are conditioned on the following:

that MOTOROLA will be notified promptly in writing by such purchaser of any notice of such claim;

that MOTOROLA will have sole control of the defense of such suit and all negotiations for its settlement or compromise; and

should the Product or parts become, or in MOTOROLA's opinion be likely to become, the subject of a claim of infringement of a United States patent, that such purchaser will permit MOTOROLA, at its option and expense, either to procure for such purchaser the right to continue using the Product or parts or to replace or modify the same so that it becomes noninfringing or to grant such purchaser a credit for the Product or parts as depreciated and accept its return. The depreciation will be an equal amount per year over the lifetime of the Product or parts as established by MOTOROLA.

MOTOROLA will have no liability with respect to any claim of patent infringement which is based upon the combination of the Product or parts furnished hereunder with software, apparatus or devices not furnished by MOTOROLA, nor will MOTOROLA have any liability for the use of ancillary equipment or software not furnished by MOTOROLA which is attached to or used in connection with the Product. The foregoing states the entire liability of MOTOROLA with respect to infringement of patents by the Product or any parts thereof.

Laws in the United States and other countries preserve for MOTOROLA certain exclusive rights for copyrighted MOTOROLA software such as the exclusive rights to reproduce in copies and distribute copies of such Motorola software. MOTOROLA software may be used in only the Product in which the software was originally embodied and such software in such Product may not be replaced, copied,

distributed, modified in any way, or used to produce any derivative thereof. No other use including, without limitation, alteration, modification, reproduction, distribution, or reverse engineering of such MOTOROLA software or exercise of rights in such MOTOROLA software is permitted. No license is granted by implication, estoppel or otherwise under MOTOROLA patent rights or copyrights.

VII. Governing Law

This Warranty is governed by the laws of the State of Illinois, USA.

Chapter 1

SLR 8000 Base Station/Repeater

1.1
Notations Used in This Manual

Throughout the text in this publication, three types of notations are used to emphasize that safety hazards exist, and due care must be taken and observed.

NOTICE: An operational procedure, practice, or condition which is essential to emphasize.

CAUTION: CAUTION indicates a potentially hazardous situation which, if not avoided, **might** result in equipment damage.

WARNING: WARNING indicates a potentially hazardous situation which, if not avoided, **could** result in death or injury.

Symbol indicates areas of the product that pose potential burn hazards.

1.2
Description

The Motorola Solutions SLR 8000 Base Station/Repeater provides a modular, flexible analog and digital station designed for today's communication systems and for the future. The station is available for use in these configurations:

- Analog Conventional
- Analog Voting
- Digital (MOTOTRBO)
  - MOTOTRBO DMR Tier 2 Conventional – Single-Site
  - MOTOTRBO DMR Tier 2 Conventional – IP Site Connect
  - MOTOTRBO Capacity Plus Single-Site Trunking
  - MOTOTRBO Capacity Plus Multi-Site Trunking
  - MOTOTRBO Connect Plus Trunking
  - MOTOTRBO Capacity Max Trunking
  - MOTOTRBO Digital Voting
  - MOTOTRBO Dynamic Mixed Mode (DMM)
- LTR Trunking
- Passport Trunking
- MPT1327 Trunking

NOTICE: Certain software features enabled via the CPS can be configured with the Online Help or with a regional representative. Refer to the regional Ordering Guide to determine the features available within the respective regions.

The SLR 8000 can either be configured as a stand-alone base station/repeater or as a base station/repeater connected to a back-end network, as in the case of operating in IP Site Connect mode. As a

base station/repeater, it listens on one uplink frequency, and then re-transmits on a downlink frequency, thus providing the RF interface to the field subscribers. When configured for analog station operation, the repeater or base station is designed to operate with most existing analog systems, which enables a smooth migration to the MOTOTRBO system.

When configured for digital operation, the base station/repeater offers additional services. The digital base station/repeater operates in TDMA mode, which essentially divides one channel into two virtual channels using time slots; therefore the user capacity is doubled. The base station/repeater utilizes embedded signaling to inform the field radios of the busy/idle status of each channel (time slot), the type of traffic, and even the source and destination information.

The SLR 8000 facilitates the field replaceable unit (FRU) concept of field repair to maximize system uptime. The FRU concept also aids in allowing the end user/maintainer to lower their inventory costs. The base model SLR 8000 FRUs are as follows:

- Modem FRU
- Power Amplifier FRU
- Power Supply FRU
- Front Panel FRU

See Figure 1: Front view of the SLR 8000 Base Station/Repeater on page 32 for the front view and Figure 2: Rear view of the SLR 8000 Base Station/Repeater (with no options installed) on page 32 for the rear view of SLR 8000 Base Station/Repeater. Figure 3: Front view (without top cover) of the SLR 8000 Base Station/Repeater (with no options installed) on page 33 shows the front view portion of the base station/repeater without the top cover and Figure 4: Front view (without top and bottom covers) of the SLR 8000 Base Station/Repeater on page 33 shows the front view portion of the base station/repeater without the top cover, bottom cover, and front panel.

Figure 1: Front view of the SLR 8000 Base Station/Repeater

Label	Description
1	Speaker Volume Buttons
2	Microphone Port
3	Front Panel LED Indicators
4	USB Port

Figure 2: Rear view of the SLR 8000 Base Station/Repeater (with no options installed)

Label	Description
1	Back Panel Interface Connectos and Power Switch

Figure 3: Front view (without top cover) of the SLR 8000 Base Station/Repeater (with no options installed)

Label	Description
1	Power Amplifier Module
2	Modem Module
3	Power Supply Module

Figure 4: Front view (without top and bottom covers) of the SLR 8000 Base Station/Repeater

Label	Description
1	with Fan Grill Removed

1.3

Operating Features

The following are the standard features of an SLR 8000 model:

- MOTOTRBO Conventional Operation (2-Slot TDMA, 4FSK Modulation)
- Analog Conventional Operation (FM)
- Continuous Duty Cycle Operation over -30 °C to +60 °C
- Meets or exceeds the following standards:
  - TIA603E
  - ETSI EN 300 086

- ETSI EN 300 113
- ETSI TS 102 361-1 Part 1: DMR Air Interface Protocol
- ETSI TS 102 361-2 Part 2: DMR Voice and Generic Services and Facilities
- ETSI TS 102 361-3 Part 3: DMR Packet Data Protocol
- ETSI TS 102 361-4 Part 4: DMR Trunking Protocol
- California Energy Commission (CEC) - Compliant to Title 20 Appliance Efficiency Regulations when operated in Battery Charger Only mode with Sprinter Battery S12V370. Charge time may take up to 25 hr.

- AMBE +2™ Digital VOCODER
- Synthesized Frequency Generation
- Female N-type Antenna Connector (Tx)
- Female BNC Antenna Connector (Rx)
- Ethernet Port (Network)
- Front-mounted USB Port (Service)
- 12 configurable GPIO ports (Digital)
- 4 configurable GPI ports (Analog) [1]
- 2 configurable GPO ports (Analog) [1]
- Power for third-party controllers (1 A)
- 1.5 PPM Frequency Stability (Temperature and 1-Year Aging) (VHF and UHF)
- 0.1 PPM Frequency Stability (Temperature and 1-Year Aging) (800/900 MHz)
- External Reference Capability
- Switching Power Supply operates from 100–240 VAC (47–63 Hz)
- Multi-Power Source configurable (AC, DC, or AC with Battery Revert)
- Integrated 5 A battery charger
- Station Diagnostic Tests – Fixed Set of Tests run upon startup
- Physical Dimensions: 3.5 in. H x 19 in. W x 17 in. D (89 x 483 x 438 mm) 2RU
- Weight: 31 lb (14.06 kg) excluding cabinet or other peripheral equipment

Motorola Solutions Network Interface:

- IP Site Connect
- Repeater Diagnostics and Control (RDAC)
- Linked Capacity Plus
- Connect Plus
- Capacity Max

Third-Party Controller Interface:

- Phone Patch
- Multi-Coded Squelch Interface (Repeater Panel)
- Tone Remote Adapter
- LTR Trunking

[1] Not supported.

- Passport Trunking
- MPT1327 Trunking

NOTICE: The SLR 8000 Base Station/Repeater only supports the third-party controllers noted above when it is configured in analog mode. The exception is phone patch in digital mode.

Optionally, the SLR 8000 Base Station/Repeater may be configured with:

- Internal Pre-selector
- Internal Antenna Relay
- External Duplexer
- External Dual Circulator Tray
- Integrated Tone Remote Control (with Wireline option)
- Integrated DC Remote Control (with Wireline option)
- Integrated E&M Remote Control (with Wireline option)
- Analog Voting (with Wireline option)
- Simplex operation (Tx=Rx)
- Wireline Capability

In addition, the following features are also included. These features are shipped in a preset condition, but may be altered through the use of the CPS.

- 64 Tx/Rx Frequencies – Factory Programmed with 1 Tx, 1 Rx
- 12.5 kHz, 20 kHz (VHF), and 25 kHz Channel Bandwidth – Factory Programmed to 12.5 kHz
- 1 Tx and 1 Rx (PL or DPL) Squelch Code per channel – Factory Programmed to CSQ
- Base Station Identification (BSI) – Factory Programmed as "BLANK" ("BLANK" disables BSI)
- Push-To-Talk (PTT) Priority – Factory Programmed to Repeat Path

1.4 Frequency Ranges and Power Levels

The SLR 8000 Base Station/Repeater is available in the following frequency ranges and power levels table.

Table 1: SLR 8000 Frequency Ranges and Power Levels

Frequency Band	Bandwidth	Power Level
VHF	136–174 MHz	1–100 W
UHF	400–470 MHz	1–100 W
800/900 MHz	RX: 806–825 MHz and 896–902 MHz	–
	TX: 851–870 MHz and 935–941 MHz	1–100 W

1.5

Specifications

Specifications of the SLR 8000 Base Station/Repeater are available in the following tables.

Table 2: SLR 8000 Base Station/Repeater General Specifications (All Bands)

Parameter	Specifications
Number of Channels	64
Frequency Generation	Synthesized
Input Voltage AC	100–240 VAC (47–63 Hz)
Input Voltage DC	11–15.5 VDC or 21.6–32 VDC
Power Supply Type	Switching
Station Weight	31 lbs (14.06 kg)
Temperature Range	-30 °C to +60 °C (-22 °F to +140 °F)
Humidity Range	RH of 95%, non-condensing at 50 °C (122 °F)
Antenna Connectors	Tx: N-Type, Rx: BNC
Modes of Operation	Half-Duplex/Duplex/Simplex
Rack Unit	2
Height	3.5 in. (89 mm)
Width	19 in. (483 mm)
Depth	17.25 in. (438 mm)

Table 3: SLR 8000 Base Station/Repeater Specifications

Parameter	Specifications		
	VHF	UHF	800/900 MHz
Input Power (All Modulations)			
Standby (AC Line 110 V/240 V)	0.25 A/0.3 A		0.27 A/0.31 A
100 W Transmit at Rated Power (AC Line 110 V/240 V)	2.1 A/1.1 A	2.0 A/1.1 A	2.8 A/1.3 A
50 W Transmit at Rated Power (AC Line 110 V/240 V)	1.45 A/0.8 A	1.25 A/0.7 A	1.6 A/0.8 A
Standby (13.6 VDC)/(24 VDC)	0.9 A/0.5 A		0.99 A/0.6 A
100 W Transmit at Rated Power (24 VDC)	8.6 A	8.2 A	12 A
50 W Transmit at Rated Power (13.6 VDC)	12.5 A	11.2 A	14 A
Frequency Reference			
Internal Frequency Stability (PPM)	±0.5 PPM (temperature)		±0.1 PPM (temperature)
External Reference Capable	Yes		

2 Typical performance under the following conditions (when applicable): Battery charging disabled and nominal VSWR conditions (VSWR <1.5:1), and no installed hardware options.

Parameter	Specifications		
	VHF	UHF	800/900 MHz
Frequency Bands			
Electronic Bandwidth	136–174 MHz	400–470 MHz	800 (RX: 806–825 MHz and TX: 851–870 MHz) 900 (RX: 896–902 MHz and TX: 935–941 MHz)
Receiver			
Selectivity 25 kHz/12.5 kHz (TIA603E)	83 dB/52 dB	78 dB/52 dB	
Selectivity 25 kHz/12.5 kHz (TIA603)	83 dB/75 dB	80 dB/75 dB	
Selectivity 25 kHz/12.5 kHz (ETSI)	70 dB/63 dB		
Sensitivity (12 dB SINAD)	0.3 uV		0.28 uV
Sensitivity (12 dB SINAD) with Antenna Relay and/or Preselector	0.35 uV		
Sensitivity (5% BER)	0.25 uV		0.28 uV
Sensitivity (5% BER) with Optional Preselector	0.29 uV		0.35 uV
Intermodulation Rejection (TIA603E)	85 dB		
Intermodulation Rejection (ETSI)	73 dB		
Spurious Rejection (TIA603E)	85 dB		90 dB
Spurious Rejection (TIA603E) with Optional Preselector	90 dB		NA
Spurious Rejection (ETSI)	75 dB		
Conducted Spurious Emissions	-57 dBm		
Audio Distortion	<3%		
Audio Response	Per TIA/ETSI		
FM Hum and Noise 25 kHz/12.5 kHz	-50 dB/-45 dB		
Transmitter			
Rated Output Power (Continuous Duty) 12 VDC/24 VDC	1–50 W/1–100 W		
Intermodulation Attenuation	55 dB		
Adjacent Channel Power 25 kHz/12.5 kHz	75 dB/60 dB		
Modulation Fidelity (4FSK)	FSK Error 5%, FSK Magnitude 1%		
Wideband Noise (1 MHz) @ Rated Pout	-152 dBc/Hz		
Rated System Deviation	±2.5 kHz @ 12.5 kHz, ±5.0 kHz @ 25 kHz		
Spurious Harmonics and Emissions	-40 dBm < 1 GHz, -30 dBm > 1 GHz		
Audio Distortion	< 3%		
Audio Response	Per TIA/ETSI		

Parameter	Specifications		
	VHF	UHF	800/900 MHz
FM Hum and Noise 25 kHz/12.5 kHz	-50 dB/-45 dB		
FCC Identifier	ABZ99FT3095	ABZ99FT4098	ABZ99FT5101
FCC Emission Designators	11K0F3E, 16K0F3E, 7K60FXD, 7K60F7D, 7K60FXE, 7K60F7E, and 7K60F7W		11K0F3E, 16K0F3E, 7K60FXD, 7K60F7D, 7K60FXE, 7K60F7E, 7K60F7W, 21K7D7E, 21K7D7D, and 21K7D7W
Industry Canada • IC certification/registration number • IC model number • Tx/Rx Frequency range	• 109AB-99FT3095 • SLR 8000-VHF • Tx: 138–174 MHz • Rx: 138–174 MHz	• 109AB-99FT4098 • SLR 8000-UHF 1 • Tx: 406.1–430 MHz and 450–470 MHz • Rx: 406.1–430 MHz and 450–470 MHz	• 109AB-99FT5101 • SLR 8000-800900 • Tx: 851–870 MHz and 935–941 MHz • Rx: 806–825 MHz and 896–902 MHz

All specifications noted above are in accordance to their respective TIA603E, ETSI EN 300 086, and ETSI EN 300 113 standards unless otherwise noted.

1.6 Theory of Operation

The SLR 8000 Base Station/Repeater provides the radio frequency (RF) link between the base station/repeater and the subscriber radios.

The base station/repeater acquires inbound signals via its external receive (Rx) antenna and then amplifies, filters and demodulates the signals into data or voice packets. From that point, the data is either forwarded to the base station/repeater's transmitter to subscriber radios, and/or the data is delivered via a wired interface for distribution to networked base station/repeaters, consoles, or other networked infrastructure.

The SLR 8000 Base Station/Repeater consists of a Modem, Power Amplifier (PA), Front Panel and Power Supply (PS). These modules are also known as Field Replaceable Units (FRU).

The Modem module is comprised of three subsystems, which are the Receiver subsystem, Exciter subsystem, and Station Control subsystem. At a high level, these subsystems are further explained below:

- The Receiver subsystem is a dual heterodyne Receiver which receives the RF signal from the subscriber's transmitter. It then converts the resulting final intermediate frequency (IF) from an analog signal to that of a digital word in IQ signal format. Finally, the Receiver delivers the IQ signal, via the SSI bus, to the Station Control subsystem for demodulation. Additionally, the Receiver subsystem also provides for its own metering and diagnostics via software, as well as self-contained calibration (no field tuning is needed for the Receiver subsystem).

- The Exciter subsystem converts a two-port base band data signal, sent over the SSI bus from the Station Control subsystem, to an analog signal representation. The analog signal is then modulated with a low-power RF transmitter carrier that is generated by the Exciter subsystem. The power modulated RF carrier is then amplified and delivered to the PA at an intermediate level of approximately +40 dBm for further amplification. The Exciter subsystem and PA constitute the transmitter of the SLR 8000 Base Station/Repeater. Additionally, the Exciter subsystem also provides its own metering and diagnostics via software, as well as a self-contained calibration (no field tuning is needed for the Exciter subsystem).
- The heart of the Station Control subsystem is the Texas Instruments DM8148 Host/DSP processor. In general, the SCM controls the entire coordination of the base station/repeater functions. Specifically, the Station Control subsystem provides for the following functionalities:
  - Contains and runs the preloaded base station/repeater software.
  - Manages inbound and outbound RF and Audio traffic.
  - Provides an on-board USB port for local configuring, alignment, and diagnostics via the following applications:
    + Customer Programming Software (CPS).
    + Tuner application.
    + Base station/repeater Diagnostic and Control (RDAC) software.
  - Provides an Ethernet port for IP site connectivity and remote RDAC.
  - Provides GPIO connectivity for third party controller interfaces.
  - Provides for analog base station/repeater audio connectivity.
  - Data and Control to the Receiver subsystem via the SPI and SSI respectively.
  - Data and Control to the Exciter subsystem via the SPI and SSI respectively.
  - Control of the PA's set power via the SPI.
  - Configuration and fault management of all subsystems including the PS and PA.
  - Generates the internal station reference.
  - Provides control of the front panel module's indicator LEDs.
- The PA module amplifies the intermediate level modulated RF signal from the Modem. It then delivers the amplified signal to the transmitter antenna port at a power level within the rated power band of the base station/repeater, for transmission to the subscriber radios. In addition to its primary task of amplification, the PA provides the following hardware functions for the base station/repeater.
  - Harmonic attenuation.
  - Inter-modulation attenuation (IMA) suppression.
  - VSWR detection.
  - RF power control (primary means).
  - Meters for diagnostics.
  - Power rollback for temperature, VSWR, and voltage.
  - Self-Contained calibration (no field alignment is needed for PA).
- The Front Panel module provides LED indications for general assessment of the status and operational condition of the base station/repeater. Additionally, the front panel also provides a USB service port for configuration and alignment of the base station/repeater.
- The PS Module provides DC power to the Modem, PA and Front Panel. It can also be used to provide auxiliary power (nominal 15.75 VDC) to a number of third-party controllers. Additionally, it can operate in three different input modes:

- AC Input Only.
- DC Input Only.
- AC with Battery Revert.

- In addition to providing power to the noted FRU and controllers, the PS also provides the following:
  - AC Failure-detect signaling to the Modem.
  - Output over-current protection.
  - Integrated 2 stage 5 A battery charger.
- Specifically, the Wireline board provides for the following:
  - Tone Remote Control.
  - DC Remote Control.
  - E&M Remote Control.
  - 4-wire balanced audio connection.
  - 2-wire balanced audio connection.
  - Analog Voting.
  - Tn-nR Functionality.
- Further details can be found in the individual sections of the respective FRU chapters of this manual.

1.7

Basic Base Station/Repeater Level Troubleshooting – RDAC and LEDs

Diagnostic tests are available for the Modem, PA, and Power Supply Modules. If a problem occurs during station operation, it is logged as an alarm that is read with the Base Station/Repeater Diagnostic and Control application (RDAC).

Figure 5: RDAC Diagnostic Screen

The station operator will then evaluate the problem locally or remotely, as the station maintains an Alarm Log with the name of the alarm that has failed since the last power-up. By using the RDAC application's Alarm Log, the alarm messages will aid in identifying the FRU that failed along with the fault condition.

After booting up the base station/repeater, the seven LEDs (Power/Status, Tx Slot 1, Tx Slot 2, Rx Slot 1, Rx Slot 2, Network, and Reference LEDs) will flash in unison.

The general status and condition of the SLR 8000 Base Station/Repeater can be obtained by observing the seven LED indicators on the front panel. See the following tables for LED symbols, their meaning, and the information conveyed by the LED indicators.

Table 4: Front Panel LED Indicators

LED	Definition
	Status
Tx A	Tx Slot 1
Rx A	Rx Slot 1
Tx B	Tx Slot 2
Rx B	Rx Slot 2
	Ethernet Link/Network Connectivity
	Reference

Table 5: SLR 8000 Front Panel LED Definitions

LED Function Name	LED Color	LED State	Status Indication
Power/Status	Off	Off	Off
	Green	Flashing	Operating Normally, with DC power
		Solid	Operating Normally, with AC power
	Red	Flashing	Base Station/Repeater is Disabled (by customer)
		Solid	Not Operational – Major Alarm
	Amber	Flashing	Check Alarm Log – Alarm occurred and cleared but remains latched (configurable) [3]
		Solid	Base Station/Repeater Operational – Minor Alarm
Tx A	Off	Off	Transmitter is not transmitting
	Green	Solid	Tx slot A or Analog (at desired power)
	Amber	Solid	Tx slot A or Analog (at less than desired power)
	Red	Solid	Tx Fail
		Flashing	Tx Inhibit [3]
Rx A	Off	Off	No receive carrier detected
	Green	Solid	Rx Slot A or Analog (qualifier met)
	Amber	Solid	Rx Slot A or Analog (non-qualified)

[3] Not supported.

LED Function Name	LED Color	LED State	Status Indication
Tx B	Off	Off	Transmitter is not transmitting
	Green	Solid	Tx slot B or Analog (at desired power)
	Amber	Solid	Tx slot B or Analog (at less than desired power)
	Red	Solid	Tx Fail
		Flashing	Tx Inhibit [3]
Rx B	Off	Off	No receive carrier detected
	Green	Solid	Rx Slot B or Analog (qualifier met)
	Amber	Solid	Rx Slot B or Analog (non-qualified)
Ethernet/Network Connectivity	Off	Off	No Ethernet connection
	Green	Solid	Connectivity/Linked
		Flashing	Attempting to connect to the system
Reference	Off	Off	No External Reference is present
	Green	Solid	Locked to External Reference (1 pps [3], 5 MHz, 10 MHz)

NOTICE:
- All LEDs flashing in unison indicate the base station/repeater is booting up.
- The RDAC application will be needed when the Status LED is red (solid or flashing). This status indicates a minor or major alarm. The RDAC application is used to identify the specific alarm and probable diagnosis to aid in identifying the FRU at fault.

1.8 Model Chart

This section describes the VHF, UHF1 and 800/900 MHz High Power.

1.8.1 VHF High Power Model Chart

SLR 8000, VHF, 136–174 MHz		
Model/Item		**Description**
T8319A		**SLR 8000 Base Station/Repeater, 1–100 W**
X	3082933N08	Power Cord, US
X	MN002302A01	Quick Start Guide
x = Indicates compatibility with model(s)		

Option		Description
X	CA02965AA	Add: VHF (136–174 MHz)

1.8.2
UHF1 High Power Model Chart

SLR 8000, UHF, 400–470 MHz		
Model/Item		**Description**
T8319A		**SLR 8000 Base Station/Repeater, 1–100 W**
X	3082933N08	Power Cord, US
X	MN002302A01	Quick Start Guide
x = Indicates compatibility with model(s)		

Option		Description
X	CA02962AA	Add: UHF1 (400–470 MHz)

1.8.3
800/900 MHz High Power Model Chart

SLR 8000, 800/900, Rx: 806–825 MHz, 896–902 MHz; Tx: 851–870 MHz, 935–941 MHz		
Model/Item		**Description**
T8319A		**SLR 8000 Base Station/Repeater, 1–100 W**
X	3082933N08	Power Cord, US
X	MN002302A01	Quick Start Guide
X	CA03385AA	Add: 800 MHz
X	CA03414AA	Add: 900 MHz
x = Indicates compatibility with model(s)		

Chapter 2

SLR 8000 Satellite Receiver

2.1
Satellite Receiver Description

The main purpose of the Satellite Receiver is to eliminate "dead zones" in a communications system by improving the "talk-in" coverage on a particular receive frequency when used in a receiver voting system.

The Motorola Solutions SLR 8000 Base Station/Repeater is not offered as an exclusive Satellite Receiver only model, rather the base station/repeater can be configured through the CPS to operate as a Satellite Receiver in a receive only mode of operation. As such, the context of this chapter assumes that the base station/repeater is configured as a Satellite Receiver.

2.2
Operating Features

The operating features of the Satellite Receiver are identical to the SLR 8000 Base Station/Repeater, with the exception that all transmitter related functions are not applicable.

See Operating Features on page 33 for more details.

2.3
Frequency Ranges

The supported frequency ranges of the Satellite Receiver are identical to the SLR 8000 Base Station/Repeater's receive frequency ranges.

See Frequency Ranges and Power Levels on page 35 for more details.

2.4
Specifications

The specifications of the Satellite Receiver are identical to the SLR 8000 Base Station/Repeater, with the exception that all transmitter related specifications are not applicable. See Specifications on page 36 for more details.

2.5
Configuration

Other than setting the general personality configurations, one must additionally set the "Operation Mode" parameter under the "General Settings" menu in the CPS to that of "Digital Satellite Receiver or "Analog Satellite Receiver".

See the following screenshot of the "Operation Mode" parameter.

Figure 6: "Operation Mode" configuration for Satellite Receiver Functionality

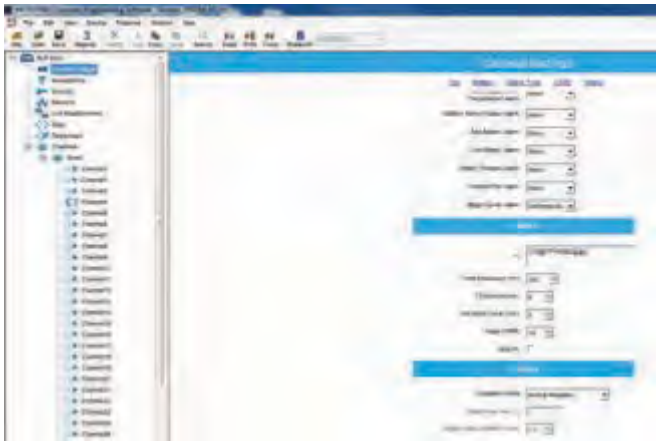

2.6

Basic Station Level Troubleshooting – RDAC and LEDs

The troubleshooting procedures of the Satellite Receiver are similar to the SLR 8000 Base Station/ Repeater with regards to the control, power supply, and receiver sub-systems.

See Basic Base Station/Repeater Level Troubleshooting – RDAC and LEDs on page 40 for more details.

NOTICE: When configured for receiver only operation, the SLR 8000 Base Station/Repeater does not support any transmitter sub-system functions. As such, disregard all references to the transmitter section in Basic Base Station/Repeater Level Troubleshooting – RDAC and LEDs on page 40. This includes any transmitter related topics in the RDAC and the front panel LEDs.

2.7

Satellite Receiver System (Analog)

The SLR 8000 Satellite Receiver connects to either a Spectra-TAC™ comparator, DigiTAC™ comparator or a Voter Gateway Unit (VGU).

The following figure shows a typical voting system and the connections of the SLR 8000 Satellite Receivers.

Figure 7: Satellite Receiver Connections Within a Voting System

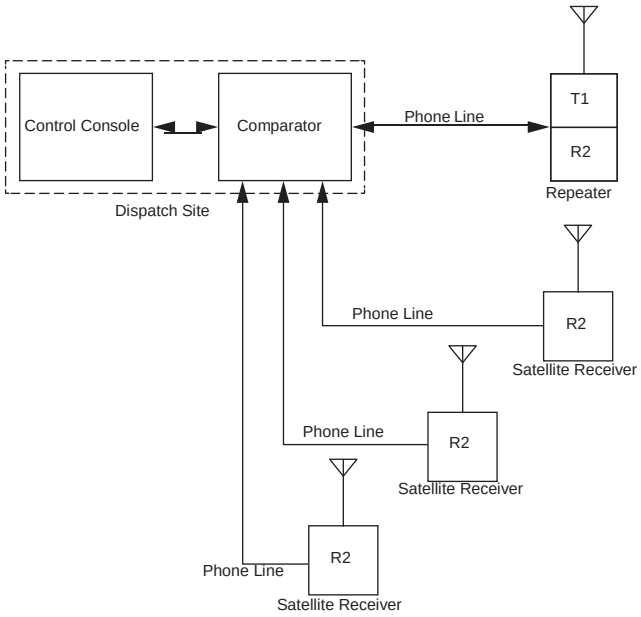

Chapter 3

SLR 8000 Modem

3.1 Description

The Modem Module is described in this section. A general description, identification of inputs and outputs, and functional theory of operation are provided. The information provided is sufficient to give

service personnel a functional understanding of the module, allowing maintenance and troubleshooting to the module level.

3.1.1
General Description

The Modem Module consists of a single printed circuit board in a clamshell housing assembly. It provides the receiver, exciter and station control functionality for the base station/repeater. Additionally, most external connections to the station are connected directly to the modem module.

3.1.2
Input and Output Connections

The following figure shows the Modem Module input and output external connections.

Figure 8: Modem Module Connector Locations

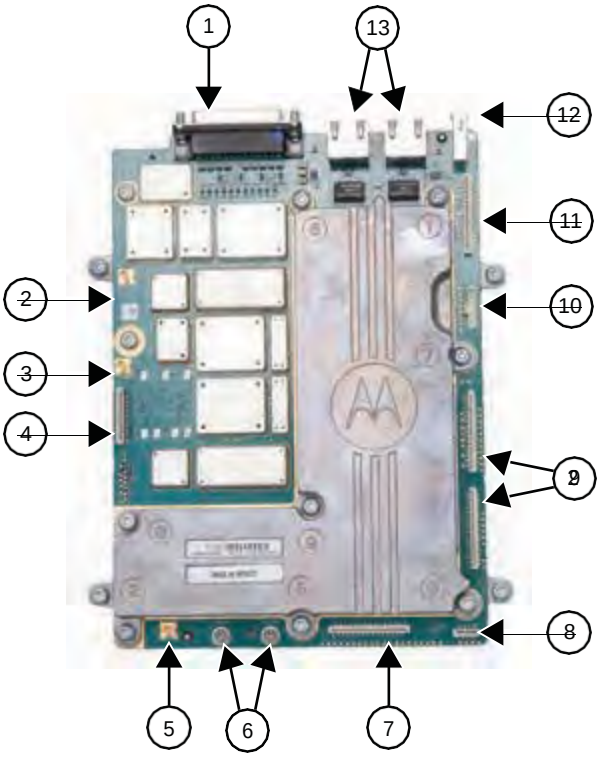

Table 6: Callout Legend

Label	Description
1	Auxiliary Connector
2	Receiver Input
3	External Reference Input
4	PA Digital Interface
5	Tx Exciter Output
6	DC Power Input
7	Front Panel Interface

Label	Description
8	Chassis ID Connector
9	Wireline/Aux Board Interface
10	PSU Digital Interface
11	Future Expansion Port
12	USB Host
13	Ethernet Connectors

3.1.3
Frequency Bands

The Modem Module covers the following bands with unique models:

- 136–174 MHz
- 400–470 MHz
- Rx : 806–825 MHz, 896–902 MHz
  Tx : 851–870 MHz, 935–941 MHz

3.2
Receiver Subsystem

The Modem Module includes the receiver circuitry for the station. A cable connects the board connector to a BNC connector located on the rear panel of the base station/repeater.

See Figure 8: Modem Module Connector Locations on page 48 for the location of this connector. The receiver section performs highly-selective bandpass filtering and dual down-conversion of the desired RF signal. A custom Receiver IC then performs an analog-to-digital conversion of the desired received signal and outputs the digitized signal to the controller section via a serial synchronous interface. Included in the receiver section are:

- Frequency Synthesizer Circuitry – Consists of a phase-locked loop and Voltage-Controlled Oscillator (VCO), generates the first LO injection signal.
- Varactor-tuned Preselector Filter(s) – Provides bandpass filtering of the station Receiver RF input.
- Receiver Front End Circuitry – Performs filtering, amplification, and the first down conversion of the Receiver RF signal.
- Receiver-specific piece of transceiver IC Circuitry – Consists of receiver-specific parts of a transceiver IC which performs the second down conversion, filtering, amplification, and analog-to-digital conversion of the receive signal.
- Analog to Digital Converter (ADC) Circuitry – Converts analog Receiver status signals to digital format for transfer to the controller circuitry located on the Modem Module.

3.2.1
Receiver Subsystem Specifications

Table 7: Specifications of Receiver Subsystem

Parameter	Specifications		
	VHF	UHF	800/900 MHz
Frequency Bands	136–174 MHz	400–470 MHz	806–825 MHz & 896–902 MHz
Selectivity 25 kHz/12.5 kHz (TIA603E)	83 dB/52 dB	78 dB/52 dB	80 dB/55 dB
Selectivity 25 kHz/12.5 kHz (TIA603)	83 dB/75 dB	80 dB/75 dB	
Selectivity 25 kHz/12.5 kHz (ETSI)	70 dB/63 dB		
Sensitivity (12 dB SINAD)	0.3 uV		0.28 uV
Sensitivity (5% BER)	0.25 uV		0.28 uV
Intermodulation Rejection (TIA603E)	85 dB		
Intermodulation Rejection (ETSI)	73 dB		
Spurious Rejection (TIA603E)	85 dB		90 dB
Spurious Rejection (ETSI)	75 dB		
Audio Distortion	<3%		
FM Hum and Noise 25 kHz/12.5 kHz	-50 dB/-45 dB		

3.3
Transmitter Exciter Subsystem

This section describes the transmitter exciter subsystem as well as provides the specifications for the subsystem.

The Exciter Subsystem in the Modem Module (in conjunction with the Power Amplifier Module) provides the transmitter functions for the station. The Exciter circuitry generates a low-level modulated Radio Frequency (RF) signal which is input to the Power Amplifier (PA) module for further amplification and output to the transmit antenna. A coaxial cable is used to connect the Tx exciter output to the PA module. See Figure 8: Modem Module Connector Locations on page 48 for the exact location of this connector. The Exciter Module interfaces directly with the controller section, which provides control signals and monitoring, and routes transmit data to the Exciter.

The RF carrier is generated by a frequency synthesizer consisting of synthesizer circuitry and Voltage-Controlled Oscillator (VCO) circuitry. Exciter circuit control signals, monitoring, and audio processing are handled by the controller section of the Modem Module. The power leveling circuitry of the transmitter system is located in the Power Amplifier Module and passed onto the exciter stages through the PA-Modem interface flex cable. See Figure 8: Modem Module Connector Locations on page 48 for the location. Included in the exciter section are:

- Frequency Synthesizer Circuitry – Consists of a phase-locked loop and Voltage-Controlled Oscillator (VCO), generates a modulated RF signal at the transmitter carrier frequency.
- RF Isolation Switch – Allows the controller section to turn on/off the Exciter RF input signal which greatly reduces the signal supplied to the Power Amplifier module.
- Analog to Digital Converter (ADC) Circuitry – Converts the analog Exciter status signals to the digital format for transfer, upon request, to the controller section of the Modem Module.

- Low-Level Amplifiers – Amplify and buffer the modulated RF signal from the VCO for delivery to the Power Amplifier Module.

3.3.1
Transmitter Exciter Subsystem Specifications

Table 8: Specifications of Transmitter Exciter Subsystem

Parameter	Specifications		
	VHF	UHF	800/900 MHz
Frequency Range	136–174 MHz	400–470 MHz	851–870 MHz & 935–941 MHz
Electronic Bandwidth	Full Bandwidth		
Output Power (maximum)	12 W		
Harmonics	-20 dBc		

3.4
Station Control Subsystem

The Controller circuitry performs the digital signal processing, data formatting and audio routing for the station and provides the external interfaces to the rest of the site.

The Controller section consists of 7 main ICs. These are:

- Texas Instrument DM8148 Host/DSP Processor
- EMMC Flash memory
- DDR3 memory
- Texas Instruments Power Management IC
- NOR Flash
- 2-TI AIC3204 Codecs

General controller functionality includes:

- Data and Control interface to the transceiver ICs
- Audio interface with CODEC ICs
- UART interface to expansion board
- Intermodule communication (SPI, I2C)
- Two Ethernet ports
- USB Device port
- USB Host port
- External physical interfaces (connectors, LEDs, external references etc.)
- Station Reference Control

3.4.1
High Stability Reference Block

The high-stability reference block can be used to enhance the 0.5 ppm Voltage Controlled Temperature Compensated Crystal Oscillator.

A 10 MHz 0.1 ppm VCOCXO is standard on 800/900 models in order to provide the higher frequency stability required at 900 MHz. The block diagram is shown in Figure 9: High Stability Reference Circuit on page 52. An external reference can be applied to lock the on board VCTCXO. This function can be enabled via the customer programming software. The connection is made via a cable connecting a BNC connector on the rear panel to a connector on the modem module. The location of the connector on the modem module can be found in Figure 8: Modem Module Connector Locations on page 48.

Figure 9: High Stability Reference Circuit

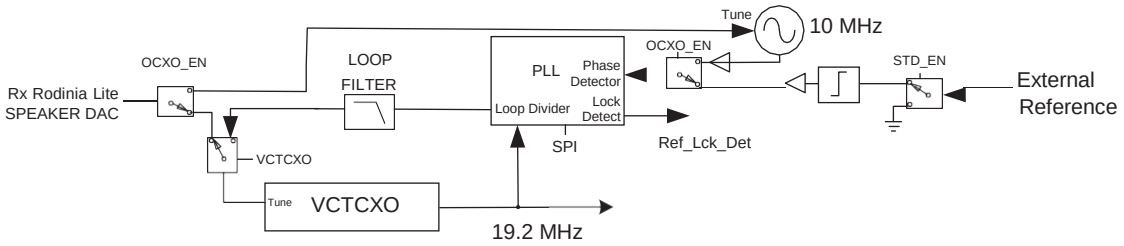

3.4.2
Audio

The analog audio stages are used exclusively for external accessories connected through the rear DB25 accessory connector.

The critical components of the audio circuit are the TI DM8148 processor and a pair of Texas Instruments AIC3204 dual channel audio codecs. The following figure details the specific interconnects between the critical components.

Figure 10: Audio Block Diagram

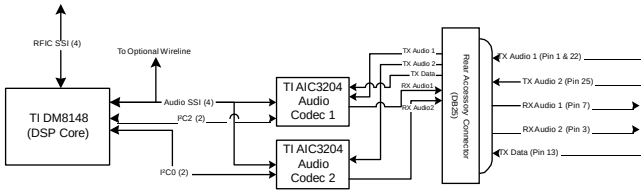

The base station/repeater digital audio is handled primarily by the DM8148 processor. The TX RFIC generates a 24.576 MHz master clock (MCLK) that the DM8148 uses to drive its McASP SSI interface for the audio codecs. The bulk of the audio processing is done in the DaVinci's DSP core. The audio codecs contain DACs and ADCs and handle the conversion of the digital audio to analog audio and vice versa.

There are 2 TX audio lines routed in from the rear accessory connector. These are TX Audio 1 (Pins 1 and 22, used for analog and slot 1 digital), and TX Data (Pin 13).

For the RX outputs, there is only 1 which is connected to the accessory connector. RX Audio 1 on pin 7 (to be used for analog and slot 1 digital).

3.5
Station Control Front Panel Interface Connector

Refer Modem Interface for details.

3.6

Station Control Rear Panel Connections

Refer USB on page 71 to Auxiliary (Aux) for details.

3.7

Station Control Power Amplifier Interface Connector

The digital interface to the power amplifier module utilizes a 20-pin vertical LIF connector.

See Figure 8: Modem Module Connector Locations on page 48 for the locations of these connectors. The following figure shows the pin number locations.

Figure 11: Power Amplifier Interface Connector Pin Locations

3.8

Station Control Power Supply Interface Connector

The power supply digital interface utilizes a 15-pin Pico-Clasp™ connector.

The location is detailed in Figure 8: Modem Module Connector Locations on page 48. The following figure shows the pin number locations.

Figure 12: Power Supply Interface Connector Pin Locations

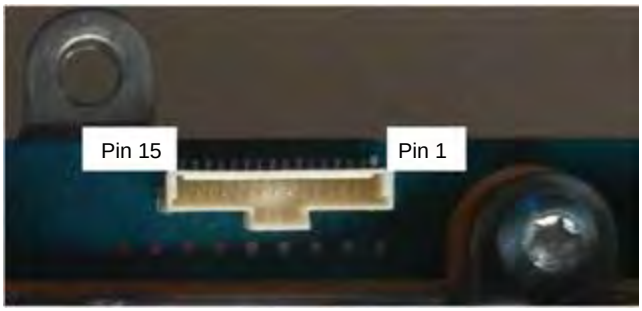

3.9

Station Control Expansion Board Interface Connector

The expansion board interface utilizes a 30-pin vertical LIF connector.

The location is detailed in Figure 8: Modem Module Connector Locations on page 48. The following figure shows the pin number locations.

Figure 13: Expansion Board Interface Connector Pin Locations

3.10

Station Control Chassis ID Interface Connector

The Chassis ID utilizes an 8-pin vertical LIF connector.

The location is detailed in Figure 8: Modem Module Connector Locations on page 48.
The following figure shows the pin number locations. The base station/repeater chassis information is necessary for warranty and purchased software features so this must be connected.

Figure 14: Chassis ID Interface Connector Pin Locations

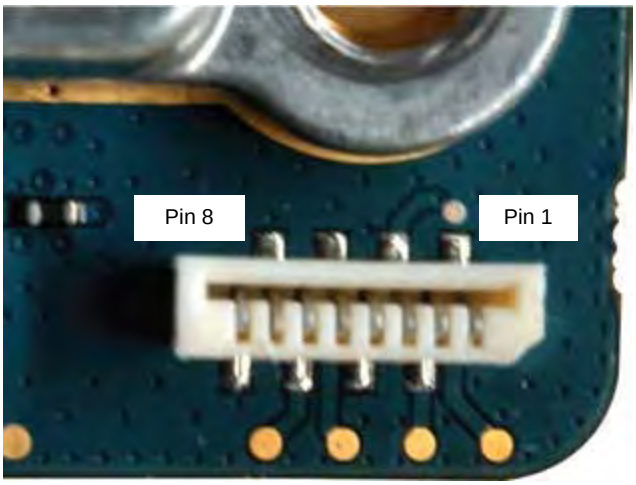

3.11

Station Control Wireline/Aux Board Interface Connector

Refer to SLR 8000 Wireline on page 149 for details.

Chapter 4

SLR 8000 Power Amplifier

4.1
Description

The Power Amplifier Module is described in this section. A general description, identification of inputs and outputs and functional theory of operation are provided. The information provided is sufficient to give service personnel a functional understanding of the module, allowing maintenance and troubleshooting to the module level.

4.2
General Description

The Power Amplifier (PA) is a forced convection-cooled RF power amplifier. It accepts a low-level modulated RF signal from the Exciter Module, and amplifies it for transmission via the site transmit antenna port. The PA is non-linear, and is therefore used for Continuous Wave (CW) applications only. The output power is continually monitored and regulated by a feedback and control loop, with a power output control voltage being generated by the transmitter control circuitry located on the PA. All configuration and control signals are connected to the modem module via the flex connected between the modules.

NOTICE: The power amplifier cooling fan is replaceable and external to the power amplifier itself. See SLR 8000 Maintenance and Disassembly/Reassembly on page 109 for replacement details.

4.3
Input and Output Connections

Figure 15: Input and Output Connections on page 56 shows the PA input and output connections.

Figure 15: Input and Output Connections

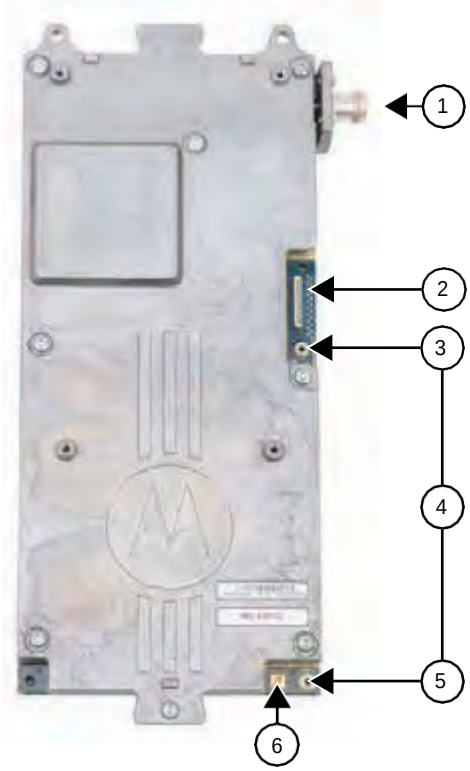

Table 9: Callout Legend

Label	Description
1	Antenna Port
2	Modem Interface
3	(+) DC Input
4	DC Input
5	(-) DC Input
6	Exciter Input

4.4 Frequency Ranges

The power amplifier module models cover the following ranges:

- 136–174 MHz
- 400–470 MHz
- Rx : 806–825 MHz, 896–902 MHz
  Tx : 851–870 MHz, 935–941 MHz

4.5 Specifications

Table 10: Specifications of Power Amplifier on page 57 shows the specifications of SLR 8000 Base Station/Repeater's Power Amplifier (PA).

Table 10: Specifications of Power Amplifier

Parameter	Specifications		
	VHF	UHF	800/900 MHz
Operational Frequency Range	136–174 MHz	400–470 MHz	851–870 MHz & 935–941 MHz
Minimum Input Return Loss (Tx mode)	15 dB		
Rated RF Input Power	40 dBm		
Maximum Standby Power Consumption	0.5 W		
Rated RF Output Power Range	1–100 W		
Supply Nominal Voltage (Transmit Power Dependent)	11–15.75 VDC		
Maximum Current Draw	14.0 A		

4.6 Modem Interface

The digital interface to the modem module utilizes a 20-pin vertical LIF connector. Its location is shown in Figure 15: Input and Output Connections on page 56. See the following figure for front panel interface connector pin locations.

Figure 16: Modem Interface Connector Pin Locations

[4] When the SLR 8000 Base Station/Repeater is operating from a 12 VDC source, the PA input voltage follows the base station/repeater's DC input source. When operating from a 12 VDC source, the output power will be limited to 50 W maximum.

Chapter 5

SLR 8000 Power Supply

5.1
Description

In this chapter, a general description, performance specifications, and identification of the inputs and outputs are given for the power supply. The information provided is sufficient to give service personnel a functional understanding of the module, allowing maintenance and troubleshooting to the module level.

See SLR 8000 Maintenance and Disassembly/Reassembly on page 109 for detailed removal or installation procedures for all modules in the SLR 8000 Base Station/Repeater.

5.1.1
General Description

The power supply, with front-to-rear airflow, operates from either an AC or DC input and provides the DC operating voltage for the SLR 8000 Base Station/Repeater. The power supply also provides an integrated battery charger to maintain the charge on a negatively grounded 12 VDC (nominal) or 24 VDC (nominal) battery system.

Figure 17: Front View of the SLR 8000 Power Supply on page 59 displays the front and rear views of the SLR 8000 Power Supply.

Additionally, the power supply affords the following performance features:

- Power Factor Correction (PFC) – aids in lowering the ampacity requirements of the AC power source.
- Over-Voltage Protection (OVP) – lowers the risk of damaging the base station/repeater should input AC or DC levels approach damaging levels.
- Over-Current Protection (OCP) – aids in preventing a cascaded failure within the base station/repeater.
- Reverse Polarity Protection – aids in preventing damage to the base station/repeater due to installation mishaps.
- Configurable Battery Charger Voltage – tailors the float voltage to your battery manufacturer's charging recommendations.
- Configurable Low Voltage Disconnect (LVD) – tailors the battery disconnect voltage to your battery manufacturer's recommendations.
- Configurable Power Source Preference – when both AC and DC sources are present (and within their respective operational bounds), this feature allows one to select the primary power source the base station/repeater uses.
- Configurable DC Power Source – allows the selection of either a 12 VDC or 24 VDC power system.
- Battery Revert – should the AC source be interrupted, this function allows the power supply to seamlessly transfer to a DC source until the AC source is restored. This results in uninterrupted radio service for as long as DC power can be provided.

NOTICE:
A user supplied external battery system is required to support the battery backup feature so that when the AC power fails, the SLR 8000 Base Station/Repeater can be powered from a DC battery source if it is connected to the Power Supply.

The power supply cooling fan is replaceable and external to the power supply itself. See SLR 8000 Maintenance and Disassembly/Reassembly on page 109 for replacement details.

Figure 17: Front View of the SLR 8000 Power Supply

Table 11: Callout Legend

Label	Description
1	Air Intake

Figure 18: Rear View of the SLR 8000 Power Supply

Table 12: Callout Legend

Label	Description
1	Air Exhaust

5.2

Specifications

Table 13: Power Supply AC Performance Specifications on page 60, Table 14: Power Supply DC Performance Specifications on page 60 and Table 15: Power Supply Battery Charger Performance Specifications on page 60 show the electrical performance specifications for the Power Supply.

Table 13: Power Supply AC Performance Specifications

Parameter	Value or Range
Input Voltage Range	100–240 VAC
Input Frequency Range	47–63 Hz
Steady State Output Voltage	Transmit Power dependent 11–15.75 VDC
Output Current (Max)	27 A (excluding charger current)
Output Ripple	25 mVp-p @ 25 °C (77 °F)

Table 14: Power Supply DC Performance Specifications

Parameter	Value or Range
Input Voltage Range (24 V System)	20.6–32 VDC
Input Voltage Range (12 V System)	11–15.5 VDC
Steady State Output Voltage (24 V System)	Transmit Power dependent (11–15.75 VDC)
Steady State Output Voltage (12 V System)	Input voltage dependent (0–0.4 V below input)
Output Current (Max)	27 A
Output Ripple	25 mV p-p, @ 25 °C (77 °F)

Table 15: Power Supply Battery Charger Performance Specifications

Parameter	Value or Range
Charging Voltage Range (24 V System)	27.0–28.4 VDC (default 27.6 VDC: configurable)
Charging Voltage Range (12 V System)	13.5–14.2 VDC (default 13.8 VDC: configurable)
Charging Current (Max)	5 A (in addition to output current)

NOTICE: The battery charger will not charge 12 V or 24 V systems, if the battery potential drops below 10 V or 20 V respectively.
California Energy Commission (CEC) Compliance testing was performed with the following recommended 24 V Lead-acid battery:

- Sprinter S12V370NGF
- GNB Industrial Power, a division of Exide Technologies, Aurora, Illinois, USA 60504

If charging 24 V, two of these must be connected in series, and charge time may take up to 25 hr. If charging 12 V, a single battery should be used, and charge time may take up to 25 hr.

5.3

Power Supply Interface

This section describes the power supply interface such as the power source inputs, power supply outputs, its digital interface, and the power supply output cable signaling.

5.3.1

Power Source Inputs

Figure 19: Power Source Inputs

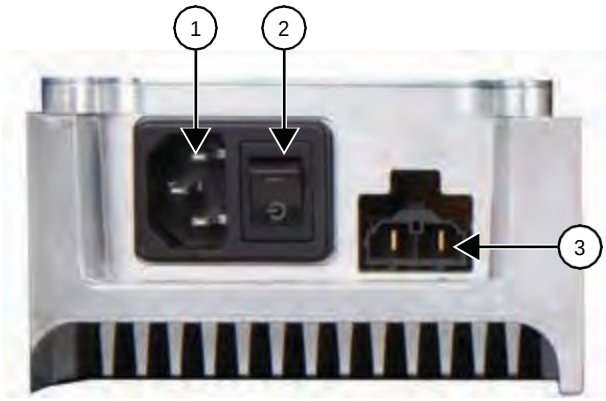

Table 16: Callout Legend

Label	Description
1	AC Source Input Connector
2	Power Switch
3	DC Source Input Connector (also charging output)

NOTICE: When the power switch is in standby, all outputs are disabled (regardless of input source(s) connected). This includes the charger output as well (if charging is enabled).

5.3.2

Power Supply Outputs

Figure 20: Power Supply Outputs

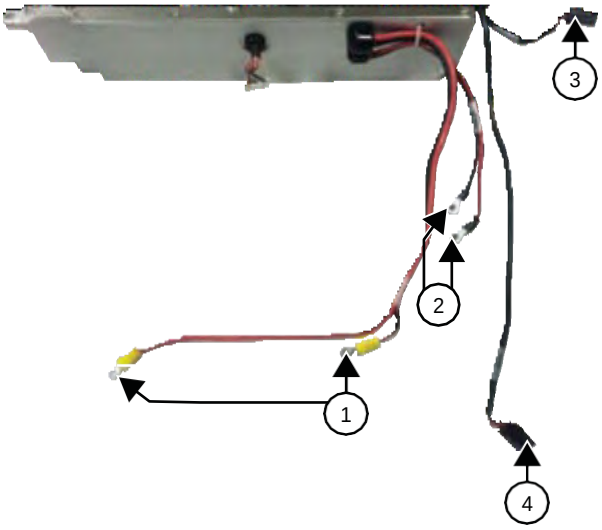

Table 17: Callout Legend

Label	Description
1	Power Amplifier
2	Modem
3	Power Supply/ Modem Fan
4	Power Amplifier Fan

5.3.3
Power Supply Digital Interface

Figure 21: Power Supply Digital Interface

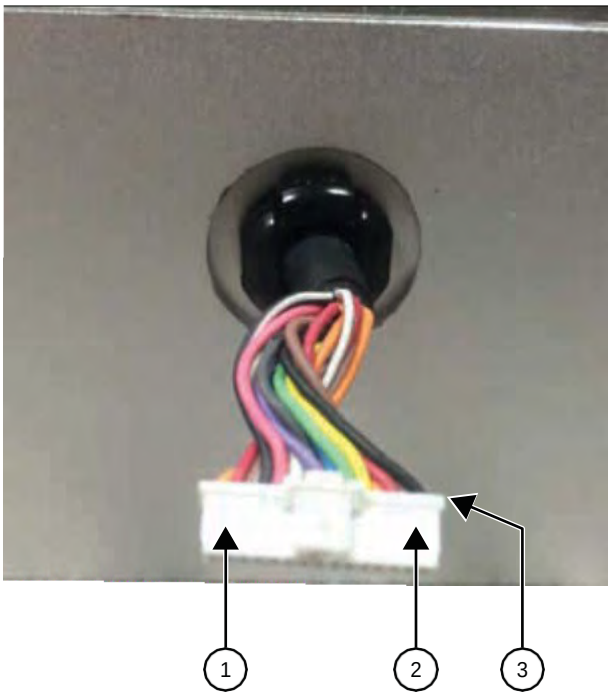

Table 18: Callout Legend

Label	Description
1	Pin 15
2	Pin 1
3	Modem Interface

5.3.4
Power Supply Output Cable Signaling

Table 19: Power Supply Output Cable SIgnalling

Output Load	Signal
Power Amplifier	Red, 11–15.75 VDC
	Black with Red Strip–Ground
Modem	Red, 11–15.75 VDC
	Black with Red Strip–Ground
Power Amplifier Fan	Red, 8 –12 VDC (nominal)
	Black–Ground
	Yellow–Fan speed detect

Output Load	Signal
	Brown–Fan speed control
Power Supply/ Modem Fan	Red, 8 –12 VDC (nominal)
	Black–Ground
	Yellow–Fan speed detect
	Brown–Fan speed control

Chapter 6

SLR 8000 Front Panel

6.1
Description

The Front Panel Module is described in this section. A general description, identification of inputs and outputs and functional theory of operation are provided. The information provided is sufficient to give service personnel a functional understanding of the module, allowing maintenance and troubleshooting to the module level.

6.1.1
General Description

The Front Panel board user interface includes seven LED indicators, an integrated speaker with volume control, a microphone port, and a USB device port. The board is connected to the modem via a 30-pin flex cable.

The LED indicators inform the user of the state of the base station/repeater, while the USB device port is used to interface with the base station/repeater through the Customer Programming Software (CPS). The speaker and microphone service interface is intended to yield a qualitative assessment of both analog and digital audio quality.

6.2
Input and Output Connections

The following figures show the various front panel Input and Output connections.

Figure 22: Front Panel Input Connections

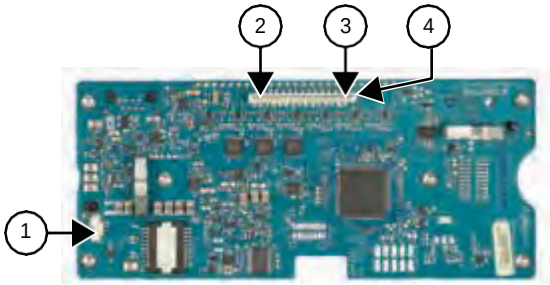

Table 20: Callout Legend

Label	Description
1	Speaker Interface
2	Pin 30
3	Pin 1
4	Modem Interface

Figure 23: Front Panel Output Connections

Table 21: Callout Legend

Label	Description
1	Speaker Volume Adjust Buttons
2	Microphone Connector
3	USB Device Connector

6.3
Modem Interface

The interface to the modem is made through a 30-pin flex cable. The connector on the front panel board is a 30-pin horizontal LIF connector.

The location can be seen in Input and Output Connections on page 65.

6.4
USB Interface

The Front Panel USB device port is the interface used for connecting the base station/repeater to a computer in order to use the Customer Programming Software.

See Figure 22: Front Panel Input Connections on page 65 for the location. A standard “Type A” to “Type B” USB cable facilitates the connection. See Accessories, Service Tools on page 193 for the noted USB cable part number.

6.5
LED Indicators

The Front Panel houses seven LED indicators used for displaying the state of the base station/ repeater.

For state details, refer to Table 5: SLR 8000 Front Panel LED Definitions on page 41.

6.6
Speaker Volume Adjust Buttons

The front panel assembly contains an integrated speaker which is controlled via the two front panel speaker volume adjust buttons.

The Front Panel speaker audio is supported in both analog and digital modes of operation. In digital modes of operation, via CPS configuration the user has the ability to configure the Front Panel speaker audio for either slot 1, slot 2, or a mix of slot 1 and slot 2 audio.

6.7 Microphone

The Front Panel port (RJ45-Jack) is designed for interface to the GMMN4063 microphone. Modulation sensitivity for 60% rated system deviation is typically 56 mVrms (158 mVpp).

The Front Panel microphone port is supported in both analog and digital modes of operation. In digital modes of operation, via CPS configuration the user has the ability to configure the Front Panel microphone audio for either slot 1 or slot 2.

NOTICE: Operation of the Front Panel Speaker and Microphone in digital modes of operation requires an optionally purchased software license. The optional software license allows Front Panel Speaker Audio support in all digital system types, with the Front Panel Microphone Audio support limited to single-site digital conventional operations (i.e. non-IP Site Connect conventional).

Chapter 7

SLR 8000 Back Panel

7.1
Description

The Back Panel interface provides the electrical interconnection interface between the SLR 8000 Base Station/Repeater and the end user's system.

This includes the connectors necessary to interface the repeater to RF peripheral equipment, power system, system controllers, LANs, as well as other communications and maintenance equipment. This section provides a general description, identification of inputs/outputs, and a pin-out listing for all connectors, including information on signal names, functions, and levels.

7.1.1
General Description

The following figure shows the various interface connector locations and the table lists the connector types as well as its primary function.

Figure 24: Back Panel Connector Names and Locations (with no options installed)

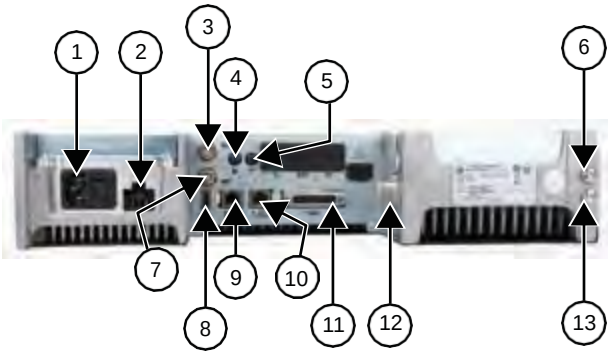

Table 22: Connector Type and Primary Function

Location	Connector Type	Function(s)
1	C14 (IEC 60320)	AC Power Inlet and Base Station/Repeater Power Switch
2	Molex 42818-0212	DC Power Inlet and DC Charger Outlet
3	BNC – Female	Receiver RF (Rx)
4	Option Dependent	Option Dependent 1 (future)
5	Option Dependent	Option Dependent 2 (future)
6	T30 TORX Screw	Bonding Ground Connection
7	BNC – Female	Frequency Reference Input (REF)
8	Type A Socket	USB
9	RJ-45 – Jack	Ethernet 2 (future)
10	RJ-45 – Jack	Ethernet 1

Location	Connector Type	Function(s)
11	DB25 – Female	Aux: Rx Audio, Tx Audio, PTT, COR, Accessory Power, 1 PPS, and GPIO
12	N-Type – Female	Transmitter RF (Tx)
13	T30 TORX Screw	Bonding Ground Connection

Figure 25: Back Panel Connector Names and Locations

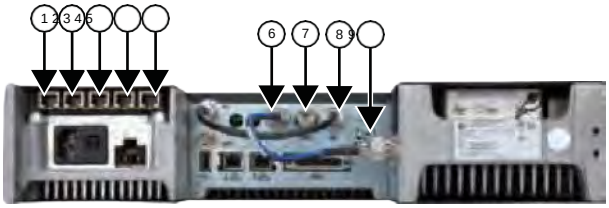

Table 23: Connector Type and Primary Function

Location	Connector Type	Function(s)
1	RJ-45 – Jack	Wireline #1 – Balanced Rx and Tx Audio with E&M – (Optional)
2	RJ-45 – Jack	Wireline #2 – Balanced Rx and Tx Audio with E&M – (Optional & future)
3	RJ-45 – Jack	GPIO 1 – (Optional & future)
4	RJ-45 – Jack	GPIO 2 – (Optional & future)
5	RJ-45 – Jack	GPIO 3 – (Optional & future)
6	N-Type-Female	RF Antenna Relay – Transmitter RF – (Optional)
7	N-Type-Female	RF Antenna Relay – Antenna RF – (Optional)
8	N-Type-Female	RF Antenna Relay – Receiver RF – (Optional)
9	Molex 43020-0200	External Circulator Temperature Sense - (Optional)

7.2 Back Panel Interfaces

This section describes the back panel interfaces of the SLR 8000 Base Station/Repeater.

7.2.1 AC Power Inlet

The AC power inlet connector is of the C14 type socket (IEC 60320) and accepts interface to C13 type plugged (IEC 60320) power cords.

Figure 26: AC Power Inlet Connector on page 70 shows the location of the pins and Table 24: AC Power Inlet Connector on page 70 lists the functional characteristics of the connector's pins.

Figure 26: AC Power Inlet Connector

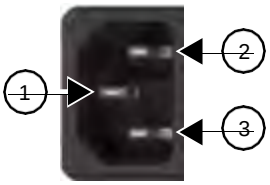

Table 24: AC Power Inlet Connector

Location	Pin Assignment	Type	Signal Characteristics
1	Earth	Power	100–240 VAC (Line to Neutral)
2	Line		4 A (max)
3	Neutral		

Figure 27: Repeater Power Switch

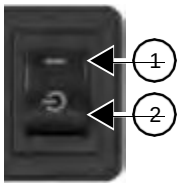

Table 25: Callout Legend

Label	Description
1	ON (fully powered)
2	STANDBY

7.2.2
DC Power Inlet/DC Charger Outlet

The DC power inlet/DC charger outlet connector is a Molex 42818-02012 panel mount receptacle and accepts interface to Molex 42816-0212 plugs.

Figure 28: DC Power Inlet/DC Charger Outlet Connector on page 70 shows the location of the pins and Table 26: DC Power Inlet/DC Charger Outlet Connector on page 70 lists the functional characteristics of the connector's pins.

Figure 28: DC Power Inlet/DC Charger Outlet Connector

Table 26: DC Power Inlet/DC Charger Outlet Connector

Location	Pin Assignment	Type	Signal Characteristics
1	Positive	Power	11–14.4 VDC
2	Negative		17 A (max)

7.2.3
Option 1/GNSS

Not supported at this time (No connection)

Figure 29: Option 1/GNSS Connector

7.2.4
Option 2/WLAN

Not supported at this time (No connection)

Figure 30: Option 2/WLAN Connector

7.2.5
USB

Not supported at this time. Type A socket (Host Connection) that supports the USB 2.1 protocol standard.

See Figure 31: USB Connector on page 71 and Table 27: USB Connector on page 71 the location of the pins and the functional characteristics of the connector's pins.

Figure 31: USB Connector

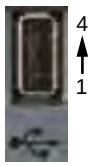

Table 27: USB Connector

Location	Pin Assignment	Type	Signal Characteristics
1	VBUS	USB Physical Layer	+5 VDC
2	D-		3.6 V differential data
3	D+		
4	GND		Ground

7.2.6
Ethernet 1

Fully compliant with IEEE and 802.3 and 802.3u standards. Supports 10Base-T, 100Base-Tx rates, full duplex, half duplex mode and flow control.

See the Figure 32: Ethernet 1 Connector on page 72 and Table 28: Ethernet 1 Connector on page 72 for the location of the pins and the functional characteristics of the connector's pins.

Figure 32: Ethernet 1 Connector

Table 28: Ethernet 1 Connector

Location	Pin Assignment	Type	Signal Characteristics
1	Ethernet Tx+	Ethernet Physical Layer	5 V differential data
2	Ethernet Tx-		
3	Ethernet Rx+		
4	Unused		N/A
5	Unused		N/A
6	Ethernet Rx-		5 V differential data
7	Unused		N/A
8	Unused		N/A

7.2.7

Ethernet 2

Not supported at this time. Fully compliant with IEEE and 802.3 and 802.3u standards. Supports 10Base-T, 100Base-Tx rates, full duplex, half duplex mode and flow control.

See Figure 33: Ethernet 2 Connector on page 72 and Table 29: Ethernet 2 Connector on page 72 for the location of the pins and the functional characteristics of the connector's pins.

Figure 33: Ethernet 2 Connector

Table 29: Ethernet 2 Connector

Location	Pin Assignment	Type	Signal Characteristics
1	Ethernet Tx+	Ethernet Physical Layer	5 V differential data
2	Ethernet Tx-		
3	Ethernet Rx+		
4	Unused		N/A
5	Unused		N/A
6	Ethernet Rx-		5 V differential data
7	Unused		N/A

Location	Pin Assignment	Type	Signal Characteristics
8	Unused		N/A

7.2.8

Auxiliary (Aux)

This connection supports the analog interface to the SLR 8000 Base Station/Repeater, which includes audio, station control, station indicators, accessory power, and provisions for timing used in various system implementations.

Location of the pins and functional characteristics of the connector's pins are shown in the following figure and table.

Figure 34: Auxiliary Connector

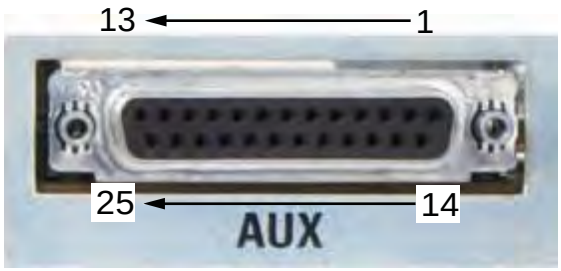

Table 30: Auxiliary Connector

Location	Pin Assignment	Type	Signal Characteristics
1	Tx Audio	Audio	Transmit Audio – Nominal input level is 80 mVrms for 60% deviation with scaling factor set to 100%. 600 Ω input impedance.
2	GPIO 1	Digital	Output Logic Low: 0.5 VDC max Output Logic High: Open Collector with 4.7 k pull-up to 5 V Input Logic Low: 0–0.8 VDC Input Logic High: 3.0–14 VDC
3	Future Use	-	-
4	GPIO 2	Digital	Output Logic Low: 0.5 VDC max Output Logic High: Open Collector with 4.7 k pull-up to 5 V Input Logic Low: 0–0.8 VDC Input Logic High: 3.0–14 VDC
5	GPIO 10	Digital	Output Logic Low: 0.5 VDC max Output Logic High: Open Collector with 10 k pull-up to 5 V Input Logic Low: 0–0.8 VDC Input Logic High: 3.0–14 VDC
6	GPIO 9	Digital	Output Logic Low: 0.5 VDC max Output Logic High: Open Collector with 10 k pull-up to 5 V Input Logic Low: 0–0.8 VDC Input Logic High: 3.0–14 VDC

Location	Pin Assignment	Type	Signal Characteristics
7	Rx Audio	Audio	Receiver Audio – Nominal output level is 330 mVrms (into a 50 k Ohm load) with a 60% deviation receive signal. 1000 Ω output impedance.
8	GPIO 6	Digital	Output Logic Low: 0.5 VDC max Output Logic High: Open Collector with 4.7 k pull-up to 5 V Input Logic Low: 0–0.8 VDC Input Logic High: 3.0–14 VDC
9	Ground		
10	GPIO 7/RSSI	Digital or Analog	Digital: Output Logic Low: 0.5 VDC max Output Logic High: Open Collector with 10 k pull-up to 5 V Input Logic Low: 0–0.8 VDC Input Logic High: 3.0–14 VDC Analog RSSI: Typically 0.5 VDC for -120 dBm to 2.7 VDC for -60 dBm carrier. Variation with carrier level at approximately 50 mV/dBm.
11	GPIO 11	Digital	Digital: Output Logic Low: 0.5 VDC max Output Logic High: Open Collector with 10 k pull-up to 5 V Input Logic Low: 0–0.8 VDC Input Logic High: 3.0–14 VDC
12	GPIO 12	Digital	Digital: Output Logic Low: 0.5 VDC max Output Logic High: Open Collector with 10 k pull-up to 5 V Input Logic Low: 0–0.8 VDC Input Logic High: 3.0–14 VDC
13	Tx Data	Digital or Analog	Transmit Data/PL/DPL – Nominal input level is 80 mVrms for 20% deviation with scaling factor set to 100%. 600 Ω input impedance.
14	Future Use	-	-
15	GPIO 3	Digital	Output Logic Low: 0.5 VDC max Output Logic High: Open Collector with 4.7 k pull-up to 5 V Input Logic Low: 0–0.8 VDC Input Logic High: 3.0–14 VDC
16	Ground		
17			
18			
19			

Location	Pin Assignment	Type	Signal Characteristics
20	Fused B+	Power	The B+ is 13.6 VDC when base station/repeater is sourced by AC, and can range from 11–14.4 VDC when sourced by DC. 1 A (max).
21	GPIO 8	Digital	Digital: Output Logic Low: 0.5 VDC max Output Logic High: Open Collector with 10 k pull-up to 5 V Input Logic Low: 0–0.8 VDC Input Logic High: 3.0–14 VDC
22	Tx Audio	Audio	Transmit Audio – Nominal input level is 80 mVrms for 60% deviation with scaling factor set to 100%. 600 Ω input
23	GPIO 4	Digital	Output Logic Low: 0.5 VDC max Output Logic High: Open Collector with 4.7 k pull-up to 5 V Input Logic Low: 0–0.8 VDC Input Logic High: 3.0–14 VDC
24	GPIO 5	Digital	Output Logic Low: 0.5 VDC max Output Logic High: Open Collector with 4.7 k pull-up to 5 V Input Logic Low: 0–0.8 VDC Input Logic High: 3.0–14 VDC
25	Future Use	-	-

7.2.9
Frequency Reference

The Frequency Reference port is a BNC (female) type connector.

Figure 35: Frequency Reference Connector

Various external frequency reference signal types can be provided to the SLR 8000 Base Station/ Repeater for normal operation. Table 31: Frequency Reference on page 76 provides a list of acceptable input signal types as well as their permissible levels.

Table 31: Frequency Reference

Frequency (MHz)	Wave-form[5]	Level (Vpp)	Impedance (Ω)[6]	Note
5	Sine	1.5–5.3	100 k	AC Coupled
5	Square[5]	1.5–5.3	100 k	AC Coupled
10	Sine	1.5–5.3	100 k	AC Coupled
10	Square[5]	1.5–5.3	100 k	AC Coupled

7.2.10
Receiver RF

The Receiver RF port is a BNC (female) type connector.

Figure 36: Receiver RF Connector

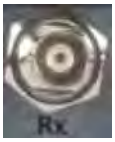

7.2.11
Transmitter RF

The Transmitter RF port is an N-Type (female) type connector.

Figure 37: Transmitter RF Connector

[5] Square wave duty cycle range is 45–50%.
[6] Impedance of the SLR 8000 Base Station/Repeater's frequency reference port.

7.2.12

Bonding Ground Connection

The base station/repeater Bonding Ground Connection is realized with two M6 x 1 x 3 mm screws (T30 Torx).

Figure 38: Bonding Ground Connection

7.2.13

Wireline 1 (WL1)

This is an RJ-45 connection that supports the wireline interface to the SLR 8000 Base Station/ Repeater, which includes configuration provisions for a balanced 2-wire or 4-wire operation (via CPS), configurable impedance settings (via CPS), and settable audio/tone levels (via Tuner).

Additionally, the interface also supports electrically isolated E&M signaling, tone remote control, and DC remote control. See SLR 8000 Wireline on page 149 of this manual for additional details.
The following table lists the functional characteristics of the connector's pins.

Figure 39: RJ-45 Connector (Wireline 1)

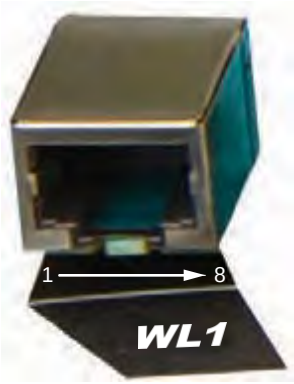

Table 32: Functional Characteristics of RJ-45 Connector (Wireline 1)

Location	Pin Assignment	Type	Signal Characteristics
1	Line 2+	Audio	2-wire Phone Line (differential) input/ output, or 4-wire Phone Line (differential) output; 600 Ω typical impedance (country specif-ic)
2	Line 2-		
3	Aux In 1+	DC	Opto-Isolated In-Current flow to Activate

Location	Pin Assignment	Type	Signal Characteristics
4	Line 1-	Audio	4-wire Phone Line (differential) input; 600 Ω typical impedance (country specific)
5	Line 1+		
6	Aux In 1-	DC	Opto-Isolated In-Current flow to Activate
7	Aux Out Relay 1 (N.O.)	DC	Form Relay A Closed When Active
8	Aux Out Relay 1 (N.O.)	DC	Form Relay A Closed When Active

7.2.14
Wireline 2 (WL2)

Not supported at this time. This is an RJ-45 connection that supports the wireline interface to the SLR 8000 Base Station/Repeater, which includes configuration provisions for a balanced 2-wire or 4-wire operation (through CPS), configurable impedance settings (through CPS), and settable audio/tone levels (through Tuner).

Additionally, the interface also supports electrically isolated E&M signaling, tone remote control, and DC remote control. See SLR 8000 Wireline on page 149 of this manual for additional details. The following table lists the functional characteristics of the connector's pins.

Figure 40: RJ-45 Connector (Wireline 2)

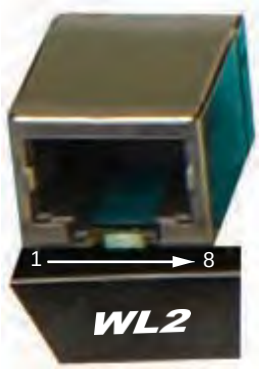

Table 33: Functional Characteristics of RJ-45 Connector (Wireline 2)

Location	Pin Assignment	Type	Signal Characteristics
1	Line 4+	Audio	2-wire Phone Line (differential) input/output, or 4-wire Phone Line (differential) output; 600 Ω typical impedance (country specific)
2	Line 4-		
3	Aux In 2+	DC	Opto-Isolated In-Current flow to Activate
4	Line 3-	Audio	4-wire Phone Line (differential) input; 600 Ω typical impedance (country specific)
5	Line 3+		
6	Aux In 2-	DC	Opto-Isolated In-Current flow to Activate
7	Aux Out Relay 2 (N.O.)	DC	Form Relay A Closed When Active

Location	Pin Assignment	Type	Signal Characteristics
8	Aux Out Relay 2 (N.O.)	DC	Form Relay A Closed When Active

7.2.15

GPIO 1

Not supported at this time. This is an RJ-45 connection that provides four additional GPIO connections to the SLR 8000 Base Station/Repeater. The following table lists the functional charactistics of the connector's pins.

Figure 41: RJ-45 Connector (GPIO 1)

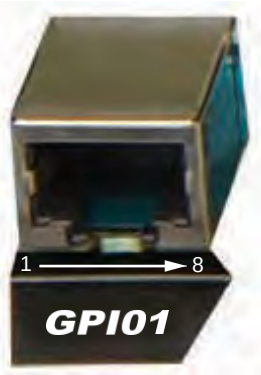

Table 34: Functional Characteristics of RJ-45 Connector (GPIO1)

Location	Pin Assignment	Type	Signal Characteristics
1	Ground		
2	Aux GPIO 1	Digital	Output Logic Low: 0.5 VDC max Output Logic High: Open Collector with 10k pull-up to 5 V Input Logic Low: 0–0.8 VDC Input Logic High: 3.0–14 VDC
3	Ground		
4	Aux GPIO 2	Digital	Output Logic Low: 0.5 VDC max Output Logic High: Open Collector with 10k pull-up to 5 V Input Logic Low: 0–0.8 VDC Input Logic High: 3.0–14 VDC
5	Ground		
6	Aux GPIO 3	Digital	Output Logic Low: 0.5 VDC max Output Logic High: Open Collector with 10k pull-up to 5V Input Logic Low: 0–0.8 VDC Input Logic High: 3.0–14 VDC

Location	Pin Assignment	Type	Signal Characteristics
7	Ground		
8	Aux GPIO 4	Digital	Output Logic Low: 0.5 VDC max Output Logic High: Open Collector with 10k pull-up to 5 V Input Logic Low: 0–0.8 VDC Input Logic High: 3.0–14 VDC

7.2.16

GPIO 2

Not supported at this time. This is an RJ-45 connection that provides four additional GPIO connections to the SLR 8000 Base Station/Repeater. The following table lists the functional charactistics of the connector's pins.

Figure 42: RJ-45 Connector (GPIO 2)

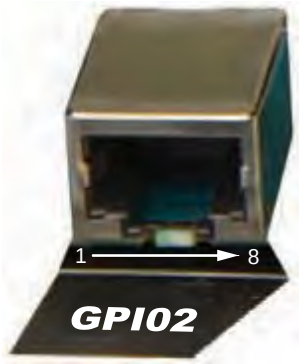

Table 35: Functional Characteristics of RJ-45 Connector (GPIO 2)

Location	Pin Assignment	Type	Signal Characteristics
1	Ground		
2	Aux GPIO 5	Digital	Output Logic Low: 0.5 VDC max Output Logic High: Open Collector with 10k pull-up to 5 V Input Logic Low: 0–0.8 VDC Input Logic High: 3.0–14 VDC
3	Ground		
4	Aux GPIO 6	Digital	Output Logic Low: 0.5 VDC max Output Logic High: Open Collector with 10k pull-up to 5 V Input Logic Low: 0–0.8 VDC Input Logic High: 3.0–14 VDC
5	Ground		
6	Aux GPIO 7	Digital	Output Logic Low: 0.5 VDC max

Location	Pin Assignment	Type	Signal Characteristics
			Output Logic High: Open Collector with 10k pull-up to 5 V Input Logic Low: 0–0.8 VDC Input Logic High: 3.0–14 VDC
7	Ground		
8	Aux GPIO 8	Digital	Output Logic Low: 0.5 VDC max Output Logic High: Open Collector with 10k pull-up to 5 V Input Logic Low: 0–0.8 VDC Input Logic High: 3.0–14 VDC

7.2.17

GPIO 3

Not supported at this time. This is an RJ-45 connection that provides four additional GPIO connections to the SLR 8000 Base Station/Repeater. The following table lists the functional charactistics of the connector's pins.

Figure 43: RJ-45 Connector (GPIO 3)

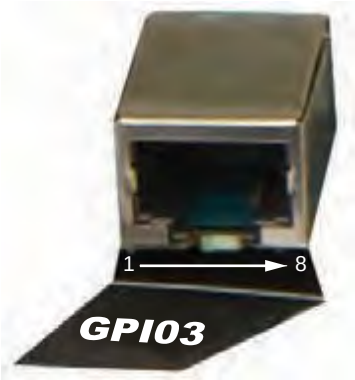

Table 36: Functional Characteristics of RJ-45 Connector (GPIO 3)

Location	Pin Assignment	Type	Signal Characteristics
1	Ground		
2	Aux GPIO 9	Digital	Output Logic Low: 0.5 VDC max Output Logic High: Open Collector with 10k pull-up to 5 V Input Logic Low: 0–0.8 VDC Input Logic High: 3.0–14 VDC
3	Ground		
4	Aux GPIO 10	Digital	Output Logic Low: 0.5 VDC max Output Logic High: Open Collector with 10k pull-up to 5 V

Location	Pin Assignment	Type	Signal Characteristics
			Input Logic Low: 0–0.8 VDC Input Logic High: 3.0–14 VDC
5	Ground		
6	Aux GPIO 11	Digital	Output Logic Low: 0.5 VDC max Output Logic High: Open Collector with 10k pull-up to 5 V Input Logic Low: 0–0.8 VDC Input Logic High: 3.0–14 VDC
7	Ground		
8	Aux GPIO 12	Digital	Output Logic Low: 0.5 VDC max Output Logic High: Open Collector with 10k pull-up to 5 V Input Logic Low: 0–0.8 VDC Input Logic High: 3.0–14 VDC

7.2.18

RF Antenna Relay

When installed, the optional RF Antenna Relay presents an additional three N-Type (female) connectors to the back panel.

When installed, the RF Antenna Relay's Tx connection is cabled to the "Transmitter RF" connector (see Transmitter RF on page 76) or to the optional External Dual Circulator Tray (see *SLR 8000 Radio Frequency Distribution System (RFDS) Equipment Chapter*) with the RF Antenna's Rx connection is cabled to the "Receive RF" connector (see Receiver RF on page 76). The RF Antenna Relay's ANT connection is then interfaced to the antenna and/ or greater radio frequency distribution system.

See *SLR 8000 Radio Frequency Distribution System (RFDS) Equipment Chapter* for more details regarding the RF Antenna Relay as well as other RF peripheral options.

Figure 44: RF Antenna Relay Connectors

7.2.19
P-TEMP

The P-TEMP connector is a MOLEX 43020-0200 panel mount plug and accepts interface to MOLEX 43025-0200 receptacles. The P-TEMP interface provides for termperature sensing of the optional External Dual Circulator Tray.

Figure 45: P-TEMP Connector

Chapter 8

SLR 8000 Test Equipment And Service Aids

8.1
Recommended Test Equipment

The list of equipment includes most of the standard test equipment required for servicing Motorola Solutions equipment.

Table 37: Recommended Test Equipment

Equipment	Example	Application
Service Monitor	Aeroflex 3920 Digital Radio Test Set or equivalent [7] http://www.aeroflex.com	Frequency/deviation meter, signal generator, oscilloscope, RF power meter for wide-range troubleshooting, and alignment.
Digital RMS Multimeter	Fluke 179 or equivalent http://www.aeroflex.com.	AC/DC voltage measurements.

8.2
Service Aids

Service Tools on page 193 lists the service aids recommended for working on the SLR 8000 Base Station/Repeater. While all of these items are available from Motorola Solutions, most are standard workshop equipment items, and any equivalent item capable of the same performance may be substituted for the item listed.

[7] Equivalency can be established with "all-in-one" service monitors and/or the individual functional components of a service monitor (such as RF Signal Generator, RF Spectrum Analyzer, RF Deviation Meter, RF Power Meter, and oscilloscope).

Chapter 9

SLR 8000 Performance Check or Testing

9.1
Performance Check or Testing General Description

The SLR 8000 Base Station/Repeater meets published specifications through the manufacturing process by utilizing high-accuracy laboratory-quality test equipment. The recommended field service equipment approaches the accuracy of the manufacturing equipment with few exceptions. This accuracy must be maintained in compliance with the equipment manufacturer's recommended calibration schedule.

NOTICE: Although these repeaters function in digital and analog modes, all testing is done in analog mode. Digital Base Station/Repeater tests can be performed using an Aeroflex 3900 Series Service Monitor, if the DMR Digital Base Station/Repeater Test Option is purchased. This auto testing could be performed in lieu of the following Manual testing.

9.2
Transmitter Testing

Performing this procedure requires that the SLR 8000 Base Station/Repeater be taken out of service. Unless the base station/repeater is already out of service, it is recommended that this procedure be performed during
off-peak hours so as to minimize the disruption of service to the system subscribers.

9.2.1
Introduction

Transmitter testing allows the service technician to make minor adjustments and verify proper operation of the SLR 8000 Base Station Repeater's transmit circuitry.

While most module faults can be detected by running the repeater diagnostics, the following procedure provides a more traditional method of troubleshooting the transmitter circuitry, including:

- Exciter Section of Modem Module
- Power Amplifier Module
- Power Supply Module

In general, the transmitter circuitry is exercised by injecting and measuring signals using a Service Monitor (or equivalent). Incorrect measurement values indicate a faulty module(s); measurement values within the acceptable range verify proper operation of the listed modules and circuitry.

9.2.2
Required Transmitter Test Equipment

Test equipment is required to perform procedures for performance checks or testing.

The following test equipment is required:

- Aeroflex 3920 Digital Radio Test Set (or equivalent)
- Microphone (GMMN4063_)

- Power Meter and Sensor
- Station Rear Accessory Test Cable
- Dummy Load (50 Ω, base station/repeater wattage or higher)
- Aeroflex 3920 Digital Radio Test Set (or equivalent)
- Microphone (GMMN4063_)
- Power Meter and Sensor
- Station Rear Accessory Test Cable
- Dummy Load (50 Ω, base station/repeater wattage or higher)
- DB25/RJ-45 Adapter

9.2.3
Verifying Transmitter Circuitry

The following procedure shows you ways to verify the transmitter circuitry of the repeater.

Procedure:

1. Connect and set up test equipment as shown in Figure 46: Backside - Test Equipment Setup for Verifying Transmitter Circuitry on page 87.
2. Apply input power (AC or DC) to the base station/repeater. The power supply, modem, and PA fans should run a few seconds to confirm fan operation.
3. Press the PTT switch of the microphone and observe the PA Keyed LED indicator on the Base Station/Repeater Front Panel.
   - If PA Keyed fails to light, suspect the following:
     - Faulty Power Amplifier Module
     - Faulty Modem Module
     - Loose or bad Exciter-to-PA RF cable
     - Loose or bad PA-to-antenna RF output cable
     - Improperly terminated PA RF output cable
     - Faulty Power Supply Module
4. Measure output power by pressing the PTT button and observing reading on an in-line wattmeter.
   - If PA output is not at proper power (as set for particular site), adjust the output power as described in the CPS online help.
5. If PA output power is proper, set up the Service Monitor for spectrum analyzer display. Press the PTT button and observe the display. The display should show a single frequency carrier:
   - If the display shows multiple carriers evenly spaced about the carrier, suspect a faulty Exciter module or PA module.
   - If the display shows a solid carrier but it is off frequency, suspect the following:
     - Faulty Modem Module
     - Faulty external 5/10 MHz reference source (if used)
   - If the display shows a single carrier moving erratically, suspect a faulty Modem Module.
6. If display is proper, set up Aeroflex 3900 Series Communications System Analyzer to display modulation. Using the microphone, push the PTT button and speak into the microphone. Verify that the display shows an audio signal.

- If the proper display is not obtained, suspect faulty SCM or Exciter Module

7 Set the Aeroflex 3900 Series Communications System Analyzer for GEN/MON MTR.

8 Press the PTT button and speak loudly into the microphone to cause maximum deviation. Display should read:

- 4.60 kHz maximum for a 25 kHz system
- 3.68 kHz maximum for a 20 kHz system
- 2.30 kHz maximum for a 12.5 kHz system

If the proper display is not obtained, suspect faulty SCM or Exciter Module.

9 This completes the Verifying Transmitter Circuitry test procedure. If all displays and measurements are correct, the transmitter circuitry may be considered to be operating properly.

Figure 46: Backside - Test Equipment Setup for Verifying Transmitter Circuitry

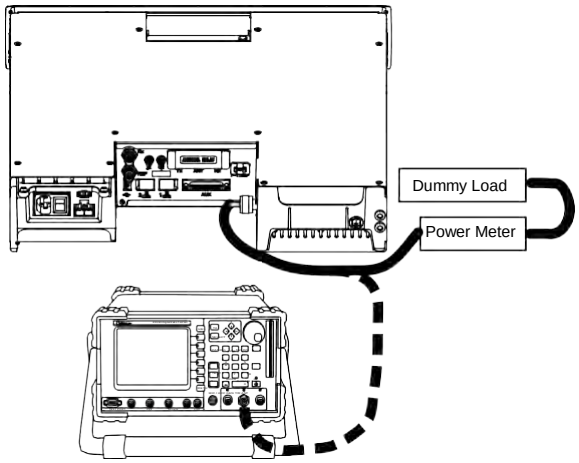

Figure 47: Frontside - Test Equipment Setup for Verifying Transmitter Circuitry

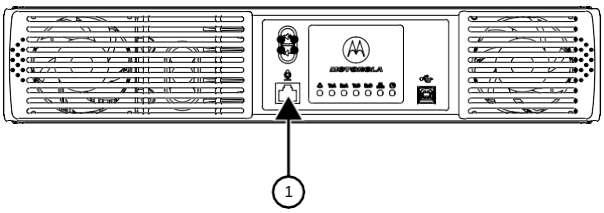

Table 38: Callout Legend

Label	Description
1	Microphone (GMMN4063_)

9.3 Receiver Testing

Receiver testing requires that the SLR 8000 Base Station/Repeater be taken out of service. Unless the base station/repeater is already out of service, it is recommended that this procedure be performed

during
off-peak hours so as to minimize the disruption of service to the system subscribers.

CAUTION:
If the base station/repeater operates as a base station/repeater, the transmit output from the base station/repeater must be connected to a dummy load to prevent over-the-air broadcast during Receiver testing.

9.3.1
Introduction

Receiver testing allows the service technician to make minor adjustments and verify proper operation of the receiver circuitry on the Modem Module.

While most module faults can be detected by running the SLR 8000 Base Station/Repeater diagnostics, the following procedure provides a more traditional method of troubleshooting the Receiver circuitry.

In general, the Receiver circuitry is exercised by injecting and measuring signals using a Service Monitor (or equivalent). Incorrect measurement values indicate a faulty module(s); measurement values within the acceptable range verify proper operation of the receiver circuitry on the Modem Module.

9.3.2
Required Test Equipment

The following test equipment is required to perform the receiver testing:

- Aeroflex 3920 Digital Radio Test Set (or equivalent)
- Station Rear Accessory Test Cable
- Dummy Load (50 Ω, base station/repeater wattage or higher) required for base station/repeaters only

9.3.3
Verifying Receiver Circuitry

This procedure shows ways you can verify the receiver circuitry of the repeater.

Procedure:

1. Connect equipment as shown in Figure 48: Backside - Test Equipment Setup for Verifying Receiver Circuitry on page 89.
2. Set the Service Monitor to generate a 1.0 µV (-107 dBm) FM signal at the Receiver frequency, modulated by a 1 kHz tone at 3 kHz deviation for 25/30 kHz channel spacing, or 1.5 kHz deviation for 12.5 kHz channel spacing. The 1 kHz tone should be audible through the Front Panel speaker. If no audio is heard, suspect the following:
   - Faulty Modem Module
   - Faulty antenna-to-Receiver preselector RF cable (for the base station/repeater with optional internal preselector)
   - Faulty Service Monitor-to-station RF cable
   - Faulty Antenna Relay cable (If installed)
   - Faulty or mistuned Preselector cable (If installed)
   - Rear Panel to Test Box cable unplugged
   - Faulty rear panel to Test Box Cable

- Front Panel speaker is at "minimum" or muted setting
- Faulty Front Panel
- Internal modem to Front Panel cable faulty or disconnected
- Internal Front Panel to speaker cable disconnected

3 If Audio is heard (the audio volume can be adjusted via the front panel volume buttons), look at the Oscilloscope window on the Aeroflex 3920 (or a separate O-Scope) and verify that the Audio level Sine Wave measures between 0.75 to 1.5 Vpp. If not, connect to Tuner and increase the RX Audio level until this is achieved. If the level cannot be obtained, suspect a faulty Modem.

4 Move the BNC cable from the Scope CH 1 input to the Audio 1 input.

5 Change System Monitor injection signal level to the noted levels in Specifications on page 36.

6 Measure the Receiver 12 dB SINAD sensitivity.

- If the SINAD level is less than 12 dB, suspect faulty Modem.

7 This completes the Verifying Receiver Circuitry test procedure. If all displays and measurements are correct, the Receiver circuitry may be considered to be operating properly. Remove test equipment, restore the base station/repeater to normal service, and (if applicable) return to the troubleshooting flow chart to resume troubleshooting sequence.

Figure 48: Backside - Test Equipment Setup for Verifying Receiver Circuitry

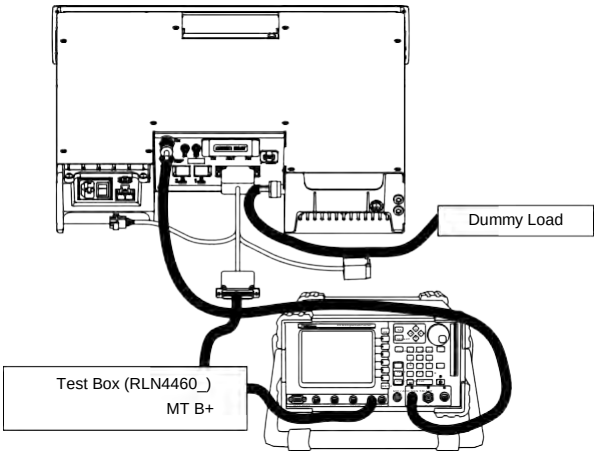

Figure 49: Frontside - Test Equipment Setup for Verifying Receiver Circuitry

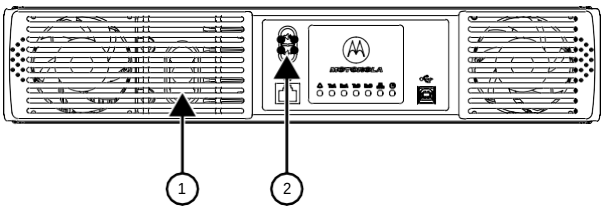

Table 39: Callout Legend

Label	Description
1	Integrated Speaker
2	Speaker Volume/Mute

9.4

Auto Test and Tune Support

Auto Test and Tune Support is an automated alignment procedure for the SLR 8000 Base/Station Repeater .

This procedure allows you to perform Test and Tune in the right method that saves time and helps to achieve higher efficiency.

To accomplish the overall Test and Tune procedure, the repeater must be tested in two test suites: Analog mode and Digital mode. This procedure includes Tuning and Testing in Analog mode and Testing in Digital mode.

NOTICE: Contact Motorola Solutions Customer Support for more details on this procedure.

Chapter 10

SLR 8000 Programming and Tuning

10.1
Programming and Tuning Introduction

This section provides an overview of the MOTOTRBO Customer Programming Software (CPS) and the MOTOTRBO Tuner application for use on Windows 7, Windows 8, or Windows 8.1. These two MOTOTRBO applications are used for the configuration and alignment of the SLR 8000 Base Station/ Repeater.

10.2
Customer Programming Software Setup

The Customer Programming Software setup, shown in Figure 50: Customer Programming Software Setup on page 92 is used to program the base station/repeater. See Figure 51: Front view of SLR 8000 Base Station/Repeater on page 92 and Figure 52: Rear view of SLR 8000 Base Station/ Repeater on page 92 for the actual connectors on the front and rear panels of the base station/ repeater.

NOTICE: See appropriate program on-line help files for the programming procedures.

CAUTION: Computer USB ports can be sensitive to Electronic Discharge. Employ proper ESD practices (wrist strap, grounding, etc.) and do not touch exposed contacts on cables when connected to a computer.

Figure 50: Customer Programming Software Setup

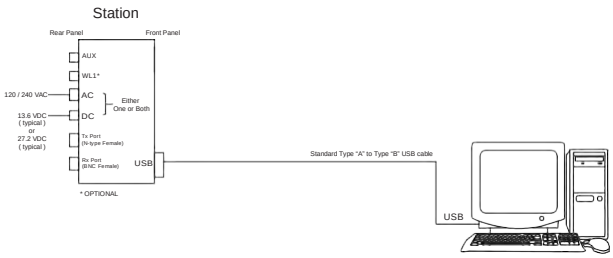

Figure 51: Front view of SLR 8000 Base Station/Repeater

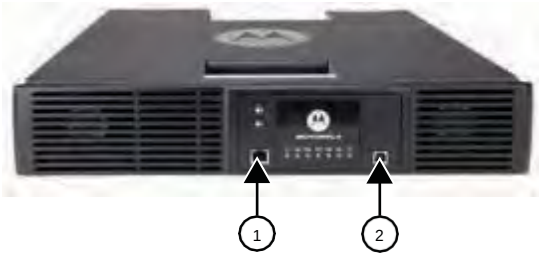

Table 40: Callout Legend

Label	Description
1	Microphone Connector
2	USB Connector

Figure 52: Rear view of SLR 8000 Base Station/Repeater

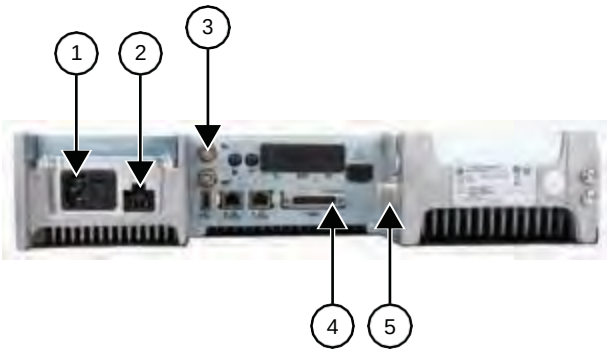

Table 41: Callout Legend

Label	Description
1	AC Inlet Connector
2	DC Inlet Connector
3	Rx RF Connector

Label	Description
4	Aux Connector
5	Tx RF Connector

10.3

Tuning the Reference Oscillator Alignment

This feature is used to adjust the reference oscillator of the SLR 8000 Base Station/Repeater. This alignment process should be done as maintenance schedules and regulations require or if the Modem FRU has been replaced in the base station/repeater.

Procedure:

1. Connect the base station/repeater's transmitter antenna port to the Communication Analyzer.
2. Power the base station/repeater from either an AC or DC source.
3. Launch the Tuner application.
4. To begin reading the base station/repeater's tuning softpot values, click **Read**.
5. Under the **TX** menu in the tree view, select **Ref Oscillator**.

   Figure 53: Tx Menu Tree (Ref. Oscillator)

6. Configure the current operating frequency into the Communications Analyzer.
7. To key up the base station/repeater, click **PTT Toggle**.
8. Adjust the working softpot value until the frequency is within the performance specifications (+/-40 Hz for UHF and VHF) from the frequency point.
9. To de-key the base station/repeater, click **PTT Toggle**.
10. To save the tuned softpot value into the base station/repeater codeplug. click **Write**.

10.4

Base Station/Repeater Tuning Setup

A personal computer (PC), Windows™ operating system, and the MOTOTRBO Tuner application are required to align the base station/repeater.

To perform the tuning procedures, the base station/repeater must be connected to the PC and test equipment setup as shown in the following figure.

Figure 54: SLR 8000 Base Station/Repeater Tuning Equipment Setup

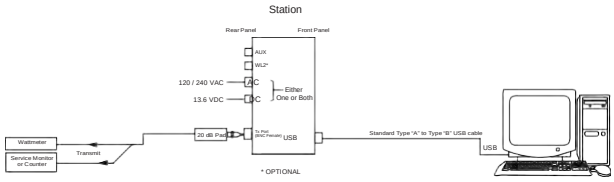

10.5

Tuning the Rx Audio Level Set

The procedure outlined in this section is used to set the receive output audio level from the SLR 8000 Base Station/Repeater for a given RF deviation of the received RF signal. Perform this procedure any time the Rx audio level needs adjustment.

Procedure:

1. Connect the base station/repeater's receiver antenna port to the Communication Analyzer.
2. Power the base station/repeater from either an AC or DC source.
3. Launch the Tuner application.
4. To read the softpot values, click **Read**.
5. Under the **RX** menu in the tree view, select **Rx Rated Volume**.

   Figure 55: Rx Menu tree (Rx Rated Volume)

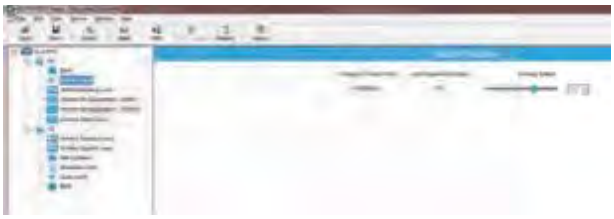

6. Set the Communication Analyzer to output a -47 dBm RF signal modulated with a 1 kHz tone at 60% of full deviation on the tuning frequency. The tuning frequency is the value displayed on the Tuner GUI under the heading of "Frequency Points".

   NOTICE:
   The Tuner aligns this parameter in a 12.5 kHz channel spacing, so 60% is 1.5 kHz of deviation. If the CPS is set for 25 kHz operation, the base station/repeater automatically scales the deviation by a factor of two when it is outside the Tuner application.

   Programmed TPL and DPL squelch requirements are automatically disabled for the tuning frequency while in the Tuner application.

7 Adjust the softpot value until the desired receive audio level is achieved at pin #7 (in reference to ground) on the Aux connector. Ground connections provided by the Aux connector are pins: 9, 16, 17, 18, and 19.

Figure 56: Auxiliary Connector

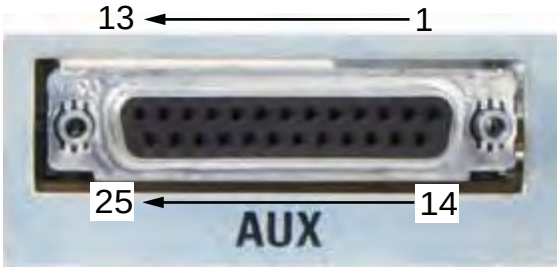

NOTICE: Optimally, it is recommended to load pin #7 with application loading used during normal operation of the base station/repeater.

8 To save the new tuned softpot value into the base station/repeater's codeplug, click **Write**.

10.6

Tuning the Tx Audio Level Set

Tuning the Tx audio level allows adjustment of the transmitter audio level the SLR 8000 Base Station/ Repeater is expecting at its Aux connector. Adjusting this level set has the effect of increasing or decreasing RF signal deviation for a given transmit audio level. Perform this procedure any time the transmitter audio level needs adjustment.

Procedure:

1 Connect the base station/repeater's transmitter antenna port to the Communication Analyzer.

2 Power the base station/repeater from either an AC or DC source.

3 Apply a 1 kHz signal at the desired input level to pin #1 or #22 (in reference to ground) on the Aux connector. Ground connections provided by the Aux connector are pins: 9, 16, 17, 18, and 19. See Figure 56: Auxiliary Connector on page 95.

NOTICE: Optimally, it is recommended to load pin #1 or #22 with the application source impedance used during normal operation of the base station/repeater.

4 Launch the Tuner application.

5 To read the softpot values, click **Read**.

6 Under the **TX** menu in the tree view, select **Tx Audio Level**.

Figure 57: Tx Menu Tree (Tx Audio Level)

7 Enter the tuning frequency into the Communication Analyzer (the value displayed on the Tuner GUI under the heading of "Frequency Points").

8 To key up the base station/repeater, click **PTT Toggle**.

9 Adjust the softpot value until 60% of the rated system deviation (RSD) is achieved.

NOTICE: The Tuner aligns this parameter in a 12.5 kHz channel spacing, so 60% is 1.5 kHz of deviation. If the CPS is set for 25 kHz operation, the base station/repeater automatically scales the deviation by a factor of two when it is outside the Tuner application.

10 To de-key the base station/repeater, click **PTT Toggle**.

11 To save the new tuned softpot value into the base station/repeater's codeplug, click **Write**.

10.7 Modulation Limit Alignment

Modulation is a change or alteration in the signal. Any aspect of the signal can be changed, such as amplitude, frequency, phase, timing or repetition rate of pulses. Aligning the modulation limit sets the RF carrier wave of the frequency bandwidth of the SLR 8000 Base Station/Repeater.

NOTICE: A modulation limit alignment is always required when the base station/repeater is in digital mode. This alignment is not required if the base station/repeater is used in repeat mode.

10.7.1 Tuning the Modulation Limit (with no Tx Data and no PL)

Prerequisites: If data or PL signaling is applied to Pin 13 of the Aux connector, proceed to Tuning the Modulation Limit (with Tx Data or PL) on page 98. Obtain the following:

- Wattmeter (Communication Analyzer)
- Service monitor or counter
- 20 dB pad
- Standard Type A to Type B USB cable
- Personal computer

Procedure:

1 Connect the base station/repeater antenna port to the attenuation pad, if necessary, before connecting to the Communication Analyzer.

2 Power the base station/repeater from either an AC or DC source.

3 Apply a 1 kHz signal at 1.2 Vrms to Pin 1 of the Aux connector.

Signal ground is Pin 9 of the Aux connector.

4 Launch the Tuner application.

5 To read the softpot values, click **Read**.

6 In the tree view, select **TX**, then select **Modulation Limit**.

Figure 58: TX Menu Tree (Tuning Procedure with No Tx Data)

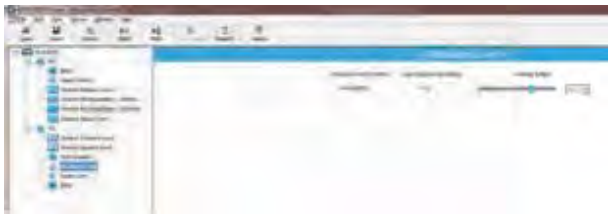

7 Enter the tuning frequency into the Communication Analyzer (the value displayed on the Tuner application).

8 To key up the repeater, click **PTT Toggle**.

9 Adjust the softpot value until the maximum deviation is 92% of the rated system deviation (RSD).

This adjustment is tested in a 12.5 kHz channel spacing, so 92% of 2.5 kHz is 2.3 kHz.

10 Set the modulation limit to 92% so that any additional deviation incurred by the transmitter VCOs over temperature is compensated for.

Channel Spacing (kHz)	RSD (kHz)	92% of RSD (kHz)	Tolerance (Hz)
12.5	2.5	2.3	+0/ -50

11 To de-key the repeater, click **PTT Toggle**.

12 To save the new tuned softpot value into the repeater codeplug, click **Write**.

10.7.2
Verifying the Modulation Limit (with no Tx Data and no PL)

Prerequisites: Obtain the following:

- Wattmeter (Communication Analyzer)
- Service monitor or counter
- 20 dB pad
- Standard Type A to Type B USB cable
- Personal computer

Procedure:

1 Connect the base station/repeater antenna port to the attenuation pad, if necessary, before connecting to the Communication Analyzer.

2 Power the base station/repeater from either an AC or DC source.

3 In CPS , program the base station/repeater with any frequency within the specified range of the repeater under test, and set the repeater for low power and disable the repeat path.

4 Apply a 1 kHz signal at 1.2 Vrms to Pin 1 of the Aux connector.

Signal ground is Pin 9 of the Aux connector.

5 Key up the base station/repeater by grounding Pin 2 of the Aux connector and measuring the deviation

NOTICE: CPS must have Pin 2 configured as an active low with the PTT function.

6 De-key the base station/repeater.

The deviation should meet the limits shown in the following table.

Channel Spacing (kHz)	Relative Standard Deviation (RSD) (kHz)	92% of RS (kHz)	Tolerance (Hz)
12.5	2.5	2.3	+0/-50
20.0	4.0	3.68	+0/-80
25.0	5.0	4.6	+0/-100

NOTICE:
- The repeater is factory-tuned in accordance to this procedure and specification.
- Verification is performed outside of the Tuner application, such as in normal mode.

10.7.3
Tuning the Modulation Limit (with Tx Data or PL)

Procedure:

1 Connect the base station/repeater's antenna port to the attenuation pad, if necessary, before connecting to the Communication Analyzer.

2 Turn on the base station/repeater using an AC or DC source.

3 Launch the Tuner application.

4 To read the softpot values, click **Read**

5 Under the **TX** menu in the tree view, select **Modulation Limit**.

6 Enter the tuning frequency into the Communication Analyzer (the value displayed by the Tuner application).

7 To key up the base station/repeater, click **PTT Toggle**.

8 Apply a 1 kHz signal at 1.2 Vrms to Pin 22 or Pin 1 of the J7 Aux connector.
- Signal ground is Pin 9 of the J7 Aux connector.

9 Adjust the Modulation Limit softpot to a value that limits the maximum deviation to "X"% RSD, where "X" is equal to "92% RSD" minus "Tx Data's % RSD".

If Tx Data deviation is equal to 17%,

X = 92% - 17% = 75% as the maximum deviation limit.

Figure 59: Example of Maximum Deviation Limit Calculation

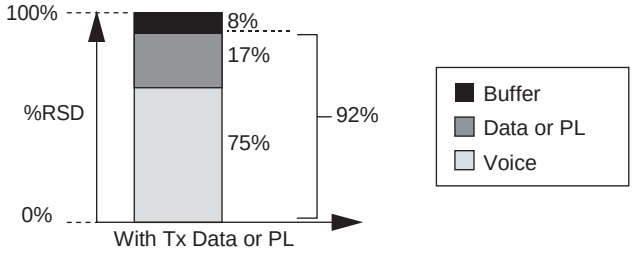

10 To de-key the base station/repeater, click **PTT Toggle** .

11 To save the newly tuned softpot value into the codeplug, click **Write**.

12 Alignment is complete.

NOTICE:

- See Figure 1 for details regarding the audio and data flow.
- Set the modulation limit to 92% to compensate for any additional deviation incurred by the transmitter VCOs over temperature.
- The Tuner application always aligns the Modulation Limit parameter in a 12.5 kHz channel spacing regardless of the CPS setting, so calculate the tuning % RSD accordingly. If the CPS is set for 25 kHz operation, the base station/repeater automatically scales the deviation by a factor of two when outside of the Tuner application.

10.7.4
Verifying the Modulation Limit (with Tx Data or PL)

See Verifying the Modulation Limit (with no Tx Data and no PL) on page 97 with the following exceptions:

- At step 4, additionally apply a TX Data signal which yields the same % RSD as was referenced in step 9 in Tuning the Modulation Limit (with Tx Data or PL) on page 98, to Pin 13 during the validation process.

10.8
Tuning the Wireline Receive Level

The procedure outlined in this section is used to set the output level on the Wireline/Aux board's Rx path for a given RF signal deviation on the received signal. Perform this procedure during initial Wireline installation or any time the Rx audio level needs adjustment.

Procedure:

1 Connect the radio's receiver antenna port to the Communication Analyzer.

2 Power the base station/repeater from either an AC or DC source.

3 Launch the Tuner application.

4 To read the softpot values, click **Read**.

5 Under the **RX** menu in the tree view, select **Wireline Receive Level**.

The following image provides graphical representation of the step.

Figure 60: Rx Menu tree (Wireline Receive Level)

6 Set the Communication Analyzer to output a -47 dBm RF signal modulated with a 1 kHz tone at 60% of full deviation on the tuning frequency. The tuning frequency is the value displayed in the Tuner application under the heading of **Frequency Points**.

NOTICE:
Programmed TPL and DPL squelch requirements are automatically disabled for the tuning frequency while in the Tuner application.

The Tuner aligns this parameter in a 12.5 kHz channel spacing, so 60% is 1.5 kHz of deviation. If the CPS is set for 25 kHz operation, the base station/repeater automatically scales the deviation by a factor of two when it is outside the Tuner application.

7 Adjust the softpot value until the desired receive audio level is achieved (-30 dBm to +7 dBm) across line two of the WL1 Wireline/Aux backplane connector terminals.

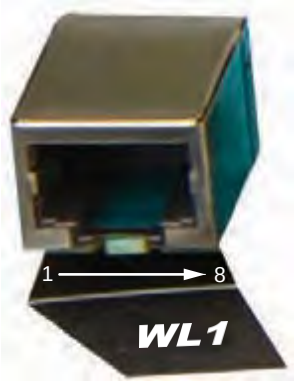

Location	Pin Assignment	Operation
1	Line 2+	2-wire or 4-wire
2	Line 2-	2-wire or 4-wire

NOTICE: It is imperative that the load the Wireline/Aux board is driving, matches that of the Wireline/Aux board's source impedance setting noted in the Tuner environment. Optimally, it is recommended to use the actual load which is used during normal operation of the radio.

8 Click "Write" to save the new tuned softpot value into the radio's codeplug.

10.9 Tuning the Wireline Rx Equalization – 2800 Hz

The Rx Equalization feature allows the frequency response adjustment of the Rx Audio relative to a specified rated system deviation, to compensate (equalize) for the response of the wireline backhaul network itself. This section outlines the procedure for high frequency adjustment. Perform this procedure only after Tuning the Wireline Receive Level.

The Rx Equalizer is adjusted relative to the response at 1 kHz. Note the 1 kHz response observed when performing the tuning procedure for Wireline Receive Level. Equalizer adjustments are approximate. Typical adjustments range from 0 dB to approximately +6 dB. See Tuning the Wireline Receive Level on page 99.

Procedure:

1. Connect the radio's receiver antenna port to the Communication Analyzer.
2. Power the base station/repeater from either an AC or DC source.
3. Launch the Tuner application.
4. To read the softpot values, click **Read**.
5. Under the **RX** menu in the tree view, select **Wireline Rx Equalization – 2800 Hz**.

   Figure 61: Rx Menu tree (Wireline Rx Equalization – 2800 Hz)

6. Set the Communication Analyzer to output a -47 dBm RF signal modulated with a 2800 Hz tone at 60% of full deviation on the tuning frequency. The tuning frequency is the value displayed in the Tuner application under the heading of **Frequency Points**.

   NOTICE:
   The Tuner aligns this parameter in a 12.5 kHz channel spacing, so 60% is 1.5 kHz of deviation. If the CPS is set for 25 kHz operation, the base station/repeater automatically scales the deviation by a factor of two when it is outside the Tuner application.

   The emphasis setting of the Communication Analyzer must be turned off for this alignment procedure.

   Programmed TPL and DPL squelch requirements are automatically disabled for the tuning frequency while in the Tuner application.

7. Adjust the softpot value until the best equalization is achieved across line two of the WL1 Wireline/Aux backplane connector terminals. Best equalization is achieved when the far side of the Wireline cable measures a flat response across the upper region of the audio spectrum. Compare the response at 2800 Hz with the response measured at 1000 Hz. The values should be approximately equal.

   NOTICE: It is imperative that the load the Wireline/Aux board is driving, matches that of the Wireline/Aux board's source impedance setting noted in the Tuner application. Optimally, it is recommended to use the actual load which is used during normal operation of the radio.

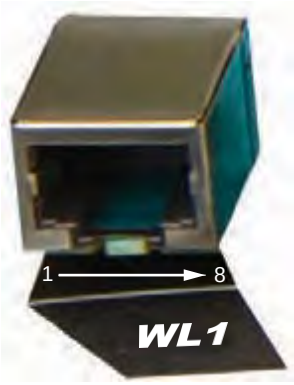

Location	Pin Assignment	Operation
1	Line 2+	2-wire or 4-wire
2	Line 2-	2-wire or 4-wire

8 To save the new tuned softpot value into the radio's codeplug, click **Write**.

10.10

Tuning the Wireline Rx Equalization – 400 Hz

The Rx Equalization feature allows the frequency response adjustment of the Rx Audio relative to a specified rated system deviation, to compensate (equalize) for the response of the Wireline backhaul network itself. This section outlines the procedure for low frequency adjustment. Perform this procedure only after Tuning the Wireline Receive Level.

The Rx Equalizer is adjusted relative to the response at 1 kHz. Note the 1 kHz response observed when performing the tuning procedure for Wireline Receive Level. Equalizer adjustments are approximate. Typical adjustments range from 0 dB to approximately +6 dB. See Tuning the Wireline Receive Level on page 99

Procedure:

1 Connect the radio's receiver antenna port to the Communication Analyzer.

2 Power the base station/repeater from either an AC or DC source.

3 Launch the Tuner application.

4 To read the softpot values, click **Read**.

5 Under the **RX** menu in the tree view, select **Wireline Rx Equalization – 400 Hz**.

Figure 62: Rx Menu tree (Wireline Rx Equalization – 400 Hz)

6 Set the Communication Analyzer to output a -47 dBm RF signal modulated with a 400 Hz tone at 60% of full deviation on the tuning frequency. The tuning frequency is the value displayed in the Tuner application under the heading of **Frequency Points**.

NOTICE:
The Tuner aligns this parameter in a 12.5 kHz channel spacing, so 60% is 1.5 kHz of deviation. If the CPS is set for 25 kHz operation, the base station/repeater automatically scales the deviation by a factor of two when it is outside the Tuner application.

The emphasis setting of the Communication Analyzer must be turned off for this alignment procedure.

Programmed TPL and DPL squelch requirements are automatically disabled for the tuning frequency while in the Tuner application.

7 Adjust the softpot value until the best equalization is achieved across line two of the WL1 Wireline/Aux backplane connector terminals. Best equalization is achieved when the far side of the Wireline cable measures a flat response across the lower region of the audio spectrum. Compare the response at 400Hz with the response measured at 1000 Hz. The values should be approximately equal.

NOTICE: It is imperative that the load the Wireline/Aux board is driving, matches that of the Wireline/Aux board's source impedance setting noted in the Tuner application. Optimally, use the actual load which is used during normal operation of the radio.

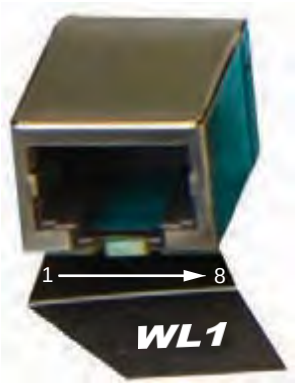

Location	Pin Assignment	Operationa
1	Line 2+	2-wire or 4-wire
2	Line 2-	2-wire or 4-wire

8 To save the new tuned softpot value into the radio's codeplug, click **Write**.

10.11 Tuning the Wireline Transmit Level

The procedure outlined in this section is used to adjust the level the Wireline is expecting on the Tx pair of the WL1 Wireline/Aux connector. Adjusting the expected level has the effect of increasing or decreasing RF signal deviation for a given Wireline Tx audio level. Perform this procedure during initial Wireline installation or any time the Tx audio level needs adjustment.

Procedure:

1 Connect the radio's transmitter antenna port to the Communication Analyzer.

2 Power the base station/repeater from either an AC or DC source.

3 Apply a 1 kHz signal at the desired input level (-36 dBm to +4 dBm) to the WL1 Wireline/Aux backplane connector terminals.

This signal is known as "Test Tone" and corresponds with the level of average voice. Optimally, it is recommended to use the actual source which is used during normal operation of the radio to provide the signal.

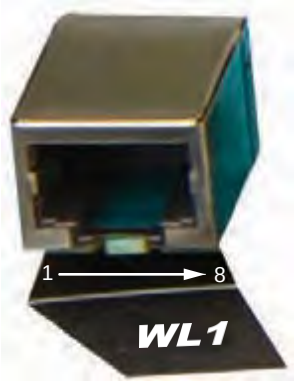

Location	Pin Assignment	Operation
1	Line 2+	2-wire
2	Line 2-	2-wire
4	Line 1-	4-wire
5	Line 1+	4-wire

NOTICE:
Most Motorola Solutions dispatch consoles can generate a 1 kHz tone at the correct level by using the "Alert Tone" feature. Consult the appropriate console manual for more information.

If the Wire Mode is set for 2-Wire operation, then inject the signal into the line two terminals of connector WL1. Otherwise, inject the signal into the line one terminals of WL1.

4 Launch the Tuner application and click the "Read" button to read the softpot values.

5 Under the **TX** menu in the tree view, select **Wireline Transmit Level**.

Figure 63: Tx Menu tree (Wireline Transmit Level)

6 Enter the tuning frequency into the Communication Analyzer (the value displayed on the Tuner application under the heading of **Frequency Points**).

7 To key up the radio, click **PTT Toggle**.

NOTICE: If enabled, the Wireline's Automatic Level Control (ALC) and Wireline Squelch Hysteresis features are automatically turned off when the radio is keyed up from within the Tuner application. The features are automatically re-enabled when the radio is de-keyed or when leaving the Tuner application.

8 Adjust the softpot value until 60% of the rated system deviation (RSD) is achieved.

NOTICE: The Tuner aligns this parameter in a 12.5 kHz channel spacing, so 60% is 1.5 kHz of deviation. If the CPS is set for 25 kHz operation, the base station/repeater automatically scales the deviation by a factor of two when it is outside the Tuner application.

9 To de-key the radio, click **PTT Toggle**.

10 To save the new tuned softpot value into the radio's codeplug, click **Write**.

10.12 Tuning the Wireline Squelch Level

The Wireline Squelch feature is used to mute Wireline Tx audio when the audio level falls below a designated threshold. The procedure in this section is used to set the nominal squelch threshold. An additional hysteresis value can be added to the nominal squelch threshold by adjusting the **Squelch Hysteresis** setting in the Wireline configuration options of the CPS tool.

NOTICE: This calibration procedure should be performed after adjusting the Wireline Transmit Level. See Tuning the Wireline Transmit Level on page 103.

The Wireline Squelch level is adjusted relative to the expected audio level for High Level Guard Tone. This is true regardless of the Remote Control method selected. The expected level of High Level Guard Tone is 6 dB above the "Test Tone" level used in Tuning the Wireline Transmit Level on page 103.

NOTICE: It is possible to set the Wireline Squelch threshold higher than the level of average voice. Setting the Squelch threshold too high can result in unintended audio drop-outs or no audio at all.

Procedure:

1 Connect the radio's transmitter antenna port to the Communication Analyzer.

2 Power the base station/repeater from either an AC or DC source.

3 Apply a 1 kHz signal, at the desired squelch threshold, to the WL1 Wireline/Aux backplane connector terminals. Optimally, it is recommended to use the actual source which is used during normal operation of the radio to provide the signal.

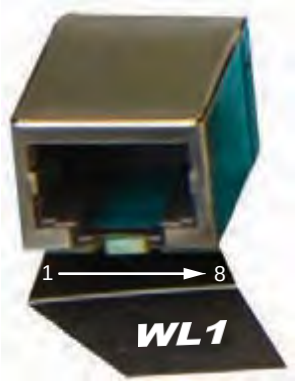

Location	Pin Assignment	Operation
1	Line 2+	2-wire
2	Line 2-	2-wire
4	Line 1-	4-wire
5	Line 1+	4-wire

NOTICE: If the Wire Mode is set for 2-Wire operation, then inject the signal into the line two terminals of connector WL1. Otherwise, inject the signal into the line one terminals of WL1. In addition, the Wire Mode used must be the same configuration as that was used in the Wireline Transmit Level alignment in Tuning the Wireline Transmit Level on page 103.

4 Launch the Tuner application.

5 To read the softpot values, click **Read**.

6 Under the **TX** menu in the tree view, select **Wireline Squelch Level**.

Figure 64: Tx Menu tree (Wireline Squelch Level)

7 Enter the tuning frequency into the Communication Analyzer (the value displayed on the Tuner application under the heading of **Frequency Points**).

8 To key up the radio, click the backplane **PTT Toggle**.

NOTICE:

- If enabled, the Wireline's Automatic Level Control (ALC) and Wireline Squelch Hysteresis features are automatically turned off when the radio is keyed up from within the Tuner application. The features are automatically re-enabled when the radio is de-keyed or when leaving the Tuner application.
- The Wireline's Automatic Level Control (ALC) alignment procedure can result in a difference between the Wireline Squelch Threshold set during this procedure and the actual value observed in normal operation. This difference can be eliminated or minimized, by carefully following the Wireline Transmit Level tuning procedure found in Tuning the Wireline Transmit Level on page 103 to obtain an accurate alignment.

9 Adjust the softpot value until the Communication Analyzer indicates that the deviation has dropped out (< 100 Hz of deviation).

10 To de-key the radio, click **PTT Toggle**.

11 To save the new tuned softpot value into the radio's codeplug, click **Write**.

10.13 Tuning the Wireline Status Tone Level (Analog Voting)

The procedure outlined in this section is used to set the status tone output level on the Wireline/Aux board’s Rx path. Perform this procedure during initial Wireline/Aux board installation or anytime the Wireline receive audio level needs adjustment.

NOTICE: This calibration procedure should be performed after adjusting the Wireline Receive Level. See Tuning the Wireline Receive Level on page 99.

Procedure:

1 Connect the radio's receiver antenna port to the Communication Analyzer.

2 Power the base station/repeater from either an AC or DC source.

3 Launch the Tuner application.

4 To read the softpot values, click **Read**.

5 Under the **RX** menu in the tree view, select **Wireline Status Tone Level**.

Figure 65: Rx Menu Tree (Wireline Status Tone Level)

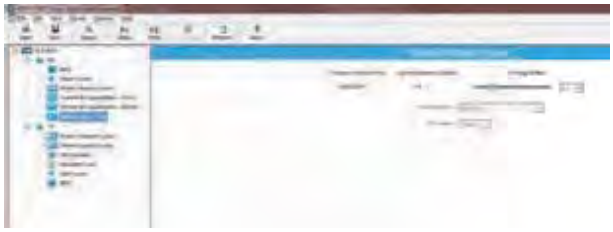

6 Set the Communication Analyzer to output a -47 dBm RF signal modulated with a 1 kHz tone at 100% of full deviation on the tuning frequency. The tuning frequency is the value displayed on the Tuner application under the heading of **Frequency Points**.

NOTICE:
The Tuner aligns this parameter in a 12.5 kHz channel spacing, so 100% is 2.5 kHz of deviation. If the CPS is set for 25 kHz operation, the base station/repeater automatically scales the deviation by a factor of two when it is outside the Tuner application.

Programmed TPL and DPL squelch requirements are automatically disabled for the tuning frequency while in the Tuner application.

7 Note the audio level that is yielded from step 6 and then remove the RF signal that was delivered to the base station/repeater in step 6. The status tone level is generated with the absence of the RF carrier.

8 Relative to the audio level noted in step 7, adjust the softpot value until the desired status tone level is achieved (0 to 20 dB below 100 % RSD) across line two of the WL1 Wireline/Aux backplane connector terminals.

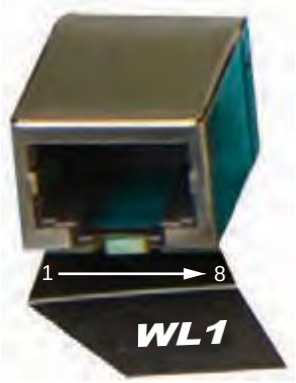

Location	Pin Assignment	Operation
1	Line 2+	2-wire or 4-wire
2	Line 2-	2-wire or 4-wire

NOTICE: It is imperative that the load the Wireline/Aux board is driving, matches that of the Wireline/Aux board's source impedance setting noted in the Tuner application. Optimally, it is recommended to use the actual load which is used during normal operation of the radio.

9 To save the new tuned softpot value into the radio's codeplug, click **Write**.

10.14 Changing to Battery Charger Only Mode

This feature allows you to change operation mode from "Normal Mode" to "Battery Charger Only" mode.

Prerequisites: Power the repeater from an AC source and connect the system to a laptop with USB cable. Run the MOTOTRBO Tuner application.

Procedure:

1. Connect the battery to the repeater's DC connector.
2. To read the softpot values, click **Read**.
3. Under the **Device Information** main menu, click **Battery Charger Only Mode**.

   The mode change procedure begins. When the mode change procedure is completed, the display shows `All functions other than the battery charger will be disabled. Do you wish to continue?`

4. Do one of the following:
   - Click **Yes**. The display shows `The Unit is in battery charger only mode. Please remove power for 15 seconds to exit.`
   - Click **No** to return to the main menu.

   Power off for 15 seconds to restore full system functionality. The system only detects and charges another battery after restoring full system functionality.

Chapter 11

SLR 8000 Maintenance and Disassembly/Reassembly

11.1 Introduction

This chapter provides details about the following:

- Routine maintenance
- Preventive maintenance (inspection and cleaning)
- Safe handling of CMOS and LDMOS devices
- Disassembly and reassembly of the base station/repeater

11.2 Routine Maintenance

The SLR 8000 Base Station/Repeater and ancillary equipment have been designed with state-of-the-art technology and operate under software control, thus requiring minimal routine maintenance.

The Modem and the firmware it runs monitors and self-corrects all base station/repeater operating parameters, making adjustments and tuning unnecessary.

If the equipment is installed in an area which meets the specified environmental requirements, the only routine maintenance task required is the calibration of the base station/repeater reference oscillator circuit.

11.3 Preventive Maintenance

Periodic visual inspection and cleaning is recommended.

11.3.1 Inspection

Check that the external surfaces of the SLR 8000 Base Station/Repeater are clean, and that all external controls and connections are in order. It is not recommended to inspect the interior electronic circuitry.

11.3.2 Cleaning Procedures

The following procedures describe the recommended cleaning agents and the methods to be used when cleaning the external and internal surfaces of the SLR 8000 Base Station/Repeater. External surfaces include the top cover and base station/repeater enclosure.

Periodically clean smudges and grime from exterior enclosure. Use a soft, non-abrasive cloth moistened in a 0.5% solution of mild dishwashing detergent and water solution. Rinse the surface using a second cloth moistened in clean water, and clean any dirt or debris from the fan grill and louvers on the front side.

NOTICE: Internal surfaces should be cleaned only when the base station/repeater is disassembled for service or repair.

The only factory recommended liquid for cleaning the printed circuit boards and their components is isopropyl alcohol (100% by volume).

Cleaning Internal Circuit Boards and Components

Isopropyl alcohol (100%) may be applied with a stiff, non-metallic, short-bristled brush to dislodge embedded or caked materials located in hard-to-reach areas. The brush stroke should direct the dislodged material out and away from the inside of the base station/repeater. Make sure that controls or tunable components are not soaked with alcohol. Do not use high-pressure air to hasten the drying process since this could cause the liquid to collect in unwanted places. Once the cleaning process is complete, use a soft, absorbent, lintless cloth to dry the area. Do not brush or apply any isopropyl alcohol to the top cover and base station/repeater enclosure.

NOTICE: Always use a fresh supply of alcohol and a clean container to prevent contamination by dissolved material (from previous usage).

11.4

Safe Handling of CMOS and LDMOS Devices

Complementary metal-oxide semiconductor (CMOS) and laterally diffused metal-oxide semiconductor (LDMOS) devices are used in this family of stations, and are susceptible to damage by electrostatic or high-voltage charges. Damage can be latent, resulting in failures occurring weeks or months later. Therefore, special precautions must be taken to prevent device damage when disassembling, troubleshooting, and repairing.

Handling precautions are mandatory for CMOS/LDMOS circuits and are especially important in low humidity conditions.

DO NOT attempt to disassemble the repeater without first referring to the following CAUTION statement.

CAUTION: This repeater contains static-sensitive devices. Do not open the repeater unless you are properly grounded. Take the following precautions when working on this unit:

- Store and transport all CMOS/LDMOS devices in conductive material so that all exposed leads are shorted together. Do not insert CMOS/LDMOS devices into conventional plastic "snow" trays used for storage and transportation of other semiconductor devices.
- Ground the working surface of the service bench to protect the CMOS/LDMOS device. Use the Motorola Solutions Static Protection Assembly (part number 0180386A82), which includes a wrist strap, two ground cords, a table mat, and a floor mat, ESD shoes and an ESD chair.
- Wear a conductive wrist strap in series with a 100k resistor to ground. (Replacement wrist straps that connect to the bench top covering are Motorola Solutions part number 4280385A59).
- Do not wear nylon clothing while handling CMOS/LDMOS devices.
- Do not insert or remove CMOS/LDMOS devices with power applied. Check all power supplies used for testing CMOS/LDMOS devices to be certain that there are no voltage transients present.
- When straightening CMOS/LDMOS pins, provide ground straps for the apparatus used.
- When soldering, use a grounded soldering iron.
- Handle CMOS/LDMOS devices by the package and not by the leads. Before touching the unit, touch an electrical ground to remove any static charge that you may have accumulated. The package and substrate may be electrically common. If so, the reaction of a discharge to the case would cause the same damage as touching the leads.

11.5 Disassembling and Reassembling the External Circulator Tray

Prerequisites:

NOTICE: For the correct procedure in handling static-sensitive parts, see Safe Handling of CMOS and LDMOS Devices on page 110.

Procedure:

1. Wear an electrostatic discharge (ESD) strap and connect its cable to a verified good ground. This strap must be worn throughout this procedure to prevent ESD damage to any components.
2. Turn off the DC breaker, and/or pull the AC source power cord from the back of the base station/repeater.
3. Remove the filter tray from the rack, as follows:
   a. Label and disconnect the RF input, RF output, and ground cables from the tray.

      NOTICE: Skip Step 3(b) for the UHF band.

   b. Disconnect the Circulator Load temperature cable at the inline connector (which disconnects it from the cable leading to the RF Peripherals port on the base station/repeater backplane interface board).
   c. Using a Torque Driver T30 bit, remove the two screws which secure the tray to the rack.
   d. Slide the tray out from the front of the rack.
4. If an individual External Dual Circulator module is replaced, perform the steps below. Otherwise, proceed to step 5.

a Label and disconnect the RF input and RF output cables from the External Dual Circulator module.

b Unscrew the connector that secures the Circulator Load to the External Dual Circulator module.

c Remove the screws that secure the circulator baseplate to the tray.

d Remove the circulator module including the circulator load module that extends beyond the baseplate.

e Place the new External Dual Circulator module in the tray in the same location and orientation as the module which will be replaced.

f Secure the new External Dual Circulator module baseplate to the tray using the screws previously removed.

g Connect the RF input and RF output cables to the new External Dual Circulator module.

h Connect the Circulator Load to the External Dual Circulator module.

5 If an individual Circulator Load is replaced, perform the steps below. Otherwise, proceed to step 6.

a Unscrew the connector that secures the Circulator Load to the External Dual Circulator module.

b Remove the Circulator Load module.

c Place the new Circulator Load module on the tray in the same position and orientation as the module which will be removed.

d Secure the new Circulator Load to the External Dual Circulator module by tightening the connector.

e Connect the Circulator load cable to the RF Peripherals port on the base station/repeater backplane interface board.

NOTICE: Skip Step 5(e) for the UHF band.

6 If an individual Low Pass/Harmonic Filter module is replaced, perform the steps below. Otherwise, proceed to step 7.

a Label and disconnect the RF input and RF output cables from the Low Pass/Harmonic Filter module.

b Pull up firmly to release the Low Pass Filter module from the two semi-circular clips holding it in place.

c Insert the new Low Pass Filter module into the semi-circular clips using the same orientation as the module which will be replaced.

d Connect the RF input and RF output cables to the new Low Pass/Harmonic Filter module.

7 If the entire tray including all of its modules are replaced, install the replacement tray in the rack.

8 Turn on the DC breaker, and/or connect the AC source power cord to the back of the base station/repeater.

9 Verify that the base station/repeater is operating properly using Customer Programming Software (CPS).

CAUTION: Shock Hazard. The SLR 8000 Base Station/Repeater contains voltages which can cause damage to the base station/repeater or other equipment if a short circuit occurred. Turn off the DC breaker, and/or pull the AC source power cord from the back of the base station/repeater when servicing this component in the base station/repeater.

11.6 Disassembly

Station modules suspected of being faulty must be replaced with new modules to restore the base station/repeater to proper operation. The following are typical procedures to remove each of the base station/repeater modules.

CAUTION: Power cord (and battery backup power, if used) and all external cables must be disconnected before opening up the base station/repeater.

Procedure:

1. Label each removed cable as required to ensure it is properly reconnected.
2. Take the proper grounding precautions as stated in Safe Handling of CMOS and LDMOS Devices on page 110.
3. When disassembling base station/repeater, retain all screws for reuse.

   The following tools are required for disassembling and reassembling the base station/repeater:

   - Torque Drivers (T10, T15, T20, and T30)
   - Hex Nut Drivers (8 mm, 16 mm, and 0.75 in.)
   - Needle Nose Pliers (optional)
   - Torque Gauge capable of measuring torque up to 20 lb-in within ±1 lb-in

   If a unit requires more complete testing or service than is customarily performed at the basic level, send the base station/repeater or FRU to a Motorola Solutions Service Center.

11.6.1 Removing the Covers

Procedure:

1. Remove the ten screws securing the bottom cover with a T10 Torx driver.
2. Detach the bottom cover.

   The following figure shows the graphical representation of the step.

   Figure 66: Removing Bottom Cover from Base Station/Repeater

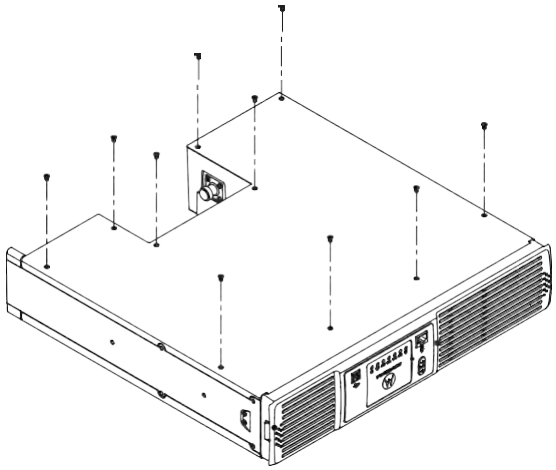

3. Remove the screw securing the top cover with a T15 Torx driver.

   The following figure shows the graphical representation of the step.

Figure 67: Removing Top Cover from Base Station/Repeater

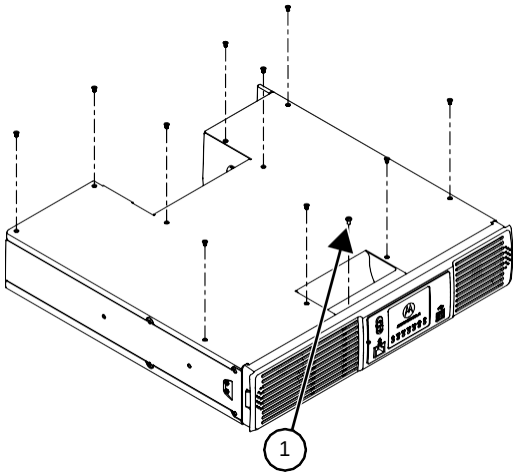

Table 42: Callout Legend

Label	Description
1	Use Torx T15 Driver For This Screw

4 Remove the remaining ten screws securing the top cover with a T10 Torx driver.

5 Detach the top cover.

11.6.2
Removing the Front Bezel

Procedure:

1 Place one hand on each side flange of the front bezel.

2 Pull front bezel away from the base station/repeater to disengage from the locking clips.

Figure 68: Removing Front Bezel from Base Station/Repeater

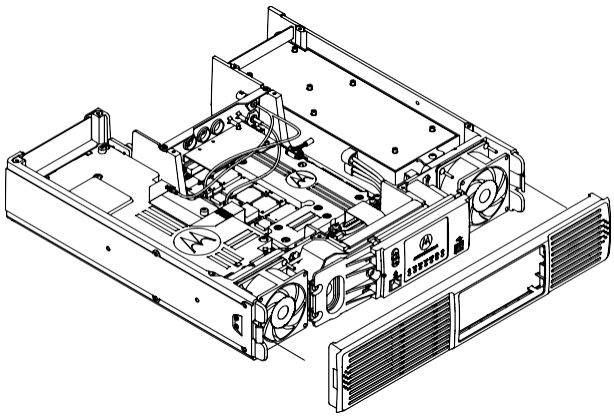

11.6.3
Removing the Faceplate

Procedure:

1. Disengage the flex cable from the Modem that connects to the faceplate.

   Figure 69: Disconnecting Flex Cable from Modem

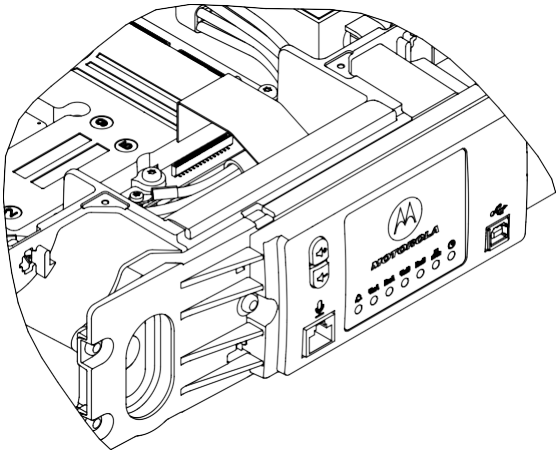

2. Remove the four screws securing the faceplate to the repeater frame with a T20 Torx driver. Remove the faceplate assembly from the unit. Do not attempt to remove the thermal pad from the frame.

   Figure 70: Removing Faceplate from Base Station/Repeater Frame

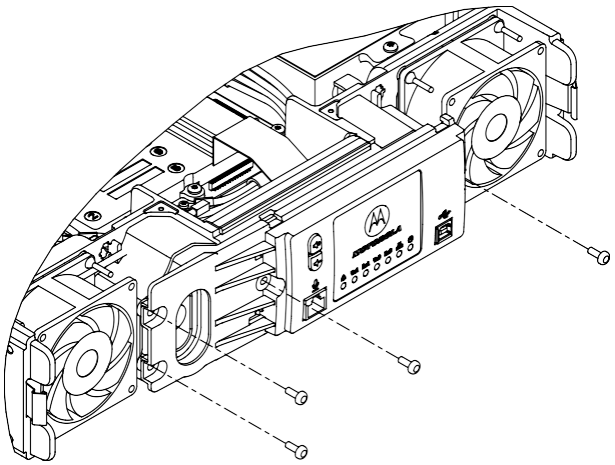

11.6.4
Disassembling the Faceplate

Procedure:

1. Disconnect the speaker cable from the connector on the PCB. Pull the speaker boot assembly out of the faceplate.
2. Remove the six screws securing the PCB to the faceplate with a T10 Torx driver and remove the PCB from the faceplate.

3 Pull the keypad out of the faceplate.

11.6.5 Removing the Fan Module

Prerequisites:

NOTICE: If replacing the fans only, it is not necessary to remove the base station/repeater from the rack or remove either of the covers. However, please ensure that the power cord and all external cables are disconnected per Disassembly on page 113 and the front bezel is removed per Removing the Front Bezel on page 114.

Procedure:

1. Disengage the cable from the Power Amplifier fan and its connection.
2. Disengage the cable from the Power Supply fan and its connection.
3. Disengage the latch on the fan clip by putting a flathead screwdriver through the gaps in the fan blades.

Figure 71: Disengaging Latch on Fan Clip

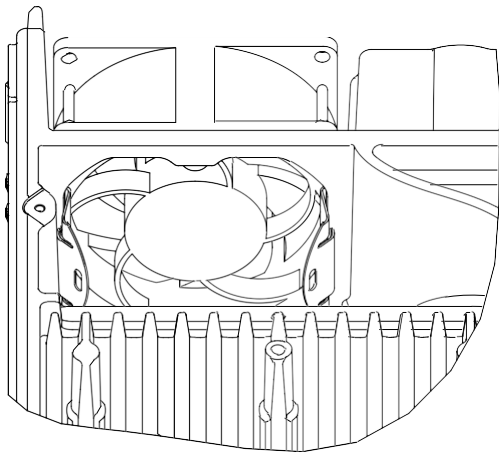

11.6.6 Removing the Bezel Clip

Procedure:

Remove the two screws from each of the two bezel clips with a T10 Torx driver.

Figure 72: Removing Screws from Bezel Clip

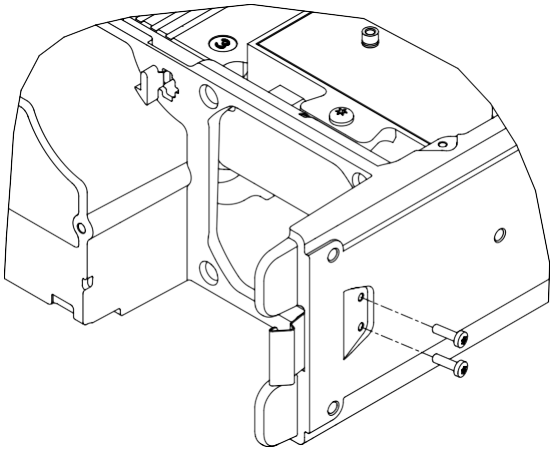

11.6.7

Disconnecting the Cables

Prerequisites:

NOTICE: When disengaging flexible cables, pull parallel to the insertion direction of the cable to avoid damaging the cables.

Procedure:

1. Remove the flex cable that connects the Power Amplifier module to the Modem module by pulling out of the connectors.
2. Remove the RF cable that connects the Power Amplifier module to the Modem module.
3. Disconnect the RX Input cable from the Modem.
4. Disconnect the RX Reference cable from the Modem.
5. Disconnect the 15-pin connector from the Modem.
6. Disconnect the Chassis ID cable from the Modem.

   CAUTION: DO NOT attempt to remove the Chassis ID flex from the chassis. DAMAGE will occur.
7. Unscrew the power lug from the Power Amplifier module with a T10 Torx driver.
8. Unscrew the ground lug from the Power Amplifier module with a T10 Torx driver.
9. Unscrew the power lug from the Modem with a T10 Torx driver.
10. Unscrew the ground lug from the Modem with a T10 Torx driver.
11. Disengage the fan jumper cable near the Power Amplifier module from the chassis.
12. Disengage the fan jumper cable near the Power Supply module from the chassis.
13. Remove the screw for each of the cable clamps securing the cables from the Power Supply module with a T20 Torx driver. Remove the cable clamps.

Figure 73: Removing Cables

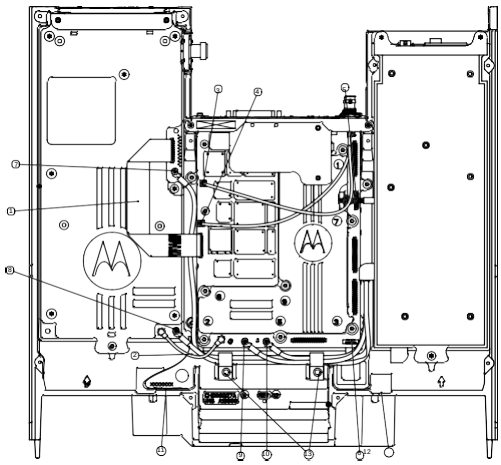

11.6.8

Removing the Power Supply Module

Prerequisites:

NOTICE: Ensure all connections from the Power Supply to various parts of the repeater have been detached.

Procedure:

1. Remove the three screws securing the Power Supply module to the base station/repeater frame with a T20 Torx driver.
2. Remove the Power Supply module and back plate from the base station/repeater.

   Figure 74: Removing Power Supply Module

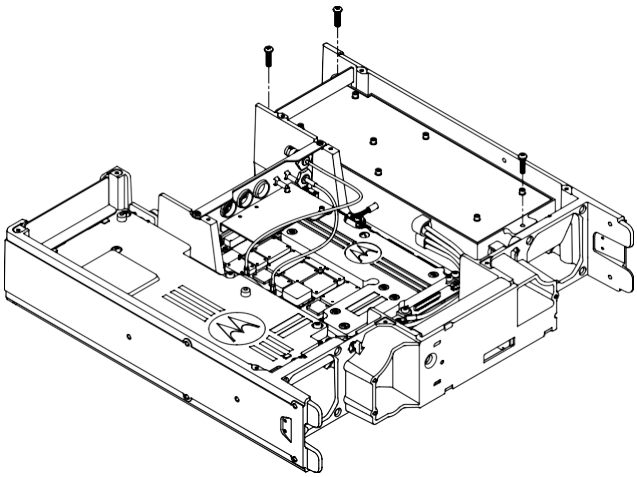

11.6.9

Removing the Modem Module

Prerequisites: Ensure all connections from the Power Supply to various parts of the repeater have been detached.

Procedure:

1. Remove the four screws securing the Modem module to the base station/repeater frame with a T20 Torx driver.
2. Remove the Modem module and Modem Gasket seal from the base station/repeater.

   Figure 75: Removing Modem Module

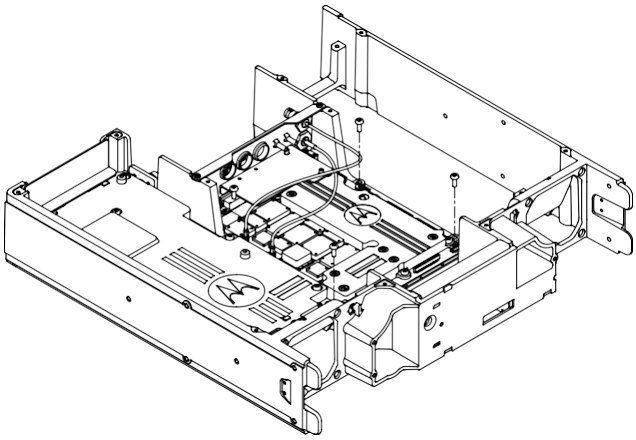

11.6.10
Removing the Power Amplifier Module

Prerequisites:

NOTICE: Ensure all connections from the Power Supply to various parts of the repeater have been detached.

Procedure:

1. Remove the three screws securing the Power Amplifier module to the base station/repeater frame with a T20 Torx driver.

   Figure 76: Removing Power Amplifier

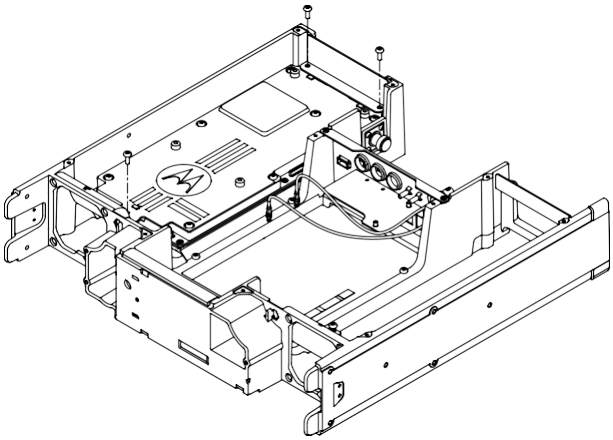

2. Remove the Power Amplifier module and back plate from the base station/repeater.

11.6.11
Removing the Back Panel

Procedure:

1. Using a 16 mm hex nut driver, remove the two nuts securing the RX and Reference BNC cables to the back panel.
2. Remove the two corresponding lock washers and both cables.
3. Using a T10 Torx driver, remove the four screws securing the back panel to the base station/repeater frame.
4. Remove the back panel from the base station/repeater.

11.7
Reassembly

The following are typical procedures to reassemble each of the base station/repeater modules.

11.7.1
Replacing the Bottom Cover

Procedure:

Instal the ten flathead M3 x 6 mm screws each (PN: 0310913B41) to 10 lb-in using a T10 Torx driver in the locations as shown in the following figure to secure the bottom cover to the base station/repeater chassis.

Figure 77: Securing Bottom Cover to Base Station/Repeater

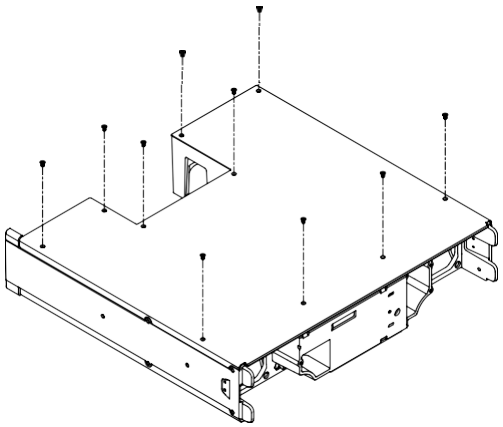

11.7.2
Replacing the Power Amplifier Module (for Base Station/Repeater without Preselector Module)

For a base station/repeater without a Preselector Module, perform the following steps.

Procedure:

1. Connect the Power Amplifier to Modem flex cable (PN: CB000057A01) into the connector on the Power Amplifier module.

   See the following figure for orientation.

Figure 78: Installing the Power Amplifier Module

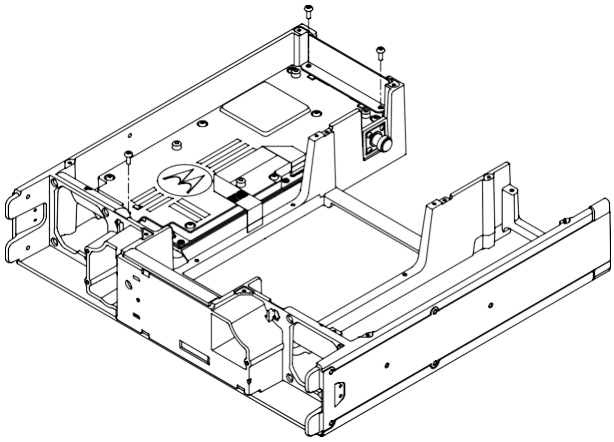

2 Place the Power Amplifier module (PN: PMTE4000_) into the chassis using the grip points at the ends to lower into place.

3 Place the Power Amplifier back panel (PN: EN000020A01) into place at the rear of the base station/repeater. See Figure 78: Installing the Power Amplifier Module on page 121 for reference.

4 Using a T20 Torx driver, install two M4 x 16 mm screws (PN: 0371274L02) through the back panel clearance holes into the mounting points on the Power Amplifier module to 15 lb-in.

5 Install a third M4 x 16 mm screw (PN: 0371274L02) at the mounting location at the other end of the module to 15 lb-in.

11.7.3
Replacing the Power Amplifier Module (for Base Station Repeater with Preselector Module)

For a base station/repeater with a Preselector Module, perform the following steps:

Procedure:

1 Connect the Power Amplifier to Modem flex cable (PN: CB000057A01) into the connector on the Power Amplifier module. See the following figure for orientation.

Figure 79: Installing the Power Amplifier Module and Preselector Module

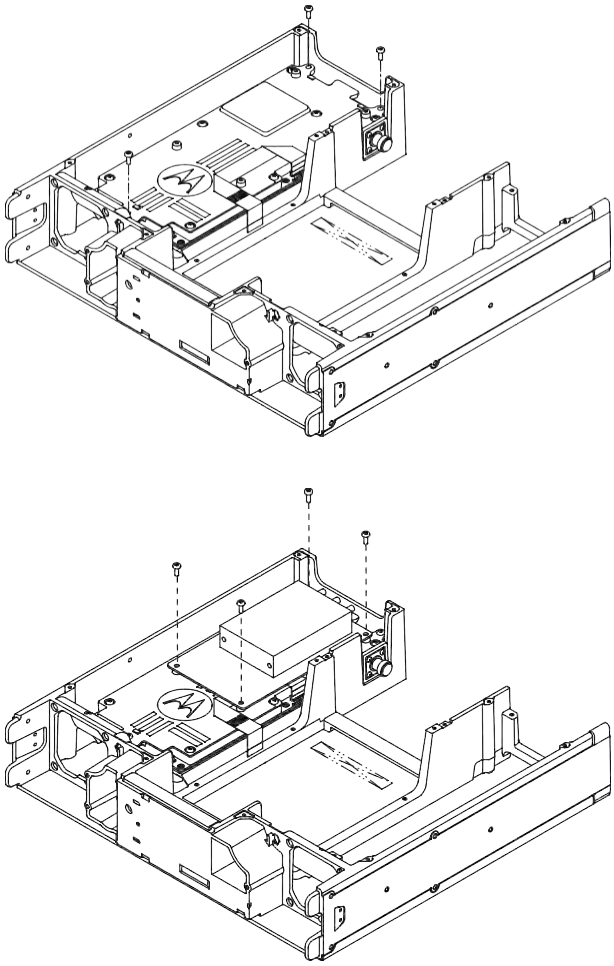

2 Place the Power Amplifier module (PN: PMTE4000_) into the chassis using the grip points at the ends to lower into place.

3 Using a T20 Torx driver, install two M4 x 16 mm screws (PN: 0371274L02) through the back panel clearance holes into the mounting points on the Power Amplifier module to 15 lb-in.

4 Install a third M4 x 16 mm screw (PN: 0371274L02) at the mounting location at the other end of the module to 15 lb-in.

5 Place the Preselector Module onto place on top of the Power Amplifier Module.

6 Using a T20 Torx driver, install four screws (PN: 0310909A59) into place to 15 lb-in.

11.7.4
Replacing the Modem Module

Procedure:

1 Secure the Modem Gasket seal (PN: SL000100A01) onto the chassis.

Figure 80: Securing Modem Gasket Seal

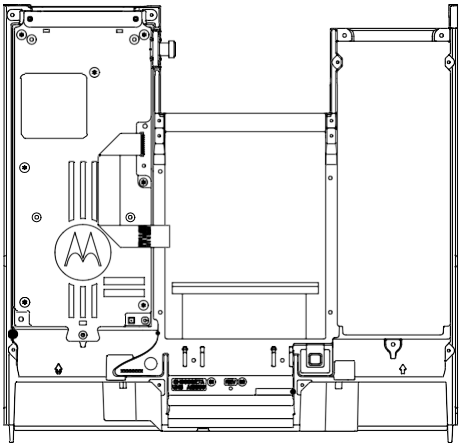

2 Lift the Chassis ID cable out of the way.

CAUTION: DO NOT ATTEMPT TO REMOVE THE CABLE. DAMAGE WILL OCCUR.

3 Place the Modem (PN: PMTE4032_) onto the chassis.

4 Using a T20 Torx driver, install the four M4 x 16 mm screws (PN: 0371274L02) and tighten to 15 lb-in.

Figure 81: Securing Modem to Base Station/Repeater Chassis

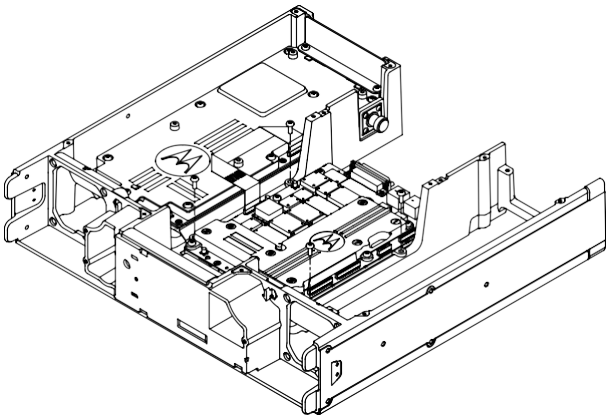

11.7.5

Replacing the Power Supply (for Base Station/Repeater without Wireline Card)

For a base station/repeater without a Wireline Card:

Procedure:

1 Place the Power Supply module (PN: PMPN4053_) into the chassis.

2 Place the Power Supply back panel (PN: EN000035A01) into place at the rear of the base station/repeater. See the following figure for reference.

3 Using a T20 Torx driver, install two M4 x 16 mm screws (PN: 0371274L02) through the back panel clearance holes into the mounting points on the Power Supply module to 15 lb-in.

4 Install a third M4 x 16 mm screw (PN: 0371274L02) at the mounting location at the other end of the module to 15 lb-in.

Figure 82: Securing Power Supply to Base Station/Repeater Chassis

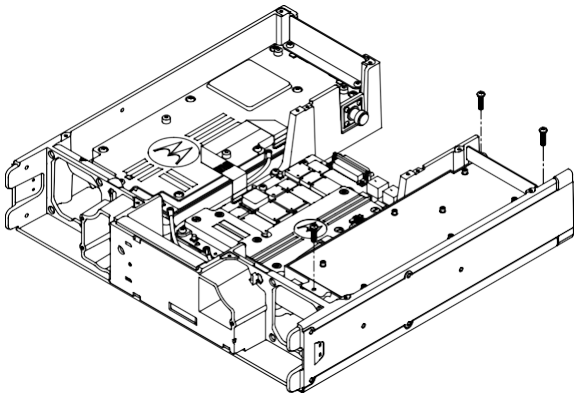

11.7.6

Replacing the Power Supply (for Base Station/Repeater with Wireline Card)

This is an optional procedure. For a base station/repeater with a wireline card, perform the following.

Procedure:

1 Place the Power Supply module (PN: PMPN4053_) into the chassis.

2 Using a T20 Torx driver, install two M4 x 16 mm screws (PN: 0371274L02) through the back panel clearance holes into the mounting points on the Power Supply module to 15 lb-in.

3 Install a third M4 x 16 mm screw (PN: 0371274L02) at the mounting location at the other end of the module to 15 lb-in.

4 Place the Wireline card onto the Power Supply Module. Using a T15 Torx driver, install seven M3.5 screws (PN: 0310909A45) into place as shown in the following figures.

Figure 83: Securing Power Supply with Wireline Card to Base Station/Repeater Chassis

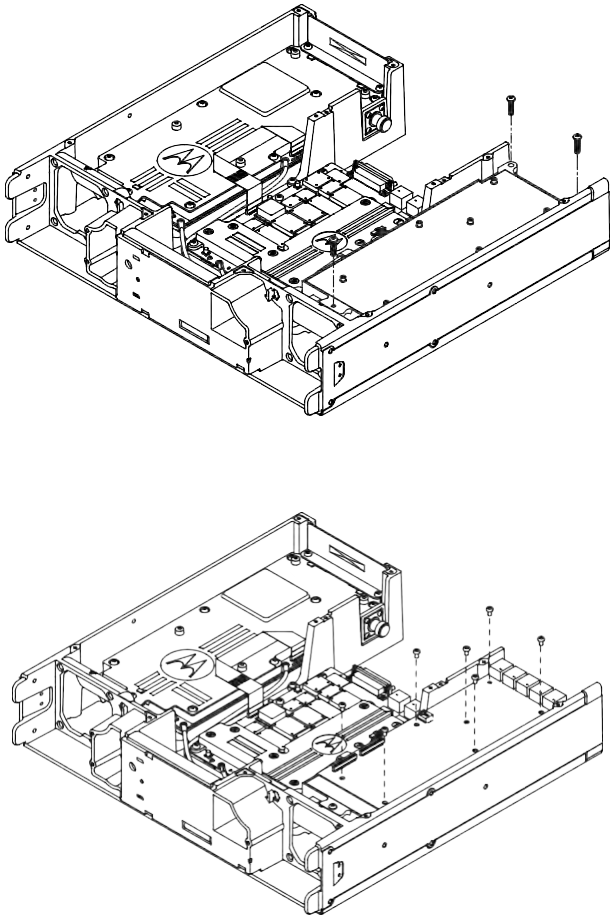

11.7.7
Replacing the Back Panel

Procedure:

1. Place the back panel (PN: EN000019A01) onto chassis.
2. Hold the top corners to ensure the back panel seats flat.
3. Using a T10 Torx driver, install four M3 x 6 mm screws (PN: 0310907A18) to 10 lb-in.

Figure 84: Securing Back Panel to Base Station/Repeater

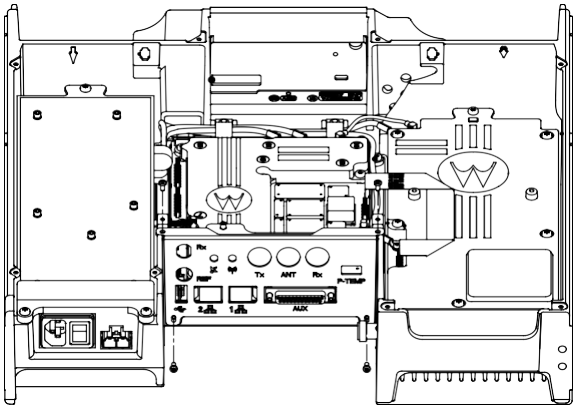

11.7.8
OPTIONAL - Replacing the Antenna Relay

For a base station/repeater with an Antenna Relay Module.

Procedure:

1 Place the Antenna Relay module onto the back panel as shown in the following figure.

Figure 85: Securing Antenna Relay Module

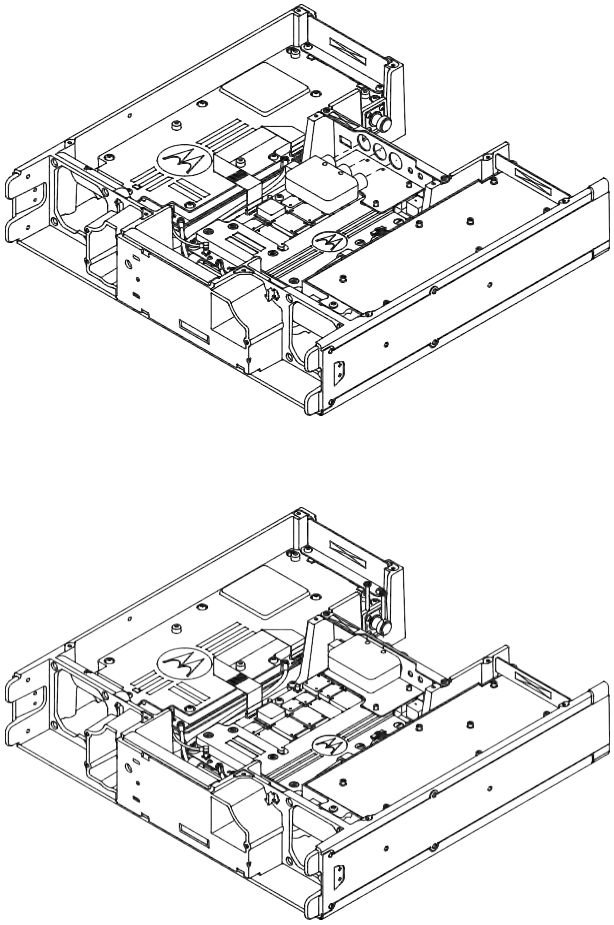

2 Using a T10 Torx driver, install two M3 screws (PN: 0310909A54) into place.

11.7.9
Replacing the Receive Cable

Procedure:

1. Assemble the BNC to MCX coax cables (PNs: CB000058A01 and CB000164A01) intothe corresponding holes in the back panel.
2. Install the washer and nuts. Using a 16 mm hex nut driver, tighten to 15 lb-in.

Figure 86: Installing RX Cables

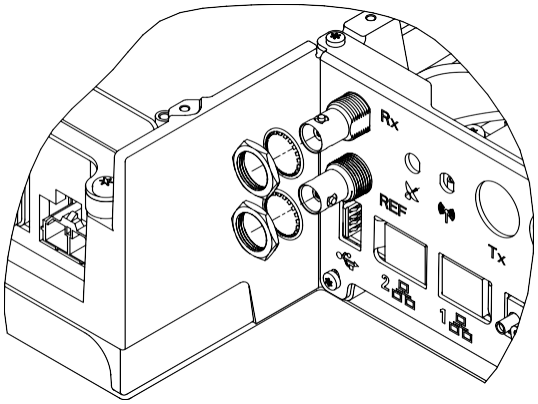

11.7.10

Replacing the Faceplate

Procedure:

1. Install the Front Panel to Modem Flex cable (PN: 84007002001) into the connector on the Faceplate assembly.
2. Ensure the cable is fully seated and installed straight.

   Figure 87: Installing Front Panel to Modem Flex Cable

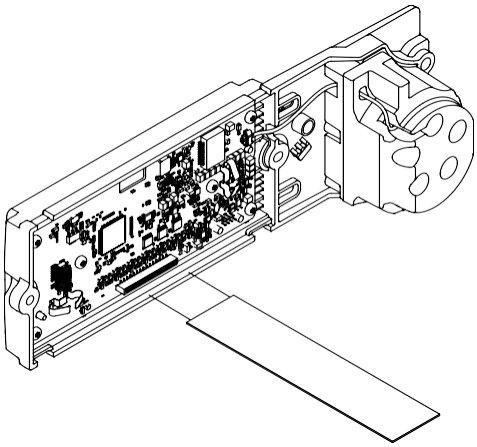

3. Place the Faceplate (Kit Number: PMLN6822_) onto the front of the base station/repeater using the alignment pins to guide into place.

Figure 88: Aligning Faceplate to Front of Base Station/Repeater

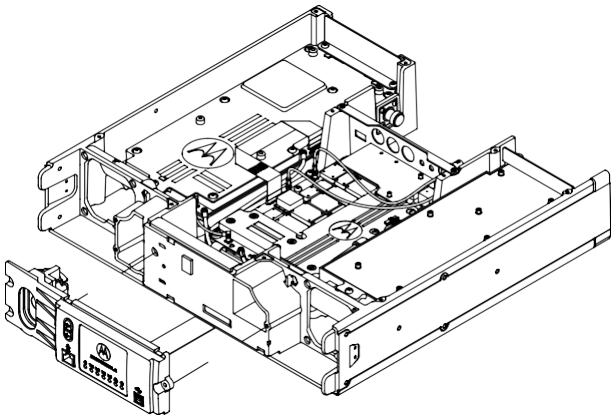

4 Using a T20 Torx driver, install the four M4 x 10 mm screws (PN: 0310909A61) to 15 lb-in in the order shown in the following figure.

Figure 89: Securing Faceplate to Base Station/Repeater

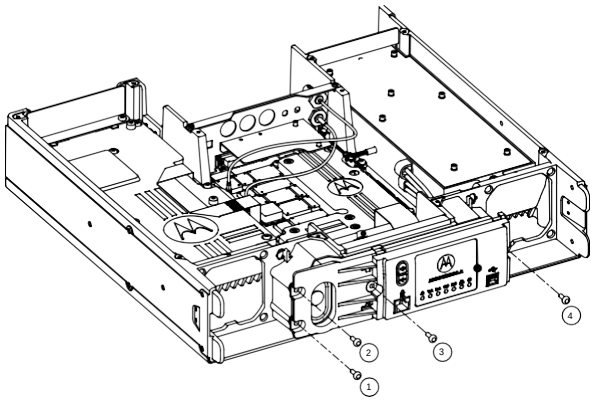

11.7.11

Replacing the Cables

Prerequisites:

CAUTION: DO NOT over torque the power screws as damage may occur.

NOTICE: Refer to Figure 90: Cable Installation on page 130 for corresponding locations.

Procedure:

1 Install the two power screws from the Power Supply Module into the Power Amplifier board at location 1. Tighten to 6.5 lb-in using a T10 Torx driver.

2 Install the two power screws from the Power Supply Module into the Modem board at location 2. Tighten to 6.5 lb-in using a T10 Torx driver.

3 Snap the Power Amplifier Fan cable connector into the chassis at location 3.

4 Snap the Power Supply cable connector into the chassis at location 4.

5 Place the Power Amplifier, Modem and Power Amplifier Fan cables into the cable clamp (PN: 42009306002) and using a M4 x 10 mm screw (PN: 0310909A61) drive clamp into location 5. Tighten to 15 lb-in using a T20 Torx driver.

6 Place the Power Amplifier and Power Amplifier Fan cables into the cable clamp (PN: 42009306002) and using a M4 x 10 mm screw (PN: 0310909A61) drive clamp into location 6. Tighten to 15 lb-in using a T20 Torx driver.

7 Connect the Front Panel to Modem flex into the Modem at location 7.

8 Connect the Chassis ID flex to the Modem at location 8.

CAUTION: WARNING: DO NOT ATTEMPT TO REMOVE THE CHASSIS ID FLEX FROM THE CHASSIS. DAMAGE WILL OCCUR.

9 Connect the signal cable from the Power Supply to the Modem at location 9.

10 Connect the Power Amplifier to Modem coax cable (PN: CB000419A01) to the Power Amplifier board and Modem board in location 11.

11 Connect the Rx input coax cable to location 12 on the Modem.

12 Connect the Rx reference coax cable to location 12 on the Modem.

13 Snap the Fan cable connectors into the chassis in locations 13.

Figure 90: Cable Installation

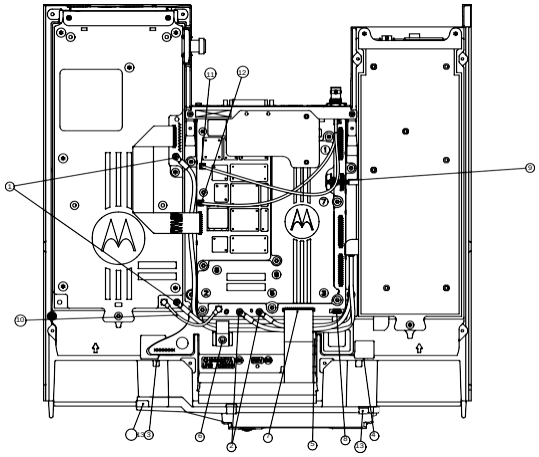

OPTIONAL - Option Cable Installation

14 If using Wireline Card, install the two flex cables (PN: CB000057A03) from the Modem to the Wireline Card in locations shown in the following figure.

15 If using Preselector Module, connect the Rx input cable into the location on the Preselector as shown in the following figure.

Use the cable (PN: CB000059A01) which is included, to connect from the Preselector to the Modem as shown in the following figure.

16 If using Antenna Relay, connect the cable (PN: CB000062A01) from the Wireline Card to the Antenna Relay as shown in the following figure. Snap the remaining connector on cable CB000062A01 into the back panel location.

Figure 91: Option Cable Installation

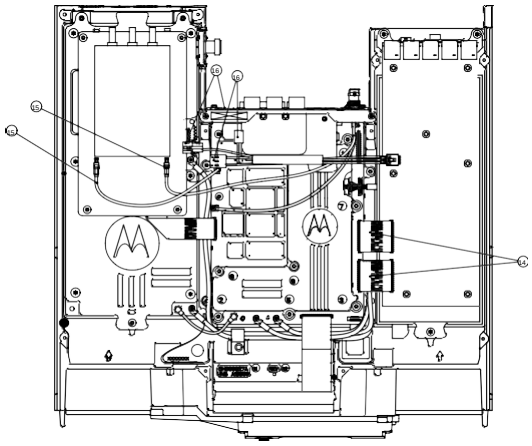

11.7.12
Replacing the Bezel Clip

Procedure:

1. Place the Bezel clip (PN: BR000050A01) in the location and orientation as shown in the following figure.
2. Install two M3 x 10 mm screws (PN: 0310907A20) through the chassis into the clip nut and tighten to 10 lb-in using a T10 Torx driver.
3. Repeat the process for the second Bezel clip on the opposite side of the base station/repeater.

   Figure 92: Installing Bezel Clip

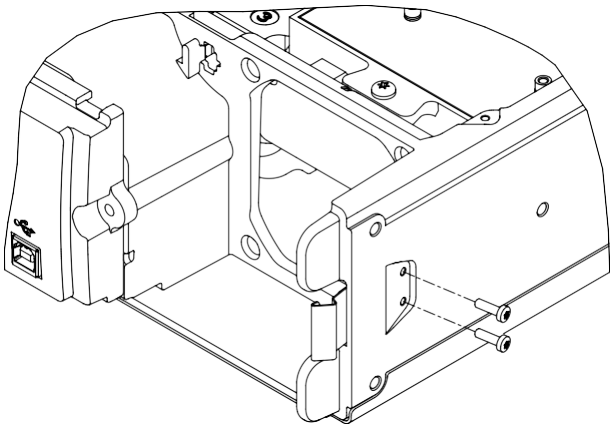

11.7.13
Replacing the Fan

Procedure:

1. For each of the two fan clips (PN: BR000141A01) pull the four rubber isolators (PN: HW000743A01) through the fan clips to position as shown in the following figure.

2 Once all four rubber isolators are pulled through the fan clips, pull the rubber isolators through the fans (PN: MR121971A02), orienting the fans such that the wires are in line with the printed text "wires" on the fan clip.

3 Ensure the blowing direction is correct.

Figure 93: Securing and Positioning the Rubber Isolators

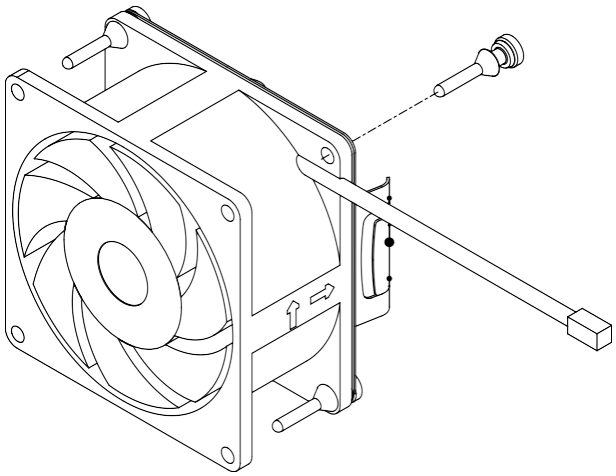

4 Orient the fan on the left as shown in the following figure and push into place until a click is heard and the fan clip is secured into the base station/repeater.

5 Orient the fan on the right 180 degrees counterclockwise such that the cable is facing the left and the veritical arrow is pointing downwards. Push the fan into place until a click is heard and the fan clip is secured into the base station/repeater.

6 Connect the fan cable to the jumper cable that is mounted into the chassis.

Figure 94: Installing Fan

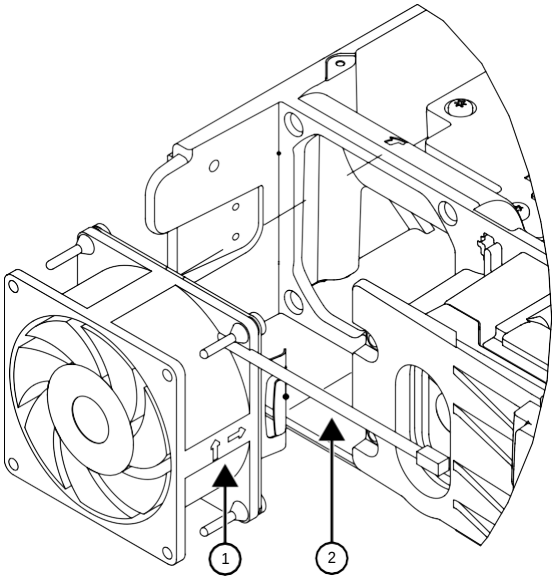

Table 43: Callout Legend

Label	Description
1	Vertical Arrow
2	Cable

11.7.14

Installing the Option Plugs

Procedure:

1. For models without the Expansion Board, install two Expansion Board plugs (PN: 3287533V01) into the holes as shown in the following figure.

   Figure 95: Installing Expansion Board Plugs

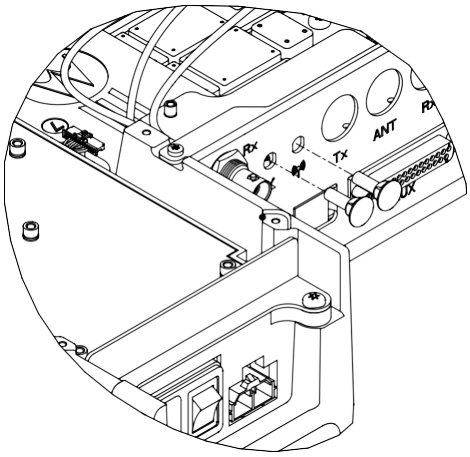

2. For models without the Antenna Relay, install the Antenna Relay plug and Brown Wire plug onto the back panel of the base station/repeater.

Figure 96: Installing Antenna Relay and Brown Wire Plugs

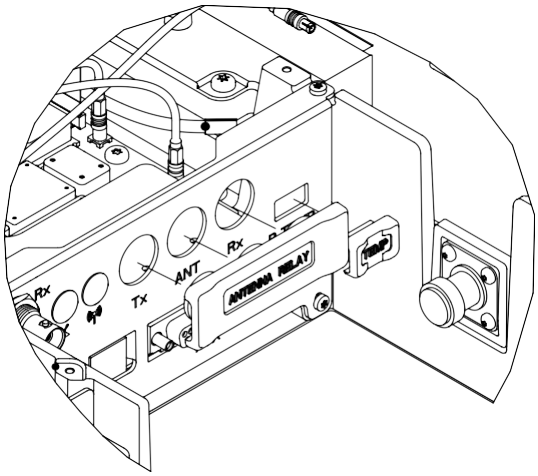

11.7.15 Replacing the Covers

Procedure:

1. Replace the top cover by installing one M3.5 x 6 mm screw (PN: 0310909A45) into the location indicated in the following figure.
2. Tighten to 10 lb-in using a T15 Torx driver.
3. Install ten flathead M3 x 6 mm screws (PN: 0310913B41).
4. Tighten to 10 lb-in using a T10 Torx driver.

   Figure 97: Installing Top Cover

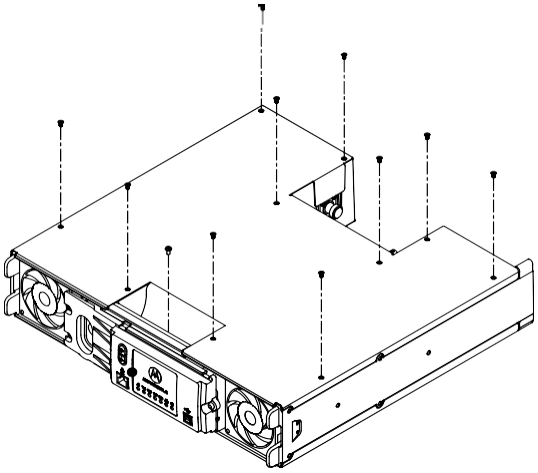

5. Replace the bottom cover by installing ten flathead M3 x 6 mm screws (PN: 0310913B41).
6. Tighten to 10 lb-in using a T10 Torx driver.

   The following figure shows the graphical representation of the step.

Figure 98: Installing Bottom Cover

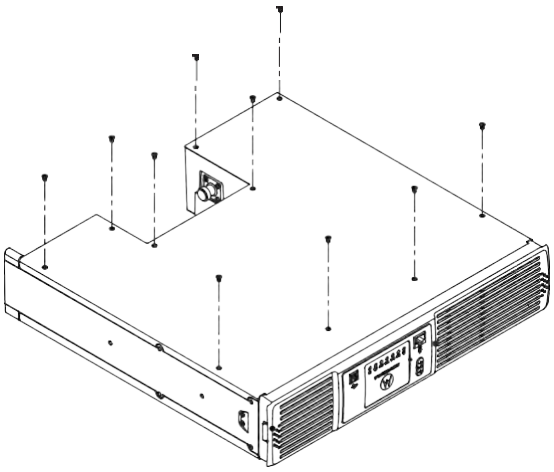

11.7.16

Replacing the Front Bezel

Procedure:

1. Orient the Front Bezel (PN: EN000018A01) as shown in the following figure.
2. Press onto bezel clips.
3. Bezel will snap into place and secured.

Figure 99: Securing Front Bezel

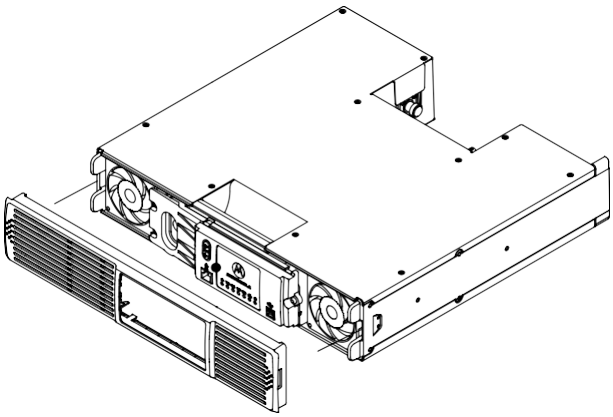

11.8

Exploded Mechanical View

Figure 100: SLR 8000 Assembly Exploded View

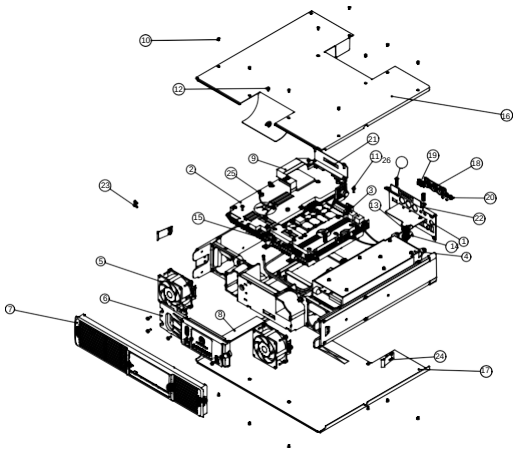

11.9

Parts List

Table 44: SLR 8000 Exploded View Parts List

Item No.	Description	Part Number	Quantity
1	Back Plate	EN000019A01	1
2	PA FRU	See Table 45: FRU Part Number by Band on page 137	1
3	Modem FRU	See Table 45: FRU Part Number by Band on page 137	1
4	PSU FRU	PMPN4053_	1
5	Fan Assembly	PMLN7450_	2
6	Front Panel	PMLN6822_	1
7	Front Bezel	EN000018A01	1
8	Front Panel Flex	84007002001	1
9	PA Flex	CB000057A01	1
10	M3 Screw	0310913B41	20
11	M4 x 10 mm Screw	0310909A61	6
12	M3.5 Screw	0310909A45	1
13	Rx Cable	CB000058A01	1
14	Rx Reference Cable	CB000164A01	1
15	Cable Clamp	42009306002	2
16	Top Cover	HN000168A01	1
17	Bottom Cover	HN000168A02	1

Item No.	Description	Part Number	Quantity
18	Antenna Relay Plug	SL000203A01	1
19	P-Temp Plug	SL000204A01	1
20	Rubber Plug	3287533V01	2
21	PA Back Plate	EN000020A01	1
22	PS Back Plate	EN000035A01	1
23	M3 Clip Screws	0310907A20	4
24	Chassis Clip	BR000050A01	2
25	RF Cable Transmit	CB000419A01	1
26	M4 x 16 mm Screw	0371274L02	10

Table 45: FRU Part Number by Band

Part Number	Description
PMTE4000_S	UHF Band 1 Power Amplifier Module
PMTE4032_S	UHF Band 1 Modem Module
PMTD1360_S	VHF Power Amplifier Module
PMTD4014_S	VHF Modem Module
PMTF4511_S	800/900 Power Amplifier Module
PMTF4510_S	800/900 Modem Module

11.10 Torque Charts

The following table lists the various torque values. Torque all screws to the recommended value when assembling the base station/repeater.

Table 46: Torque Specifications for Nuts and Screws

Driver Type	Torque Set Point (± 1) lb-in
Torx T10	10
Torx T15	10
Torx T20	15
Torx T30	20
0.75 in. Hex Nut Driver	20
8 mm Hex Nut Driver	10
16 mm Hex Nut Driver	15

Chapter 12

SLR 8000 Installation

12.1
Pre-Installation Considerations

Proper installation ensures the best possible performance and reliability of the repeater.
Pre-installation planning is required and includes considering the mounting location of the equipment in relation to input power, antennas, and system interfaces. Also to be considered are site environment conditions, the particular mounting method (several available), and required tools and equipment.

It is highly recommended to read the following before installing this type of equipment for the first time:

- this entire installation section before beginning the actual installation, and
- the Motorola Solutions Quality Standard Fixed Network Equipment Installation manual, R56 (which can be obtained by ordering CDROM 9880384V83), specifically refer to the information on ground connection for lightning protection.

12.1.1
Installation Overview

The following information is an overview for installing the repeater and the ancillary equipment.

Step-by-step procedures for each of the major installation tasks are then provided beginning in Mechanical Installation.

- Plan the installation, paying particular attention to environmental conditions at the site, ventilation requirements, and grounding and lightning protection.
- Unpack and inspect the equipment.
- Mechanically install the equipment at the site.
- Make necessary electrical and cabling connections, including the following:
  - AC input cabling
  - Coaxial cables to transmit and receive antennas
  - System cables
- Perform a post-installation function checkout test of the equipment to verify proper installation. To customize the repeater parameters per customer specifications (such as operating frequency, PL, codes, and so on.) see the *Customer/Programing Software (CSS) Online Help*.

12.1.2
Site Environmental Conditions

If the base station/repeater is to be installed in an environment which is unusually dusty or dirty (and does not meet the air quality requirements), the air used to cool the base station/repeater modules must be treated using appropriate filtering devices. Dust or dirt accumulating on the internal circuit boards and modules is not easily removed, and can cause such malfunctions as overheating and intermittent electrical connections.

The base station/repeater may be installed in a suitable, restricted access, indoor enclosure in any location suitable for electronic communications equipment, provided that the environmental conditions do not exceed the equipment specifications for temperature, humidity and air quality.

These are:

- Operating Temperature Range
  -30 °C (-22 °F) to +60 °C (+140 °F)

  This is the temperature measured in close proximity to the base station/repeater. For example, if the base station/repeater is mounted in a cabinet, the temperature within the cabinet is measured.
- Humidity
  Base Station/Repeater to be kept at or below RH of 95%, non-condensing at 50 °C (122 °F).
- Air Quality
  For equipment operating in an area with airborne contaminants, the airborne particulates level must not exceed 90 ug/m³.

12.1.3
Equipment Ventilation

The SLR 8000 Base Station/Repeaters are equipped with cooling fans that are used to provide forced convection cooling.

12.1.3.1
Mounting in a Cabinet

When planning the installation, observe the following ventilation guidelines:

- Cabinets must be equipped with ventilation slots or openings in the front (for air entry) and back or side panels (for air to exit). If several base station/repeaters are installed in a single cabinet, be sure ventilation openings surround each base station/repeater to allow for adequate cooling.
- All cabinets must have at least 15 cm (6 in.) of open space between the air vents and any wall or other cabinets. This allows adequate air flow.
- When multiple cabinets (each equipped with several base station/repeaters) are installed in an enclosed area, make sure the temperature within each cabinet does not exceed the recommended/ maximum operating temperature of +60 °C (+140 °F). It may be necessary to have air-conditioning or other climate-control equipment installed to satisfy the environmental requirements.

12.1.3.2
Mounting in a Rack

When planning the installation, multiple base station/repeaters can be mounted in an open rack without degradation of specification.

12.1.4
AC and DC Input Power Requirements

This section describes the power requirements for the AC and DC inputs, as well as ground, battery, RF antenna, and system cable connections.

12.1.4.1
AC Input Power Requirements

The SLR 8000 Base Station/Repeater is equipped with a switching power supply, and this assembly operates from 85–264 VAC at 47–63 Hz AC input power. A standard 3-prong line cord is supplied to connect the power supply to the AC source.

Use a standard 3-wire grounded electrical outlet as the AC source.

CAUTION: The AC socket outlet must be installed near the equipment and must be easily accessible.

The outlet must be connected to an AC source capable of supplying a maximum of 500 VA. For a nominal 110/120 VAC input, the AC source must supply 5 A (minimum). Per R56, the minimum ampacity of the circuit (and protective breaker) feeding the repeater should be no less than 15 A. For a nominal 220/240 VAC input, the ampacity requirements can be halved.

- Requirement for European Union (EU) Countries
  Beginning January 1, 2001, input harmonic current specifications were changed for most electronic telecommunication equipment installed in EU countries. Accordingly, the base station/repeater is compliant with the resulting necessary power factor correction.

12.1.4.2
DC Input Power Requirements

For more information see Specifications on page 36.

12.1.4.3
Ground Connection

The base station/repeater is equipped with two ground screws located on the back panel of the base station/repeater. Figure 24: Back Panel Connector Names and Locations (with no options installed) on page 68 shows the location of the grounding screws. Connect the ground screw to the site ground point using a double lug connector. The size of the wire used for this connection must be 8 AWG minimum.

CAUTION:
Refer to Motorola Solutions Quality Standards Fixed Network Equipment Installation Manual R56 (which can be obtained by ordering CDROM 9880384V83), for complete information regarding lightning protection.

The base station/repeater should only be connected to a battery supply that is in accordance with the applicable electrical codes for the end use country; for example, the National Electrical Code ANSI/NFPA No. 70 in the U.S.

12.1.4.4
Battery Connection

Battery backup interface offers the capability of connecting to battery backup power in the event of an AC power line failure. The battery backup system is connected to the base station/repeater through the DC inlet connector on the rear panel of the base station/repeater. See Figure 24: Back Panel Connector Names and Locations (with no options installed) on page 68 for the location of the DC inlet connector.

CAUTION: The base station/repeater should only be connected to a battery supply that is in accordance with the applicable electrical codes for the end use country; for example, the National Electrical Code ANSI/NFPA No. 70 in the U.S.

12.1.4.5
RF Antenna Connections

The transmit and receive antenna RF connections are made using two separate connectors. Coax cables from the receive and transmit antennas must be connected to their respective connectors.

12.1.4.6
System Cable Connections

System connections are made through the Aux and/or Ethernet connectors located on the back panel of the base station/repeater.

12.1.5
Equipment Mounting Methods

The base station/repeater can be mounted in either a rack or cabinet.

Base station/repeater can be mounted:

- In a floor-mount cabinet. Each floor-mount cabinet has front and rear vented doors and has the capacity to hold a minimum of a single base station/repeater (see thermal limitations described under Equipment Ventilation), and required ancillary equipment. The larger cabinets provide additional room for supplementary peripheral equipment.
- In a rack. Open frame racks accept multiple base station/repeaters and ancillary equipment; EIA 48.3 cm (19 in.) rack configuration.

12.1.5.1
Floor-Mounted Cabinet

The front, side and top views for all available floor-mount cabinets are shown in the following figure. See the following table for the cabinet models and associated description.

Table 47: Cabinet Models

Model	Description
DDN2188A	30 in. (76.2 cm) indoor Cabinet
DDN2189A	46 in. (116.84 cm) indoor Cabinet

Refer to Equipment Ventilation on page 139 for recommended ventilation clearances.

CAUTION: Ensure that the cabinet is securely anchored to the floor, thereby avoiding possible equipment tipping and personal injury. Refer to the following figure for details on proper cabinet installation.

Figure 101: Floor Mount Cabinet

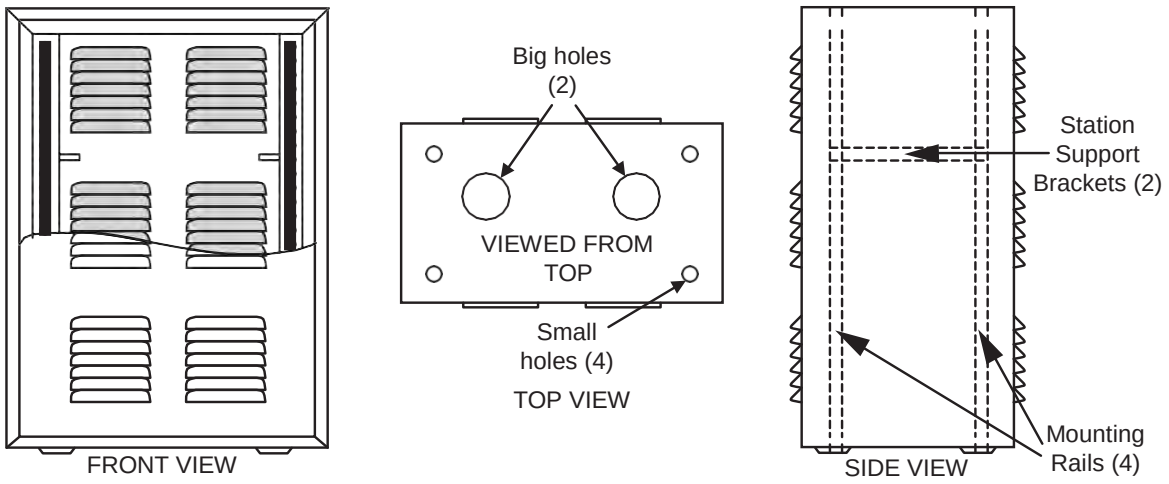

12.1.5.2

Modular Racks

The following table shows rack models and associated description.

Table 48: Rack Models

Model	Description
DDN2192A	30 in. (76.2 cm) Modular Rack (16 RK U)
DDN2193A	45 in. (114.3 cm) Modular Rack (24 RK U)
DDN2194A	52 in. (132.08 cm) Modular Rack (27 RK U)

The side, top and bottom views for all available modular racks are shown in the following figure. The top and bottom plates are identical and all dimensions and clearances are common to all racks.

Recommended clearance front and rear is 91.44 cm (36 in.) minimum for servicing access. Refer to Equipment Ventilation on page 139 for recommended ventilation clearances.

Rack Mount Hardware is included with each rack model. This allows proper installation of the SLR 8000 Base Station/Repeater within the racks center of gravity.

Figure 102: Modular Rack

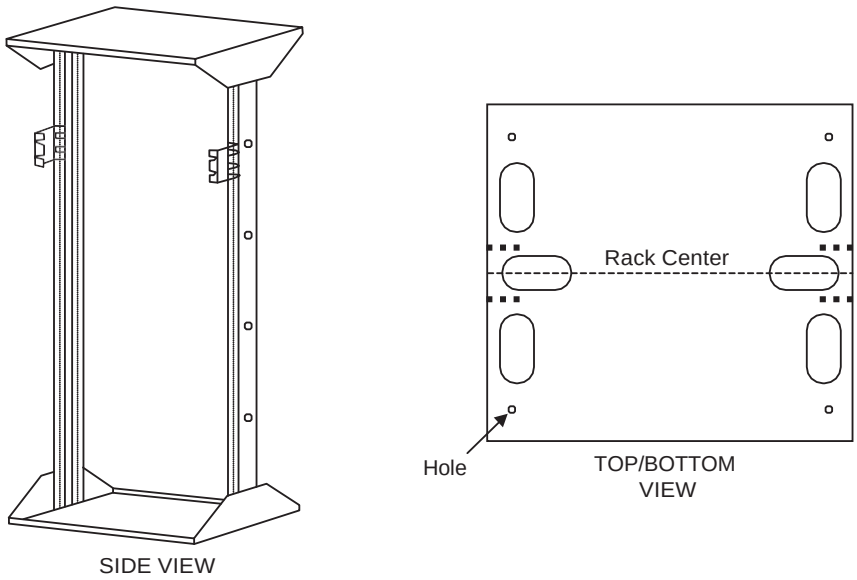

12.1.6
Site Grounding and Lightning Protection

Adherence to standards ensures that a site is protected to the maximum degree and avoids lightning or other power surge-induced equipment failures and, under certain circumstances, personnel safety.

CAUTION: Proper site grounding and lightning protection are vitally important considerations. Failure to provide proper lightning protection may result in permanent damage to the radio equipment.

One of the most important considerations when designing a communications site is the ground and lightning protection system. While proper grounding techniques and lightning protection are closely related, the general category of site grounding may be divided into the following sections:

- Electrical Ground
- RF Ground
- Lighting Ground
- Equipment Grounding

12.1.6.1
Electrical Ground

Ground wires carrying electrical current from circuitry or equipment at the site is included in the category of electrical ground. Examples include the AC or DC electrical power used to source equipment at the site, and wires or cables connected to alarms or sensors at the site.

12.1.6.2
RF Ground

This type of ground is related to the bypassing of unwanted radio frequency energy to earth ground. An example of RF grounding is the use of shielding to prevent or at least minimize the leakage of unwanted RF energy from communications equipment and cables.

12.1.6.3
Lightning Ground

Providing adequate lightning protection is critical to a safe reliable communications site. RF transmission cables, and AC and DC power lines must all be protected to prevent lightning energy from entering the site.

Comprehensive coverage of site grounding techniques and lightning protection is not within the scope of this instruction manual, but there are several excellent industry sources for rules and guidelines on grounding and lightning protection at communications sites.

NOTICE: Motorola Solutions recommends the following reference source:
Motorola Solutions Quality Standards Fixed Network Equipment Installation Manual R56: (which can be obtained by ordering CDROM 9880384V83).

12.1.6.4
Equipment Grounding

The SLR 8000 Base Station/Repeater is equipped with two ground screws on the back panel. These screws are used to connect the base station/repeater to the site grounding. All antenna cables, and AC and DC power cabling, should be properly grounded and lightning protected by following the rules and guidelines provided in the previous sections. Failure to provide proper lightning protection may result in permanent damage to the base station/repeater.

Concept definition.

12.1.7
Recommended Tools and Equipment

In addition to the typical compliment of hand tools, the following tools and equipment are recommended for proper installation of the base station/repeater equipment.

- Tarpaulin or plastic drop cloth or cover surrounding equipment while drilling concrete anchor holes (for installations where cabinet or rack is being anchored to concrete).
- Vacuum cleaner for removing concrete dust caused by drilling.

12.1.8

Equipment Unpacking and Inspection

This section describes ways to unpack and inspect the repeater equipment.

Unpack Equipment

Remove the repeater from the cardboard box. Remove the foam inserts and remove the repeater from the antistatic bag. Keep all packing components for future shipping of the repeater.

Initial Inspection

- After removing the base station/repeater from the packaging, set on the surface for inspection. The top and bottom cosmetic covers should be free of damage. The front housing should have no obvious scuffs or marks.
- Back Panel connectors should be free of damage. Connectors should not be bent with regard to the back panel. Threads on RF connectors should be free of debris and undamaged.
- Remove the protective liner from the lens on the LED display.
- Thoroughly inspect the equipment as soon as possible after delivery. If any part of the equipment has been damaged in transit, immediately report the extent of the damage to the transportation company and to Motorola Solutions.
- When a base station/repeater is delivered from Motorola Solutions, it arrives in suitable packing materials. If the unpacked equipment is damaged, return it to Motorola Solutions in its original packaging.

  CAUTION: Equipment should be handled in its original packaging until it is delivered to its final destination. If the equipment is damaged while being moved without the original packaging, the warranty claim is not valid.

  Improper handling of the base station/repeater may cause personal injury or damage to the base station/repeater. DO NOT pick up the repeater by holding the Preselector (if so equipped). Use the integrated handle on the top of the front bezel of the base station/repeater, or the Power Supply and Power Amplifier casings when picking up the base station/repeater.

12.2
Mechanical Installation

This section describes the equipment unpacking and inspection, as well as the mounting procedure for the repeater.

12.2.1
Mounting Procedures

The base station/repeater can be mounted in the selected cabinet or rack, and may be installed by using the following information.

12.2.1.1
Transferring Equipment from Shipping Container to Rack or Cabinet

As mentioned under Equipment Unpacking and Inspection, a base station/repeater can be shipped in a box. Upon delivery, the equipment must be removed from the container and transferred to a rack or cabinet.

NOTICE: Cabinets and racks must have mounting rails and hole spacing compatible with EIA Universal 48.3 cm (19 in.) specifications. Cabinets must provide adequate ventilation (as detailed under Equipment Ventilation) and must meet the following criteria:
41.3 cm (16.25 in.) deep

48.3 cm (19 in.) wide

13.4 cm (5.25 in.) high

Two mounting rails 5 cm (2 in.) from front of cabinet with front mounting holes
5.7 cm (2.25 in.) apart (center to center).

Contact Motorola Solutions Customer Support for specific questions regarding mounting equipment in customer-supplied cabinets.

12.2.1.2
Installing Racks

In a typical installation, the rack is bolted to a concrete floor to provide stability.

Prerequisites:
The following procedure describes the steps necessary to bolt the rack to a concrete floor. Be sure to check with local authorities to verify that the following procedure conforms to local building codes and regulations before permanently installing the rack.

Procedure:

1. Carefully align the rack at the desired anchoring location.
2. Use the rack mounting foot as a template and mark the location of the six 19 mm (0.75 in.) diameter mounting holes. All six anchoring positions must be used.
3. Move the rack aside, drill holes in the concrete floor, and install the mounting anchors (RAM RD-56 anchors recommended) per instructions provided with the anchors. Make sure that none of the anchors comes in contact with the reinforcing wire mesh buried in the concrete; the rack must be electrically isolated from any other equipment or materials at the site.
4. Align the rack with the installed anchors and lightly secure the rack to the floor using the proper mounting hardware. Do not tighten the mounting hardware at this time.
5. Check the vertical plumb of the rack. Also check that the top is level. Use shims (flat washers or flat aluminum plates) as necessary under the rack mounting foot to achieve vertical plumb and horizontal level.

6 Tightly secure the rack to the floor anchors making sure that it remains vertically plumb and horizontally level.

7 Assemble the two mounting brackets to each side of the base station/repeater either in the front or middle of the base station/repeater depending on whether rack is made for front mount or mid-mount using three supplied screws for each bracket.

8 Hold the base station/repeater in the desired rack location. Line up mounting bracket holes with mounting locations on rack rail and assemble both brackets to the mounting rail on the rack using 10–32 screws.

CAUTION:
Cement dust from concrete flooring is harmful to electronic equipment and wiring. Make sure that the rack and any collocated equipment are protected prior to drilling holes in the concrete floor. Use a tarpaulin, cloth, or plastic sheeting to cover exposed equipment.

(The rack should be already covered with an antistatic bag; do not remove the bag at this time.) Use a vacuum while drilling the holes to minimize the spread of concrete dust. Carefully clean up any accumulated dust and debris from the anchor installation before uncovering the equipment.

12.2.1.3
Cabinet Installation

Each cabinet bottom is pre-drilled with four (4) mounting holes to allow attachment to the site floor.

If installing on a concrete floor, use the cabinet as a template, mark the hole locations, and follow the procedures in Installing Racks on page 146 for anchoring the equipment racks. If installing on a wooden floor, use lag bolts and washers (customer supplied) to secure the cabinet to the floor.

12.3
Post Installation Checklist

After the base station/repeater has been mechanically installed and all electrical connections have been made, power may now be applied and the base station/repeater checked for proper operation.

12.3.1
Apply Power

Turn ON the circuit breaker controlling the AC outlet that is supplying power to the base station/repeater Power Supply Module.

12.3.2
Verify Proper Operation

Operation of the base station/repeater can be verified by:

- observing the state of the seven LEDs on the front panel, and
- exercising radio operation.

CAUTION: Some base station/repeater components can become extremely hot during operation. Turn OFF all power to the repeater and wait until sufficiently cool before touching the base station/repeater.

Symbol indicates areas of the product that pose potential burn hazards.

12.3.3
Front Panel LEDs

After turning on the base station/repeater power (or after a base station/repeater reset), the seven LEDs on the base station/repeater front panel:

- light for approximately one second to indicate that they are functional, then
- turn off for one second, then
- indicate the operational status of the base station/repeater.

12.3.4
Base Station/Repeater Codeplug Data Backup

Backup the base station/repeater codeplug data by using the Customer Programming Software (CPS) on a computer.

12.4
Installing Base Station/Repeater Hardware Options

This section describes ways to install the hardware options of the base station/repeater.

12.4.1
General Bonding and Grounding Requirements

Cabinets and racks used to mount the repeater and optional equipment include a rack grounding bar with the capacity to terminate numerous ground wires. Equipment added to the cabinet or rack should be attached to the grounding bar using solid or stranded 6 AWG copper wires.

See the Motorola Solutions R56 manual Standards and Guidelines for Communication Sites (which can be obtained by ordering CDROM 9880384V83) for more information on proper bonding and grounding at a site.

12.4.2
General Cabling Requirements

Diagrams for cabling are typically included in the system–specific configuration documentation provided by Motorola Solutions.

Also see the Motorola Solutions R56 manual Standards and Guidelines for Communication Sites (which can be obtained by ordering CDROM 9880384V83) for cabling standards.

Chapter 13

SLR 8000 Wireline

13.1 Description

The Wireline Interface Board is described in this section. A general description, identification of inputs and outputs, a functional block diagram, and functional theory of operation are provided. The information provided is sufficient to give service personnel a functional understanding of the module, allowing maintenance and troubleshooting to the module level.

13.1.1 General Description

The SLR 8000 Wireline board is used to connect an analog audio source and sink (such as a console) to the SLR 8000 Base Station/Repeater. The Wireline board supports Tone Remote Control and DC Remote Control, E&M Control, and analog voting modes. For remote control operation (2-wire or 4-wire), the Wireline board allows for channel selection and PTT signaling for use with compatible voting systems, which includes Spectra-TAC and Digi-TAC comparators.

Included on the Wireline board are the following functional circuits.

- WL CODEC
- DC Control Decoder
- Surge Protection
- Impedance Matching Network
- GPIO Signaling
- Antenna Relay Control
- External Circulator Temperature A/D

With few exceptions, the Wireline options are configured and aligned through the CPS and Tuner software configuration tools, just as the other base station/repeater options are. The exceptions are DC Remote and E&M type configurations, which are accomplished through jumper sets on the Wireline board itself.

13.1.2 Input and Output Connections

The following figure shows the location of the Wireline board jumpers and all input and output external connections.

Figure 103: Wireline Board Jumpers and Input/Output Connections

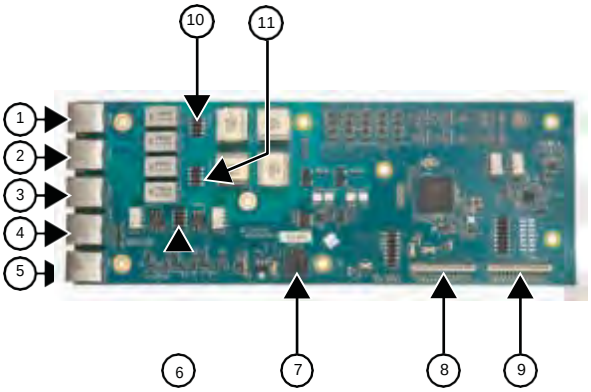

Table 49: Callout Legend

Label	Description
1	WL1
2	WL2
3	GPIO1
4	GPIO2
5	GPIO3
6	P2301_1 Jumpers (E&M Type)
7	P2200_1 (Antenna Relay/External Isolator Temp)
8	J2301_1 (Modem Interface)
9	J2300_1 (Modem Interface)
10	P1200_3 Jumpers (DC Remote for WL1)
11	P1200_4 Jumpers (DC Remote for WL2)

NOTICE: WL1, WL2, GPIO1, GPIO2, and GPIO3 pin out information is in SLR 8000 Back Panel on page 68.

13.2 Specifications

The following table shows the specifications of the SLR 8000 Wireline board.

Table 50: Specifications of Wireline Board

Parameter	Specification
Wireline Transmit Level	+10 to -30 dBm
Wireline Receive Level	+7 to -30 dBm
Return Loss	> 20 dB
Distortion Introduced	< 0.5%

13.3 Board Configuration

There are only two options on the Wireline board that must be configured through jumpers. All other configuration settings are modified using the CPS.

13.3.1 DC Remote Jumper Configuration

When operating the Wireline board in DC Remote Control mode, the jumpers on header P1200_3 must be set. These jumpers route DC Control currents from the correct Wireline pair to the DC Remote Decoder.

NOTICE: For maximum audio performance, the jumpers should be removed when operating in Tone Remote Control or no remote control mode.

The following table and figure shows the jumper configuration and location of jumpers on the P1200_3 connector for the Wireline Interface Board.

Table 51: Wireline Board Jumper Settings

Header P1200_3	Jumpers
No DC Remote	No jumpers installed
2-Wire DC Remote	Jumper pins: 1 to 2, 3 to 4
4-Wire DC Remote	Jumper pins: 5 to 6, 7 to 8

NOTICE: Do not simultaneously enable 2-Wire and 4-Wire DC Remote.

Figure 104: Location of Jumpers on the P1200_3 Connector

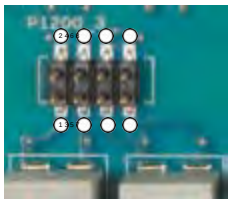

13.3.2 E&M Jumper Configuration

When operating the SLR 8000 in an E&M configuration through the Wireline board, there are two modes to choose from. The E&M mode is selected through the jumper settings on header P2301_1. These jumpers select whether the Wireline board PTT function is electrically isolated or non-isolated.

The following table and figure show the jumpers' configuration and location of jumpers on the P2301_1 connector for the Wireline Interface Board.

Table 52: Wireline Board Jumper Settings

Header P2301_1	Jumpers
Isolated	3 to 5, 4 to 6
Non-Isolated	Jumper pins: 1 to 3, 2 to 4, 5 to 7, 6 to 8

Figure 105: Location of Jumpers on the P2301_1 Connector

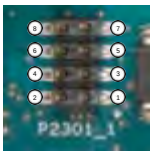

PTT Function:
In isolation mode, a minimum source current of 5 mA (20 mA maximum) is required to assert the PTT function. The current source is to be applied to pin 3, the positive terminal, and pin 6, the negative terminal, of the WL1 connector.

When in non-isolation mode, shorting pin 3 to pin 6 of the WL1 connector asserts the PTT function.

COR Function:
Pins 7 and 8 of the WL1 connector are internally connected to the N.O. contact pair of a relay residing on the Wireline board. When a qualified receiver carrier is present, pins 7 and 8 indicate this condition by being shorted together through the internal relay contacts. The COR operation is the same regardless of the state of the P2301_1 jumper set.

The maximum current through pins 7 and 8 should be limited to 150 mA with potentials no greater than 60 VDC.

13.3.3
Configuring the Wireline Board in CPS

This section describes how to set up the Wireline board using the Customer Programming Software (CPS) tool. Ensure that the Wireline board is properly installed in the base station/repeater and that the CPS software is configured for **Expert View** before proceeding.

When and where to use:
Configure the settings in CPS to match the appropriate table.

Procedure:

1. From the tree view, select **Accessories**.
2. In the **Analog Accessory Emphasis** field, select **De & Pre**
3. In the **Audio Type** field, select the **Rx & Tx Filtered Squelch**.
4. Set the **Audio Priority** field.

   Figure 106: Wireline Audio Configuration in CPS

13.3.3.1
Choosing a Remote Control Mode

The first step in configuring the Wireline board in CPS is to choose a remote control mode.

Procedure:

1. From the tree view, select **Accessories**.

2 From the **Wireline** section, choose the appropriate mode in the **Remote Control Mode** field.

- **TRC** for Tone Remote Control.
- **DC** for DC Remote Control.
- **None** if PTT is generated by a device other than the Wireline board (commonly known as Local PTT)

Figure 107: Setting Remote Control Mode

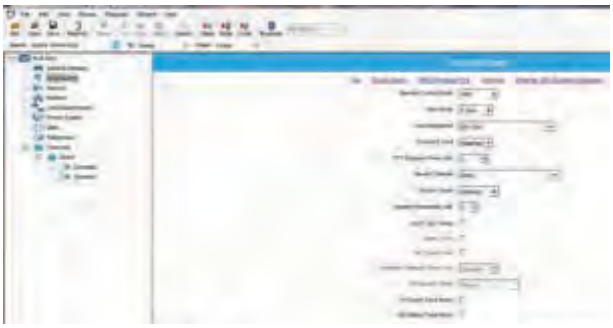

3 In the **Wire Mode** field, select either **2-Wire** or **4-Wire**. See the following figure.

Figure 108: Setting 2-Wire/4-Wire Mode

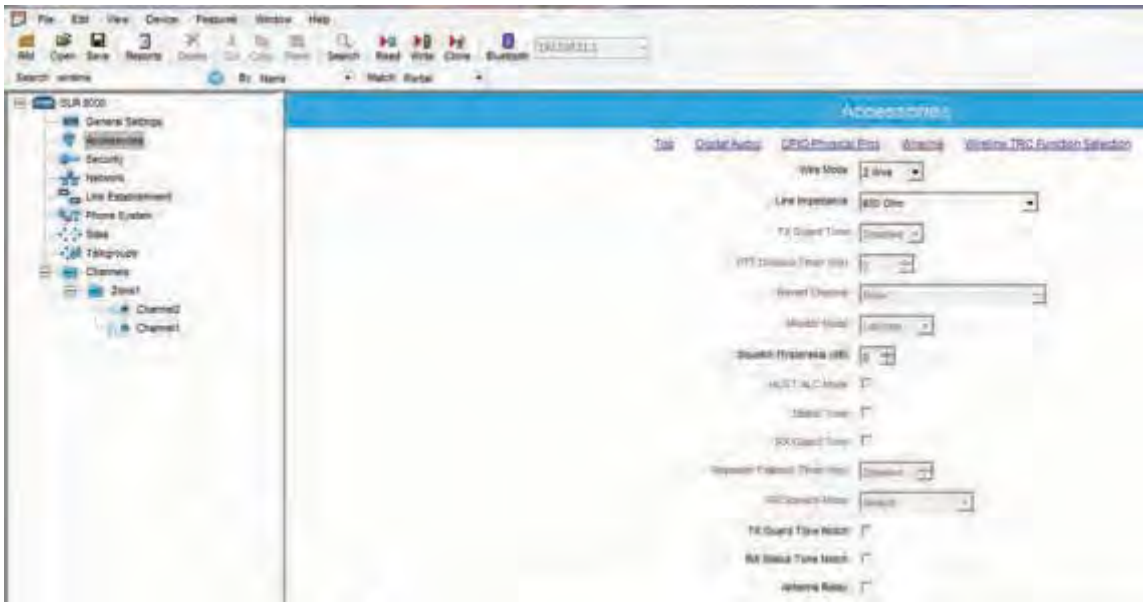

4 If the TRC option is chosen as the remote type, from the **Wireline TRC Function Selection** section, the TRC function tones must be mapped to their desired function. See the following figure.

Figure 109: Setting Wireline TRC Functions

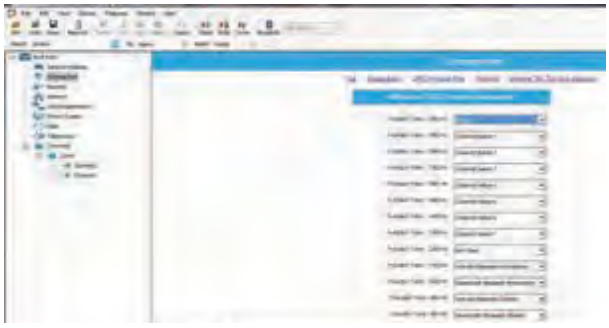

13.3.3.2

Other Wireline Configuration Options

All remaining wireline options can be set as desired, with their respective functions explained in the CPS Help Pane.

13.4

Tone Remote Control

A tone sequence must meet specific requirements for timing, amplitude, and frequency to be considered valid.

The timing requirements for a tone sequence are defined in Figure 110: Timing Requirements for a Valid Tone Remote Control Sequence on page 154. All tone sequences must include a minimum of 120 mS of High Level Guard Tone (HLGT) and 40 mS of function tone, that is Function tone is required (even on single frequency systems).

Low Level Guard Tone (LLGT) is not required. This allows the console to change frequencies or manipulate alternate CPS defined GPIO functions without keying up the base station/repeater. When Low Level Guard Tone is present (at the end of a tone sequence), the base station/repeater keys up and remains transmitting for as long as LLGT is present.

Figure 110: Timing Requirements for a Valid Tone Remote Control Sequence

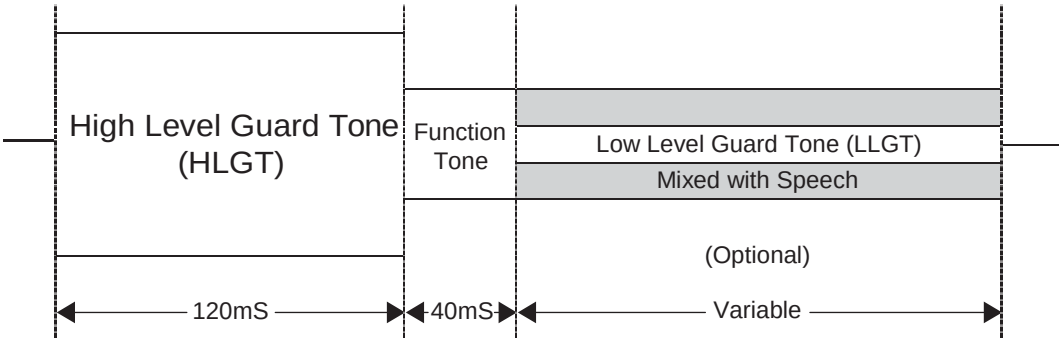

NOTICE: All tones must be within +/-10 Hz of the nominal expected frequency for guaranteed detection.

The required amplitude for HLGT in absolute terms is determined by the Wireline Tx Level alignment process. See SLR 8000 Programming and Tuning on page 91 for more information. HLGT is expected to be 6 dB above the Test Tone level used in the alignment process. Function Tone is expected to be 4 dB below the Test Tone Level and LLGT is expected to be 24 dB below the Test Tone level.

Figure 111: Valid Amplitudes for Tone Remote Control Signaling

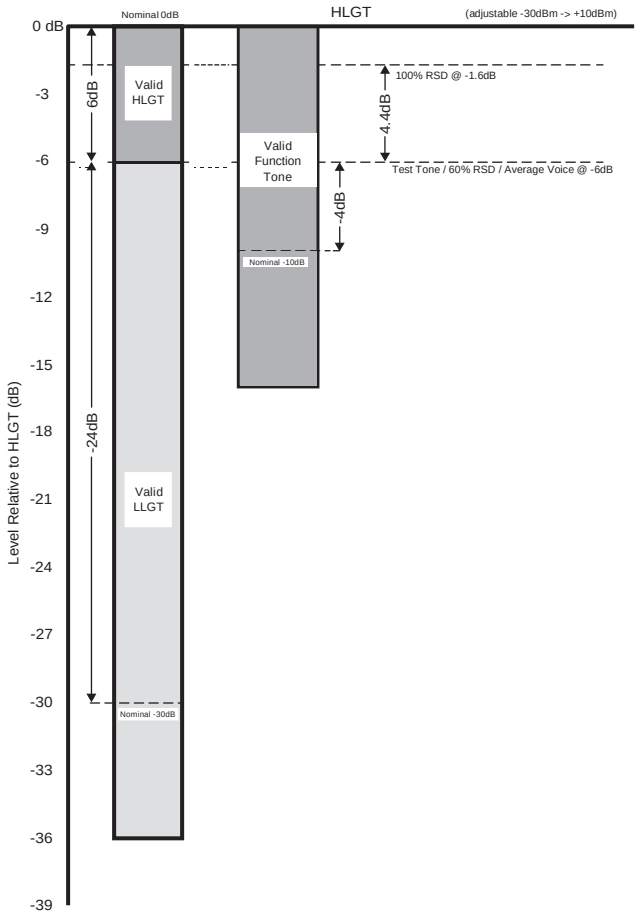

13.5 DC Remote Control

The signaling plan for DC Remote Control is shown in the following table for console configuration.

Ensure that the DC Remote Control routing jumpers are properly configured. See DC Remote Jumper Configuration on page 151. If the base station/repeater does not key up on the expected frequency, reverse the polarity of the wires on the Tx pair of the J6 connector on the back of the base station/repeater.

Table 53: DC Remote Function Definition

DC Current (mA)	Function
-2.5 (+/- 20%)	Monitor
-5.5 (+/- 20%)	Channel 3
-12 (+/- 20%)	Channel 4
2.5 (+/- 20%)	Channel 5

DC Current (mA)	Function
5.5 (+/- 20%)	Channel 1
12.5 (+/- 20%)	Channel 2

13.6

Voting

The following figure displays the relative levels of Rx Guard Tone and a nominally set Status Tone relative to that of Test Tone at 100% RSD. It should be noted that the Guard Tone level is not individually adjustable. In other words, the level of Rx Guard Tone is always at the same level as that of Test Tone.

While Status Tone is nominally set 13 dB below the Test Tone level for Motorola Solutions comparators, the Status Tone level can be adjusted through the Tuner application. See SLR 8000 Programming and Tuning on page 91.

Figure 112: Rx Guard Tone and Status Tone Levels

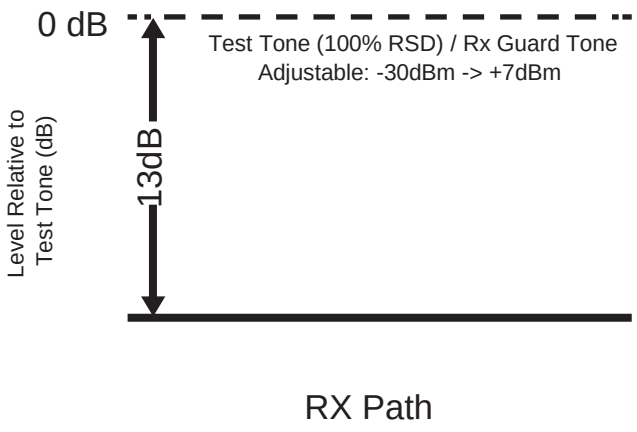

Chapter 14

SLR 8000 Radio Frequency Distribution System (RFDS) Equipment

The Radio Frequency Distribution System (RFDS) equipment included in your system depends on what options were purchased from Motorola Solutions. The following lists some examples of the RFDS equipment available for your system.

14.1 General Description

This section describes the preselector, duplexer, external dual circulator tray, and the antenna relay for the base station and repeater.

14.1.1 Base Station/Repeater Preselectors

The preselector rejects unwanted signals including the transmitter signals from overloading the Receiver. The filter is usually not required when using a Receiver multi-coupler system. This filter can be retuned in the field.

Figure 113: Base Station/Repeater Preselector (UHF version shown)

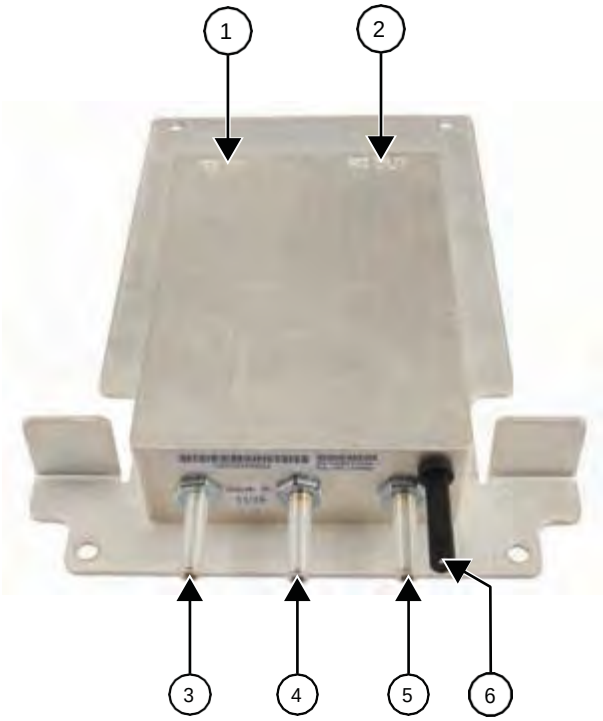

Table 54: Callout Legend

Label	Description
1	RF Input
2	RF Output
3, 4, and 5	Tuning Screws
6	Tuning Plug

14.1.2
Duplexer

This optional filter provides the capability to use a single antenna for both transmitter and Receiver. Only one transmitter and Receiver can be combined.

Figure 114: Duplexer (UHF version shown)

Table 55: Callout Legend

Label	Description
1	RF Input
2	RF Output
3	RF to/from Antenna

Figure 115: Duplexer (800 MHz version shown)

Table 56: Callout Legend

Label	Description
1	RF Out (Rx)
2	RF to/from Antenna
3	RF In (Tx)

NOTICE: A Preselector is required when a base station/repeater Duplexer is ordered.

14.1.3
External Dual Circulator Tray

An option for the SLR 8000 Base Station/Repeater is an External Dual Circulator module, which isolates the base station/repeater from the antenna, thus reducing the transmitter generated inter-modulation. The circulator load dissipates reflected power. It includes a cable that connects to the RF Peripherals port on the base station/repeater backplane interface board to provide temperature monitoring in identifying antenna problems.

Figure 116: External Dual Circulator Tray (UHF version shown)

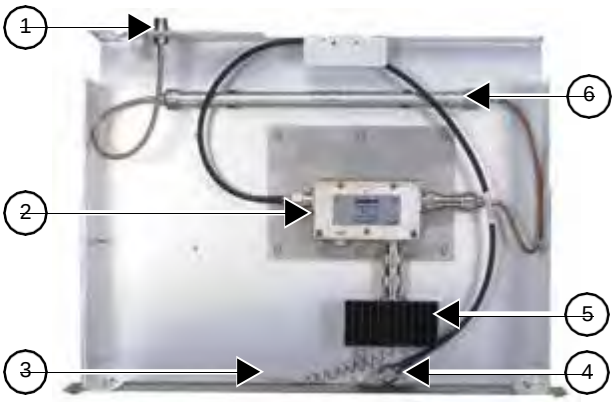

Table 57: Callout Legend

Label	Description
1	RF Output
2	External Dual Circulator
3	RF Peripherals Port
4	RF Input
5	Circulator Load
6	Low Pass Filter

Figure 117: External Dual Circulator Tray (800 MHz version shown)

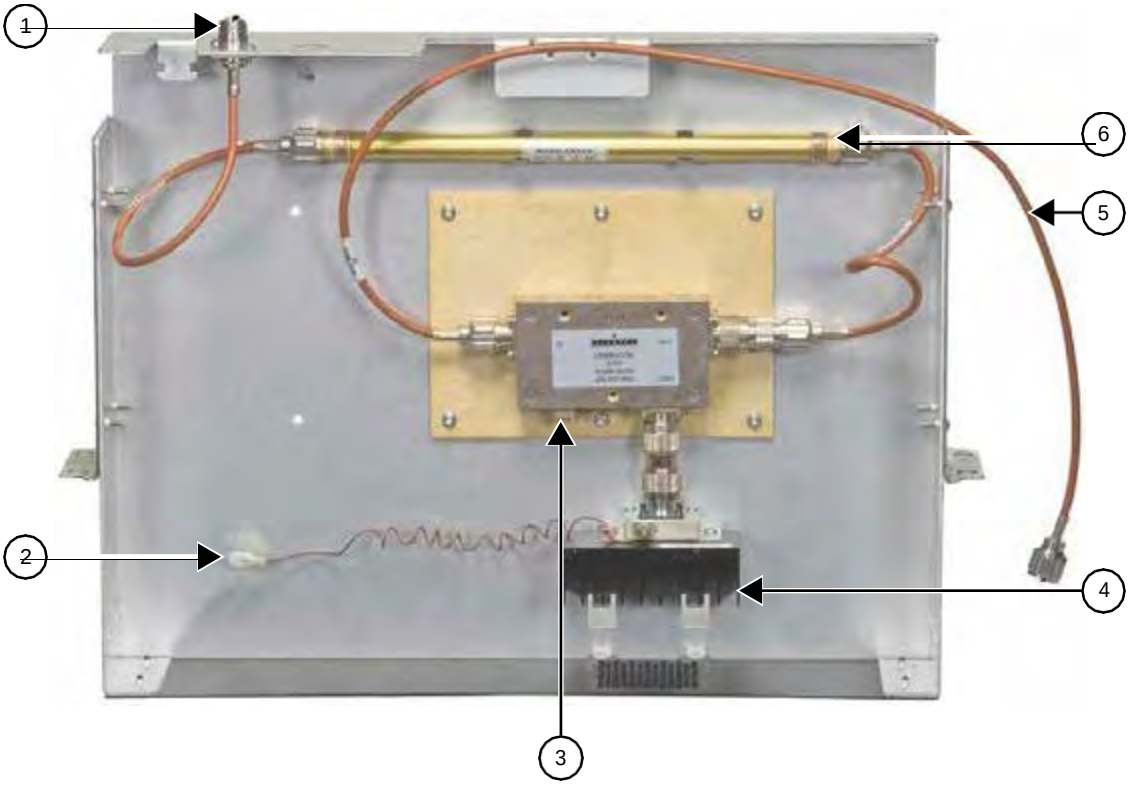

Table 58: Callout Legend

Label	Description
1	RF Output
2	RF Peripherals Port
3	External Dual Circulator
4	Circulator Load
5	RF Input
6	Low Pass Filter

14.1.4
Antenna Relay

The Antenna Relay module allows a single antenna to be used for both transmit and receive functions (Base station/Simplex mode only). The Antenna Relay is controlled by a signal from the Modem Module (through the wireline board) to connect the antenna to either the PA (transmit) when activated/ energized or Receiver Module (receive) when deactivated/de-energized. The Antenna Relay module is mounted on a flange provided on the back panel of the station.

Figure 118: Typical Antenna Relay Module – Inputs/Outputs

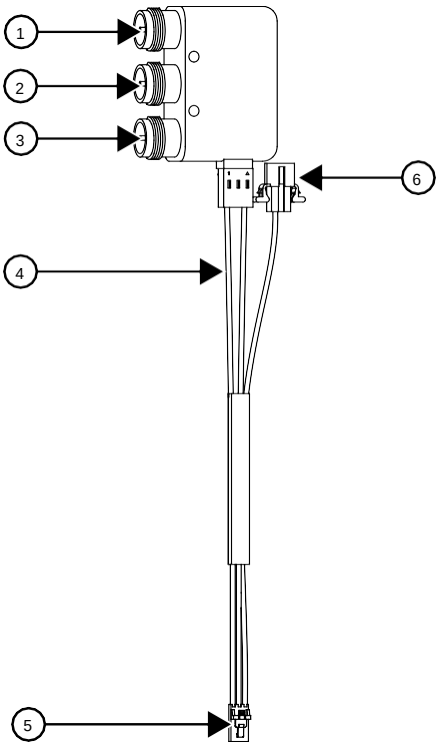

Table 59: Callout Legend

Label	Description
1	Connects to Station Transmit RF Output (from Power Amplifier Module)
2	Connects to Single Transmit/Receive Antenna

Label	Description
3	Connects to Station Receive RF Input (yo Receiver Module or to Optional Preselector)
4	Antenna Relay Control Cable
5	Snaps into Wireline Board
6	Connects to Peripheral Tray, snaps into station's back panel

NOTICE:

- Antenna Relay functionality is provided in analog mode only.
- To enable functionality of the Antenna Relay, the "Antenna Relay" function box must be checked within the "Accessories" field in the CPS.
- The Wireline Board is required for Antenna Relay operation.

14.2 Specifications

This section describes the specifications for the base station and repeater's preselectors, duplexer, external dual circulator tray, and the antenna relay.

14.2.1 Base Station/Repeater Preselectors

The following tables show the spec limit of the preselectors for the VHF and UHF frequency bands.

Table 60: SLR 8000 Base Station/Repeater Preselector Filter Specifications (VHF)

Parameter	Preselector Spec Limit (VHF)	Typical
Tuning Range	136 MHz–154 MHz 150 MHz–174 MHz	–
Bandwidth	4 MHz	–
Insertion Loss	1.2 dB	1 dB
VSWR max.(RL min.)	1.5:1 (14 dB RL)	–
Rejection <108 MHz	24 dB	–
Rejection @ fo +20.4 MHz	31 dB	–
Input Connector	MCX	–
Output Connector	MCX	–

Table 61: SLR 8000 Base Station/Repeater Preselector Filter Specifications (UHF)

Parameter	Preselector Spec Limit (UHF)	Typical
Tuning Range	350 MHz–470 MHz	–
Bandwidth	4 MHz	–
Insertion Loss	1.2 dB	1 dB
VSWR max. (RL min.)	1.3:1 (17.5 dB RL)	1.5:1
Rejection <300 MHz	18 dB	–

Parameter	Preselector Spec Limit (UHF)	Typical
Rejection @ fo +52.8 MHz	20 dB	–
Input Connector	MCX	–
Output Connector	MCX	–

NOTICE: See Accessories on page 191 for the model number.

14.2.2
Duplexer

The following tables show the spec limit of the duplexers for the VHF, UHF and 800/900 MHz frequency bands

Table 62: SLR 8000 Duplexer Specifications (VHF)

Parameter	Duplexer Spec Limit	Typical	Notes
Frequency range	136 MHz–146 MHz, 144 MHz–160 MHz, 158 MHz–174 MHz	–	–
Insertion loss Tx	1.3 dB	0.7 dB	–
Insertion loss Rx	1.3 dB	0.5 dB	–
VSWR max.	1.5:1	1.2:1	–
Rx isolation	75 dB	80 dB	–
Tx isolation	75 dB	77 dB	–
Antenna Connector	N female	–	–
Rx/Tx Output Connector	N female	–	Reduced performance down to 1 MHz spacing
Minimum Rx-Tx Frequency Spacing	1.5 MHz	–	–

Table 63: SLR 8000 Duplexer Specifications (UHF)

Parameter	Duplexer Spec Limit	Typical	Notes
Frequency range	403 MHz–435 MHz, 435 MHz–470 MHz,	–	–
Insertion loss Tx	1.3 dB	1.1 dB	–
Insertion loss Rx	1.3 dB	1.1 dB	–
VSWR max.	1.3:1	1.2:1	–
Rx isolation <470 MHz >470 MHz	100 dB 100 dB	–	R/T 5 MHz R/T 3 MHz
Tx isolation	100 dB	–	R/T 5 MHz

Parameter	Duplexer Spec Limit	Typical	Notes
<470 MHz >470 MHz	100 dB		R/T 3 MHz
Antenna Connector	N female	–	–
Rx/Tx Output Connector	N female	–	–

Table 64: SLR 8000 Duplexer Specifications (800 MHz)

Parameter	Duplexer Spec Limit	Typical	Notes
Frequency range	806 MHz–825 MHz, 851 MHz–870 MHz,	–	–
Insertion loss Tx	1.0 dB	0.8 dB	–
Insertion loss Rx	1.0 dB	0.8 dB	–
VSWR max.	1.5:1	1.3:1	–
Rx isolation <470 MHz >470 MHz	80 dB	–	–
Tx isolation <470 MHz >470 MHz	80 dB	–	–
Antenna Connector	QN	–	–
Rx/Tx Output Connector	QN	–	–

14.2.3
External Dual Circulator Tray

The following tables shows the spec limit of the External Dual Circulator Trays for VHF, UHF and 800 MHz frequency bands.

Table 65: SLR 8000 External Dual Circulator Specifications (VHF)

Parameter	External Dual Circulator Spec Limit	Typical
Operating Frequency Range	136–146 MHz, 144–160 MHz, 158–174 MHz	–
Insertion Loss	1.6 dB	0.7 dB
Input Return Loss	18 dB	25 dB
Reverse Isolation	40 dB	50 dB
Power (continuous)	200 W	–
Harmonic Attenuation <1 GHz	50 dB	–
Input Connector	RF cable with N male	–
Output Connector	N female	–

Table 66: SLR 8000 External Dual Circulator Specifications (UHF)

Parameter	External Dual Circulator Spec Limit	Typical
Operating Frequency Range	403–435 MHz, 435–470 MHz,	–
Insertion Loss	1.6 dB	1.2 dB
Input Return Loss	18 dB	24 dB
Reverse Isolation	40 dB	50 dB
Power (continuous)	200 W	–
Harmonic Attenuation <10 GHz	70 dB (Typical: 80 dB)	–
Input Connector	RF cable with N male	–
Output Connector	N female	–

Table 67: SLR 8000 External Dual Circulator Specifications (800 MHz)

Parameter	External Dual Circulator Spec Limit	Typical
Operating Frequency Range	762–870 MHz,	–
Insertion Loss	1.6 dB	1.2 dB
Input Return Loss	18 dB	–
Reverse Isolation	40 dB	42 dB
Power (continuous)	200 W	–
Harmonic Attenuation	60 dB	–
Intermodulation (2 tone, 100 W each)	-75 dBc	–
Input Connector	RF cable with N male	–
Output Connector	N female	–

NOTICE: See Accessories on page 191 for the model number.

14.2.4
Antenna Relay

The following table shows the spec limit for Antenna Relay.

Table 68: SLR 8000 Antenna Relay Specifications

Parameter	Antenna Relay Spec Limit
Operating Frequency	DC to 4 GHz @ 20 °C
Maximum Input Power	500 W @ 1 GHz
Coil Specifications: Pull-in voltage	10.0 VDC minimum 2.0 VDC maximum
Drop-out voltage	100 Ω ±10% @ 20 °C
Resistance	

Parameter	Antenna Relay Spec Limit
Contact Specifications: Type	SPDT Fail-safe (Break before make)
Actuation	20 ms maximum @ 20 °C
Pull-in time	20 ms maximum @ 20 °C
Drop-out time (Includes remake of NC contact)	
Insertion Loss	0.3 dB maximum
Isolation	70 dB minimum
VSWR Maximum	1.3:1
Temperature Range	-30 °C to +80 °C
Terminations	Female N-Type
Input and Output Impedance	50 Ω

NOTICE: See Accessories on page 191 for the model number.

CAUTION: To ensure that the Antenna Relay is physically in proper position during transmitter key-up, set the **Antenna Relay Delay Timer** minimally to 50 ms in the CPS. If a value of less than 50 ms is entered into the CPS, the antenna relay will be damaged.

14.3 Field Tuning Procedures

This section describes the tuning procedures for the base station/repeater's preselectors and duplexers.

14.3.1 Base Station/Repeater Preselectors

Depending on the configuration, the base station/repeater may have an Internal Preselector assembly with the always present integrated preselector. The optional Internal Preselector assembly is a 3-pole bandpass filter equipped with tuning slugs to adjust the passband corresponding to the operating frequency(s) of the base station/repeater. For the integrated preselector, circuitry in the Receiver Module provides a varactor-tuned bandpass filter which adapts to the required frequency range.

The internal preselector must be retuned if the preselector assembly or Receiver Module are replaced in the field, or if the base station/repeater operating frequency(s) are modified. The integrated varactor-tuned preselector is factory-tuned to cover the relevant frequency band in its entirety. The integrated preselector does not require field tuning even if the Receiver Module is replaced.

14.3.1.1 Test Equipment

The following test equipment is required to properly tune the preselector assembly.

No	Item	Type
1	Network Analyzer	Keysight E5062A/E5071B/ E5071C or equivalent
2	Tuning Cable	N-type

No	Item	Type
3	Torx Driver	T10 bit
4	Two Adaptors	N-MCX

14.3.1.2
Setting Up the Equipment

Perform the following procedures using the network analyzer to setup the equipment to tune the 350–470 MHz preselector.

Procedure:

1. Setup the Initial frequency by performing the following actions:
   - **a** Press the **START** key and input 310 MHz.
   - **b** Press the **STOP** key and input 620 MHz.
2. Setup the Marker: Enter the four marker frequencies shown below into the NWA memory.

Mark No	Frequency
1	433 MHz
2	437 MHz
3	466 MHz
4	470 MHz

3. Setup the Output level by performing the following actions:
   - **a** Select **MENU**.
   - **b** Press **POWER** and input 10 dBm.
4. Setup the Sweep points by performing the following actions:
   - **a** Select **MENU**.
   - **b** Press the **NUMBER OF POINTS** soft key, and input 401.
5. Setup the Display mode by performing the following actions:
   - **a** Select **DISPLAY**.
   - **b** Press the **ALLOCATE CHANNELS** soft key.
   - **c** Select **X1**.
   - **d** Return to **DISPLAY** page.
   - **e** Press **NUMBER OF TRACES** and select **2**.
   - **f** Return to **DISPLAY** page.
   - **g** Press **ALLOCATE TRACES** and select **X2**.
6. Setup the S-parameter plot by performing the following actions:
   - **a** Select **S12 (S21)**.
   - **b** Press the **SCALE REF** soft key.
   - **c** Select the **REFERENCE POSITION** soft key and input 10/DIV.
   - **d** Press the **REFERENCE VALUE** soft key and input 0.
7. Setup the S11 (S22) plot as a return loss by performing the following actions:

a Press the **FORMAT** key.

b Select the **LOG MAG** soft key.

c Select **SCALE REF**.

d Press **SCALE/DIV** and input 1/DIV.

e Press the **REFERENCE VALUE** soft key and input -18.

14.3.1.3
Tuning the Preselector (Preferred Method)

When and where to use:
Once the Network Analyzer (NWA) is properly calibrated, perform the following procedures to tune the preselector.

Procedure:

1 Set up the connections by performing the following actions:

a If necessary, disconnect and remove the 350–470 MHz band preselector assembly from the base station/repeater.

b Connect the 350–470 MHz band preselector to the NWA via the adaptors and cables shown in the following figure.

Figure 119: Connecting Preselector to the NWA

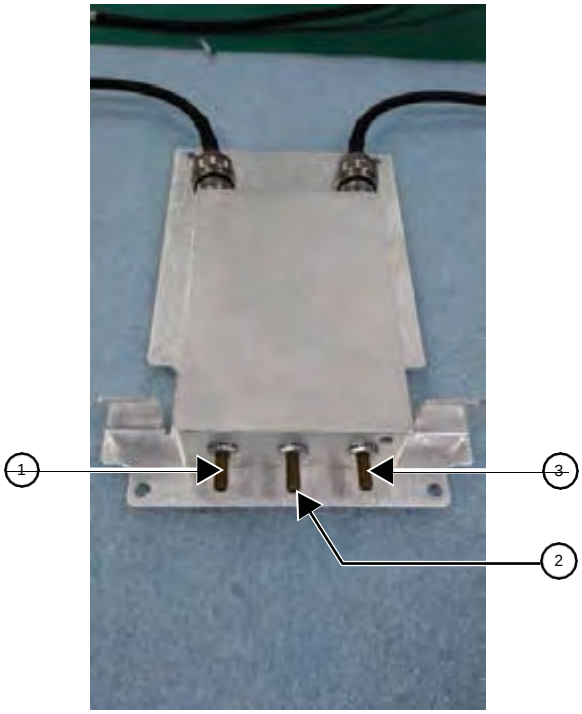

Table 69: Callout Legend

Label	Description
1	Tuning Screw 1
2	Tuning Screw 2
3	Tuning Screw 3

2 Unit Tuning - An example exercise illustrating a re-tuning to a center frequency of 470 MHz, as follows:

a Initial Curve:

The preselector, if already tuned, should look similar for a given center frequency to that of the NWA display shown in the following figure. The example is tuned to 435 MHz.

Figure 120: Initial Curve (Start 400 MHz, Stop 620 MHz)

To expand and thus better display the curve, readjust the STOP band value to a lower value, such as 505 MHz as shown in the following figure.

Figure 121: Initial Curve (Start 400 MHz, Stop 505 MHz)

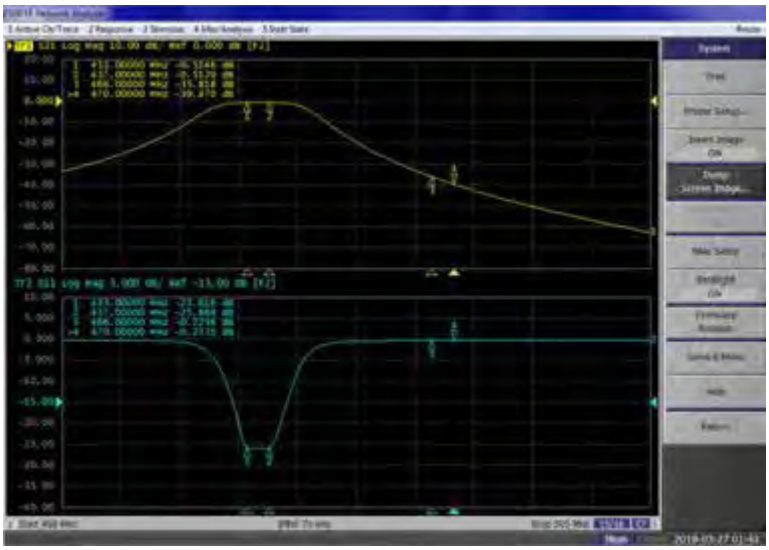

b Rough Tuning:

1 Adjustment of the tuning screws changes the position of the frequency peaks on the displayed curves. As an example, note that when screw 1 is adjusted counterclockwise, the resonance peak moves to the right and if turned clockwise, the peak moves to the left.

2 Continue adjust tuning screw 1 until the peak moves into the 466–470 MHz range (the area between Marker 3 and Marker 4). See the following figure.

Figure 122: Passband Tuning of Tuning Screw 1 to the New Passband

3 Adjust tuning screw 2 until the peak moves into the 466–470 MHz range (the area between Marker 3 and Marker 4). See the following figure.

Figure 123: Passband Tuning of Tuning Screw 2 to the New Passband

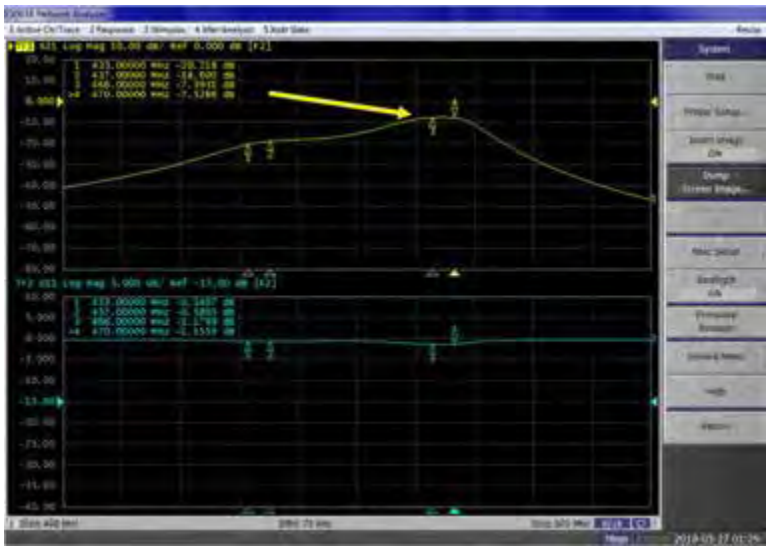

4 In a similar process as tuning with screws 1 and 2, tune screw 3 until the peak adjusted by it moves into the passband area between Marker 3 and Marker 4. See the following figure.

Figure 124: Passband Tuning of Tuning Screw 3 to the New Passband

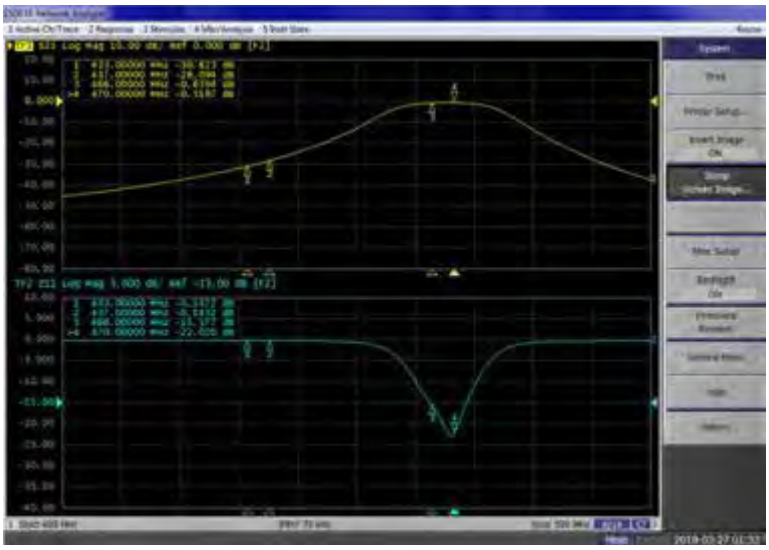

c Fine Tuning:

1 The 350–470 MHz band preselector is now roughly tuned to the required passband. See the following figure. The preselector performance now needs to be fine-tuned to specification-required frequencies and levels.

Figure 125: Passband and Return Loss after Rough Tuning

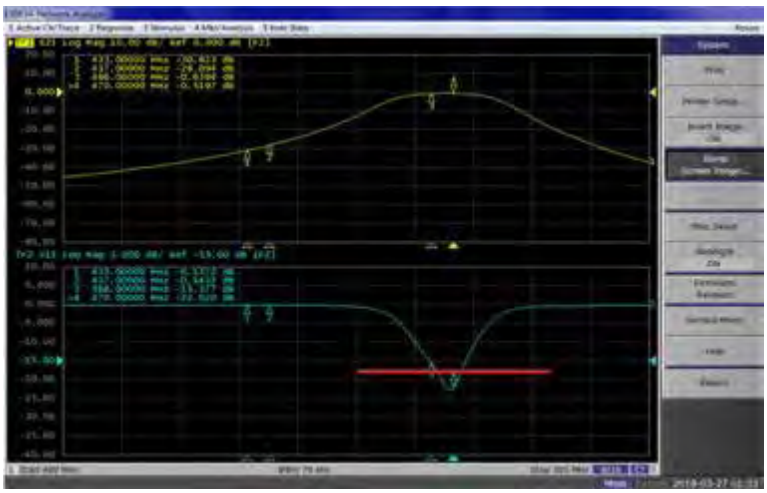

Figure 126: Return Loss

2 In this process, make only small (less than 10 °) adjustments. Working with each of the tuning screws 1, 2, and 3 (one at a time), make slight adjustments in either direction while observing the return loss curve.

3 Continue this process of adjusting each of the screws one at a time by small rotations until the optimized return loss performance is provided as shown in the following figure where all of the pass band return loss curve is well below the red limit line.

Figure 127: Result after Fine Tuning

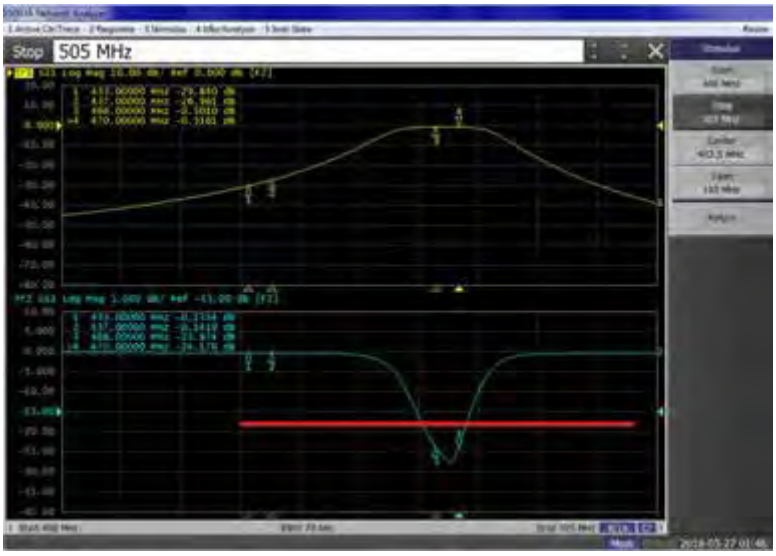

3 **Final Inspection:**

a Inspect the final performance curves and parameter plot against the following specification limits in Table 61: SLR 8000 Base Station/Repeater Preselector Filter Specifications (UHF) on page 162.

- Insertion Loss
- VSWR (RL)
- Rejection < 300 MHz
- Rejection @ fo +52.8 MHz

b Tighten the tuning nuts to approximately 1.36 Nm (12 lb-in), so the screws are secure. Make very slight adjustments at any of the screws to compensate for change tightening that screw causes.

4 To reassemble, mount the preselector assembly in the station, and reconnect the previously-removed cabling.

NOTICE:
All instruments should be properly calibrated before operation.

All joints between cavity and instrument should be checked. Loose connections can greatly impact the tuning results.

Rejection meets specification requirements after passband and return loss are tuned, and it is needless to check one by one. However, the passband shall be tuned to the center frequency. In other words, insertion loss of two side frequencies of pass band is approximate.

Lock the tension nut with proper torque force: 1.2 Nm ~ 1.3 Nm. Excessive torque leads to excessively tight locking (hard to tune) and inadequate to loose locking (tuning screw falling off).

The methodology and procedure for the VHF preselector is similar to that of the UHF preselector.

14.3.1.4

Tuning the Preselector (Alternate Method)

While less precise than the preferred method previously described, this method allows retuning the preselector without removing the station's cover nor removing the station from its mounting in a cabinet or rack. While less accurate, this method still allows minimum specified performance to be achieved.

When and where to use:
Once the Network Analyzer (NWA) is properly calibrated, perform the following procedures to tune the preselector.

Procedure:

1. Set up the connections by performing the following actions:
   - **a** Remove the protective plug of the probe cavity from the rear of the preselector.
   - **b** Connect the 350–470 MHz band preselector to the NWA through the adaptors and cables shown in the following figure.

     Figure 128: Connecting Preselector to the NWA

Table 70: Callout Legend

Label	Description
1	To Port 1 of NWA
2	Tuning Screw 1
3	Tuning Screw 2
4	Tuning Screw 3
5	Tuning Probe to Port 2 of NWA

2. Unit Tuning:
   - **a** This procedure is identical to that described in step 2 of Tuning the Preselector (Preferred Method) on page 168. The exception is that one will not be able to see the absolute insertion loss of the preselector assembly. The approximate insertion loss using the tuning probe in the alternate method is as follows:
     - VHF 50 dB +/- 10 dB
     - UHF 30 dB +/- 10 dB

     As such, insertion loss is relative, with a return loss still yielding an absolute measurement. With this method, tune for a return loss greater than 18 dB across the 4 MHz passband of interest.
   - **b** Reinstall the preselector's protective plug of the probe cavity.

14.3.2
Duplexer

Duplexer modules shipped with stations are tuned at the factory. If a duplexer must be replaced in the field, the unit must be installed and tuned specifically to the transmit and receive frequency pair for the particular base station/repeater.

The duplexer module is comprised of three low-pass/high-notch cavities and three high-pass/low-notch cavities. Each set of three cavities provides bandpass filtering for either the transmit RF signal or the receive RF signal. In general, the duplexer must be tuned so that the transmit cavity set passes the transmit signal and rejects the receive signal and, at the same time, the receive cavity set must be tuned to pass the receive signal and reject the transmit signal.

NOTICE: The 800 MHz duplexer model is fixed and does not require tuning.

CAUTION: This tuning procedure is valid for channels with a bandwidth of 200 kHz or less. If the bandwidth is more than 200 kHz, the duplexer must be tuned by the service depot.

Tuning is performed by injecting RF signals and making tuning adjustments (using the tuning pass and notch and trimmer screws) while monitoring for maximum or minimum readings on the RF millivoltmeter. Field tuning the duplexer module requires the following general adjustments:

- Tune high-pass/low-notch cavities for maximum pass and reject response.
- Tune low-pass/high-notch cavities for maximum pass and reject response.
- Check high-pass/low-notch and low-pass/high-notch cavities for insertion loss.

Check high-pass/low-notch and low-pass/high-notch cavities for isolation.

14.3.2.1
Duplexer Tuning Procedures (with Basic Instruments)

The following test equipment are required to properly tune the duplexer module:

- Aeroflex 3900 Series Communications System Analyzer (or equivalent).
- RF Millivoltmeter (Boonton 92E or equivalent).
- RF Signal Generator (HP8565B or equivalent).
- 50 Ω N-type terminator.
- Tuning tool; 4 mm x 10.1 cm (5/32 in. x 4 in.) screwdriver.
- N-to-N bullet connector (UG29A/U or equivalent).
- 11 mm (7/16 in.) Nutdriver.
- 11 mm (7/16 in.) Open-end Wrench.
- N-to-BNC Adapter (UG349A/U).
- N-to-N Connector (UG57B/U).

14.3.2.1.1
Duplexer Tuning Set Up

When and where to use: Perform the preliminary tasks shown below prepare the duplexer module for tuning.

CAUTION: Each Duplexer cable is unique and must be returned to the original position when removed. Use tape to label each end of each cable to ensure it is correctly replaced.

Figure 129: Preliminary Tasks Prior to Tuning Duplexer

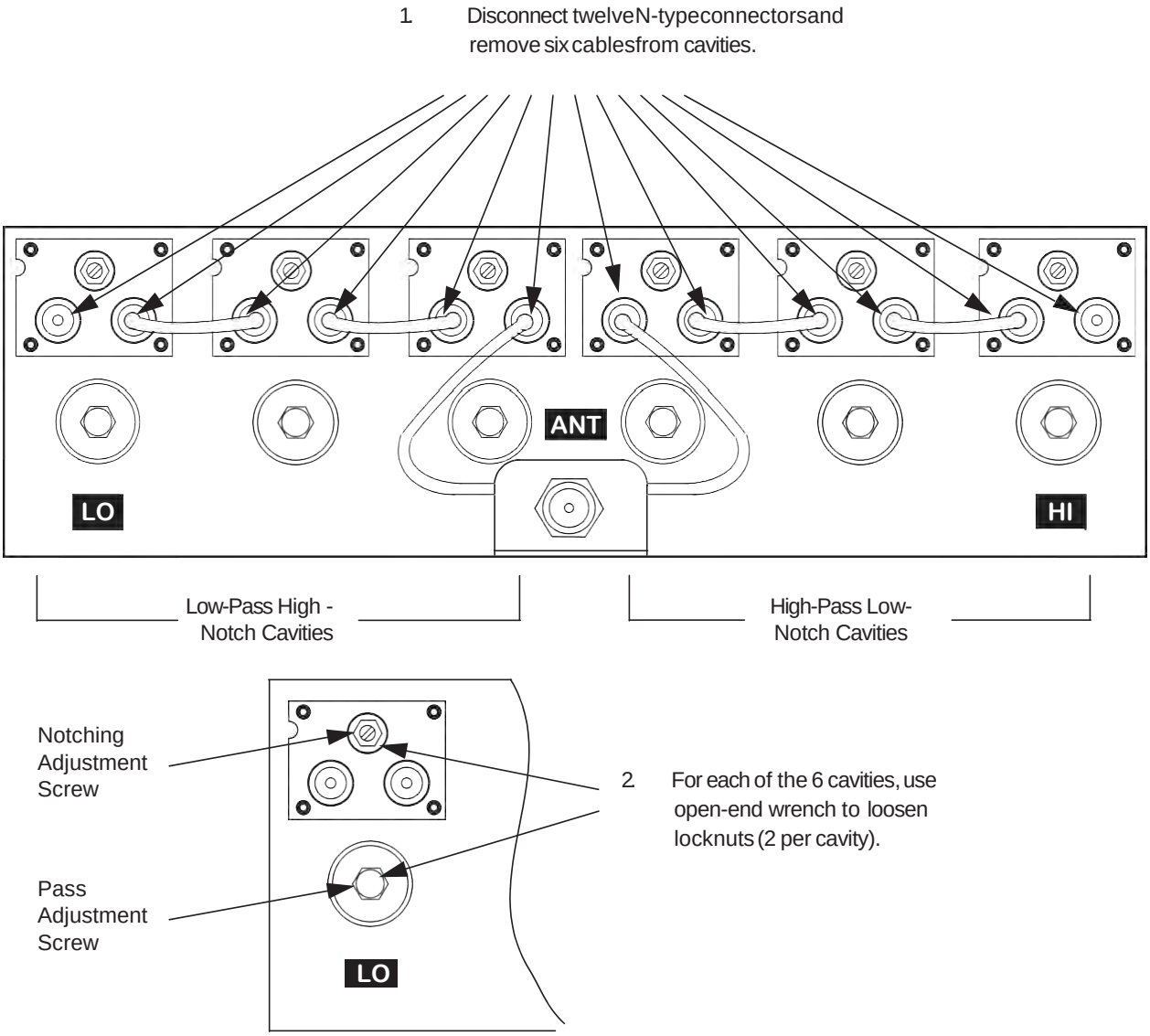

14.3.2.1.2

Duplexer Tuning

The duplexer field tuning procedures are provided in the UHF Duplecer Field Tuning Procedure. The procedures are most easily performed with the duplexer module removed from the base station/ repeater rack or cabinet. Be sure to take note of the transmit and receive frequencies for the particular base station/repeater before beginning.

If the duplexer module is tuned according to instructions and does not meet specifications for return loss, insertion loss, and/or isolation, return the duplexer for repair.

The notch (reject) frequency will maintain its spacing to the pass frequency when the pass adjustment of a cavity is moved several MHz. For example, a system operating at 455 MHz and 460 MHz, which is moved to 460 MHz and 465 MHz will require a minimum of readjustment if the pass adjustment is made first. It is recommended to make the pass adjustments first and follow the procedures.

To start the tuning procedure, remove cables from the duplexer, noting and label the position of each cable. Each cable is unique and must be returned to the original position when tuning is complete.

Refer to the following procedures to complete the Duplexer Tuning process.

14.3.2.1.2.1
Tuning Low Pass Resonators

Follow the procedure to tune Pass Resonators low.

Procedure:

1. Connect the millivoltmeter and signal generator to the first cavity shown in the figure.

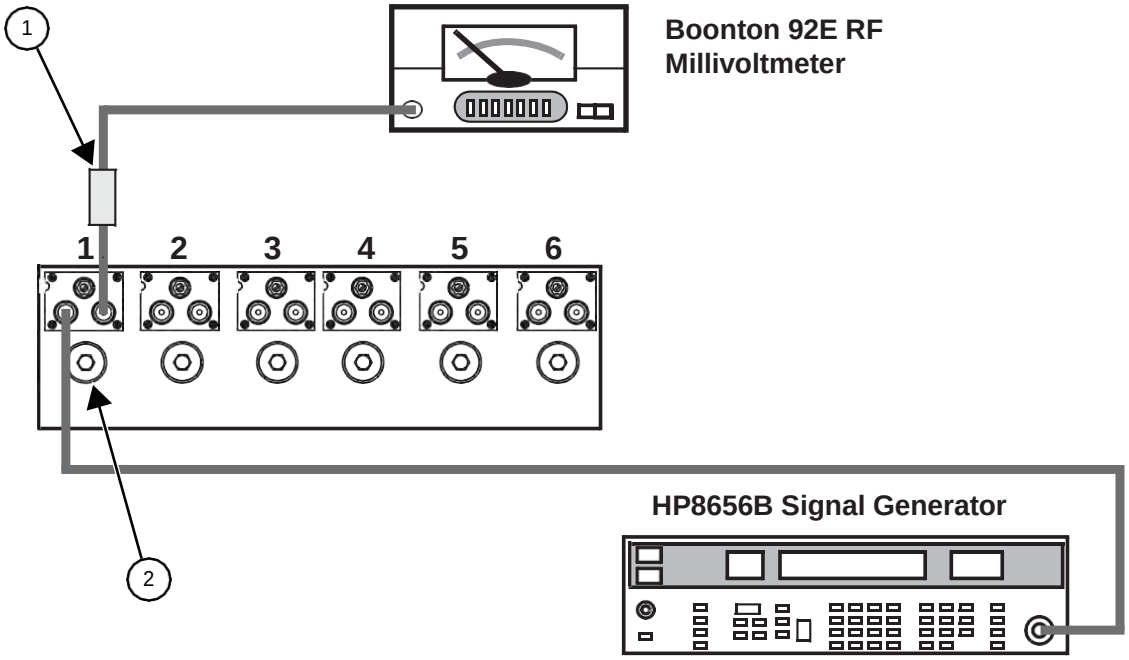

Label	Description
1	6 dB In-line pad (50 Ω)
2	Pass Adjustment Screw and Lock Nut

2. Set millivoltmeter's range to +10 dBm.
3. Set signal generator's frequency to Rx or Tx, whichever is lower. And set output level to +10 dBm.
4. Adjust pass adjustment screw of the first cavity using a nut driver to obtain a peak reading on the millivoltmeter.
5. Tighten lock nut carefully using an open-end wrench. Make sure pass adjustment screw does not shift position.
6. Repeat step 1 to step 5 on the second and third cavity.

14.3.2.1.2.2

Tuning High Pass Resonators

Follow the procedure to tune Pass Resonators high.

Procedure:

1 Connect the millivoltmeter and signal generator to the fourth cavity shown in the figure.

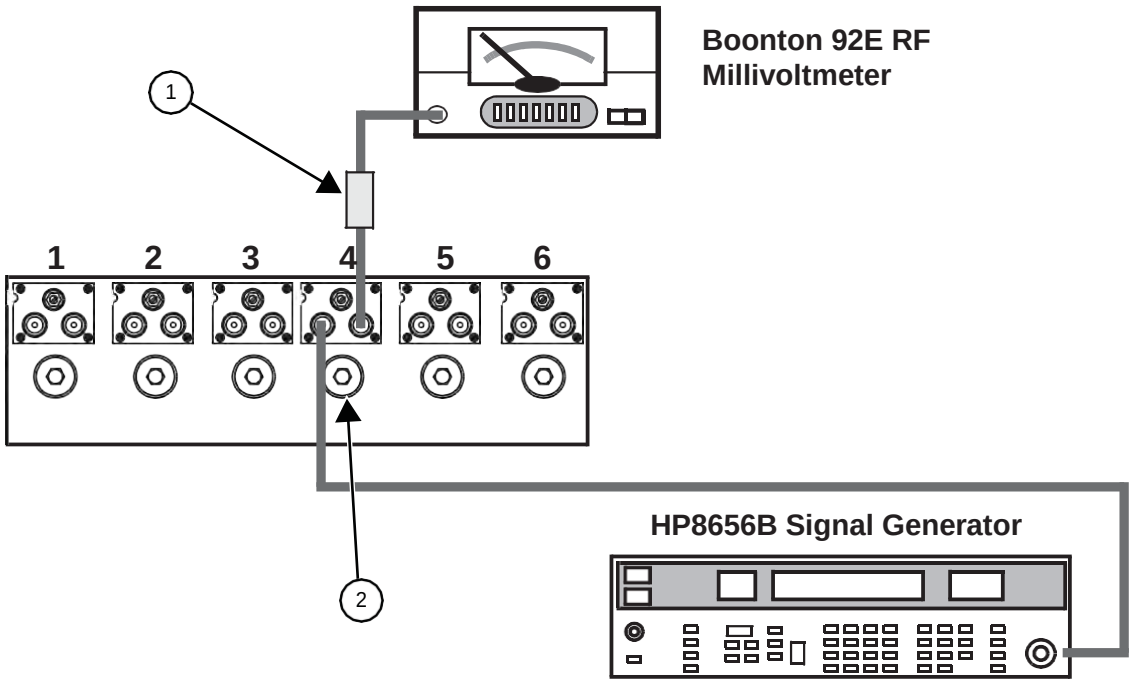

Label	Description
1	6 dB In-line pad (50 Ω)
2	Pass Adjustment Screw and Lock Nut

2 Set millivoltmeter's range to +10 dBm.

3 Set signal generator's frequency to Rx or Tx, whichever is higher. And set output level to +10 dBm.

4 Adjust pass adjustment screw of the fourth cavity using a nut driver to obtain a peak reading on the millivoltmeter.

5 Tighten lock nut carefully using an open-end wrench. Make sure pass adjustment screw does not shift position.

6 Repeat step 1 to step 5 on the fifth and sixth cavity.

14.3.2.1.2.3

Tuning High Notch Loop Assemblies

Follow the procedure to tune Notch Loop Assemblies high.

Procedure:

1 Connect the millivoltmeter and signal generator to the first cavity shown in the figure.

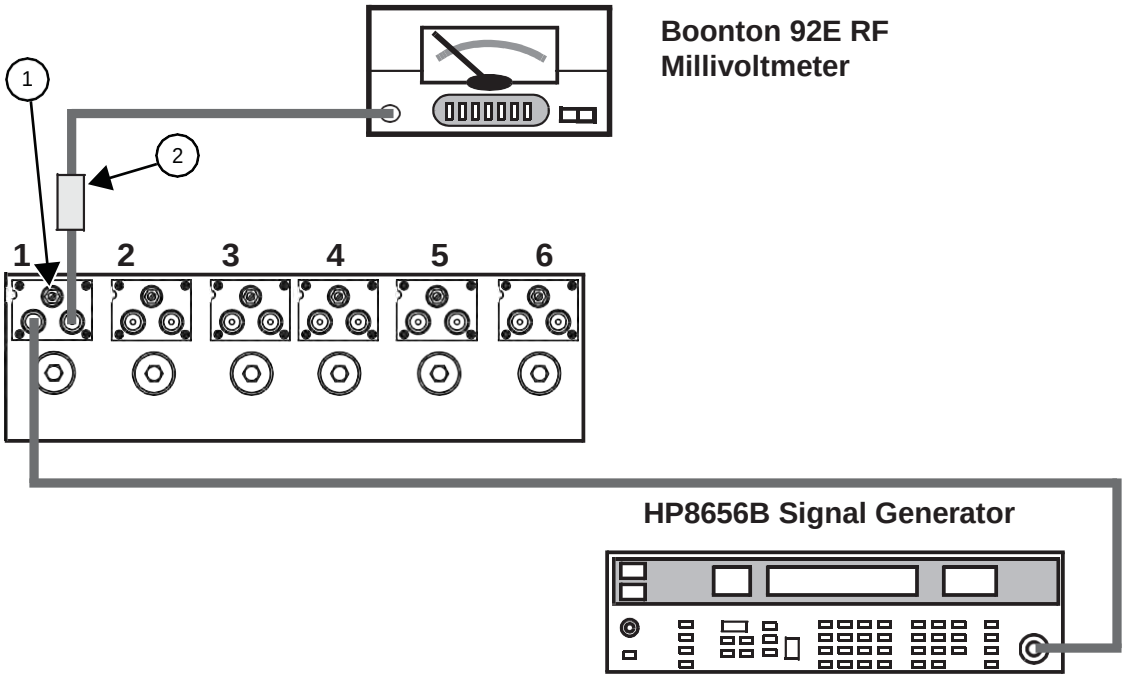

Label	Description
1	Notch Adjustment Screw and Lock Nut
2	6 dB In-line pad (50 Ω)

2 Set millivoltmeter's range to +10 dBm.

3 Set signal generator's frequency to Rx or Tx, whichever is higher. And set output level to +10 dBm.

4 Adjust notch adjustment screw of the first cavity using a screwdriver to obtain a minimum reading on the millivoltmeter.

Reduce the range on the millivoltmeter as necessary to reach true minimum reading.

5 Tighten lock nut carefully using an open-end wrench. Make sure notch adjustment screw does not shift position.

6 Repeat step 1 to step 5 on the second and third cavity.

14.3.2.1.2.4

Tuning Low Notch Loop Assemblies

Follow the procedure to tune Notch Loop Assemblies low.

Procedure:

1 Connect the millivoltmeter and signal generator to fourth cavity shown in the figure.

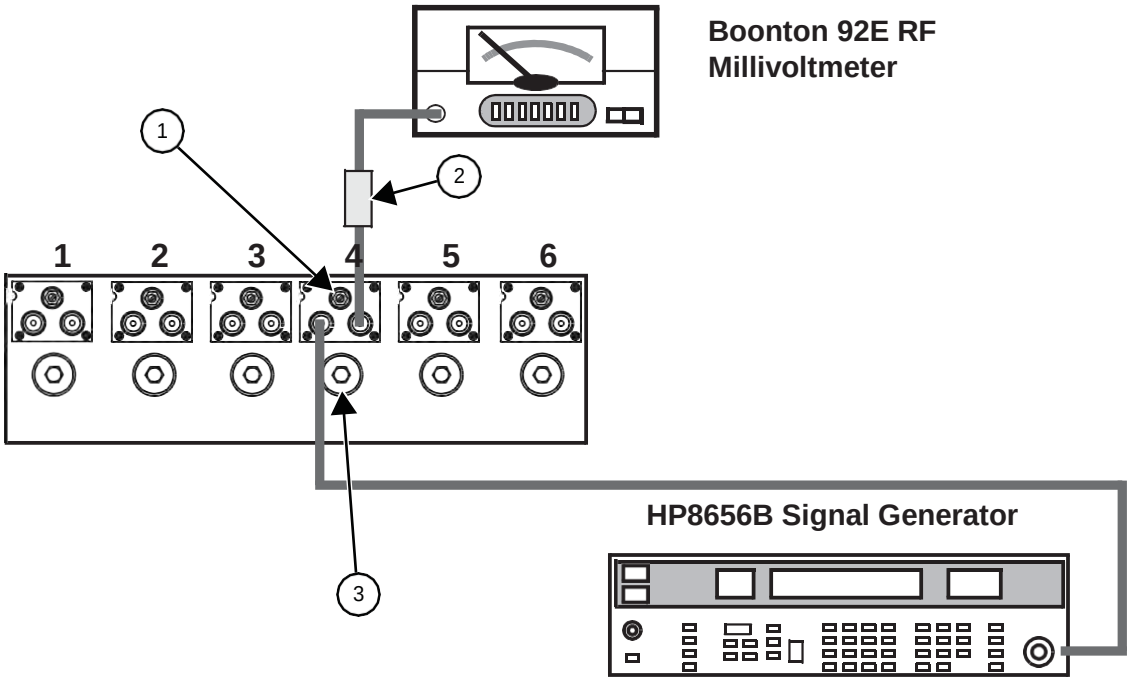

Label	Description
1	Notch Adjustment Screw and Lock Nut
2	6 dB In-line pad (50 Ω)
3	Pass Adjustment Screw and Lock Nut

2 Set millivoltmeter's range to +10 dBm.

3 Set signal generator's frequency to Rx or Tx, whichever is lower. And set output level to +10 dBm.

4 Adjust notch adjustment screw of the fourth cavity using a screwdriver to obtain a minimum reading on the millivoltmeter.

Reduce the range on the millivoltmeter as necessary to reach true minimum reading.

5 Tighten lock nut carefully using an open-end wrench. Make sure notch adjustment screw does not shift position.

6 Repeat step 1 to step 5 on the fifth and sixth cavity.

7 Reconnect the cables on the duplexer. Make sure that the cables are returned to their original position.

14.3.2.1.2.5

Verifying Insertion Loss

Follow the procedure to verify insertion loss.

Procedure:

1 Connect test equipment as shown in the figure.

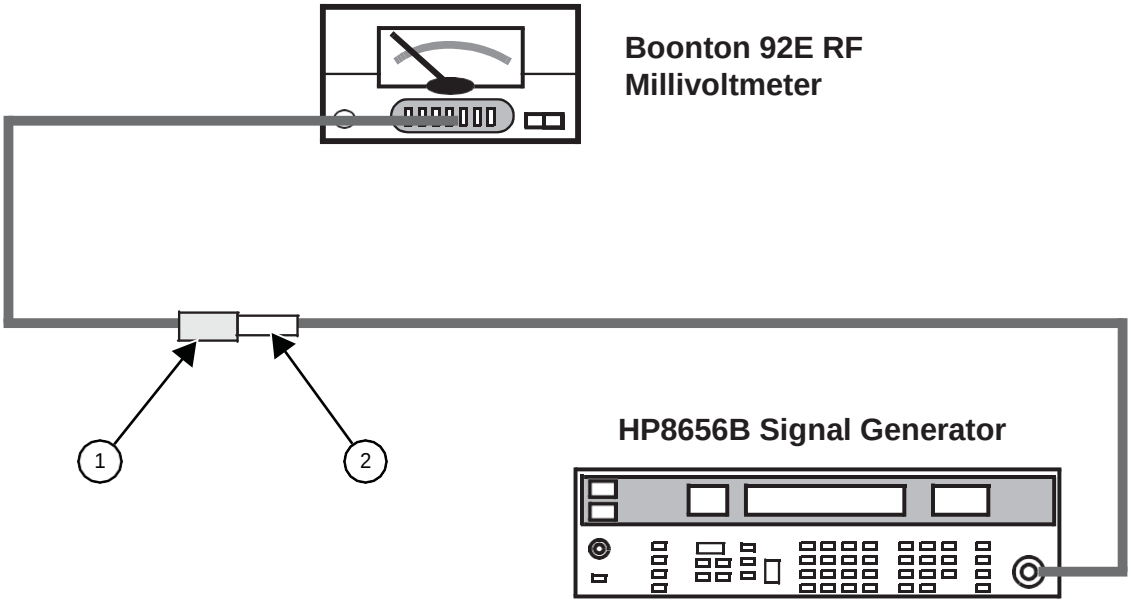

Label	Description
1	6 dB In-line pad (50 Ω)
2	UG349A N-to-BNC Connector

2 Set millivoltmeter's range to +10 dBm.

3 Set signal generator's frequency to Rx or Tx, whichever is higher. And set output level to +10 dBm.

4 Observe and note the level shown on the millivoltmeter.

5 Connect the duplexer cables and test equipment to the duplexer as shown.

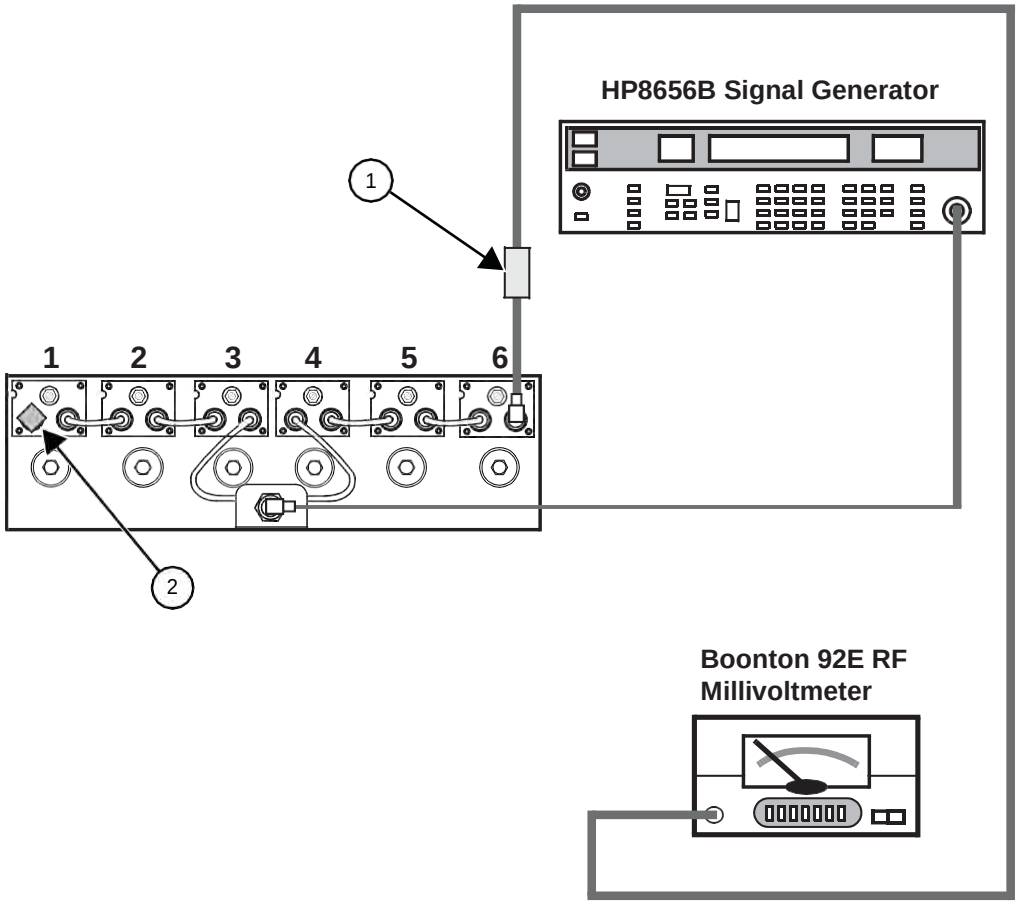

Label	Description
1	6 dB In-line pad (50 Ω)
2	50 Ω Terminator

6 Observe and note the level shown on the millivoltmeter.

7 Subtract the absolute number noted in step 4 from the number noted in step 6.

The difference should be less than 1.3 dB to meet specification for Insertion Loss.

8 Repeat step 1 to step 7 for Low Pass or High Notch cavities with the following exceptions:

- Set Frequency Generator to Rx or Tx frequency, whichever is lower.
- Connect Signal Generator to the first cavity (Low Pass duplexer input).
- Connect terminator to the sixth cavity.

14.3.2.1.2.6

Verifying Isolation

Follow the procedure to verify isolation.

Procedure:

1 Connect test equipment as shown in the figure.

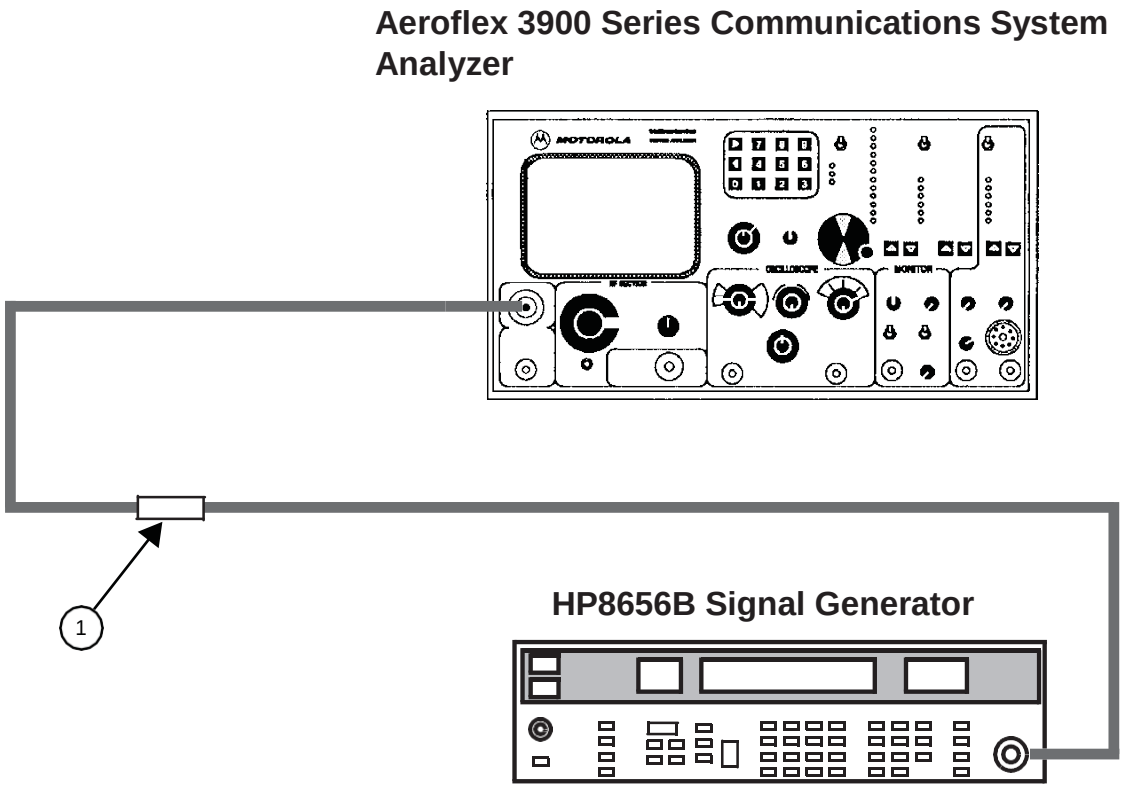

Label	Description
1	UG29A/U Bullet Connector

2 Set Communications System Analyzer's center frequency to Tx or Rx frequency, whichever is lower. And set attenuator to -50 dBm.

3 Set signal generator's frequency to Rx or Tx, whichever is lower, and set output level to +10 dBm.

4 Observe and note the level as shown on the display of the Communications System Analyzer.

5 Connect the test equipment to the duplexer as shown in the figure.

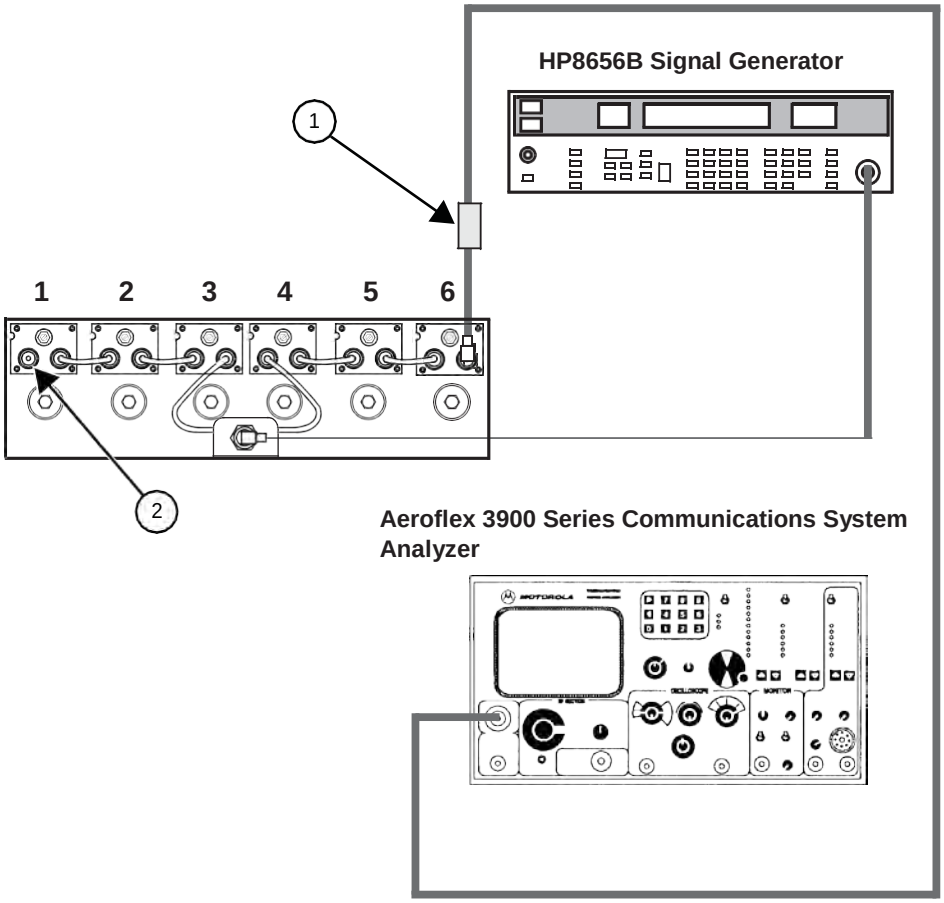

Label	Description
1	6 dB In-line pad (50 Ω)
2	50 Ω Terminator

6 Set Communications System Analyzer's attenuator to 0 dBm.

7 Observe and note the level shown on the Communications System Analyzer display.

If no number is displayed, consider isolation to be greater than 105 dB, which exceeds the specification.

8 Subtract the absolute number noted in step 7 from the number noted in step 4.

The difference should be higher than 100 dB to meet specification for Isolation.

9 Repeat step 1 to step 8 for Low Pass or High Notch cavities with the following exceptions:

- Set Frequency Generator and Communications System Analyzer to Rx or Tx frequency, whichever is higher.
- Connect Signal Generator to the first cavity (Low Pass duplexer input).
- Connect terminator to the sixth cavity.

14.3.2.1.2.7
Post-Tuning Checking

Follow the procedure to perform post-tuning checks.

Procedure:

1. Make sure all six notch adjustment lock nuts are tight.
2. Make sure all six pass adjustment lock nuts are tight.

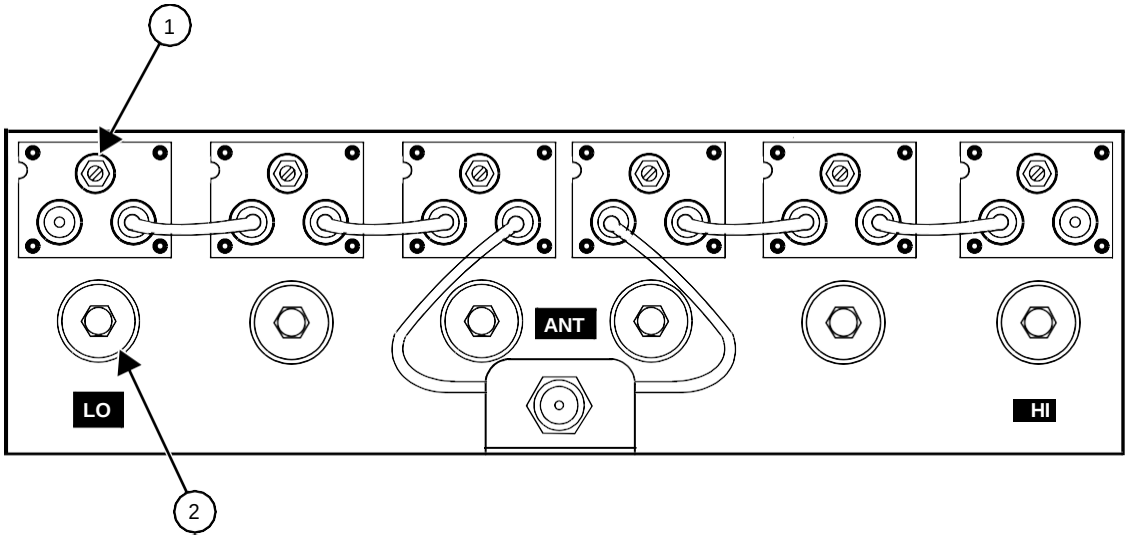

Label	Description
1	Notch Adjustment Lock Nut
2	Pass Adjustment Lock Nut

This completes the Duplexer Tuning Procedure (with basic instruments). To obtain a more precise calibration, see Duplexer Tuning Procedures (with Advanced Instruments) on page 184.

14.3.2.2
Duplexer Tuning Procedures (with Advanced Instruments)

Advanced tuning is used to perform LO Side, HI Side, and Fine tuning of the duplexer.

14.3.2.2.1
Setting Up the Duplexer

The following tasks show how you can initially setup the duplexer.

Procedure:

1. Power up the Network Analyzer (NWA), HP 8753C or equivalent. Based on whether it is VHF (U01, U02, U03) or UHF (U04, U05), the NWA has to be calibrated to the appropriate frequency sub-bands. See the following table.

Table 71: Frequency Range (U01, U02, U03, U04, U05)

	Frequency
U01	136–146 MHz

	Frequency
U02	144–160 MHz
U03	158–174 MHz
U04	403–435 MHz
U05	435–470 MHz

2 If the unit to be tuned is one of the VHF sub-bands, unscrew all the tuning screw caps (two each for the LO side cavities, and one each for the HI side cavities). Use a torque wrench to loosen the screws by the side of the tuning rods.

3 Adjust the NWA START frequency, STOP frequency, SPAN, and so on, based on the LO and HI frequencies which has to be tuned on the unit. Set the NWA source power to 10 dBm.

14.3.2.2.2
Tuning the LO Side

This procedure shows you how to tune the LO side.

When and where to use:

NOTICE: Please note that the duplexer tuning procedures of Tuning the LO Side on page 185, Tuning the HI Side on page 186, and Fine–Tuning the Duplexer on page 188 are applicable to UHF and VHF bands although the test frequencies represented in the following figures are for VHF bands.

CAUTION: Each Duplexer cable is unique and must be returned to the original position when removed. Use tape to label each end of each cable to ensure it is correctly replaced.

Procedure:

1 Perform one of the following actions:

If…	Then…
You have a UHF unit,	perform the following actions: **a** Connect the two N-type test cables hooked up on ports 1 and 2 of the NWA to the two N type female connectors of LO side Cavity 1. **b** Set up markers on the NWA-Marker 1 (m1) to LO frequency on CH1 (S11–Reflection) and Marker 2 (m2) to HI frequency on CH2 (S21– Transmission).
If you have a VHF unit,	Perform the following a actions: **a** Connect the two N-type NWA test cables hooked up on the ports 1, 2 to a T and connect it to LO Cavity 1. **b** Set up markers on the NWA-Marker 1 (m1) to LO Frequency on CH1 (S11–Reflection) and Marker 2 (m2) to HI Frequency on CH2 (S21–Transmission).

Initial NWA display may be similar to the following figure. Here the unit that is being tuned is a VHF unit, and the LO freq: 144 MHz, HI freq: 145.5 MHz.

Figure 130: Untuned LO SIDE–Cavity 1

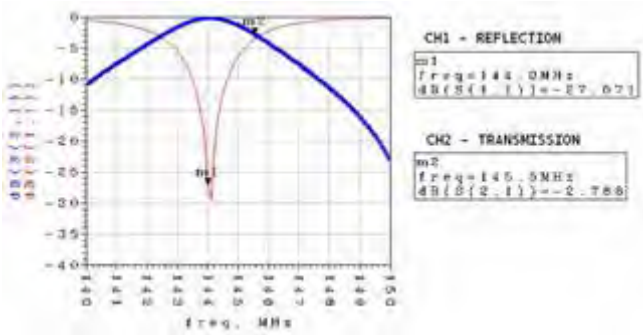

2 Turn the notch screw until Marker 1 falls in the dip of the CH1 curve as shown in the following figure. Lightly tighten the locknut in place to prevent further movement.

Figure 131: Tuned CH1 - LO SIDE–Cavity 1

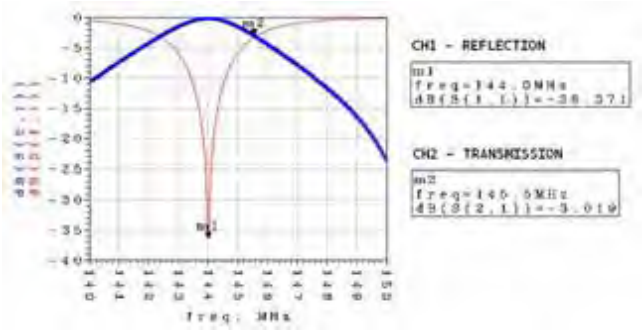

3 Turn the pass screw until Marker 2 falls in the dip of the CH2 curve as shown in the following figure. Lightly tighten the locknut in place to prevent further movement.

Figure 132: Tuned CH1, CH2 - LO SIDE–Cavity 1

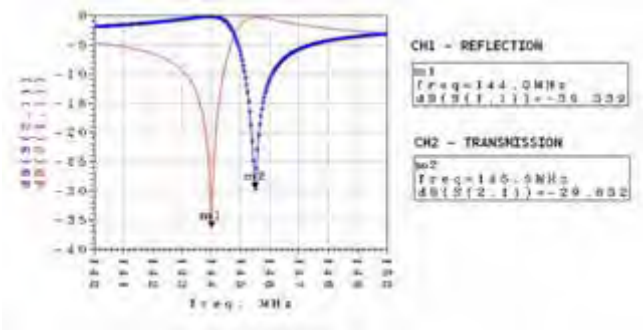

4 Do not change the settings on the network analyzer, just repeat Step 1, 2, and 3 for the other LO cavities 2 and 3 on the left.

14.3.2.2.3
Tuning the HI Side

The following tasks show you how to tune the HI side.

Procedure:

1 Perform one of the following actions:

If…	Then…
You have a UHF unit,	perform the following actions: **a** Connect the two N-type test cables hooked up on the ports 1,2 of the NWA to the two N type female connectors of HI cavity 4. **b** Set up markers on the NWA-Marker 1 to HI Frequency on CH2 (S21–Transmission) and Marker 2 to LO Frequency on CH1 (S22–Reflection).
If you have a VHF unit,	perform the following actions: **a** Connect the two N-type NWA test cables hooked up on the ports 1, 2 to a T and connect it to HI cavity 4. **b** Set up markers on the NWA-Marker 1 to HI Frequency on CH2 (S21–Transmission) and Marker 2 to LO Frequency on CH1 (S22–Reflection).

Initial NWA display may be similar to the following figure. Here the unit that is being tuned is a VHF unit and the LO freq: 144 MHz, HI freq: 145.5 MHz.

Figure 133: Untuned HI SIDE–Cavity 4

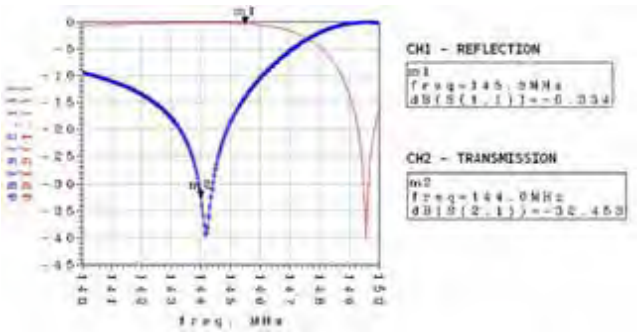

2 Turn the notch screw until Marker 1 falls in the dip of the CH1 curve as shown in the following figure. Lightly tighten the locknut in place to prevent further movement.

Figure 134: Tuned CH1 - HI SIDE–Cavity 4

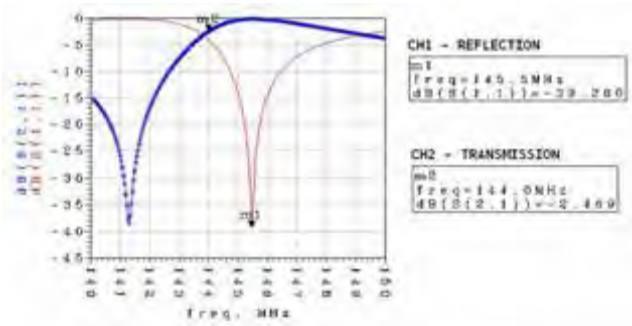

3 Turn the pass screw until Marker 2 falls in the dip of the CH2 curve as shown in the following figure. Lightly tighten the locknut in place to prevent further movement.

Figure 135: Tuned CH1, CH2 - HI SIDE–Cavity 4

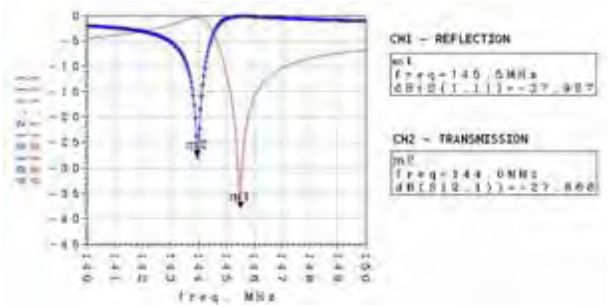

Do not change the settings on the network analyzer, just repeat Step 5, 6, and 7 for the other HI cavities 5 and 6 on the right.

14.3.2.2.4
Fine–Tuning the Duplexer

The following tasks show how you can fine tune the duplexer.

Procedure:

1 When all six cavities have been tuned separately, connect the Port 1 NWA cable to the N connector of the LO side input cavity (cavity 1) and the Port 2 of NWA to the duplexer Antenna port (ANT) respectively.

a Connect ports 1 and 2 of the NWA to the LO input side (far left) and ANT, respectively.

The desired response on the NWA for m1 (return loss), m2 (insertion loss), and m3 (noise suppression) is as shown in the following figure.

Figure 136: LO Side Response Curves

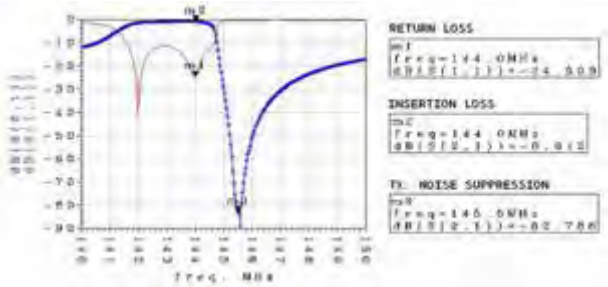

b Connect ports 1 and 2 of the NWA to the ANT and the HI input side (far right), respectively.

The desired response on the NWA for the m1 (return loss), m2 (insertion loss), and the m3 (noise suppression) markers is as shown in the following figure.

Figure 137: HI Side Response Curves

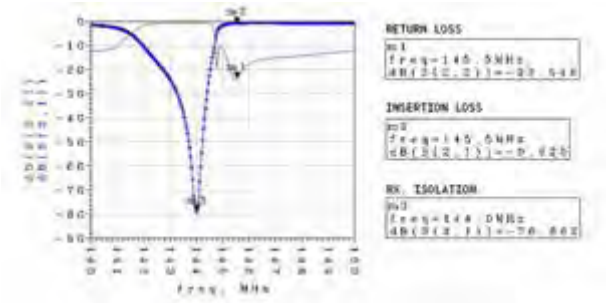

2 If all the specification limits are met with some margin, stop tuning the unit any further.

With caution, fine tuning of the tuning notch and pass, and tuning screws can be done to improve the performance further in cases where the response seems to be marginal. This is more significant in cases where the T/R spacing is 1.5 MHz or lower. For the sample shown, fine tuning was done to improve the performance slightly, as shown by comparing Figure 136: LO Side Response Curves on page 188 to Figure 138: After Fine Tuning–LO Side Response Curves on page 189 and Figure 137: HI Side Response Curves on page 189 to Figure 138: After Fine Tuning–LO Side Response Curves on page 189.

Figure 138: After Fine Tuning–LO Side Response Curves

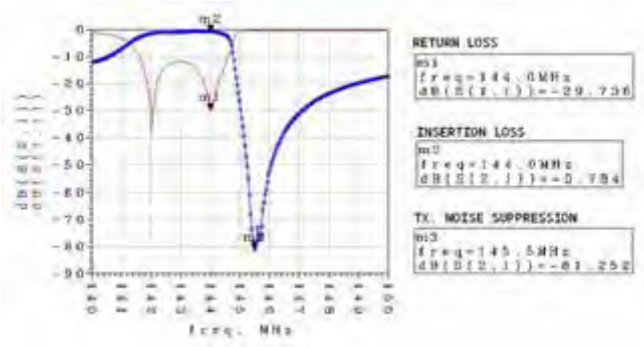

Figure 139: After Fine Tuning–HI Side Response Curves

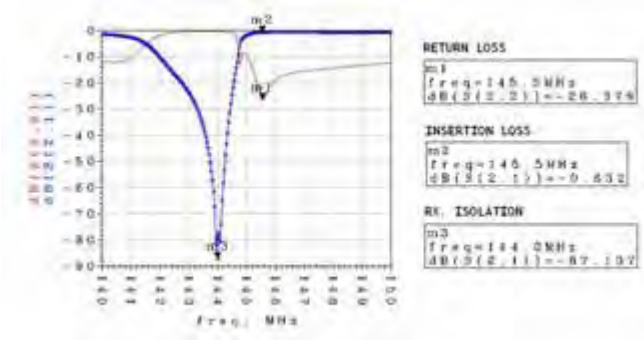

3 Tighten the six notch adjustment lock nuts and the six pass adjustment lock nuts. See the following figure for the post-tuning checks.

Figure 140: UHF Duplexer Field Tuning Procedure (continued)

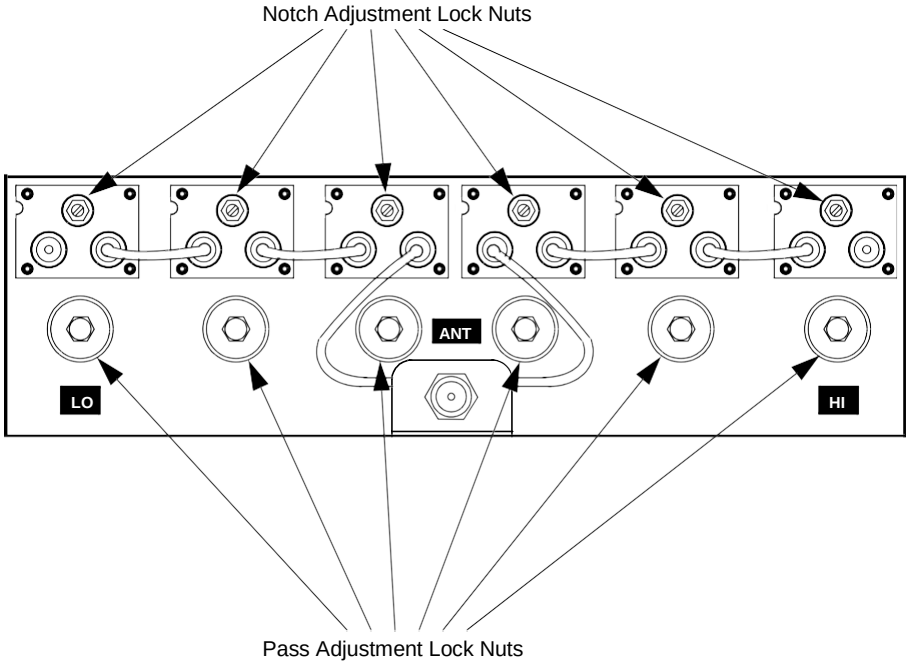

This completes the Duplexer Tuning Procedure with advanced instruments.

Appendix A

Accessories

A.1
Introduction

Motorola Solutions provides the following approved accessories to improve the productivity of the SLR 8000 Base Station/Repeater.

For a list of Motorola Solutions-approved accessories, visit the following web site: http://www.motorolasolutions.com.

A.1.1
Cables

Part No.	Description
3082933N08	Power Cord, US
PMKN4167_	Battery Charger Cable
CB000057A03	Wireline to Modem Flex Cable
CB000059A01	Preselector Rx Output Cable
CB000062A01	Antenna Relay Power Cable
CB000063A01	Rear Panel to Circulator Tray Cable (load temp alarm)
3013942M07	Antenna Relay Tx Cable
3013943E08	Antenna Relay Rx Cable

A.1.2
Documentation

Part No.	Description
6880309T12	MOTOTRBO System Planner
MN002732A01	Capacity Max System Planner
6801200069	Hi-Power Repeater Safety Leaflet
9880384V83	CDROM for R56 manual
PMLN7401_	SLR 8000 CDROM (BSIM)

A.1.3
Duplexer

Part No.	Description
PMLE5152_	Duplexer Hardware Kit

A.1.4
Mounting

Part No.	Description
PMLN7478_S	Mounting Hardware Service Kit
BR000020A01	Mounting Ears
BR000050A01	Front Bezel Mounting Clip

A.1.5
Preselectors

Part No.	Description
PMLD4819_S	VHF Preselector, 136–154 MHz
PMLD4820_S	VHF Preselector, 150–174 MHz
PMLE5124_S	UHF Preselector, 350–470 MHz
3082059X02	Tuning Probe

A.1.6
Service Kits

Part No.	Description
PMTD1360_S	SLR 8000 VHF PA Service Kit
PMTE4000_S	SLR 8000 UHF PA Service Kit
PMTF4511_S	SLR 8000 800–900 MHz PA Service Kit
PMTD4014_S	SLR 8000 VHF Modem Service Kit
PMTE4032_S	SLR 8000 UHF Modem Service Kit
PMTF4510_S	SLR 8000 800–900 MHz Modem Service Kit
PMPN4053_S	SLR 8000 Power Supply Unit Service Kit
PMLN6822_S	SLR 8000 Front Panel Service Kit
PMLN7450_	SLR 8000 Fan Assembly Service Kit
PMLN6730_S	SLR 8000 Wireline Card Service Kit
PMLN7092_S	SLR 8000 Antenna Relay Service Kit
PMLD4836_	SLR 8000 VHF 136–146 MHz Circulator Service Kit
PMLD4837_	SLR 8000 VHF 144–160 MHz Circulator Service Kit
PMLD4838_	SLR 8000 VHF 158–174 MHz Circulator Service Kit
PMLE5153_	SLR 8000 UHF 403–470 MHz Circulator Service Kit
PMLF4211_	SLR 8000 800 MHz Circulator Service Kit
PMFD4000_	VHF Duplexer, 136–146 MHz
PMFD4001_	VHF Duplexer, 144–160 MHz

Part No.	Description
PMFD4002_	VHF Duplexer, 158–174 MHz
PMFE4000_	UHF Duplexer, 403–435 MHz
PMFE4001_	UHF Duplexer, 435–470 MHz
PMLF4212_	Duplexer 800 MHz

A.1.7
Service Parts

Part No.	Description
0185172Y03	UHF Cicrulator
0185172Y07	VHF Circulator 132–146 MHz
0185172Y01	Isolator Assembly 746–870 MHz
0185172Y06	VHF Circulator 144–160 MHz
0185172Y05	VHF Circulator 158–174 MHz
9185856Y01	UHF Low Pass Filter
9185856Y03	VHF Low Pass Filter
9185856Y02	800 MHz Low Pass Filter
0185172Y10	RF Load

A.1.8
Service Tools

Part No.	Description
PMKN4166_	Test Cable (for test box and external speaker)
30009477001	USB A to USB B Cable (for programming)
RLN4460_	Test Box
N/A	Aeroflex 3900 Series Communications System Analyzer
N/A	Keysight E5062A/E5071B/E5071C Network Analyzer
RVN5115_	Portable, Mobile and Repeater Customer Programming Software (CPS) Package

A.1.9
Microphone

Part No.	Description
GMMN4063_	Microphone, RJ45

A.1.10
Miscellaneous

Part No.	Description
HW000190A01	Front Panel Thermal Pad
LB000303A01	Wireline I/O Label

Appendix B

Replacement Parts Ordering

B.1
Replacement Parts Ordering

This section describes ways you can place your orders for the replacement parts.

B.1.1
Basic Ordering Information

Some replacement parts, spare parts, and/or product information can be ordered directly.

While parts may be assigned with a Motorola Solutions part number, this does not guarantee that they are available from Motorola Solutions Radio Products and Solutions Organization (RPSO). Some parts may have become obsolete and no longer available in the market due to cancellations by the supplier. If no Motorola Solutions part number is assigned, the part is normally not available from Motorola Solutions, or is not a user-serviceable part. Part numbers appended with an asterisk are serviceable by Motorola Solutions Depot only.

B.1.2
Motorola Solutions Online

This section describes ways you can place your orders for the replacement parts.

Motorola Solutions Online users can access our online catalog at https://businessonline.motorolasolutions.com.

To register for online access:

- Have your Motorola Solutions Customer number available.
- Go to https://businessonline.motorolasolutions.com and click **Sign Up Now**.
- Complete the form and submit it.
- Or, call 1-800-422-4210 (for U.S. and Canada Service Centers only).

Contact your BDM to complete the set-up. Registration is completed within 24 to 48 hours.

B.1.3
Mail Orders

Mail orders are only accepted by the US Federal Government Markets Division (USFGMD).

Motorola
7031 Columbia Gateway Drive
3rd Floor – Order Processing
Columbia, MD 21046
U.S.A.

B.1.4
Telephone Orders

Radio Products and Solutions Organization (see note)

(United States and Canada)
7:00 AM to 7:00 PM (Central Standard Time)
Monday through Friday (Chicago, U.S.A.)
1-800-422-4210
1-847-538-8023 (United States and Canada)

U.S. Federal Government Markets Division (USFGMD)
1-877-873-4668
8:30 AM to 5:00 PM (Eastern Standard Time)

B.1.5
Fax Orders

Radio Products and Solutions Organization (see note)
(United States and Canada)
1-800-622-6210
1-847-576-3023 (United States and Canada)

USFGMD
(Federal Government Orders)
1-800-526-8641 (For Parts and Equipment Purchase Orders)

B.1.6
Parts Identification

Radio Products and Solutions Organization (see note)
(United States and Canada)
1-800-422-4210

NOTICE: The Radio Products and Solutions Organization (RPSO) was formerly known as the Radio Products Services Division (RPSD) and/or the Accessories and Aftermarket Division (AAD).

B.1.7
Product Customer Service

Radio Products and Solutions Organization (United States and Canada)
1-800-927-2744

Appendix C

Motorola Solutions Service Centers

C.1
Motorola Solutions Service Centers

This section lists the Motorola Solutions service centers for testing, troubleshooting, and service.

C.1.1
Servicing Information

If a unit requires further complete testing, knowledge and/or details of component level troubleshooting or service than is customarily performed at the basic level, send the radio to a Motorola Solutions Service Center as listed or your nearest Authorized Service Center.

C.1.2
Motorola Solutions Service Center

Motorola Elgin Repair Depot
2214 Galvin Drive
Elgin, IL
60124
Tel: 800-442-4210

C.1.3
Motorola Solutions Federal Technical Center

10105 Senate Drive
Lanham, MD 20706
Tel: 1-800-969-6680
Fax: 1-800-784-4133

C.1.4
Motorola Solutions Canadian Technical Logistics Center

181 Whitehall Drive
Markham, Ontario
L3R 9T1
Toll Free: 800-543-3222

Appendix D

SLR 8000 Third-Party Controllers

D.1
Overview

The SLR 8000 Base Station/Repeater is capable of interfacing to a number of third party controllers via the four-wire and GPIO/GPI interface afforded by the back panel AUX connector. This section covers the connections and signal levels between the third party controllers and the base station/repeater, as well as the audio path configuration needed via CPS. Note that this section is not a substitute for a more comprehensive instruction detailed in the vendor's manuals of their respective third party controllers.

The third party controllers supported by SLR 8000 Base Station/Repeater are as follows:

- Community Repeater Panel (Zetron Model 38-Max)
- Phone Patch (Zetron Model 30)
- Tone Remote Adapter (Motorola Solutions Model L3276)
- LTR (Trident Model Raider and Marauder)
- Passport (Trident Model NTS) (see Note)

CAUTION: Do not hot swap any of the third party controllers as this could (at a minimum) cause a malfunction with the base station/repeater.

NOTICE: The SLR 8000 Base Station/Repeater only support the third party controllers noted above when it is configured in analog mode. The screen capture below shows the CPS location to configure the SLR 8000 Base Station/Repeater for analog mode.
If the third party controllers are supplied power by the SLR 8000 Base Station/Repeater, then the SLR 8000 Base Station/Repeater needs to be in a powered off state when establishing (or removing) the connection to the SLR 8000 back panel connector.

Figure 141: CPS Settings to Configure SLR 8000 Base Station/Repeater for Analog Mode

D.2

Community Repeater Panel

The SLR 8000 Base Station/Repeater is capable of Multi Coded Squelch through the Zetron Model 38 Repeater Panel. The Model 38 Repeater Panel interconnects to the base station/repeater and provides 38 PL tones and 22 DPL tones standard.

See the *Zetron Model 38 Repeater Panel Instruction* manual (supplied with the panel) for panel specifications, operation, installation, alignment, programming, and repair information.

Figure 142: Model Zetron 38 Repeater Panel

D.2.1

Compatibility

The Zetron Model 38 Repeater Panel is compatible for all versions of the SLR 8000 Base Station/ Repeater software and hardware.

D.2.2

Hardware Connections

The connections between the SLR 8000 Base Station/Repeater and the community repeater panel are facilitated with a multi-conductor cable connected between the SLR 8000 back panel AUX 25-Pin connector and that of the community repeater panel. The connection provides the following signals:

- Transmit Audio
- Receiver Audio
- Push-to-talk (PTT)
- Carrier Operated Relay (COR)
- 13.6 VDC nominal

  NOTICE: If this connection is used, the external equipment must draw less than 1 A.

- Ground
  Signal connections are noted in Figure 141: CPS Settings to Configure SLR 8000 Base Station/ Repeater for Analog Mode on page 198. The SLR 8000 connector and physical Pin locations are noted in the backplane interface board section of this manual. See Zetron Model 38 Repeater Panel manual for its connector and physical Pin locations. The part number for a pre-fabricated cable is noted in the SLR 8000 ordering guide.

Figure 143: Signal Connections between SLR 8000 Base Station/Repeater and Community Repeater Panel

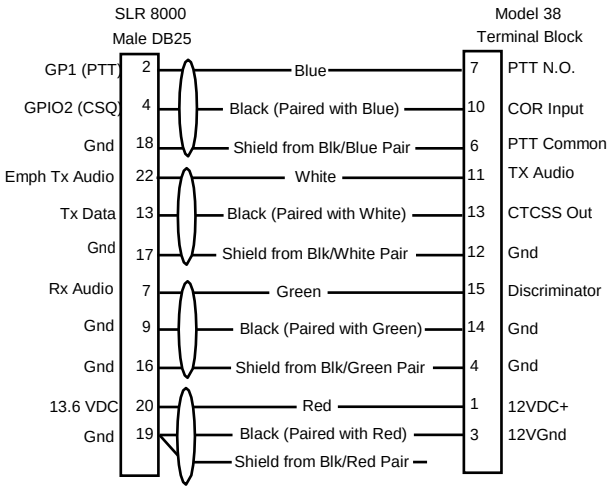

D.2.3
CPS Configuration

The SLR 8000 Base Station/Repeater will need to be configured via the CPS application as shown in the following figures. More specifically, the affected parameters are as follows:

- Audio Type
  - Flat Unsquelched
- Disable Repeat Path
  - Checked
- GPIO Pin number 2, 11
  - Ext PTT
  - Active Low
- GPIO Pin number 4
  - Carrier Squelch (CSQ) Detect
  - Active High
- Squelch Type (Rx)
  - CSQ
- Squelch Type (Tx)
  - CSQ

Figure 144: CPS Configuration for Community Repeater Panel (1 of 2)

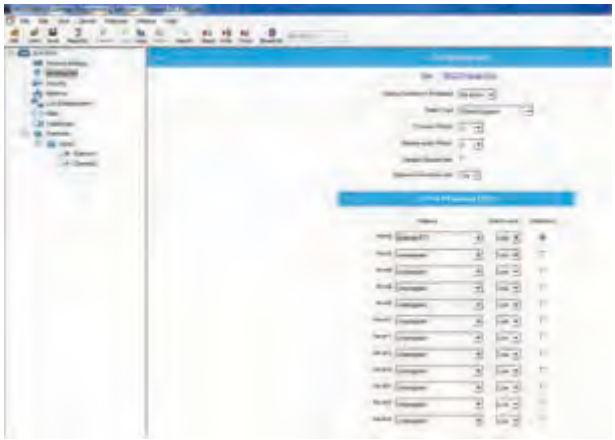

Figure 145: CPS Configuration for Community Repeater Panel (2 of 2)

D.2.4

Community Repeater Panel Settings

The input and output levels should be adjusted per the community repeater panel's instructions. The following sections give a brief overview of the high level characteristics and community repeater panel settings for configuration with the SLR 8000 Base Station/Repeater.

D.2.4.1

Discriminator

The Receiver audio yields 330mV rms into 50 kΩ with an RF input signal deviating at 60% RSD. With the community repeater panel's own loading impedance, the "Discriminator" signal delivered to the community repeater panel is at a high enough drive level to leave the community repeater panel's "Rx Audio Gain High/Low" switch in the factory default position (back panel Switch 1).

NOTICE: Under the System Programming, turn on the DCS Rx data.

D.2.4.2
Tx Audio

The transmitter yields 60% RSD with 80 mV rms into the Emph Tx Audio port. The "Tx Audio" signal delivered by the community repeater panel is at a high enough drive level to leave the community repeater panel's "Tx Audio Gain High/Low" switch in the factory default position (back panel Switch 4).

NOTICE: Under the System Programming, turn on the DCS Tx data.

D.2.4.3
Continuous Tone-Controlled Squelch Systems (CTCSS) Out

The transmitter yields 60% RSD with 80 mV rms into the Tx Data port.

The "CTCSS" signal delivered by the community repeater panel is at a high enough drive level to leave the community repeater panel's "Encode gain high/low" switch in the factory default position (back panel Switch 3).

D.2.4.4
Tx Audio Pre-Emphasis

Set the "Encode flat/De-emphasized" switch to the Up position on the community repeater panel.

D.2.4.5
Carrier Operated Relay (COR)

Configure the specified back panel switches on the community repeater panel as follows:

- Switch 6 "COR source internal/external" (set to the Down position).
- Switch 7 "COR polarity positive/negative" (set to the Up position).
- Switch 8 "COR pull-up on/off" (set to the Up position).

D.3
Phone Patch

The SLR 8000 Base Station/Repeater is capable of multi-mode telephone interconnect through the Zetron Model 30 Phone Patch. The Zetron Model 30 Phone Patch interconnects to the base station/repeater and allows users to initiate and receive land line telephone calls through the subscriber radios.

When properly configured, subscribers can initiate and answer telephone calls. Through selective signaling, calls from land line users can be directed to any subscriber or to a specific user. Additionally, access control is also afforded by the Zetron Model 30 Phone Patch.

See the *Zetron Phone Patch* manual (supplied with the phone patch) for specifications, operation, installation, alignment, programming, and repair information.

Figure 146: Zetron Model 30 Phone Patch

D.3.1

Compatibility

Zetron Model 30 Phone Patch is compatible for all versions of SLR 8000 Base Station/Repeater software and hardware.

D.3.2

Hardware Connections

The connections between the SLR 8000 Base Station/Repeater and the phone patch are facilitated with a multi-conductor cable connected between the J7 SLR 8000 back panel Aux 25-Pin connector and that of the phone patch. The connection provides for the following signals:

- Transmit Audio
- Receiver Audio
- PTT
- COR
- 13.6 VDC Nominal (see Note)
- Ground

NOTICE: If this connection is used, the external equipment must draw less than 1 A.

Signal connections are noted in Figure 142: Model Zetron 38 Repeater Panel on page 199. The SLR 8000 Base Station/Repeater connector and physical Pin locations are noted in the backplane interface board section of this manual. See Zetron Model 30 manual for its connector and physical Pin locations. The part number for a pre-fabricated cable is noted in the SLR 8000 ordering guide.

Figure 147: Signal Connections between SLR 8000 Base Station/Repeater and Zetron Model 30 Phone Patch (Analog Phone Patch Cable and Digital Phone Patch Cable)

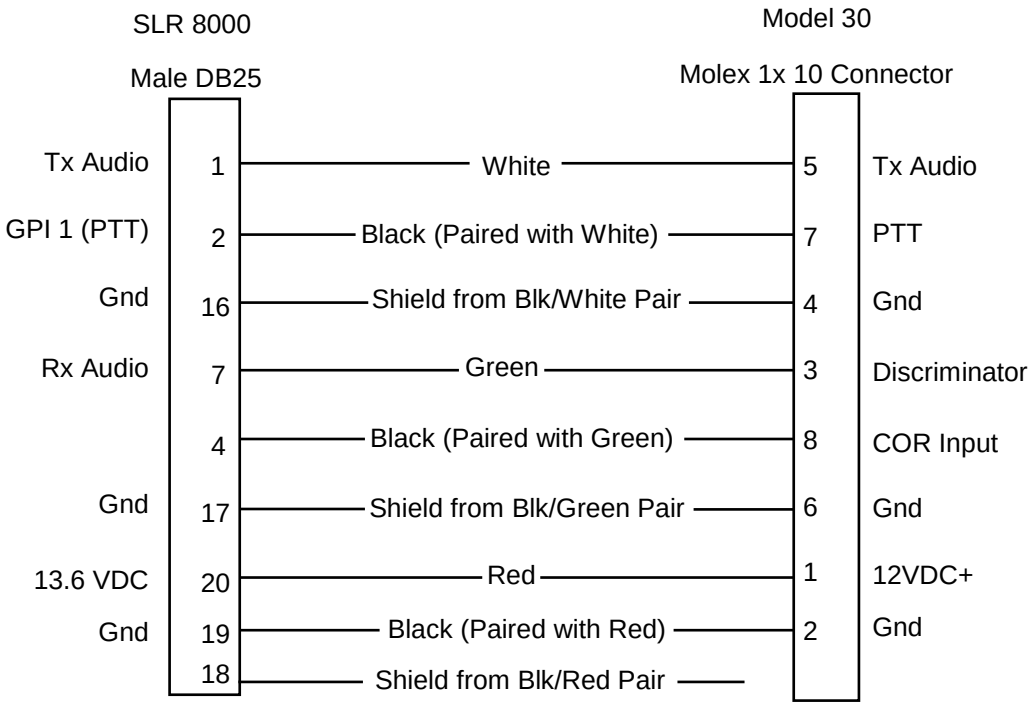

D.3.3
CPS Configuration

The SLR 8000 Base Station/Repeater will need to be configured via the CPS application as shown in the following figures. More specifically, the affected parameters are as follows:

- Audio Type
  - Filtered Squelch
- Analog Accessory Emphasis
  - De & Pre
- Disable Repeat Path
  - Un-Checked
- Tx Audio Priority
  - 0
- GPIO Pin number 2, 11
  - Ext PTT
  - Active Low
- GPIO Pin number 4
  - PL/Talkgroup Detect
  - Active Low
- Squelch Type (Rx)
  - TPL
- Squelch Type (Tx)
  - TPL

Figure 148: CPS Configuration for Phone Patch (1 of 2)

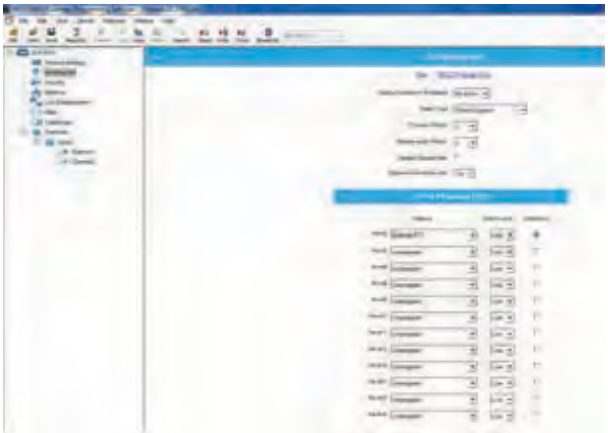

Figure 149: CPS Configuration for Phone Patch (2 of 2)

D.3.4

Phone Patch Level Settings

The input and output levels should be adjusted per the phone patch's instructions. The following summary gives a brief overview of the high level characteristics and phone patch settings for configuration with the SLR 8000 Base Station/Repeater.

Disc

The Receiver audio yields 330 mV rms into 50 kΩ with an RF input signal deviating at 60% RSD.

With the phone patch's own loading impedance, the "Disc" signal delivered to the phone patch is at a high enough drive level to leave jumper JP1 in the factory default position (position A).

Tx Audio

The transmitter yields 60% RSD with 80 mV rms into the Tx Audio port.

The "Tx Aud" signal delivered by the phone patch is at a high enough drive level to leave jumper JP3 in the factory default position (position B).

CTCSS/ DCS DECODE INPUT/ COR

Set the jumpers on the phone patch as follows:

- Set jumper JP6 to position A, to match the base station/receiver's active low indication of a PL/DPL detect.
- Set jumper JP7 to position B, to external squelch indication.
- Set jumper JP8 to position C, to match the base station/repeater's active low indication of a COR detect.

D.4

Tone Remote Adapter

When a dispatch console or deskset sends out signals to a remote repeater, it does so over a Wireline.

Two types of signals are sent:

- Audio signal
- Command signals (function tones) that are used to perform the remote control functions.

The SLR 8000 Base Station/Repeater decodes function tones sent over a Wireline from a remote analog deskset or console through the Motorola Solutions Tone Remote Adapter (Model L3276). When properly configured, the Tone Remote Adapter performs the following functions with the base station/ repeater:

- Transmit and Receive Audio
- PTT
- Monitor
- Channel Select (up to 15 frequencies)
- Wildcard (such as, Repeater Knockdown)

See Motorola Solutions Tone Remote Adapter Manual (supplied with the Tone Remote Adapter) for specifications, operation, installation, alignment, programming, alternate configurations, and repair information.

Figure 150: Model L3276 Tone Remote Adapter

D.4.1

Tone Remote Adapter Compatibility

Model L3276 Tone Remote Adapter is compatible for all versions of SLR 8000 Base Station/Repeater software and hardware.

D.4.2

Hardware Connections

The connections between the SLR 8000 Base Station/Repeater and the Tone Remote Adapter are facilitated with a multi-conductor cable connected between the J7 SLR 8000 back panel AUX 25-Pin connector and that of the Tone Remote Adapter. The connection provides for the following signals:

- Transmit Audio
- Receiver Audio
- PTT
- COR
- Monitor
- Channel Steering
- Wild Card (such as Repeater Knockdown)
- Ground

Signal connections are noted in Figure 143: Signal Connections between SLR 8000 Base Station/ Repeater and Community Repeater Panel on page 200. SLR 8000 Base Station/Repeater connector and physical Pin locations are noted in the backplane interface board section of this manual. See Motorola Solutions L3276 25-Pin manual for its connector and physical Pin locations. The part number for a pre-fabricated cable is noted in the SLR 8000 ordering guide.

Figure 151: Signal Connections Between SLR 8000 Base Station/Repeater and Motorola Solutions L3276 25-Pin Connector for a 15-Channel Remote Control

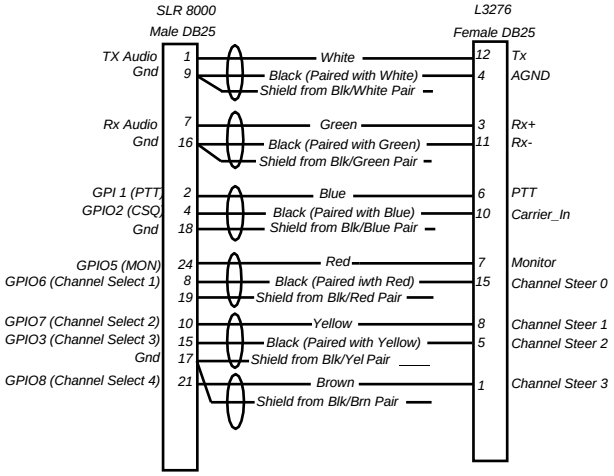

D.4.3
CPS Configuration (For a 15 Channel Remote Control)

The SLR 8000 Base Station/Repeater will need to be configured through the CPS application as shown in the following figure. More specifically, the affected parameters are as follows:

- Audio Type
  - Filtered Squelch
- Analog Accessory Emphasis
  - De & Pre
- Disable Repeat Path
  - Un-Checked or Checked
- Tx Audio Priority
  - Set to 0 for console priority
- GPIO Pin number 2, 11
  - Ext PTT
  - Active Low
- GPIO Pin number 4
  - CSQ Detect or PL/Talk group Detect
  - Active Low
- GPIO Pin number 24
  - Monitor
  - Active Low
- GPIO Pin number 8, 25
  - Channel Select 1
  - Active Low
- GPIO Pin number 10, 12
  - Channel Select 2

- Active Low
- GPIO Pin number 15
  - Channel Select 3
  - Active Low
- GPIO Pin number 21
  - Channel Select 4
  - Active Low

Figure 152: CPS Configuration for L3276 Tone Remote Adapter (For a 15-Channel Remote Control)

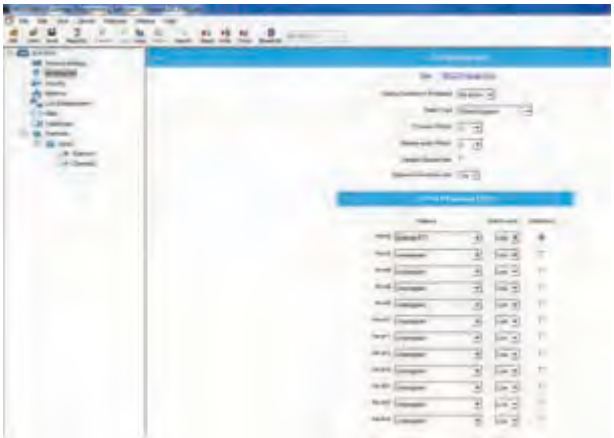

NOTICE: The above configuration is considered typical. The L3276 Remote Tone Adapter provides alternate configurations that are supported by SLR 8000 Base Station/Repeater as well. See L3276 Remote Tone Adapter Manual for additional details.

D.4.4
Tone Remote Adapter Settings

The input and output levels of the Tone Remote Adapter should be adjusted per the Tone Remote Adapter’s instructions. The following sections give a brief overview of the high-level characteristics and typical Tone Remote Adapter settings for configuration with the SLR 8000 Base Station/Repeater.

D.4.4.1
Radio Rx

The Receiver audio yields 330 mV rms into 50 kΩ with an RF input signal deviating at 60% RSD. With the Remote Tone Adapter's own loading impedance, the "Radio Rx" signal delivered to the phone

patch is at a high enough drive level to leave jumper S10 in the factory default position (position is "out").

D.4.4.2
Radio Tx

The transmitter yields 60% RSD with 80mV rms into the Tx Audio port. The “Radio Tx” signal delivered by the Remote Tone Adapter is at a high enough drive level to leave jumper S9 in the factory default position (position A).

D.4.4.3
Channel Steering

Leave jumper S7 in position B (factory default) to match the active low setting for the Channel Steering 1, Channel Steering 2, Channel Steering 3, and Channel Steering 4 GPIO signaling.

D.4.4.4
Monitoring

Leave jumper S8 in the “IN” position (factory default) to match the active low setting for the Monitor GPIO signaling.

D.4.4.5
PTT

Leave jumper S5 in the “IN” position (factory default) to match the active low setting for the PTT GPIO signaling.

D.4.4.6
Wildcard 1 (optional)

Leave jumper S6 in position A (factory default) to match the active low setting for the Repeater Disabled GPIO signaling.

D.5
Trunking Controllers

The SLR 8000 Base Station/Repeater is capable of supporting LTR trunking operations with the Trident’s Marauder and Raider controllers. Additionally, the base station/repeater also supports Passport trunking as well with Trident’s NTS controller.

See the respective Trident Instruction Manuals (supplied with the controllers) for specifications, operation, installation, alignment, programming, and repair information.

Figure 153: Model Trident’s Marauder

Figure 154: Model Trident's Raider

Figure 155: Model Trident's NTS

D.5.1
Compatibility

Trident Model Raider, Marauder and NTS are compatible for all versions of SLR 8000 Base Station/ Repeater software and hardware.

D.5.2
Hardware Connections

The connections between the SLR 8000 Base Station/Repeater and the trunking controllers are facilitated with a multi-conductor cable connected between the J7 base station/repeater back panel AUX 25-Pin connector and that of the connector on the trunking controller. The connection provides for the following signals:

- Transmit Audio
- Transmit Data
- Receiver Audio
- PTT
- 13.6 VDC (see Note)
- Ground

NOTICE: If this connection is used, the external equipment must draw less than 1 A. This connection is not supported for the NTS controller.

Signal connections are noted in Figure 144: CPS Configuration for Community Repeater Panel (1 of 2) on page 201. The base station/repeater connector and physical Pin locations are noted in the

backplane interface board section of this manual. See the Trident manuals for their respective connector and physical Pin locations. The part number for a
pre-fabricated cable is provided in the respective Trident manuals.

Figure 156: Signal connections between SLR 8000 Base Station/Repeater, Trident Model Raider, Marauder, and NTS

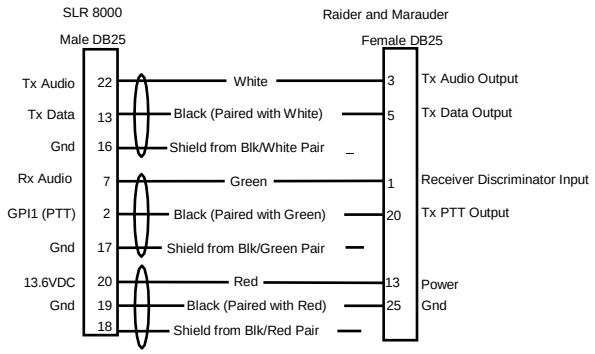

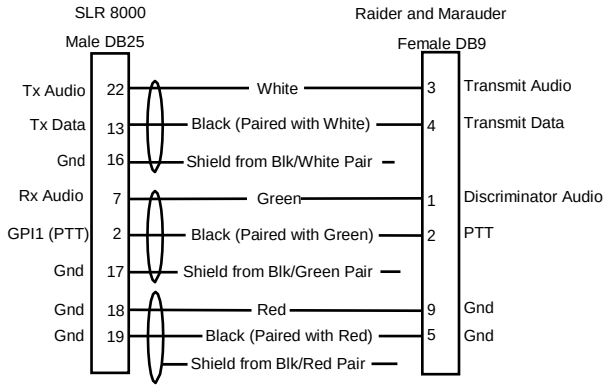

D.5.3
CPS Configuration

The SLR 8000 Base Station/Repeater requires configuration through the CPS application as shown in the following figure. More specifically, the affected parameters are as follows:

- Audio Type
  - Flat Unsquelched
- Disable Repeat Path
  - Checked
- GPIO Pin number 2
  - Ext PTT
  - Active Low

Figure 157: CPS Configuration for Trident Model Raider, Marauder and NTS

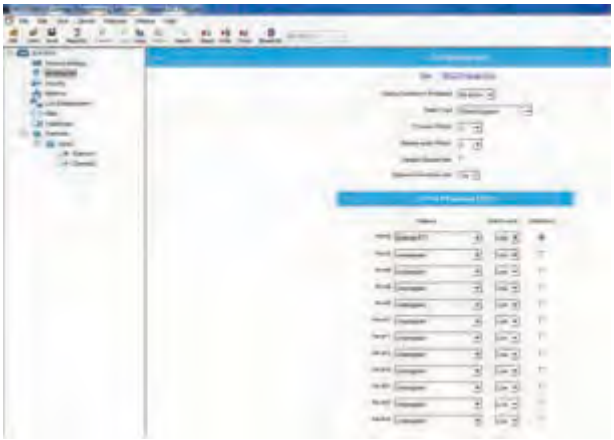

D.5.4

Trunking Controller Settings

The input and output levels should be adjusted per the trunking controller's instructions. The following sections give a brief overview of the high level characteristics and trunking controller settings for configuration with the SLR 8000 Base Station/Repeater.

D.5.4.1

Discriminator

The Receiver audio yields 330 mV rms into 50 kΩ with an RF input signal deviating at 60% RSD. With the trunking controllers own loading impedance, the "Discriminator" signal delivered to the trunking controller requires a boost by setting the following jumpers in the noted position:

- Marauder and Raider
  - W22: OUT position
  - W30: IN position

D.5.4.2

Tx Audio

The transmitter yields 60% RSD with 80 mV rms into the Emph Tx Audio port. No range setting is provided in the trunking controller for the Tx Audio, rather the level is solely controlled by a singular potentiometer or soft-potentiometer.

D.5.4.3

Tx Data

transmitter yields 60% RSD with 80 mV rms into the Tx Data port. No range setting is provided in the trunking controller for the Tx Data, rather the level is solely controlled by a singular potentiometer or soft-potentiometer.

- Marauder, Raider and NTS
  - Data needs to be inverted
  - NTS needs to be set for DSP operation (Channel card setting)

Appendix E

Audio Enhancement

E.1
Overview

The Hear Clear, Flutter Fighter, and Companding features improve analog audio quality in a multi-path fading environment.

The Hear Clear (Companding and Flutter Fighter activated together) and Flutter Fighter features are only available in the 800 and 900 MHz bands, while the Companding feature is available for all bands.

E.1.1
Hear Clear Feature with Third-Party Controllers

The Hear Clear feature is only available to third-party controllers without the data such as phone patch and tone remote adaptor.

Third-party Controller	Hear Clear Configuration for Third-party Box	Flutter Fighter
Community Repeater Panel	Not selectable	Selectable
Trident's Marauder controller	Not selectable	Selectable
Trident's Raider controller	Not selectable	Selectable
Phone Patch	Selectable	Selectable
Tone Remote Adaptor	Selectable	Selectable

E.1.2
Third-Party Controller and the Subscriber Configuration for Hear Clear Feature

The Hear Clear feature requires matching configuration between the SLR 8000 Base Station/Repeater that supports third-party controllers and the subscribers.

SLR 8000 with Phone Patch/Tone Remote Adapter	Subscriber
Hear Clear	Hear Clear
Flutter Fighter	Flutter Fighter
None	None

E.1.3
Hear Clear Feature Configuration in Repeater Mode

The Hear Clear feature requires matching configurations between the subscribers.

Repeater mode		
Subscriber 1	**Repeater**	**Subscriber 2**
Hear Clear	Hear Clear	Hear Clear
Flutter Fighter	Hear Clear	Flutter Fighter
None	Hear Clear	None

E.1.4
Companding Feature Configuration Between Third-Party Controllers and Subscriber

The companding feature requires matching configuration between the third-party controllers and the subscriber.

SLR 8000 with Phone Patch/Tone Remote Adapter	Subscriber
Companding	Companding
None	None

E.1.5
Companding Feature Configuration Between the Repeater and Subscribers

The companding feature requires matching configurations between the subscribers.

Repeater Mode		
Subscriber 1	**Repeater**	**Subscriber 2**
Companding	Hear Clear	Companding
None	Hear Clear	None

Appendix F

MOTOTRBO Repeater – EME ASSESSMENT

NOTICE: The example given in this Appendix applies for a UHF band typical system configuration as defined in EN 50385:2017. For different frequency bands, applicable band-specific parameters featuring a combination of the base station and a representative antenna system should be employed to carry out the computations yielding band-specific compliance boundaries.

F.1

Executive Summary

The Electromagnetic Energy (EME) compliance boundaries in a typical system configuration of the MOTOTRBO SLR 8000 Base Station/Repeater described in the following are derived.

Compliance is established with respect to the applicable limits defined in the ICNIRP guidelines [1], the United States regulations [2]-[3], and in the CENELEC Standard EN50385:2017 [4]. These standards and regulations apply to occupational and general public EME exposure.

The assessment was carried out using a computational method described in the CENELEC Standard EN62232:2017 [5], which is referenced by the EN50385:2017, and this report has been drafted in accordance with its requirements. Thus the assessment and report address the European Radio Equipment Directive essential requirements in Clause 3.1(a) concerning EME exposure.

The following table provides the compliance distances for *general public* and *occupational-type* exposure, for the UHF frequency band, antenna, and parameters considered in this analysis, based on a typical system configuration:

Table 72: EME Compliance Distances Based on Example UHF Evaluation

Compliance distances	Antenna front (Andrew mod. DB408)	Ground level (20 m below antenna)
General public exposure	6.9 m	Always compliant
Occupational-type exposure	2.15 m	Always compliant

F.2

Outdoor Exposure Prediction Model

The following sections describe how to determine the outdoor exposure model prediction of an antenna or at ground level.

F.2.1

Exposure in Front of the Antenna

The spatial-peak cylindrical formulas defined in Clause B.4.3.3.2 of the EN62232:2017 standard are applied to determine the compliance boundaries for workers and general public for a typical system configuration of the SLR 8000 Base Station/Repeater.

Figure 158: Reference Frame for the Point of Interest (POI) Cylindrical Coordinates

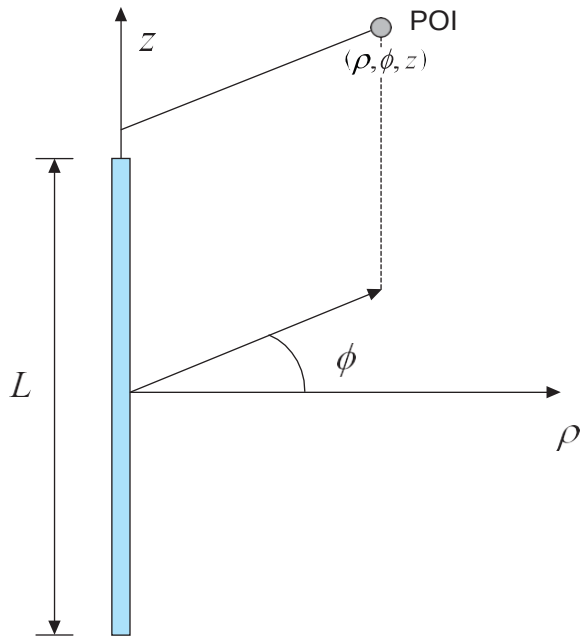

Per the reference frame in Figure 158: Reference Frame for the Point of Interest (POI) Cylindrical Coordinates on page 216, the cylindrical-wave model is applicable in the volume described in cylindrical coordinates (ρ, ϕ, z) for omni-directional array antennas as follows:

$$S(r_\gamma) = \frac{\overline{P}_{\text{avg}}}{\pi \cdot r_\gamma \cdot L \cdot \cos^2(\gamma) \cdot \sqrt{1 + (2\, r_\gamma / r_0)^2}}, \quad r_0 = \frac{1}{2} D \cdot L \cdot \cos^2 \gamma \qquad (1)$$

where

$\overline{P}_{\text{avg}}$ is the available power at the antenna port (W);

L is the physical antenna length (metres);

D is the peak antenna directivity (unit-less), assumed equal to the peak gain G_A;

γ is the electrical down-tilt angle of the antenna main beam (radians), and

$r_\gamma = \frac{\rho}{\cos\gamma}$ is the distance from the antenna center (metres). Spatial power density averaging may be required by some regulations. As the formula (1) predicts the peak power density, it represents a conservative estimate of the average power density. Thus there is no need to compute the latter.

F.2.2

Exposure at Ground Level

Several methods can be employed to determine the EME exposure at ground level.

Such an assessment is not necessary if the mounting height of the antenna is larger than the compliance distance in front of the antenna, computed using the EN62232:2017 methodology outlined in Exposure in Front of the Antenna on page 216. If this is not feasible, then the following approach can be employed.

At ground level exposure occurs in the antenna far-field. The antenna phase center is assumed to be the mounting height. The resulting predictive equation for the power density is:

$$S(d) = (2.56) \frac{P \cdot G(\theta)}{4\pi (H^2 + d^2)}$$

where $G(\theta)$ is the elevation gain pattern, which is approximated by the following expression:

$$G(\theta) = G_A \left| \frac{\sin\left(\frac{k_0 L}{2} \sin\theta\right)}{\frac{k_0 L}{2} \sin\theta} \right|^2$$

where $k_0 = 2\pi / \lambda$ is the free-space wavenumber and L is the effective antenna length yielding the appropriate vertical beamwidth, while H is the antenna height above ground and d is the point of interest (POI) distance from the vertical antenna projection to ground (see the following figure). The multiplicative factor 2.56 is introduced to enforce near-perfect, in-phase ground reflection as recommended in [2]. In this case, spatial averaging is not carried out to make the EME exposure assessment more conservative.

Figure 159: Schematic of the Ground-Level Exposure Model Adopted for the Assessment

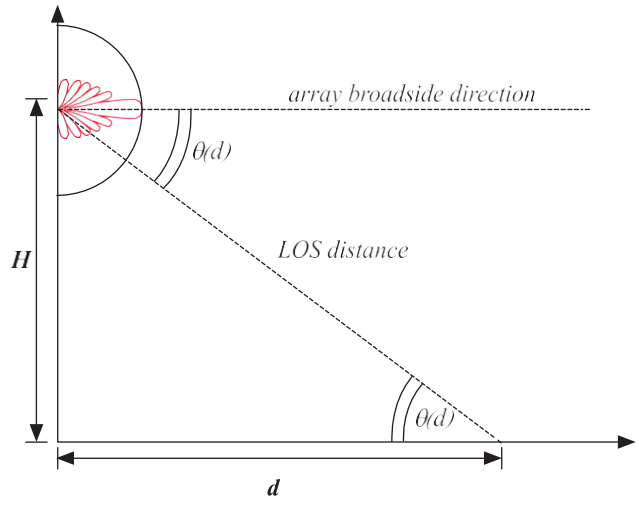

F.3
Typical System Configuration

The SLR 8000 Base Station/Repeater operates in different frequency ranges with different channels transmitting 100 W radio frequency (RF) power.

The typical system configuration comprises an omnidirectional array antenna featuring 6–10 dBd gain, installed at or above 20 m from ground level, and fed by the base station/repeater through a combiner characterized by a typical 3 dB transmission loss, and a 30 m 7/8" coaxial cable characterized by a typical 2.7 dB/100m loss, resulting in a total 3.9 dB transmission loss. Based on these characteristics, the RF power at the antenna input is about 200 W.

Since shorter antennas provide a conservative EME exposure assessment from equation (1), when $r < r_0$, the parameters of a typical 6.6 dBd antennas are employed (it has to be verified that the resulting compliance distances are indeed smaller than r_0). Such an antenna (such as, Andrew DB408) would exhibit a typical elevation beamwidth of about 14 degrees.

F.4
Exposure Limits

Guidelines are used for the EME exposure assessment.

Based on the operating frequency range, the most conservative power density limits are those defined in the EN50385:2017. The reference levels, expressed in terms of incident power density, are 10.1 W/m^2 for occupational exposure, and 2.02 W/m^2 for general public exposure.

F.5

EME Exposure Evaluation

The following sections describe how to evaluate the EME exposure in front of an antenna or at ground level.

F.5.1

Exposure in Front of the Antenna

The assessment is based on the following characteristics of the Andrew DB408 antenna:

$$G_A = 10^{\frac{6.6+2.15}{10}} = 7.5 \qquad P = 200\,W \qquad \gamma = 0 \qquad L = 2.7\,m$$

The parameter r_0 is thus $r_0 = 10.1m$. Upon inserting the power density limits established in Exposure Limits on page 218 into formula (1), the following distances for occupational and general public exposure compliance are respectively determined:

$$r_{occupational} = 2.15m$$

and

$$r_{general\ public} = 6.9m$$

As both these distances are less than r_0, the aforementioned choice (Typical System Configuration on page 218) of considering the shorter, lower gain antenna to perform the assessment is deemed valid. Longer, higher gain antennas would yield shorter compliance distances, for the same input antenna power and operating frequency range.

F.5.2

Exposure at Ground Level

Since the antenna installation height above ground level in the typical system configuration (20 m) is larger than either of the compliance distances determined in Exposure in Front of the Antenna on page 219, the EME exposure at ground level is always compliant with the exposure limits defined in the ICNIRP guidelines.

F.6

Compliance Boundary Description

Based on the analysis in EME Exposure Evaluation on page 219, the compliance boundaries for occupational and general public exposure are defined as cylinders enclosing the antenna (see Figure 160: Compliance Boundary for General Public (GP) and Ocupational (OCC) Exposure on page 220), extending 75 cm (one wavelength) above and below the physical antenna, with radii:

Occupational exposure:

$$\rho_{OCC} = 2.15\,m$$

General Public exposure:

$$\rho_{GP} = 6.9\ m$$

Figure 160: Compliance Boundary for General Public (GP) and Ocupational (OCC) Exposure

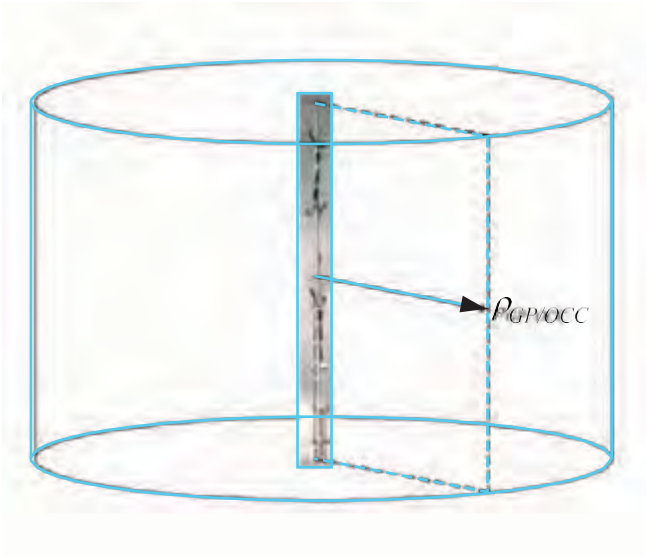

F.7

Product Put In Service

Some regulations require that additional exposure assessments be performed when putting the product in service, to account for antenna site-specific circumstances such as the environment (for example, electromagnetic scatterers) and other antennas. In such cases, certain standards [6] may need to be considered to determine the most suitable compliance assessment methodology.

F.8

References

1 International Commission on Non-Ionizing Radiation Protection (ICNIRP), "Guideline for Limiting Exposure to Time-Varying Electric, Magnetic, and Electromagnetic Fields", Health Physics, vol. 74, no. 4, pp. 494-522, April 1998.

2 United States Federal Communication Commission, "Evaluating compliance with FCC guidelines for human exposure to radio frequency electromagnetic fields", OET Bulletin 65, Ed. 97-01, Section 2 (Prediction Methods), August 1997.

3 US Code of Federal Regulations, Title 47, Volume 1, Sec. 1.1310 Radio frequency radiation exposure limits (Revised as of October 1, 2003). https://www.gpo.gov/fdsys/pkg/CFR-2003-title47-vol1/xml/CFR-2003-title47-vol1-sec1-1310.xml (valid as of May 2018).

4 EN 50385:2017. Product standard to demonstrate the compliance of base station equipment with radiofrequency electromagnetic field exposure limits (110 MHz–100 GHz), when placed on the market. CENELEC (European Committee for Electrotechnical Standardization).

5 EN 62232:2017. Determination of RF field strength, power density and SAR in the vicinity of radiocommunication base stations for the purpose of evaluating human exposure. CENELEC (European Committee for Electrotechnical Standardization).

6 EN 50401:2017. Product standard to demonstrate the compliance of base station equipment with radiofrequency electromagnetic field exposure limits (110 MHz–100 GHz) when put into service. CENELEC (European Committee for Electrotechnical Standardization).

Glossary of Terms and Acronyms

This glossary contains an alphabetical listing of terms and their definitions that are applicable to repeater products. All terms do not necessarily apply to all radios, and some terms are merely generic in nature.

Alert tone
Audio signal produced by the station, providing feedback to the user.

Analog
Refers to a continuously variable signal or a circuit or device designed to handle such signals.

ASIC
Application Specific Integrated Circuit.

AUX
Auxiliary.

Band
Frequencies allowed for a specific purpose.

CTCSS
Continuous Tone-Controlled Squelch Systems (PL).

Clear
Channel modulation type in which voice information is transmitted over the channel using analog modulation.

Conventional
Term used for standard non-trunked radio system (usually using TRC/DC console).

CPS
Customer Programming Software: Software with a graphical user interface containing the feature set of a radio.

Default
A pre-defined set of parameters.

Digital
Refers to data that is stored or transmitted as a sequence of discrete symbols from a finite set; most commonly this means binary data represented using electronic or electromagnetic signals.

DPL
Digital Private-Line: A type of digital communications that utilizes privacy call, as well as memory channel and busy channel lock out to enhance communication efficiency.

DSP
Digital Signal Processor, microprocessor specifically designed to perform digital signal processing algorithms.

EIA
Electronic Industries Association.

ESD
Electro Static Discharge.

EU
European Union.

FCC
Federal Communications Commission.

FM
Frequency Modulation.

Frequency
Number of times a complete electromagnetic-wave cycle occurs in a fixed unit of time (usually one second).

FRU
Field Replaceable Unit.

FSK
Frequency Shift Keying.

GNSS
Global Navigation Satellite System.

GPIO
General Purpose Input/Output.

IC
Integrated Circuit: An assembly of interconnected components on a small semiconductor chip, usually made of silicon. One chip can contain millions of microscopic components and perform many functions.

IF
intermediate frequency.

I/O
Input or Output.

kHz
kilohertz: One thousand cycles per second. Used especially as a radio-frequency unit.

LCD
Liquid-Crystal Display: An LCD uses two sheets of polarizing material with a liquid-crystal solution between them. An electric current passed through the liquid causes the crystals to align so that light cannot pass through them.

LED
Light Emitting Diode: An electronic device that lights up when electricity is passed through it.

MDC
Motorola Data Communications. 1200 or 4800 baud data signalling scheme.

MHz
Megahertz: One million cycles per second. Used especially as a radio-frequency unit.

MISO
Master In, Slave Out.

MOSI
Master Out, Slave In.

PA
Power Amplifier that transmits final RF signal to transmit antenna.

PC Board
Printed Circuit Board. Also referred to as a PCB.

PFC
Power Factor Correction.

PL
Private-Line Tone Squelch: A continuous sub-audible tone that is transmitted along with the carrier.

Programming Cable
A cable that allows the CPS to communicate directly with the radio using RS232.

PTT
Push-to-talk; the switch located on the left side of the radio which, when pressed causes the radio to transmit.

Receiver
Electronic device that amplifies RF signals. A Receiver separates the audio signal from the RF carrier, amplifies it, and converts it back to the original sound waves.

Repeater
Remote transmit/receive facility that retransmits received signals in order to improve communications range and coverage.

RF
Radio Frequency: The portion of the electromagnetic spectrum between audio sound and infrared light (approximately 10 kHz to 10 GHz).

RSSI
Received Signal Strength Indicator; a dc voltage proportional to the received RF signal strength.

Rx
Receive.

SCM
Station Control Module; station controller.

SELV
Separated Extra Low Voltage.

Signal
An electrically transmitted electromagnetic wave.

SINAD
Acronym for the ratio of signal plus noise plus distortion and noise plus distortion.

SLR
Refers to Digital Professional Repeater model names in the MOTOTRBO Professional Digital Two-Way Radio System.

Spectrum
Frequency range within which radiation has specific characteristics.

SPI
Serial Peripheral Interface (clock and data lines); simple synchronous serial interface for data transfer between processors and peripheral ICs.

Squelch
Muting of audio circuits when received signal levels fall below a pre-determined value. With carrier squelch, all channel activity that exceeds the radio’s preset squelch level can be heard.

TOT
Time-out Timer: A timer that limits the length of a transmission.

TPL
Tone Private Line.

Transceiver
Transmitter-Receiver. A device that both transmits and receives analog or digital signals. Also abbreviated as XCVR.

Transmitter
Electronic equipment that generates and amplifies an RF carrier signal, modulates the signal, and then radiates it into space.

Trunking
Radio control system which permits efficient frequency utilization and enhanced control features.

Tx
Transmit.

UHF
Ultra High Frequency.

USB
Universal Serial Bus: An external bus standard that supports data transfer rates of 12 Mbps.

VCO
Voltage-Controlled Oscillator; an oscillator whereby the frequency of oscillation can be varied by changing a control voltage.

VCTCXO
Voltage Controlled Temperature Compensated Crystal Oscillator.

VHF
Very High Frequency.

VIP
Vehicle Interface Port.

VSWR
Voltage Standing Wave Ratio.

WLAN
Wireless Local Area Network.