Memory Viewer function

The Memory Viewer function makes it is possible to project the video or still image stored in the USB memory.

What you can project with the Memory Viewer function

Memory Viewer function supports the following files.

	Extension	Format	Restriction
Still image	jpg/jpeg	JPEG	Number of pixels: Maximum 8 000 x 8 000 (For progressive JPEG, maximum 4 096 x 4 096) YUV format: Only YUV444, YUV422, and YUV411 supported Color mode: Only RGB supported
	bmp	Windows Bitmap	Number of pixels: Maximum 2 000 x 2 000 (1-bit, 4-bit, 8-bit, 16-bit, 24-bit, and 32-bit supported) Following formats are not supported. Run-length encoding, Bit fields, Top to bottom, Transparent data

	Extension	Codec		Restriction*1	
		Video	Audio	Video	Audio
Movie	mov	H.264/MPEG-4 AVC Motion JPEG	AAC Linear PCM	Resolution: Maximum 1 920 x 1 080 Minimum 240 x 180 Frame rate: Maximum 30 fps Bit rate: Maximum 40 Mbps	Sample rate: Maximum 48 kHz (For Linear PCM, maximum 16 kHz) Channel: Maximum 2 ch Bit rate: Maximum 384 kbps
	avi	H.264/MPEG-4 AVC Motion JPEG MPEG-4	MPEG-1/2 Audio Layer-3 (MP3) AAC Linear PCM		
	mp4	H.264/MPEG-4 AVC MPEG-4	AAC MPEG-4 AAC-LC		
	mpg/mpeg	MPEG-2	MPEG-1/2 Audio Layer-2		
	wmv	WMV9	WMA		

*1 Following movie files are not supported.
- Files with the video codec of WMV7, WMV8, DivX, or Xvid
- Uncompressed video
- Multi-angle video
- Files with the profile of Advanced Simple Profile @ Level 0 or Advanced Simple Profile @ Level 1

Note

- Some information for still image / movie files can be viewed with a computer where relevant files are accessible.
  Operation example
  - For Windows computer
    1. Right-click a file, and click [Properties].
    2. Click the [Details] tab.
  - For Mac
    1. Click a file while holding down the “Control” key, and click [Get Info].
    2. Click the [More Info] tab.
- The maximum size of file is 2 GB.
- Files protected by Digital Rights Management (DRM) cannot be used.
- The maximum number of folder/file is up to 1 000. If it exceeds the folder/file cannot display and an error message appears.
- It maybe impossible to play even if the file is recorded in the supported format.

Cautions on using USB Memory

Please observe the following.
- Do not put USB memory or its cap within close reach of children. Swallowing them may cause suffocation.
- If the smoke or questionable odor rise, remove the USB memory from the projector, and then contact your dealer.
- Do not put water, chemical or oil to the USB memory. It may cause short out or fire.
- Do not put foreign objects or put metal objects to the USB terminal. Static electricity may cause data loss or data corruption.
- Do not remove the USB memory from the computer or the projector while the USB memory is reading out or writing the data. It may cause data loss or data corruption.
- Do not store the USB memory where high temperature, humid or dusty place or magnetized items are around.

Note

- It is compatible with the USB memory sold in the market.
- It cannot be used the other format other than the formatted with FAT16 and FAT32.

Inserting the USB memory

1) Insert the USB memory directly into the <USB A (VIEWER)> terminal.

Attention

- When inserting the USB memory, confirm the direction of the plug and do not damage the terminal.

Removing the USB memory

1) Make sure that the USB memory is not flashing, and then unplug it.

Attention

- Please note following points when removing the USB memory.
  - The indicator of the USB memory is blinking means that the projector is reading out the data. Do not remove the USB memory while it is blinking.
  - When using a USB memory without an indicator, you cannot recognize when the projector reading out the data. Please remove it from the projector after closing the memory viewer function or turning off the projector.
  - Do not insert and remove the USB memory in a short time. Remove the USB memory at least five seconds after inserting. And insert it at least five seconds after removing. When inserting or removing the USB memory, the projector takes about 5 seconds to identify the operation.

Note

- The USB memory can be inserted or removed regardless of the power status of the projector.

Displaying the memory viewer screen

1) Insert the USB memory in which the video or still image file is stored into the <USB A (VIEWIER)> terminal.

- For more information about using USB memory, refer to “Cautions on using USB Memory”. (➡ page 116)

2) Press the <MEMORY VIEWER> button.

- The memory viewer screen (in thumbnail or list display) will be projected.
- A cursor will be displayed in the thumbnail display area or the list display area on the right of the screen. (The background is yellow.)

Thumbnail display

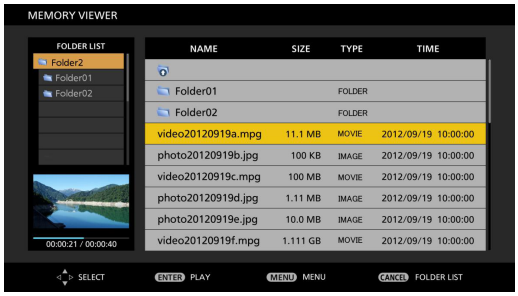

Folder list display

Note

- The display method of the Memory Viewer screen (in thumbnail or list display) can be set in [NETWORK/USB] menu → [MEMORY VIEWER] → [VIEW]. (➡ page 94)

Operations of the Memory Viewer screen

The following describes the operations after the Memory Viewer screen displays.

When displaying in thumbnail

1) Press the <AUTO SETUP/CANCEL> button on the remote control or the <EASY SETTING/CANCEL> button on the control panel.

- The cursor moves from the thumbnail display area on the right of the screen to the folder list on the upper left of the screen. (The background is orange.)

2) Press ▲▼ to select a folder, then press the <ENTER> button.

- If there is a folder in the lower level, it will be expanded and displayed in the folder list on the upper left of the screen.
- The selected folder (cursor position) is displayed on an orange background.

3) Press ▲▼◀▶ to select the desired file.

- The detailed information of the selected file will be displayed in the information area on the lower left of the screen.

4) Press the <ENTER> button.

- The file starts playing on the full screen.
- For the detailed information on the playing order, refer to the “Playing the still image” (➡ page 119) or “Playing the video” (➡ page 120).

5) Press the <AUTO SETUP/CANCEL> button on the remote control or the <EASY SETTING/CANCEL> button on the control panel to exit playing.

- Exit the full screen display, and the Memory Viewer screen (in thumbnail display) is displayed.
- If you want to continue to play another file, please perform the step 1) to 4) again.

Note

- When Memory Viewer screen is displayed, each time you press the <AUTO SETUP/CANCEL> button on the remote control or the <EASY SETTING/CANCEL> button on the control panel, the cursor will move between the folder list area and the thumbnail (or list) display area.
- The display order of the thumbnail is in accordance with the setting of [NETWORK/USB] menu → [MEMORY VIEWER] → [SORT]. (➡ page 94)

When displaying in list

1) Press the <AUTO SETUP/CANCEL> button on the remote control or the <EASY SETTING/CANCEL> button on the control panel.

- The cursor moves from the list display area on the right of the screen to the folder list on the upper left of the screen. (The background is orange.)

2) Press ▲▼ to select a folder, then press the <ENTER> button.

- If there is a folder in the lower level, it will be expanded and displayed in the folder list on the upper left of the screen.
- The selected folder (cursor position) is displayed on an orange background.

3) Press ▲▼ to select the desired file.

- The detailed information of the selected file will be displayed in the information area on the lower left of the screen.

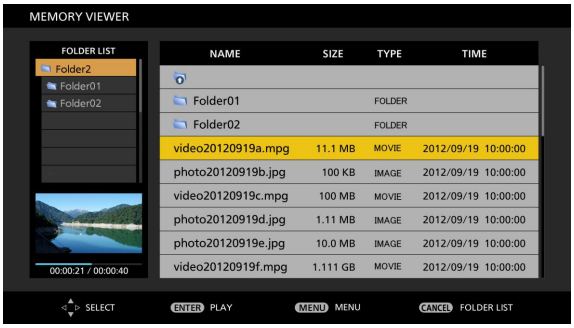

4) Press the <ENTER> button.

- The file starts playing on the full screen.
- For the detailed information on the playing order, refer to the “Playing the still image” (➡ page 119) or “Playing the video” (➡ page 120).

5) Press the <AUTO SETUP/CANCEL> button on the remote control or the <EASY SETTING/CANCEL> button on the control panel to exit playing.

- Exit the full screen display, and the Memory Viewer screen (in list display) is displayed.
- If you want to continue to play another file, please perform the step 1) to 4) again.

Note

- When Memory Viewer screen is displayed, each time you press the <AUTO SETUP/CANCEL> button on the remote control or the <EASY SETTING/CANCEL> button on the control panel, the cursor will move between the folder list area and the thumbnail (or list) display area.
- The display order of the list is in accordance with the setting of [NETWORK/USB] menu → [MEMORY VIEWER] → [SORT]. (➡ page 94)

Playing the still image

Introduce the procedure to the example of the operation in the MEMORY VIEWER screen of [THUMBNAIL] display method. In the case of the MEMORY VIEWER screen of [LIST] display method, you can play with the same procedure other than the selection operation of file.

Operation Guide

Display example of auto playing (still image)

When the automatic playback function is enable

Introduce the procedure of the operation under the [MEMORY VIEWER] menu → [AUTOPLAY] is set to [ON] (➡ page 94). All images in the same folder will play automatically when [MEMORY VIEWER] menu → [INTERVAL] or [EFFECT] is set to the special setting. (➡ page 94)

1) Press ▲▼◀▶ to select a file which you want to play first from the thumbnail, and then press the <ENTER> button.

- It will start playing in full screen.
- Press the <ENTER> button again, the play will stop temporarily. If you want to continue the play, press the button again.
- Playback is finished, you can start playing the next file.
- Press ▶ during playing, it will skip the current playing and automatic play from the next file.
- Press ◀ during playing, it will continue automatic play back to the previous file.
- Press ▲ during playing, the image will be rotated 90 ° in the clockwise direction while maintaining the aspect ratio.
- Press ▼ during playing, the image will be rotated 90 ° in the counterclockwise direction while maintaining the aspect ratio.

2) Press the <AUTO SETUP/CANCEL> button on the remote control or the <EASY SETTING/CANCEL> button on the control panel.

- Exit the automatic playback and returns to the MEMORY VIEWER screen (thumbnails).

When the automatic playback function is disable

Introduce the procedure of the operation under the [MEMORY VIEWER] menu → [AUTOPLAY] is set to [OFF] (➡ page 94). In this case, it will play a file one by one.

1) Press ▲▼◀▶ to select a file from the thumbnail, and then press the <ENTER> button.

- The selected still image will be played in full screen.
- Press ▶ to play the next file.
- Press ◀ to play back to the previous file.

2) Press the <AUTO SETUP/CANCEL> button on the remote control or the <EASY SETTING/CANCEL> button on the control panel.

- Exit the full screen and return to the MEMORY VIEWER screen of thumbnail display method.

Note

- If the number of recording pixels is less than 1 280 × 800, it will be enlarged while maintaining the aspect ratio.
- If the number of recording pixels is more than 1 280 × 800, it will be reduced display while maintaining the aspect ratio.
- The order of playback, please follow the order that you set on the [MEMORY VIEWER] menu→ [SORT] (➡ page 94). Even if the video files and still image files are mixed in the folder, it will be played according to the settings of the [SORT].
- The operation guide of the bottom of the playback screen can be turned off when [MEMORY VIEWER] → [GUIDE] is set to [OFF]. (➡ page 94)

Playing the video

Introduce the procedure to the example of the operation in the MEMORY VIEWER screen of [THUMBNAIL] display method. In the case of the MEMORY VIEWER screen of [LIST] display method, you can play with the same procedure other than the selection operation of file.

Display example (10 speed) fast-forward during playback

When the automatic playback function is enable

Introduce the procedure of the operation under the [MEMORY VIEWER] menu → [AUTOPLAY] is set to [ON] (➡ page 94). In this case, all video files in the same folder will play automatically.

1) Press ▲▼◀▶ to select a file which you want to play first from the thumbnail, and then press the <ENTER> button.

- It will start playing in full screen.
- Press the <ENTER> button to pause the playback. Press the button again to play the video at the position of pause.
- Playback is finished, you can start playing the next file.
- If you press ▶ during playing, you can fast forward playback. In addition, the speed will be faster by pressing ▶ each time. (3 stages)
- If you press ◀ during playing, you can rewind playback. In addition, the speed will be faster by pressing ◀ each time. (3 stages)
- Press ▲ during playing, it will be returned to play from the beginning. (Play from the beginning)
- Press ▶ during pausing, it will skip the current playing and automatic play from the next file.
- Press ◀ during pausing, it will automatic play from the previous file.

2) Press the <AUTO SETUP/CANCEL> button on the remote control or the <EASY SETTING/CANCEL> button on the control panel.

- Exit the automatic playback and returns to the MEMORY VIEWER screen (thumbnails).

When the automatic playback function is disable

Introduce the procedure of the operation under the [MEMORY VIEWER] menu → [AUTOPLAY] is set to [OFF] (➡ page 94).
In this case, it will play a file one by one.

1) Press ▲▼◀▶ to select a file from the thumbnail, and then press the <ENTER> button.

- It will start playing in full screen.
- Press the <ENTER> button to pause the playback. Press the button again to play the video at the position of pause.
- Playback is finished, you can start playing the next file.
- If you press ▶ during playing, you can fast forward playback. In addition, the speed will be faster by pressing ▶ each time. (3 stages)
- If you press ◀ during playing, you can rewind playback. In addition, the speed will be faster by pressing ◀ each time. (3 stages)
- Press ▲ during playing, it will be returned to play from the beginning. (Play from the beginning)
- Press ▶ during pausing, it will skip the current playing and automatic play from the next file.
- Press ◀ during pausing, it will automatic play from the previous file.

2) Press the <AUTO SETUP/CANCEL> button on the remote control or the <EASY SETTING/CANCEL> button on the control panel.

- Exit the automatic playback and returns to the MEMORY VIEWER screen (thumbnails).

Note

- If the number of recording pixels is less than 1 280 × 800, it will be enlarged while maintaining the aspect ratio.
- If the number of recording pixels is more than 1 280 × 800, it will be reduced display while maintaining the aspect ratio.
- The order of playback, please follow the order that you set on the [MEMORY VIEWER] menu→ [SORT] (➡ page 94).
  Even if the video files and still image files are mixed in the folder, it will be played according to the settings of the [SORT].
- The operation guide of the bottom of the playback screen can be turned off when [MEMORY VIEWER] → [GUIDE] is set to [OFF]. (➡ page 94)

Resume playing function

The resume playing function can be used when the auto play function is disable ([MEMORY VIEWER] → [AUTOPLAY] is set to [OFF]) (➡ page 94).
If you stop a video during playing, and then want to resume playing the same video, this function allow you to replay from the position where you stop last time.
The video starts to play from the position where you stop last time in one of the following situation:

- When you stop the video during playing and return to the Memory Viewer screen, then select the same video.
- When you want to play the original video after playing another video file or image file.

Note

- During playing, you can press the <ENTER> button to pause the video, and press the <AUTO SETUP/CANCEL> button on the remote control or the <EASY SETTING/CANCEL> button on the control panel to exit the full screen display. The resume information (the position where you stop the video during playing) will be kept automatically.
- The maximum number of the file whose resume information (the position where you stop the video during playing) being kept is up to 50. If it exceeds, the resume information of the oldest file cannot be kept.
- It maybe impossible to resume playing exactly from where you stop last time.
- When switching the input to the [MIRRORING] or [Panasonic APPLICATION], unplugging the power cord, removing the USB memory, the resume information will be discarded.

Description of the memory viewer screen

The indication of icons on the memory viewer screen are as following:

	Icon indicates that can move to the upper layer. Move to the upper layer when selected.
	Icon indicates the lower layer of the folder. Move to the lower layer when selected.
	Icon indicates that the file is a still image.
	Icon indicates that the file is a video.

	Icon indicates that the file cannot be expanded even if the extension of the file name is supported.
	Rotates the picture 90° to the left.
	Rotates the picture 90° to the right.
	Plays at the speed of about 2 times. (With audio)
	Plays at the speed of about 5 times.
	Plays at the speed of about 10 times.
	Plays pause temporarily.
	Backwards at the speed of about 2 times.
	Backwards at the speed of about 5 times.
	Backwards at the speed of about 10 times.

About MIRRORING

The MIRRORING is a function to project the same images as the displayed images on the device with the projector. The MIRRORING function connects the Intel® WiDi / Intel® Pro WiDi / Miracast compatible device to the projector via wireless LAN.

Connecting with the Intel® WiDi / Intel® Pro WiDi / Miracast compatible device

1) Press the <MIRRORING> button on the remote control.

- Switch the MIRRORING input, and the MIRRORING idle screen will display.
- You can also select the MIRRORING input by pressing the <INPUT SELECT> button on the control panel.

The MIRRORING idle screen

2) Start the Intel® WiDi / Intel® Pro WiDi / Miracast application of the correspondent Intel® WiDi / Intel® Pro WiDi / Miracast devices.

- Check the device name / device ID which is displayed on the MIRRORING idle screen, and then select the device name on the Intel® WiDi / Intel® Pro WiDi / Miracast application.

3) If the device is required to input the PIN (8-digit number), enter the PIN displayed on the MIRRORING idle screen.

The PIN displayed on the MIRRORING idle screen

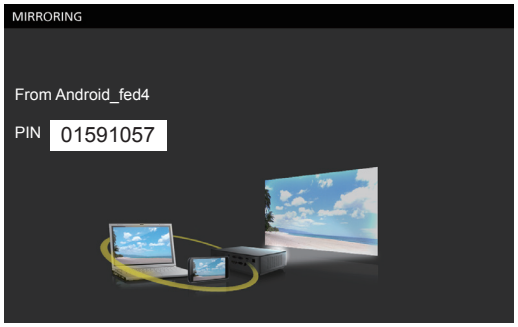

Note

- The Intel® WiDi / Intel® Pro WiDi / Miracast application name and starting method may differ from devices.
- For the operation of the Intel® WiDi / Intel® Pro WiDi / Miracast application, refer to the operation instructions of the device.

Disconnecting with the Intel® WiDi / Intel® Pro WiDi / Miracast compatible device

Close the Intel® WiDi / Intel® Pro WiDi / Miracast application of the device. And then the MIRRORING idle screen will be projected.

If you disconnect the device forcibly without closing the application, such as turning off the power of the device, it may take a longer time to display the MIRRORING idle screen.

Note

- Miracast is a standard that developed by Wi-Fi Alliance, it is possible to transmit the image displayed on the device wirelessly.
- Intel® WiDi or Intel® Pro WiDi is a standard that developed by Intel, it is based on the Miracast and added with new technologies and functions, it is also possible to transmit the image displayed on the device wirelessly.
- When connected with MIRRORING, the volume cannot be adjusted by pressing the <VOL-/VOL+> buttons on the remote control.
- The MIRRORING function is disabled when the [WIRELESS LAN] menu is set to [DISABLE] (➡ page 89).
- If a space is inserted in the projector name of [NAME CHANGE], the space in the projector name will be displayed to "_" on the MIRRORING idle screen for the projector or on the Intel® WiDi / Intel® Pro WiDi / Miracast compatible device.

Chapter 6 Maintenance

This chapter describes methods of inspection when there are problems, maintenance, and replacement of the units.

Lamp and Warning Indicators

When an indicator lights up

If a problem should occur inside the projector, the lamp indicator <LAMP> and the warning indicator <WARNING> will inform you by lighting or blinking. Check the status of the indicators and remedy the indicated problems as follows.

Attention

- Before you take a remedial measure, follow the procedure of switching the power off indicated in “Powering Off the projector”. (➡ page 45)

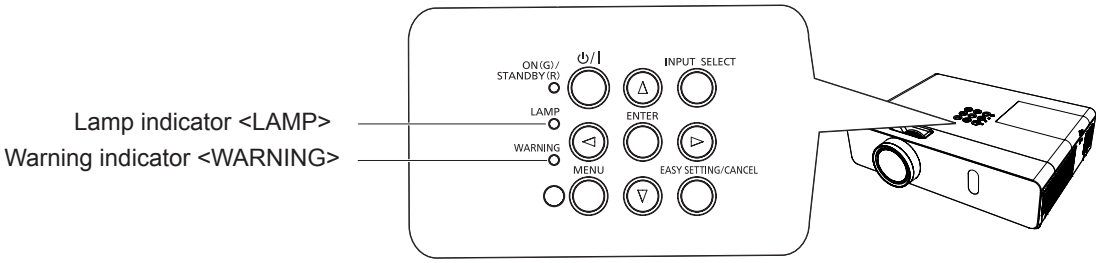

Lamp indicator

Indicator status	Lighting in red	Blinking in red	
Status	Time to replace the lamp unit. (➡ page 128)	A problem is detected in the lamp or the power supply for the lamp.	
Check	• Was [REPLACE LAMP] displayed when you turned on the power? • The indicator lights up when the runtime of the lamp unit has reached 5 000 hours (when [LAMP POWER] is set to [NORMAL]).	• Have you turned on the power again immediately after turning it off?	• Some error has occurred in the lamp circuit. Check for fluctuation (or drop) in the source voltage.
Remedy	• Replace the lamp unit.	• Wait a while until the luminous lamp cools off, and then turn on the power.	• Turn off the projector, and unplug the AC power cord, and consult your dealer.

Note

- If the lamp indicator <LAMP> is still lighting or blinking after taking the preceding measures, ask your dealer for repair.

Warning indicator

Indicator status	Lighting in red	Blinking in red	Blinking in red (Slow)
Status	Internal temperature is high (warning).	Internal temperature is high (standby status).	The projector detects an abnormal condition and cannot be turned on.
Check	• Is the air intake/exhaust port blocked? • Is the room temperature high? • Is the air filter unit dirty?		–
Remedy	• Remove any objects that are blocking the air intake / exhaust port. • Install the projector in a location with an ambient temperature of 0 °C (32 °F) to 40 °C (104 °F). • Do not use the projector at high altitudes of 2 700 m (8 858') or higher above sea level. • Replace the air filter unit. (➡ page 126)		• If the projector is turned off again, unplug the AC power cord and contact the dealer or the service center for service and checkup.

Note

- If the warning indicator <WARNING> is still lighting or blinking after taking the preceding measures, ask your dealer for repair.

Maintenance/replacement

Before performing maintenance/replacement

- When you perform maintenance or replacement of the parts, make sure to turn off the power and disconnect the power plug from the wall outlet. (➡ pages 45, 41)
- Be sure to observe the procedure “Powering Off the projector” (➡ page 45) when performing power supply operation.

Maintenance

Outer Case

Wipe off dirt and dust using a soft dry cloth.

- If the dirt is persistent, soak the cloth with water and wring it thoroughly before wiping. Dry off the projector with a dry cloth.
- Do not use benzene, thinner or rubbing alcohol, other solvents or household cleaners. Using them may cause deterioration of the outer case.
- When using chemical treated dusters, follow its instruction.

Front glass surface of the lens

Wipe off the dirt and dust off the front surface of the lens with soft clean cloth.

- Do not use a cloth that has an abrasive surface or a cloth that is moist, oily or covered with dust.
- Do not use excessive force when wiping the lens as it is fragile.
- Do not use benzene, thinner or rubbing alcohol, other solvents or household cleaners. Using them may cause deterioration of the lens.

Attention

- The lens is made of glass. Impacts or excessive force when wiping may scratch its surface.
  Please handle with care.

Replacing the unit

Air filter unit

The air filter prevents dust from accumulating on the optical elements inside the projector. Should the air filter become clogged with dust particles, it will reduce cooling fans’ effectiveness and may result in internal heat buildup and adversely affect the life of the projector.

If the air filter unit become clogged, it will result in internal heat buildup, the power of the projector may be turned off for safety.

If a warning message appears on the screen, replace the air filter immediately.

Consult your dealer to purchase a replacement air filter unit (ET-RFV300).

Removing the air filter unit

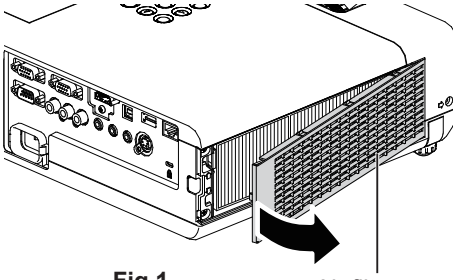

Fig.1

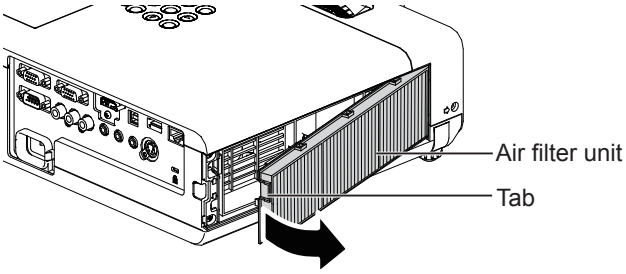

Fig.2

1) Remove the air filter cover. (Fig.1)

- Open the air filter cover in the direction of the arrow and remove it.

2) Remove the air filter unit.

- Hold the tab of the air filter unit and pull out in the direction of the arrow. (Fig.2)
- After removing the air filter unit, remove foreign objects and dust from the air filter compartment and the projector’s air intake port if there are any.

Attaching the air filter unit

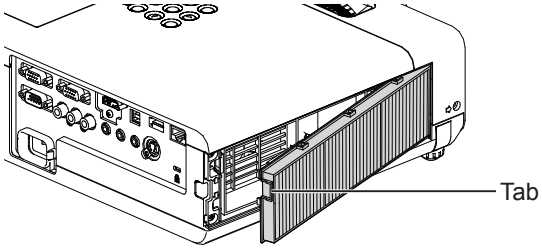

1) **Attach the unused air filter unit to the projector.**
   - Hold the air filter unit that the tab is in up-left side in the figure, put the right side in the figure first, and press the tab side until make a click sound.
   - Please press the tab of the air filter unit other than the pleated filter during installation.

2) **Install the air filter cover.**
   - Perform Step 1) in “Removing the air filter unit” (➡ page 126) in the reverse order to close the air filter cover and press it firmly until make a click sound.
   - Make sure that the air filter cover is closed tightly.

Resetting the filter counter

Be sure to reset the filter counter after replacing the air filter unit.

1) **Connect the power plug, press the power <⏻/|> button on the control panel or the power on <|> button on the remote control.**
2) **Press the <MENU> button to display the main menu, then press ▲▼ to select [PROJECTOR SETUP].**
3) **Press the <ENTER> button, press ▲▼ to select [FILTER COUNTER].**
4) **Press the <ENTER> button, press ▲▼ to select [FILTER COUNTER RESET].**
5) **Press the <ENTER> button.**
   - [FILTER COUNTER RESET] confirmation is displayed.
6) **Press ◀▶ to select [OK], then press the <ENTER> button.**
   - The filter usage time is 0 after reset.

Attention

- Turn off the power before you replace the air filter unit.
- When attaching the air filter unit, make sure that the projector is stable, and work in an environment that is safe, even in the event of the air filter unit dropping.
- Make sure that the air filter unit is properly attached before using the projector. If it is not attached, the projector will suck in dirt and dust causing a malfunction.
- Do not put anything into the air vents. Doing so may result in malfunction of the projector.
- The air filter unit to be replaced should be an unused product.
- After replacing the air filter, reset the filter counter. Otherwise, “FILTER COUNTER has reached the set time.” will appear on screen.

Note

- The replacement cycle of the air filter unit varies greatly depending on the usage environment.

Lamp unit

The lamp unit is a consumable component. Refer to “When to replace the lamp unit” (➡ page 128) for details about the replacement cycle.
It is recommended to ask an authorized engineer to replace the lamp unit. Contact your dealer.
Consult your dealer to purchase a replacement lamp unit (ET-LAV300).

Warning

Do not replace the lamp unit when it is hot. (Wait at least 1 hour after use.)
The inside of the cover can become very hot, take care to avoid burn injuries.

Notes on the replacement of the lamp unit

- The luminous source of the lamp is made of glass and may burst if you hit it against a hard surface or drop it. Please handle with care.
- A Phillips screwdriver is required for replacement of the lamp unit.
- When replacing the lamp unit, be sure to hold it by the handle.
- When replacing the lamp because it has stopped illuminating, there is a possibility that the lamp may be broken. If replacing the lamp of a projector which has been installed on the ceiling, you should always assume that the lamp is broken, and you should stand to the side of the lamp cover, not underneath it. Remove the lamp cover gently. Small pieces of glass may fall out when the lamp cover is opened. If pieces of glass get into your eyes or mouth, seek medical advice immediately.
- The lamp may be ruptured. Care should be taken not to scatter pieces of the broken lamp glass when replacing the lamp unit. Pieces of the broken lamp may fall from the lamp unit especially when the projector is mounted on the ceiling, so when replacing the lamp unit do not stand directly underneath it or position your face close to it.
- The lamp contains mercury. Consult your local municipality or your dealer about correct disposal of used lamp units.

Attention

- Panasonic takes no responsibility for any damage or malfunction of the product resulting from use of lamp units which are not manufactured by Panasonic. Use only specified lamp units.

Note

- The model numbers of accessories and optional accessories are subject to change without prior notice.

When to replace the lamp unit

The lamp unit is a consumable component. Since its brightness gradually decreases over time, it is necessary to replace the lamp unit regularly. The estimated duration before replacement is 5 000 hours, but the lamp may go off before 5 000 hours has elapsed depending on individual lamp characteristics, usage conditions, and the installation environment. It is recommended that the Replacement lamp unit be prepared earlier.

If you continue to use the lamp unit after 5 000 hours has elapsed, the lamp turns off automatically after approximately 10 minutes, as it will cause malfunction of the projector.

Lamp runtime	On-screen display REPLACE LAMP	LAMP indicator
Over 4 800 hours	The message is displayed for 30 seconds. If you press any button within the 30 seconds, the message disappears.	Lights in red (even in stand-by mode).
Over 5 000 hours	If the power is turned on without replacing the lamp, the power automatically turns off after approximately ten minutes to prevent the malfunction of the projector.	

Note

- To predict when to replace the lamp, check the lamp runtime displayed in [RUNTIME] in [STATUS] (➡ page 77).
- 5 000 hours of use is a rough guideline, but is not a guarantee. The lamp runtime differs depending on the setting of "LAMP POWER" menu.

Replacing the Lamp unit

Attention

- When the projector is mounted on a ceiling, do not work with your face close to the projector.
- Do not loosen other than designated screws.
- Attach the lamp unit and the lamp cover securely.

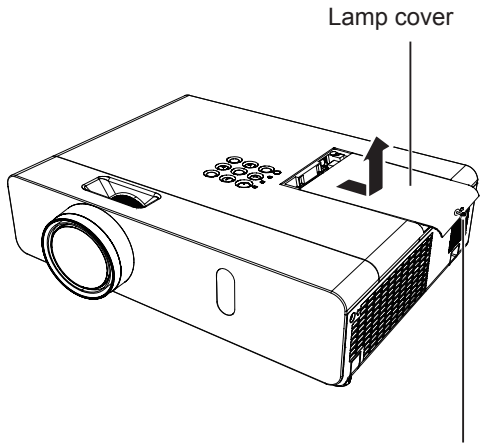

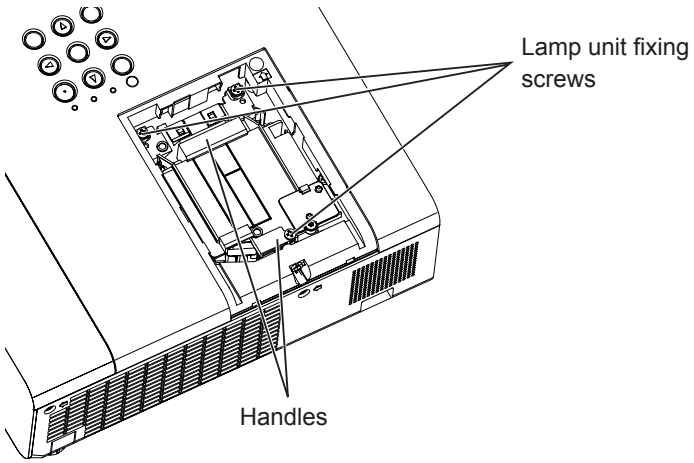

1) Turn off the Power by following the procedure in "Powering Off the Projector". (➡ page 45)
Remove the AC power plug from the wall outlet.

- Wait at least 1 hour and make sure the lamp unit and surroundings are cool.

2) Use a Phillips screwdriver to loosen the lamp cover fixing screw (×1) until it turns freely and remove the lamp cover.

- Remove the lamp cover by pulling it slowly toward the direction of the arrow.

3) Use a Phillips screwdriver to loosen the three lamp unit fixing screws (×3) until they turn freely.

4) Hold the used lamp unit by its handles, and pull it gently from the projector.

5) Insert the new lamp unit in correct direction. Tighten the three lamp unit fixing screws (×3) securely with a Phillips screwdriver.

- When you experience difficulty in installing the lamp unit, remove it and try again. If you use force to install the lamp unit, the connector may be damaged.

6) Attach the lamp cover.
Tighten the lamp cover fixing screw (×1) securely with a Phillips screwdriver.

- Perform Step 2) in the reverse order to attach the lamp cover.

Note

- When you replace the lamp unit with new one, the projector resets the runtime of the lamp unit automatically.

Troubleshooting

Please check following points. For details, see the corresponding pages.

Problem	Cause	Reference page
Power does not turn on.	• The power cord may not be connected. • No electric supply is at the wall outlet. • The circuit breakers have tripped. • Is the <LAMP> indicator or <WARNING > indicator lit or blinking? • The lamp cover has not been securely installed.	— — — 125 128
No picture appears.	• The video signal input source may not be connected to a terminal properly. • The input selection setting may not be correct. • The [BRIGHTNESS] adjustment setting may be at the minimum setting. • The input source which is connected to the projector may have a problem. • The AV MUTE function may be in use.	38 50 61 — 53, 76
The picture is fuzzy.	• The lens cap is still attached to the lens. • The lens focus may not have been set correctly. • The projector may not be at the correct distance from the screen. • The lens may be dirty. • The projector may be tilted too much.	23 46 33 20 —
The color is pale or grayish.	• [COLOR] or [TINT] adjustment may be incorrect. • The input source which is connected to the projector may not be adjusted correctly. • RGB cable is damaged.	61 — —
No sound from the internal speaker.	• The input terminals may not have been correctly connected. • The volume may have been set to the minimum level. • The AV MUTE function may have been turned on. • When the VARIABLE AUDIO OUT is plugged-in, the projector's built-in speaker is not available. • The MUTE function may have been turned on. • Is the audio input selection in [AUDIO SETTING] set correctly?	39 49, 81 53, 76 39 54, 81 82
The remote control does not operate.	• The batteries may be weak. • The batteries may not have been inserted correctly. • The remote control signal receptor on the projector may be obstructed. • The remote control unit may be out of the operation range. • Strong light such as fluorescent shine onto the signal receptor. • The [REMOTE CONTROLLER] setting is set to [DISABLE] in [CONTROL DEVICE SETUP]. • Is the ID number setting operation correct? • Check if the <ON/OFF> switch on the remote control is set to "ON".	— 29 26 26 26 87 54 25
Menu screen does not appear.	• Is the on-screen display function turned off (hidden)?	70
The control buttons of the projector do not operate.	• The [CONTROL PANEL] setting is set to [DISABLE] in [CONTROL DEVICE SETUP].	87
The picture does not display correctly.	• There may be a problem with the VCR or other signal source. • A signal which is not compatible with the projector is being input.	— 141
Picture from a computer does not appear.	• The cable may be longer than the optional cable. • The external video output from a laptop computer may not be correct.	— —
Picture from a HDMI device does not appear or picture is not stable.	• Is the HDMI cable securely connected? • Turn off the power of the projector and the connected devices. Then turn the power of the projector and the connected devices back on. • Isn't unsupported signal cable connected?	38, 39 — 141
No sound is output from a HDMI device.	• Set the sound channel of the attached device to Linear PCM.	—
EASY SETTING function is disabled.	• Turn off and turn on the power of the projector.	83

Attention

- If the problem persists, after confirming the contents of the table, please consult your dealer.

FAQ

Please refer to the following items if you have problems with the wireless LAN connection.

The wireless LAN connection is interrupted suddenly.

- The picture may disappear or freeze depending on the radio wave environment. In such cases, please try the following measures.
  - Please make the wireless LAN connection device close to the projector.
  - Place away from devices that can emit electromagnetic radiation, such as microwave ovens, game machines. Do not use these devices if you are still unable to solve the problem.
  - If multiple wireless devices are connected with the same router, the bandwidth will be insufficient.
  - Please prevent from using the projector in a location prone to static electricity, such as on a carpet.
- If it happens that the wireless LAN connection is cut off unexpectedly, please set [WIRELESS LAN] in the [NETWORK/USB] menu to [DISABLE], and then perform the wireless LAN connection again so that the wireless module will be restored to the normal state.

In addition, please refer to the following items if you have problems with the MIRRORING connection.

MIRRORING cannot be connected.

- Is the [WIRELESS LAN] menu set to [DISABLE]?
- Is the input source [MIRRORING] selected correctly?
- Is [MEMORY VIEWER] or [Panasonic APPLICATION] selected in [CONNECTION LOCK] menu?
  Please change the setting.
- Please check the setting of the Intel® WiDi / Intel® Pro WiDi / Miracast compatible device. For details about the connection method of MIRRORING, refer to the Operating Instructions of the Intel® WiDi / Intel® Pro WiDi / Miracast compatible device.
- Are there any obstacles between the Intel® WiDi / Intel® Pro WiDi / Miracast compatible device and the projector? In addition, is the Intel® WiDi / Intel® Pro WiDi / Miracast compatible device far from the projector?
  Please remove the obstacles or make the Intel® WiDi / Intel® Pro WiDi / Miracast compatible device close to the projector.
- The column "Paired devices" will remain the connection information such as the Intel® WiDi / Intel® Pro WiDi / Miracast compatible device etc., but you cannot reconnect with the screen, please connect with the devices that can be connected from the list.
- Cancel the sleep state or switch the log-on user of the Intel® WiDi / Intel® Pro WiDi / Miracast compatible device, the connection may be failed.
  Turn off / on the wireless LAN of the device, or turn the device and the projector off and then on again.
- If you cannot connect to the projector, or the projector is not existed in the available connection device list, you can try to switch the [AUTONOMOUS GROUP OWNER] menu to [OFF] or [ON].

Disconnected suddenly or Image cannot be updated.

- If the MIRRORING idle screen is not displayed, the sound cannot be output, the connection is failed, please re-boot the projector and then return the operation according to the following method.
  - Set [STANDBY MODE] to [ECO], turn off the power, and then turn on the power. (If [STANDBY MODE] is already set to [ECO], the procedure of the setting is not required.)
  - Please turn off the power and disconnect the power plug from the power outlet.
  - Please turn on the projector and the Intel® WiDi / Intel® Pro WiDi / Miracast compatible device.

The picture or sound of MIRRORING is distorted.

- Set the wireless LAN mode to [SIMPLE], [S-DIRECT] or [M-DIRECT].
- Since MIRRORING is connected wirelessly, the picture or sound may be distorted by the radio wave environment. In such cases, please try the following measures.
  - Please make the Intel® WiDi / Intel® Pro WiDi / Miracast compatible device close to the projector.
  - Place away from devices that can emit electromagnetic radiation, such as microwave ovens, game machines. Do not use these devices if you are still unable to solve the problem.
  - If multiple wireless devices are connected with the same router, the bandwidth will be insufficient.
- If there is a problem with the content itself, the picture may be distorted, please confirm the content.
- The picture or sound of MIRRORING is distorted depending on the Intel® WiDi / Intel® Pro WiDi / Miracast compatible device. It may be caused by the processing capability and the wireless transmission performance of the Intel® WiDi / Intel® Pro WiDi / Miracast compatible device, and it is not a malfunction of the projector.

The connection of MIRRORING will be interrupted if there is no operation after connecting with the MIRRORING.

- Depending on the configuration of your Intel® WiDi / Intel® Pro WiDi / Miracast compatible device, the connection may be lost in some time. Please check the saving power setting of the device.
- The problem will be improved by updating the wireless driver and firmware. Please contact with the manufacturer for the technical support about the device.

Others

- Depending on your Intel® WiDi / Intel® Pro WiDi / Miracast compatible device, the confirmation screen of the reconnection that is the connection name "from UNKNOWN" will be displayed. At this time, please select "CANCEL" to cancel reconnect.
- Depending on your Intel® WiDi / Intel® Pro WiDi / Miracast compatible device, it may be required to remove the profile during connecting. In that case, please remove the device according to the instructions.
- Depending on your Intel® WiDi / Intel® Pro WiDi / Miracast compatible Android device, when switching to Android device during MIRRORING connecting or the conference mode, the screen that is displayed on the device may not be projected for a while. In such a case, please wait for about ten seconds until it is projected. If it still cannot be projected, please establish the MIRRORING connection again.
- Depending on your Intel® WiDi / Intel® Pro WiDi / Miracast compatible Android device, the sound of the device may not be output from the projector during MIRRORING connecting. In such a case, please try the following things.
  - Please establish the MIRRORING connection again.
  - The problem may be improved by updating the firmware of the Android device. Please contact with the manufacturer for the technical support about the device.

Chapter 7 Appendix

This chapter describes specifications and after-sales service for the projector.

Technical Information

PJLink protocol

The network function of the projector supports PJLink class 1, and the PJLink protocol can be used to perform projector setting and projector status query operations from a computer.

Control commands

The following table lists the PJLink protocol commands that can be used to control the projector.

- x characters in tables are non-specific characters.

Command	Control details	Parameter / return string	Remark
POWR	Power supply control	0 1	Standby Power on
POWR ?	Power supply status query	0 1 2 3	Standby Power on Cool-down in progress Warm-up in progress
INPT	Input selection	11 12 21 22 31 51	RGB 1 RGB 2 VIDEO S-VIDEO HDMI NETWORK/USB
INPT ?	Input selection query		
AVMT	AV MUTE control	30 31	AV MUTE mode off AV MUTE mode on
AVMT ?	AV MUTE status query		
ERST ?	Error status query	××××××	1st byte: Indicates fan errors, range 0 – 2 2nd byte: Indicates lamp errors, range 0 – 2 3rd byte: Indicates temperature errors, range 0 – 2 4th byte: Fixed at 0 5th byte: Indicates filter errors, range 0 – 2 6th byte: Indicates other errors, range 0 – 2 • 0 = No error known • 1 = Warning • 2 = Error
LAMP ?	Lamp status query	××××××××××××	1st digits (1 – 5 digits) : Lamp cumulative operating time 2nd digit : 0 = Lamp off, 1 = Lamp on
INST ?	Input selection list query	11 12 21 22 31 51	
NAME ?	Projector name query	×××××	Returns the name set in [NAME CHANGE] of [NETWORK/USB].
INF1 ?	Manufacturer name query	Panasonic	Returns manufacturer name.
INF2 ?	Model name query	VW355N VX425N	Returns model name.
INF0 ?	Other information query	×××××	Returns information such as version number.
CLSS ?	Class information query	1	Returns class for PJLink.

PJLink security authorization

The password used for PJLink is the same as that of the password set for web control.

When using the projector without security authentication, do not set a password for web control.

- For specifications related to PJLink, refer to the website of Japan Business Machine and Information System Industries Association.
  URL http://pjlink.jbmia.or.jp/english/

Control commands via LAN

When WEB Control administrator rights password is set (Protect mode)

Connection method

1) Obtain the IP address and port number (Initial set value = 1 024) of the projector and make a request for connection to the projector.

- Acquire the IP address from the menu screen of the projector, and the port number from the WEB control page.

IP address :	Obtain from MAIN MENU → [NETWORK/USB] → [STATUS]
Port No. :	Acquire from the WEB control → [Detailed set up] → [Port set up] page

2) There is a response from the projector.

	Data section	Blank	Mode	Blank	Random number section	Termination symbol
Command example	“NTCONTROL” (ASCII string)	‘ ’ 0x20	‘1’ 0x31	‘ ’ 0x20	“zzzzzzzz” (ASCII code hexadecimal number)	(CR) 0x0d
Data length	9 bytes	1 byte	1 byte	1 byte	8 bytes	1 byte

- Mode : 1 = Protect mode

3) Generate a 32-byte hash value from the following data using MD5 algorithm.

- “xxxxxx:yyyyy:zzzzzzzz”

xxxxxx :	Administrator rights user name for WEB CONTROL (Default user name is “admin1”)
yyyyy :	Password of above administrator rights user (Default password is “panasonic”)
zzzzzzzz :	8-byte random number obtained in Step 2

Command transmission method

Transmit using the following command format.

■ Transmitted data

	Header			Data section	Termination symbol
Command example	Hash value (See above <Connection method>)	‘0’ 0x30	‘0’ 0x30	Control command (ASCII string)	(CR) 0x0d
Data length	32 bytes	1 byte	1 byte	Undefined length	1 byte

■ Receive data

	Header		Data section	Termination symbol
Command example	‘0’ 0x30	‘0’ 0x30	Control command (ASCII string)	(CR) 0x0d
Data length	1 byte	1 byte	Undefined length	1 byte

■ Error response

	String	Details	Termination symbol
Message	"ERR1"	Undefined control command	(CR) 0x0d
	"ERR2"	Out of parameter range	
	"ERR3"	Busy state or no-acceptable period	
	"ERR4"	Timeout or no-acceptable period	
	"ERR5"	Wrong data length	
	"ERRA"	Password mismatch	
Data length	4 bytes	—	1 byte

When WEB Control administrator rights password is not set (Non-protect mode)

Connection method

1) Obtain the IP address and port number (Initial set value = 1 024) of the projector and make a request for connection to the projector.

- Acquire the IP address from the menu screen of the projector, and the port number from the WEB control page.

IP address :	Obtain from main menu → [NETWORK/USB] → [STATUS]
Port No. :	Acquire from the WEB control → [Detailed set up] → [Port set up] page

2) There is a response from the projector.

■ Response data

	Data section	Blank	Mode	Termination symbol
Command example	“NTCONTROL” (ASCII string)	‘ ’ 0x20	‘0’ 0x30	(CR) 0x0d
Data length	9 bytes	1 byte	1 byte	1 byte

- Mode : 0 = Non-protect mode

Command transmission method

Transmit by the following command format.

■ Transmitted data

	Header		Data section	Termination symbol
Command example	‘0’ 0x30	‘0’ 0x30	Control command (ASCII string)	(CR) 0x0d
Data length	1 byte	1 byte	Undefined length	1 byte

■ Receive data

	Header		Data section	Termination symbol
Command example	‘0’ 0x30	‘0’ 0x30	Control command (ASCII string)	(CR) 0x0d
Data length	1 byte	1 byte	Undefined length	1 byte

■ Response data

	String	Details	Termination symbol
Message	"ERR1"	Undefined control command	(CR) 0x0d
	"ERR2"	Out of parameter range	
	"ERR3"	Busy state or no-acceptable period	
	"ERR4"	Timeout or no-acceptable period	
	"ERR5"	Wrong data length	
	"ERRA"	Password mismatch	
Data length	4 bytes	—	1 byte

Serial terminal

The serial connector which is on the connector panel of the projector conforms to the RS-232C interface specification, so that the projector can be controlled by a personal computer which is connected to this connector.

Connection

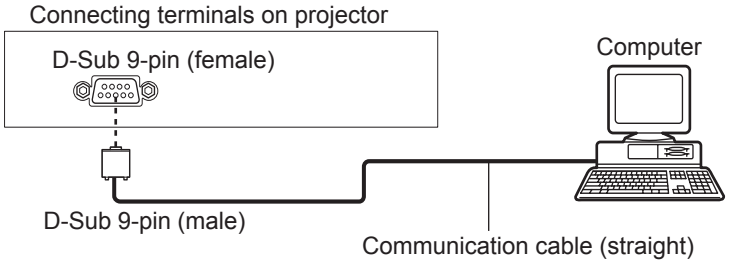

Pin assignments and signal names

D-Sub 9-pin (female)
Outside view

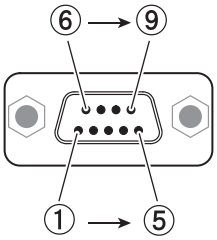

Pin No.	Signal name	Contents
①	—	NC
②	TXD	Transmitted data
③	RXD	Received data
④	—	NC
⑤	GND	Earth
⑥	—	NC
⑦	CTS	Connected internally
⑧	RTS	
⑨	—	NC

Communication conditions (Factory default)

Signal level	RS-232C-compliant
Sync. method	Asynchronous
Baud rate	9 600 bps
Parity	None
Character length	8 bits
Stop bit	1 bit
X parameter	None
S parameter	None

Basic format

Transmission from the computer starts with STX, then the ID, command, parameter, and ETX are sent in this order. Add parameters according to the details of control.

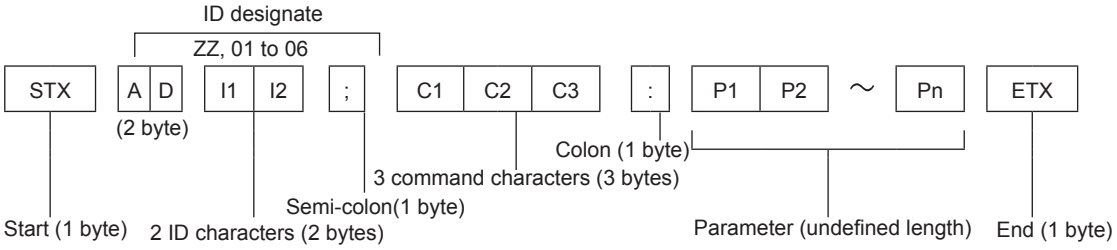

Basic format (with sub command)

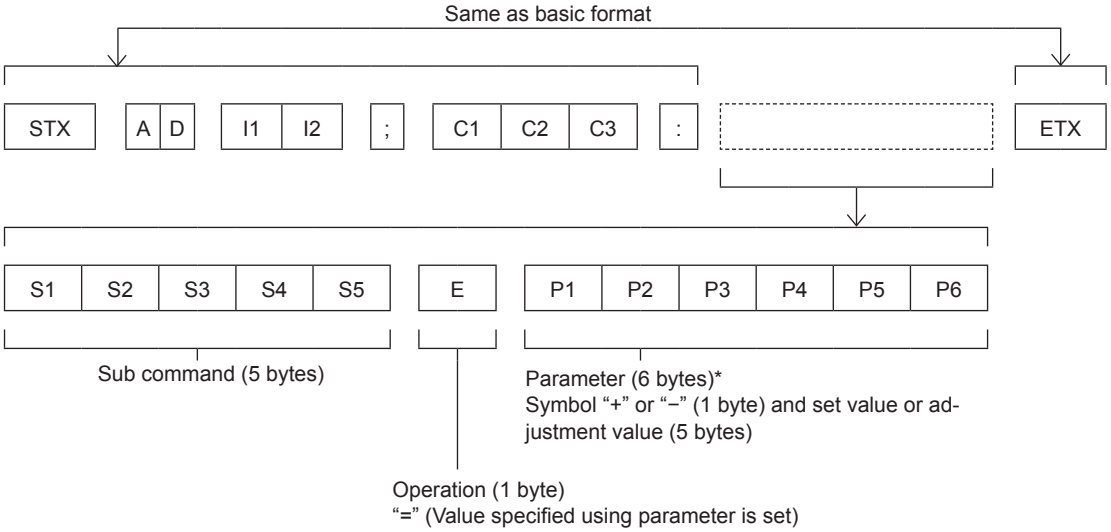

* When transmitting a command which does not need a parameter, the operation (E) and parameter are not necessary.

Attention

- If a command is transmitted after the lamp starts illuminating, there may be a delay in response or the command may not be executed. Try sending or receiving any command after 60 seconds.
- When transmitting multiple commands, be sure to wait until 0.5 seconds has elapsed after receiving the response from the projector before sending the next command. When transmitting a command which does not need a parameter, a colon (:) is not necessary.

Note

- If a command cannot be executed, the "ER401" response is sent from the projector to the computer.
- If an invalid parameter is sent, the "ER402" response is sent from the projector to the computer.
- ID transmission in RS-232C supports ZZ (ALL) and 01 to 06.
- If a command is sent with a specified ID, a response will be sent to the computer only in the following cases.
  - It matches the projector ID.
  - [PROJECTOR ID] (➡ page 78) is set to [ALL].
- STX and ETX are character codes. STX shown in hexadecimal is 02, and ETX shown in hexadecimal is 03.

Cable specifications

[When connected to a computer]

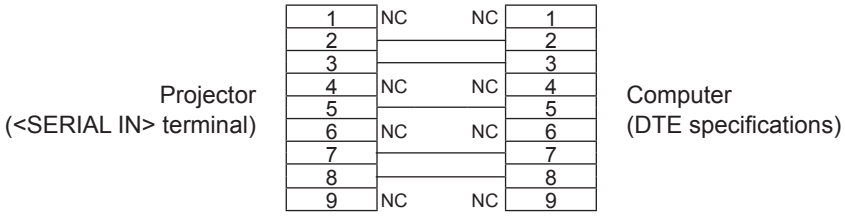

Control commands

When controlling the projector from a computer, the following commands are available.

■ Projector control command

Command	Control contents	Parameter / return string	Remarks
PON	Power on	—	To check if the power is on, use the “Power query” command.
POF	Power off		
IIS	INPUT selection	VID SVD RG1 RG2 HD1 NWP PA1 MC1 MV1	VIDEO S-VIDEO RGB1 RGB2 HDMI NETWORK Panasonic APPLICATION MIRRORING MEMORY VIEWER
OFZ	Freeze	0	[OFF]
		1	[ON]
AUU	Volume up		
AUD	Volume down		
DZU	D. ZOOM up		
DZD	D. ZOOM down		
OSH	AV mute function	0 1	AV MUTE mode off AV MUTE mode on
QPW	Power query	000	Standby
		001	Power on
Q$S	Lamp condition query	0 1 2 3	Stand-by Lamp ON control active Lamp ON Lamp OFF control active

[MENU LOCK PASSWORD] operations

To revert to the factory default password (AAAA), perform the following operations while the screen prompting input of [MENU LOCK PASSWORD] is displayed.

1) Press the <AUTO SETUP/CANCEL> button on the remote control for at least three seconds.

2) Press ▼ for at least three seconds.

Two window display combination list

		Sub Window					
		COMPUTER1		COMPUTER2	HDMI	VIDEO	S-VIDEO
Main Window		RGB	YC_BC_R/YP_BP_R	RGB			
COMPUTER1	RGB	—	—	—	✓	—	—
	YC_BC_R/YP_BP_R	—	—	—	✓	—	—
COMPUTER2	RGB	—	—	—	✓	—	—
HDMI		✓	✓	✓	—	✓	✓
VIDEO		—	—	—	✓	—	—
S-VIDEO		—	—	—	✓	—	—

✓ : Picture in Picture combinations are enabled.
—: Picture in Picture combinations are disabled.

Note

- [MEMORY VIEWER], [MIRRORING] and [Panasonic APPLICATION] do not support two window display function.
- When setting the movie-based signal 1080/24p, 1080/24sF,1080/25p, 1080/30p, 1080/50p or 1080/60p for HDMI input, the two window display function will be disabled.
- The image of the sub window picture may be distorted depending on the combination of signals.
- When the selected input combinations or the input signals are not correspond with the two window display, the message "CANNOT DISPLAY THIS INPUT COMBINATION IN P IN P" will be displayed.

List of compatible signals

The following table specifies the type of signals compatible with the projectors.

- Symbols that indicate formats are as follows.
  V = VIDEO, S = S-VIDEO, R = RGB, Y = YCBCR/YPBPR, H = HDMI

Mode	Display resolution (dots)	Scanning frequency		Dot clock frequency (MHz)	Format*1	PnP*2	
		H (kHz)	V (Hz)			COMPUTER1/ COMPUTER2	HDMI
NTSC/NTSC4.43/ PAL-M/PAL60	720 x 480i	15.7	59.9	—	V/S	—	—
PAL/PAL-N/SECAM	720 x 576i	15.6	50.0	—	V/S	—	—
525i (480i)	720 x 480i	15.7	59.9	13.5	R/Y	—	—
625i (576i)	720 x 576i	15.6	50.0	13.5	R/Y	—	—
525i (480i)	720 (1 440) x 480i*3	15.7	59.9	27.0	H	—	—
625i (576i)	720 (1 440) x 576i*3	15.6	50.0	27.0	H	—	—
525p (480p)	720 x 483	31.5	59.9	27.0	R/Y/H	—	✓
625p (576p)	720 x 576	31.3	50.0	27.0	R/Y/H	—	✓
750 (720) /60p	1 280 x 720	45.0	60.0	74.3	R/Y/H	—	✓
750 (720) /50p	1 280 x 720	37.5	50.0	74.3	R/Y/H	—	✓
1125 (1080) /60i*4	1 920 x 1 080i	33.8	60.0	74.3	R/Y/H	—	✓
1125 (1080) /50i	1 920 x 1 080i	28.1	50.0	74.3	R/Y/H	—	✓
1125 (1080) /24p	1 920 x 1 080	27.0	24.0	74.3	R/Y/H	—	✓
1125 (1080) /24sF	1 920 x 1 080i	27.0	48.0	74.3	R/Y/H	—	—
1125 (1080) /25p	1 920 x 1 080	28.1	25.0	74.3	R/Y/H	—	—
1125 (1080) /30p	1 920 x 1 080	33.8	30.0	74.3	R/Y/H	—	—
1125 (1080) /60p	1 920 x 1 080	67.5	60.0	148.5	R/Y/H	—	✓
1125 (1080) /50p	1 920 x 1 080	56.3	50.0	148.5	R/Y/H	—	✓
VESA400	640 x 400	31.5	70.1	25.2	R/H	—	—
	640 x 400	37.9	85.1	31.5	R/H	—	—
VGA	640 x 480	31.5	59.9	25.2	R/H	✓	✓
	640 x 480	35.0	66.7	30.2	R/H	✓	—
	640 x 480	37.9	72.8	31.5	R/H	✓	—
	640 x 480	37.5	75.0	31.5	R/H	✓	—
	640 x 480	43.3	85.0	36.0	R/H	—	—
SVGA	800 x 600	35.2	56.3	36.0	R/H	✓	—
	800 x 600	37.9	60.3	40.0	R/H	✓	✓
	800 x 600	48.1	72.2	50.0	R/H	✓	—
	800 x 600	46.9	75.0	49.5	R/H	✓	—
	800 x 600	53.7	85.1	56.3	R/H	—	—
MAC16	832 x 624	49.7	74.6	57.3	R/H	✓	—
XGA	1 024 x 768	39.6	50.0	51.9	R/H	—	—
	1 024 x 768	48.4	60.0	65.0	R/H	✓	✓
	1 024 x 768	56.5	70.1	75.0	R/H	✓	—
	1 024 x 768	60.0	75.0	78.8	R/H	✓	—
	1 024 x 768	65.5	81.6	86.0	R/H	—	—
	1 024 x 768	68.7	85.0	94.5	R/H	—	—
	1 024 x 768	81.4	100.0	113.3	R/H	—	—
MXGA	1 152 x 864	64.0	70.0	94.2	R/H	—	—
	1 152 x 864	67.5	75.0	108.0	R/H	—	—
	1 152 x 864	77.1	85.0	119.7	R/H	—	—
MAC21	1 152 x 870	68.7	75.1	100.0	R/H	—	—
1280 x 720	1 280 x 720	37.1	50.0	60.5	R/H	—	—
	1 280 x 720	44.8	60.0	74.5	R/H	—	—
1280 x 768	1 280 x 768	60.3	74.9	102.3	R/H	—	—
	1 280 x 768	68.6	84.8	117.5	R/H	—	—

Mode	Display resolution (dots)	Scanning frequency		Dot clock frequency (MHz)	Format*1	PnP*2	
		H (kHz)	V (Hz)			COMPUTER1/ COMPUTER2	HDMI
1280 x 800	1 280 x 800	41.3	50.0	68.0	R/H	—	—
	1 280 x 800	49.7	59.8	83.5	R/H	✓	✓
MSXGA	1 280 x 960	60.0	60.0	108.0	R/H	—	—
SXGA	1 280 x 1 024	64.0	60.0	108.0	R/H	✓	✓
	1 280 x 1 024	80.0	75.0	135.0	R/H	✓	—
	1 280 x 1 024	91.1	85.0	157.5	R/H	—	—
1366 x 768	1 366 x 768	39.6	49.9	69.0	R/H	—	—
	1 366 x 768	47.7	59.8	85.5	R/H	✓	✓
SXGA+	1 400 x 1 050	65.2	60.0	122.6	R/H	—	—
	1 400 x 1 050	82.3	74.9	156.0	R/H	—	—
WXGA+	1 400 x 900*5	55.5	59.9	88.8	R/H	—	—
1600 x 900	1 600 x 900	46.3	50.0	97.0	R/H	—	—
	1 600 x 900	55.9	60.0	119.0	R/H	✓	✓
UXGA	1 600 x 1 200	75.0	60.0	162.0	R/H	✓	✓
WSXGA+	1 680 x 1 050	65.2	60.0	147.1	R/H	✓	✓
1920 x 1080	1 920 x 1 080*5	66.6	59.9	138.5	R/H	—	—
WUXGA	1 920 x 1 200*5	74.0	60.0	154.0	R/H	—	—

*1 <COMPUTER 2 IN> terminal is only for RGB signals input.
*2 Where marked "✓" signals indicates in Plug and Play is compatible with EDID of projector. Unmarked signals in Plug and Play may also be compliant if input terminals are written in the format list. Where Plug and Play is unmarked and nothing is written in the format list, difficulties in projecting image may occur even when computer and projector appear to have same resolution.
*3 Pixel-Repetition signal (dot clock frequency 27.0 MHz) only
*4 When a 1125 (1035)/60i signal was input, it is displayed as a 1125 (1080)/60i signal.
*5 VESA CVT-RB (Reduced Blanking)-compliant.

Note

- The number of display dots is 1 280 x 800 for the PT-VW355N and 1 024 x 768 for the PT-VX425N.
  A signal with a different resolution will be projected after converting the resolution to match the projector display.
- “i” added to the resolution value indicates an interlaced signal.
- When interlaced signals are connected, flicker may occur on the projected image.

Glossary for network functions

Item	Descriptions
Access point	These are stations for relaying electromagnetic signals between computers in a wireless LAN. When a computer is connected to an access point, it can communicate through the network connected to the access point.
AES	Next generation standard cryptography standardized by the National Institute of Standards and Technology (NIST). AES: Advanced Encryption Standard
DEFAULT GATEWAY	The devices that are used for different network standards from yours. Default Gateway enables a connection with other network, by adjusting bilateral differences such as communication protocols. If no gateway is specified for the IP address of access destination, data will be sent to the host set as the default gateway.
DHCP	Abbreviation for Dynamic Host Configuration Protocol. This function automatically assigns IP addresses to the connected equipment. If a device with the DHCP server function is present within a LAN, it automatically assigns IP addresses to the connected equipment.
EAP	Abbreviation of PPP Extensible Authentication Protocol. An authentication protocol extended from PPP, which is used for user authentication for remote access. MD5, TLS, S/Key, etc. are supported as authentication methods. This protocol is adopted by the wireless LAN authentication standard IEEE802.1X, and available methods include EAP-TLS/EAP-TTLS/EAP-LEAP/EAP-PEAP/EAP-MD5.
EAP-FAST	Abbreviation of EAP-Flexible Authentication via Secure Tunneling. It is one of the wireless authentication methods compatible with IEEE802.1X. It does not require digital authentication, but establishes a tunnel for the authentication process using a secret key cryptosystem, and authenticates the tunnel mutually to improve security. Cisco's proprietary method.
EAP-TTLS	Abbreviation of EAP-Tunneled Transport Layer Security. It is one of the wireless authentication methods compatible with IEEE802.1X. It performs mutual authentication with a digital certificate by the authentication server, and ID/password by the client. A tunnel is established for the authentication process. Developed by Func Software in the U.S.
GTC (EAP-GTC)	Abbreviation of EAP-Generic Token Card. It is one of the wireless authentication methods compatible with IEEE802.1X. Authentication is performed with ID and password. Password is acquired from a security token.
IP ADDRESS	Internet Protocol (IP) is a protocol for distributing data, and the address corresponding to the data distribution destination is called the IP address. The same IP address cannot be used within the same LAN.
LAN	Abbreviation for Local Area Network. This is a network with a relatively narrow range such as inside a company.
MAC Address	Each network adapter has its own ID No. A discrete ID No. is assigned to each and every network adapter around the world. These IDs are used to exchange data between adapters. These IDs are a combination of a discrete number managed and assigned by the IEEE to each individual manufacturer and a unique number assigned to each individual adapter by the manufacturer.
MD5 (EAP-MD5)	Abbreviation of EAP-Message digest algorithm 5. It is one of the wireless authentication methods compatible with IEEE802.1X. Authentication is performed with ID and password. Password is sent encrypted with challenge & response method.
Miracast	Developed by the Wi-Fi Alliance, a standard for transmitting the screen of the device wirelessly.
MS-CHAPv2 (EAP-MS-CHAPv2)	Abbreviation of EAP-Microsoft Challenge Handshake Authentication Protocol v2. It is one of the wireless authentication methods compatible with IEEE802.1X.It performs mutual authentication using a one-way encrypted password.
Open System / OPEN	This is an authentication of wireless signals employing a public key encryptosystem.
PEAP	Abbreviation for EAP-Protected EAP. It is one of the wireless authentication methods compatible with IEEE802.1X. It performs mutual authentication with a digital certificate by the authentication server, and ID/password by the client.

Item	Descriptions
RADIUS server	RADIUS is an abbreviation of Remote Access Dial In User authentication Service, and it is a protocol used for authentication in various networks such as wireless LAN. An authentication server compatible with the protocol is called a RADIUS server. The RADIUS server eliminates the need of registering user information separately in each device even when there are multiple network devices, and enables integrated management of multiple network devices and users.
Shared Key / SHARED	This is a secret key encryptosystem for wireless signals in which authentication is performed with a key pre-set in the WEP. Other terms for this method, in which the same key is used for both encryption and decryption, are “shared key encryptosystem” and “common key encryptosystem”.
SSID	Abbreviation for Service Set ID. The SSID identification code must be set to distinguish equipment included in a wireless LAN that uses access points from equipment not included in that LAN. This may appear as the “ESSID” or the “network name” for wireless LAN adapters made by some manufacturers.
SUBNET MASK	This limits the range of the IP addresses assigned to computers in order to divide the network into a number of sections during TCP/IP connection. The value used to divide the network at this time is called the subnet mask.
TKIP	Abbreviation for Temporal Key Integrity Protocol. This encryption protocol provides even greater security than WEP because it changes the encryption key at fixed intervals.
WEP	Abbreviation for Wired Equivalent Privacy. This is a method for encrypting communication data. The encryption key is created and notified only to the communicating user, so the communication data cannot be decrypted by a third party.
WPA-EAP **WPA2-EAP**	Standard for the encryption method for wireless LAN. This is an encryption method for corporations, and encryption is performed using the external server.
WPA-PSK **WPA2-PSK**	This is a standard covering encryption methods used in wireless LAN. It provides greater security than WEP, and has functions such as a user authentication function and also TKIP (encryption protocol) which automatically changes the encryption key at fixed intervals. And this authentication requires no authentication server.

Specifications

Power supply			For North America: 120 V ∼ (120 V alternating current), 50 Hz/60 Hz For other countries: 100 V - 240 V ∼ (100 V - 240 V alternating current), 50 Hz/60 Hz
Power consumption	**Projecting**		For North America: 3.2 A, 320 W For other countries: 3.7 A-1.5 A, 320 W
	In standby mode		When [STANDBY MODE] of [ECO MANAGEMENT] is set to [ECO] : 0.5 W *1 When [STANDBY MODE] of [ECO MANAGEMENT] is set to [NETWORK] : 6 W *2 When [STANDBY MODE] of [ECO MANAGEMENT] is set to [NORMAL] : 14 W When [STANDBY MODE] of [ECO MANAGEMENT] is set to [NORMAL], and [IN STANDBY MODE] of [AUDIO SETTING] is set to [ON] : 28 W
LCD panel	**Panel size**	**PT-VW355N**	1.5 cm (0.59") (aspect ratio 16 : 10)
		PT-VX425N	1.6 cm (0.63") (aspect ratio 4 : 3)
	Display method		3 transparent LCD panels (RGB)
	Drive method		Active matrix method
	Pixels	**PT-VW355N**	1 024 000 (1 280 x 800) x 3 panels
		PT-VX425N	786 432 (1 024 x 768) x 3 panels
Lens			Manual zoom : 1.6x Manual focus : F 1.6 to 1.9, f 15.31 mm to 24.64 mm
Luminous lamp			240 W UHM lamp
Light output *3		**PT-VW355N**	4 000 lm
		PT-VX425N	4 500 lm
Contrast ratio *3			12 000 : 1 (all white / all black) ([LAMP POWER] is set to [NORMAL], meanwhile [IRIS] is set to [ON])
Applicable scanning frequency *4	**for Video signal (including S-video)**		Horizontal : 15.73 kHz, Vertical : 59.94 Hz Horizontal : 15.63 kHz, Vertical : 50 Hz
	for RGB signal		Horizontal 15 kHz to 100 kHz, Vertical 50 Hz to 100 Hz
			Dot clock frequency: 140 MHz or less
	for YP_BP_R signal		[525i(480i)] Horizontal 15.73 kHz, Vertical 59.94 Hz [625i(576i)] Horizontal 15.63 kHz, Vertical 50 Hz [525p(480p)] Horizontal 31.47 kHz, Vertical 59.94 Hz [625p(576p)] Horizontal 31.25 kHz, Vertical 50 Hz [750(720)/60p] Horizontal 45.00 kHz, Vertical 60 Hz [750(720)/50p] Horizontal 37.50 kHz, Vertical 50 Hz [1125(1080)/60i] Horizontal 33.75 kHz, Vertical 60 Hz [1125(1080)/50i] Horizontal 28.13 kHz, Vertical 50 Hz [1125(1080)/60p] Horizontal 67.50 kHz, Vertical 60 Hz [1125(1080)/50p] Horizontal 56.25 kHz, Vertical 50 Hz [1125(1080)/24p] Horizontal 27.00 kHz, Vertical 24 Hz [1125(1080)/24sF] Horizontal 27.00 kHz, Vertical 48 Hz [1125(1080)/25p] Horizontal 28.13 kHz, Vertical 25 Hz [1125(1080)/30p] Horizontal 33.75 kHz, Vertical 30 Hz
	for HDMI signal		525i(480i)*5, 625i(576i)*5, 525p(480p), 625p(576p), 750(720)/60p, 750(720)/50p, 1125(1080)/24p, 1125(1080)/24sF, 1125(1080)/30p, 1125(1080)/60p, 1125(1080)/50p, 1125(1080)/60i, 1125(1080)/50i Displayable resolution: VGA to WUXGA (non-interlace) Dot clock frequency: up to 162 MHz
Color system			7 (NTSC, NTSC4.43, PAL, PAL-N, PAL-M, SECAM, PAL60)
Projection size			0.76 m -7.62 m (30"-300")
Screen aspect ratio		**PT-VW355N**	16 : 10
		PT-VX425N	4 : 3
Projection scheme			[FRONT/DESK], [FRONT/CEILING], [REAR/DESK], [REAR/CEILING] (Menu setting system)
Speaker			1 (4.0 cm round-type)
Maximum usable volume output			10 W

Terminals	<COMPUTER 1 IN>	1 (High-density D-sub 15 pin female) [RGB signal] 0.7 V [p-p] 75 Ω (When G-SYNC: 1.0 V [p-p] 75 Ω) HD/SYNC TTL high impedance, automatic positive/negative polarity compatible VD TTL high impedance, automatic positive/negative polarity compatible (SYNC/HD and VD do not support 3 value SYNC.) [YP_BP_R signal] Y: 1.0 V [p-p] including synchronization signal, P_BP_R: 0.7 V [p-p] 75 Ω
	<COMPUTER 2 IN/1 OUT>	1 (High-density D-sub 15 pin female) [RGB signal] 0.7 V [p-p] 75 Ω (When G-SYNC: 1.0 V [p-p] 75 Ω) HD/SYNC TTL high impedance, automatic positive/negative polarity compatible VD TTL high impedance, automatic positive/negative polarity compatible (SYNC/HD and VD do not support 3 value SYNC.)
	<VIDEO IN>	1 (Pin jack 1.0 V [p-p] 75 Ω)
	<S-VIDEO IN>	1 (Mini DIN 4 pin, Y 1.0 V [p-p], C 0.286 V [p-p] 75 Ω, S1 signal compatible)
	<HDMI IN>	1 (HDMI 19 pin, HDCP and Deep color compatible) Audio signals: Linear PCM (Sampling frequency: 48 kHz/44.1 kHz/32 kHz)
	<AUDIO IN>	2 (M3 stereo mini jack, 0.5 V [rms], input impedance 22 kΩ and more) (<AUDIO IN 2 (MIC IN)> terminal support MIC input) 1 (Pin jack x 2 (L-R), 0.5 V [rms], input impedance 22 kΩ and more)
	<VARIABLE AUDIO OUT>	1 (M3 stereo mini jack, stereo monitor output compatible, 0 V [rms] to 2.0 V [rms] variable, output impedance 2.2 kΩ and less)
	<USB A/VIEWER>	USB connector (type A x 1)
	<USB B/DISPLAY>	USB connector (type B x 1)
	<SERIAL IN>	1 (D-sub 9 pin, RS-232C compliant, for computer control use)
	<LAN>	1 (for RJ-45 network connection, PJLink compatible, 10Base-T/100Base-TX)
Wireless LAN	Specification standards	For North America: IEEE802.11b/g/n : 2.412 GHz - 2.462 GHz IEEE802.11a/n : 5.180 GHz - 5.825 GHz (except 5.600 GHz - 5.650 GHz) For other counties: IEEE802.11b/g/n : 2.412 GHz - 2.472 GHz IEEE802.11a/n : 5.745 GHz - 5.805 GHz
	Modulation	DBPSK, DQPSK, CCK, BPSK, QPSK, 16QAM, 64QAM, MIMO
	Transmission speed	IEEE 802.11b : Up to 11 Mbps IEEE 802.11b/a : Up to 54 Mbps IEEE 802.11n : Up to 300 Mbps
	Wireless channel	For North America: IEEE802.11b/g/n: 1~11 channel IEEE802.11a/n: 36/40/44/48/52/56/60/64/100/104/108/112/116/132/136/140/149/153/157/161/165 channel For other counties: IEEE802.11b/g/n: Passive scanning IEEE802.11a/n: Passive scanning
	Communication distance	Approx. 30 m (98'5") (depends on the usage environment)
	Security	Infrastructure mode WPA-PSK (TKIP/AES), WPA2-PSK (TKIP/AES), WEP (128 bit/64 bit), WPA-EAP/WPA2-EAP (PEAP [MS-CHAPv2/GTC], EAP-FAST [MS-CHAPv2/GTC], EAP-TTLS [MD5/MS-CHAPv2]
Power cable length		2.0 m (78-3/4")
Cabinet		Molded plastic
Dimensions		Width: 352 mm (13-7/8") Height: 98 mm (3-27/32") (when the adjustable feet shortened) Depth: 279.4 mm (11")
Weight		Approx. 3.4 kg (7.5 lbs.) *6
Noise level *3		When set to [NORMAL] in [LAMP POWER] : 37 dB When set to [ECO] in [LAMP POWER] : 29 dB

Operating environment		Operating environment temperature *7: 0 °C (32 °F) to 40 °C (104 °F) (Elevation: below 1 400 m; [HIGH ALTITUDE MODE]: [OFF]) 0 °C (32 °F) to 30 °C (86 °F) (Elevation: 1 400 m ~ 2 000 m; [HIGH ALTITUDE MODE]: [HIGH1]) 0 °C (32 °F) to 30 °C (86 °F) (Elevation: 2 000 m ~ 2 700 m; [HIGH ALTITUDE MODE]: [HIGH2]) Operating environment humidity: 20 % to 80 % (no condensation)
Remote control	**Power supply**	DC 3 V (battery (AAA/R03 or AAA/LR03 Type) x 2)
	Operating range	Approx. 7 m (22'11-5/8") (when operated directly in front of receptor)
	Weight	102 g (3.60 ozs.) (including batteries)
	Dimensions	Width : 48 mm (1-7/8"), Length : 145 mm (5-23/32"), Height : 27 mm (1-1/16")

*1 When the [PROJECTOR SETUP] menu → [ECO MANAGEMENT] → [STANDBY MODE] is set to [ECO], the network function (both wireless LAN and wired LAN) cannot be used in standby mode.
*2 When the [PROJECTOR SETUP] menu → [ECO MANAGEMENT] → [STANDBY MODE] is set to [NETWORK], only the Wake on LAN function can be used in standby mode via wired LAN. When the [PROJECTOR SETUP] menu → [ECO MANAGEMENT] → [STANDBY MODE] is set to [NETWORK], the power consumption is normally within 6 W in standby status. If the input source was switched to [MEMORY VIEWER] or [Panasonic APPLICATION] before the projector turns into standby, the power consumption in standby status may be more than 6 W.
*3 Measurement, measuring conditions and method of notation all comply with ISO21118 international standards.
*4 For details of video signals that can be projected using this projector, refer to “List of compatible signals”. (➡ page 141)
*5 Pixel-Repetition signal (dot clock frequency 27.0 MHz) only
*6 This is an average value. It may differ depending on individual product.
*7 [LAMP POWER] will be switched to [ECO] automatically when the operating environment temperature is 35 °C to 40 °C.

Note

- The part numbers of accessories and separately sold components are subject to change without notice.

Dimensions

<Unit : mm (inch)>

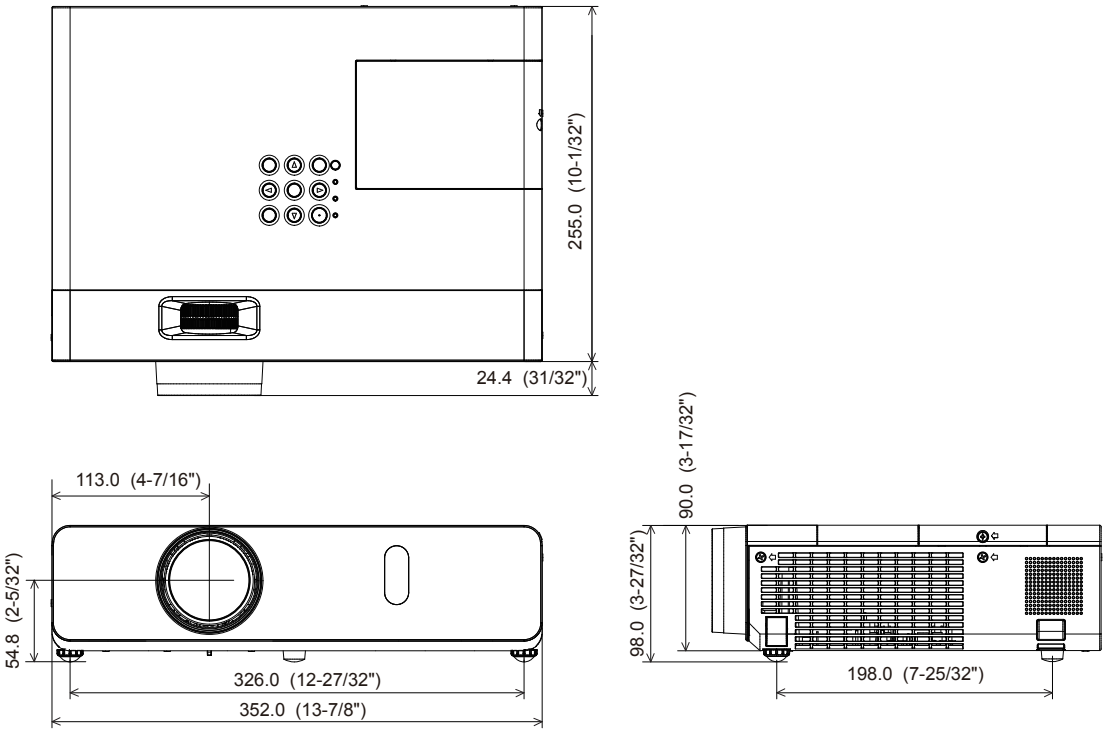

∗ Actual dimension may differ by product.

Ceiling mount bracket safeguards

- When installing the projector to a ceiling, be sure to use the specified optional Ceiling Mount Bracket for Projectors.
  Model No. of ceiling mount bracket:
  ① ET-PKL100H (for high ceilings), ET-PKV400B (Projector Mount Bracket)
  ② ET-PKL100S (for low ceilings), ET-PKV400B (Projector Mount Bracket)
- When installing the projector, attach the drop-prevention kit included with the Ceiling Mount Bracket for Projectors.
- Ask a qualified technician to do the installation work such as mounting the projector on the ceiling.
- Panasonic takes no responsibility for any damage to the projector resulting from use of a ceiling mount bracket not manufactured by Panasonic or the inappropriate choice of location for installation, even if the warranty period of the projector has not expired.
- Unused products must be removed promptly by a qualified technician.
- Use a torque screwdriver or Allen torque wrench to tighten bolts to their specified tightening torques. Do not use electric screwdrivers or impact screwdrivers.
- Read the Installation Instructions for the Ceiling Mount Bracket for Projectors for details.
- The model numbers of accessories and optional accessories are subject to change without prior notice.

Bottom view

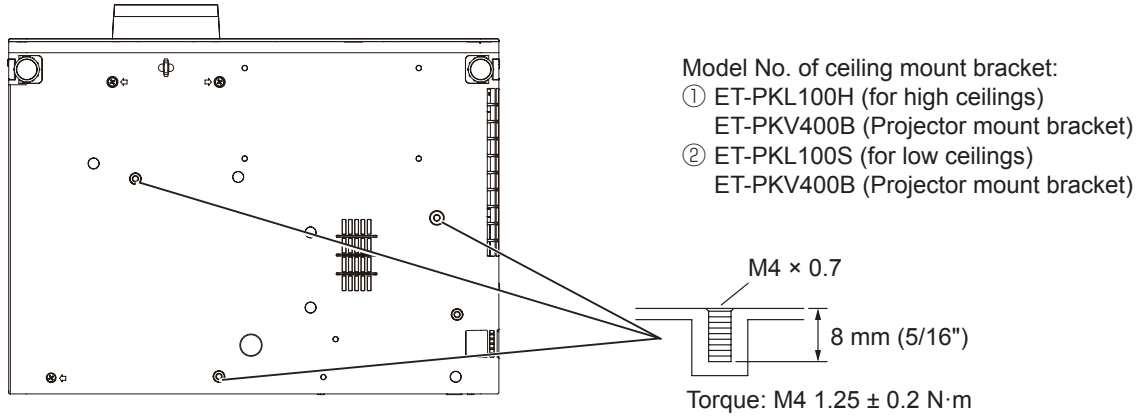

Index

A
About MIRRORING 123
Accessing from the Web browser 99
Accessories 23
<AC IN> terminal 26
Adjusting adjustable feet 35
[ADVANCED MENU] 62
[AMX D.D.] 93
[ASPECT] 68
Attaching the Lens Cap 30
[AUDIO SETTING] 81
<AUTO SETUP/CANCEL> button
Remote control 25, 49
[AUTO SETUP SETTING] 73
<AV MUTE> button
Remote control 25, 53

B
[BACK COLOR] 73
Basic operations by using the remote control 49
[BRIGHTNESS] 61

C
CD-ROM 24
Ceiling mount bracket safeguards .. 147
[CLOCK PHASE] 67
[CLOSED CAPTION SETTING] 71
[COLOR] 61
[COLOR TEMPERATURE] 62
<COMPUTER 1> button
Remote control 25, 50
<COMPUTER 2> button
Remote control 25, 50
[COMPUTER 2 SELECT] 77
Connecting 36
Connecting the power cord 41
[CONNECTION LOCK] 92
[CONTRAST] 60
[CONTROL DEVICE SETUP] 87
[Crestron Connected (TM)] 93

D
[DAYLIGHT VIEW] 63
<DEFAULT> button
Remote control 25, 57
Dimensions 146
[DISPLAY OPTION] 70
[DOT CLOCK] 67
<D.ZOOM +/-> buttons
Remote control 25, 52

E
<EASY SETTING/CANCEL> button
Projector body 27
[EASY SETTING] 83
[ECO MANAGEMENT] 79
[EMULATE] 80
<ENTER> button
Projector body 27
Remote control 25

F
FAQ 131
[FILTER COUNTER] 83
[FRAME LOCK] 68
<FREEZE> button
Remote control 25, 53
<FUNCTION> button
Remote control 25, 50
[FUNCTION BUTTON] 81

G
Glossary for network functions 142

H
<HDMI> button
Remote control 25, 50
[HDMI SIGNAL LEVEL] 71
[HIGH ALTITUDE MODE] 78

I
<ID ALL> button
Remote control 25, 54
<ID SET> button
Remote control 25, 54
[INITIALIZE] 96
[INITIALIZE ALL] 84
[INITIAL START UP] 78
<INPUT SELECT> button
Projector body 27
Installation mode 32
[IRIS] 62

K
[KEYSTONE] 65
<KEYSTONE> button
Remote control 25, 49

L
Lamp indicator 27, 125
[LAMP POWER] 79
[LANGUAGE] 69
List of compatible signals 140
[LIVE MODE CUT IN] 93

M
Main menu 57
Maintenance/replacement 126
[MEMORY VIEWER] 94, 95
<MEMORY VIEWER> button
Remote control 25, 50
<MENU> button
Projector body 27
Remote control 25, 56
[MENU LOCK] 86
[MENU LOCK PASSWORD] 86
Menu Navigation 56
<MIRRORING> button
Remote control 25, 51
[MULTI-LIVE] 94
<MUTE> button
Remote control 25, 54

N
[NAME CHANGE] 92
Network connections 96
[NETWORK CONTROL] 93
[NETWORK/USB] 88
[NOISE REDUCTION] 63

O
[ON-SCREEN DISPLAY] 70
Optional accessories 24
[OTHER FUNCTIONS] 75
[OVER SCAN] 67

P
<Panasonic APP> button
Remote control 25, 51
[PASSWORD] 85, 92
[PASSWORD CHANGE] 85, 93
[PICTURE] 60
[PICTURE MODE] 60
[P IN P] 75
<P IN P> button
Remote control 25, 53
PJLink protocol 133
[POSITION] 65
Power button
Projector body 27
Power indicator 27, 41
Powering Off the Projector 45
Powering On the Projector 42
Power on button
Remote control 25
Power standby button
Remote control 25
Precautions for use 18
Projecting 46
[PROJECTION METHOD] 78
[PROJECTOR ID] 78
[PROJECTOR SETUP] 77
[P-TIMER] 74
<P-TIMER> button
Remote control 25, 54

R
Read this first! 2
Remote control 25
<RETURN> button
Remote control 25, 57
[RGB/YPBPR] / [RGB/YCBCR] 64

S
[SCREEN SETTING] 72
[SECURITY] 85
Setting up 32
[SHARPNESS] 61
[SHIFT] 66
[SIGNAL SEARCH] 73
Specifications 144
[STARTUP LOGO] 72
[STATUS] 77, 95
Sub-menu 58
[SXGA MODE] 73

T
[TEST PATTERN] 83
[TEXT CHANGE] 86
[TEXT DISPLAY] 86
[TINT] 61
Troubleshooting 130, 131
[TV-SYSTEM] 64
Two window display combination list 139

V
<VIDEO/S-VIDEO> button
Remote control 25, 50

W
[WIDE MODE] 73
[WIRED LAN] 88
[WIRELESS DETAILED SETUP] 89
[WIRELESS LAN] 89

Information for Users on Collection and Disposal of Old Equipment and used Batteries

These symbols on the products, packaging, and/or accompanying documents mean that used electrical and electronic products and batteries should not be mixed with general household waste. For proper treatment, recovery and recycling of old products and used batteries, please take them to applicable collection points, in accordance with your national legislation and the Directives 2002/96/EC and 2006/66/EC.

By disposing of these products and batteries correctly, you will help to save valuable resources and prevent any potential negative effects on human health and the environment which could otherwise arise from inappropriate waste handling.

EU

For more information about collection and recycling of old products and batteries, please contact your local municipality, your waste disposal service or the point of sale where you purchased the items.

Penalties may be applicable for incorrect disposal of this waste, in accordance with national legislation.

EU

Cd

For business users in the European Union
If you wish to discard electrical and electronic equipment, please contact your dealer or supplier for further information.

Information on Disposal in other Countries outside the European Union
These symbols are only valid in the European Union. If you wish to discard these items, please contact your local authorities or dealer and ask for the correct method of disposal.

Note for the battery symbol (bottom two symbol examples):
This symbol might be used in combination with a chemical symbol. In this case it complies with the requirement set by the Directive for the chemical involved.

Product information (for Turkey only)

AEEE Yönetmeliğine Uygundur.
Eski Ekipman ve Bataryaların İşlenmesi.
Sadece geri dönüşüm sistemleri olan Avrupa Birliği ve ülkeleri için geçerlidir.

Ürünler, ambalaj ve/veya ekli belgeler üzerindeki bu semboller kullanılmış elektrik ve elektronik ürünlerin ve pillerin genel ev atığı ile karıştırılmaması gerektiğini ifade eder.
Eski ürünlerin ve pillerin toplanması ve geri kazanılması için bu atıkları lütfen yasayla belirlenmiş olan uygun toplama merkezlerine teslim ediniz.
Bu atıkların doğru işlenmesiyle, değerli kaynakların korunmasına ve insan sağlığı ve çevreye olası negatif etkilerinin engellenmesine yardımcı olabilirsiniz.
Atıkların toplanması ve geri dönüşümü için detaylı bilgi için lütfen bağlı olduğunuz yerel yönetimlerle iletişime geçiniz.
Atıkların atılmasıyla ilgili yanlış uygulamalar yasayla belirlenmiş olan cezalara sebebiyet verebilir.

Panasonic Corporation

Web Site : http://panasonic.net/avc/projector/
© Panasonic Corporation 2015

Panasonic Systems Communications Company of North America
5th Floor, Two Riverfront Plaza, Newark, NJ 07102-5490
TEL: (877) 803 - 8492

Panasonic Canada Inc.
5770 Ambler Drive, Mississauga, Ontario L4W 2T3
TEL: (905) 624 - 5010

M0315MZ0 -ST