DEKRA Certification, Inc.
405 Glenn Dr. Suite 12,
Sterling, VA 20164
United States of America

DEKRA

ACCREDITED
Test Lab
Cert 2764.01

FCC LISTED, REGISTRATION NUMBER: 2764.01

ISED LISTED REGISTRATION NUMBER: 23595-1

Test report No:
2427ERM.004A1

DFS Test report

USA FCC Part 15.407 (U-NIII)
CANADA RSS - 247
Unlicensed National Information Infrastructure Devices Operating in the 5250-5350 MHz and 5470 – 5725 MHz Bands incorporating Dynamic Frequency Selection

Identification of item tested	High Performance Display Controller (HPDC)
Trademark	Panasonic
Model and /or type reference	HPDC
Other identification of the product	FCC ID: ACJ932A-HPDC IC: 216A-HPDC HVIN: HPDC
Features	LVDS, Ethernet, A2B, BT, Wi-Fi, USB
Manufacturer	Panasonic Automotive Systems Company of America 776 Georgia Hwy 74 Peachtree city, GA 30269
Test method requested, standard	USA FCC Part 15.407 10-1-18 Edition: Unlicensed National Information Infrastructure Devices. General technical requirements. Canada RSS-247 Issue 2 (February 2017) 905462 D02 UNII DFS Compliance Procedures New rules V02. Compliance Measurement procedures for Unlicensed National Information Infrastructure (U-NII) Devices operating in the 5250 – 5350 MHz and 5470-5725 MHz bands incorporating Dynamic Frequency selection
Summary	IN COMPLIANCE
Approved by (name / position & signature)	Domingo Galvez EMC&RF Lab Manager Digitally signed by Domingo Galvez DN: cn=Domingo Galvez, o=DEKRA Certification Inc., ou=Regulatory Lab, email=dgalvez@dekra.com, c=US Date: 2019.06.13 17:06:21 -04'00'
Date of issue	06-11-2019
Report template No	FDT08_21

Index

Competences and guarantees 3
General conditions 3
Uncertainty 3
Data provided by the client 3
Usage of samples 4
Test sample description 5
Identification of the client 6
Testing period and place 6
Document history 6
Modifications to the reference test report 6
Environmental conditions 7
Remarks and comments 7
Testing verdicts 6
Summary 8
List of equipment used during the test 9
U-NII DFS RULE REQUIREMENTS 10
U-NII DFS TEST SETUP 13
Appendix A: DUT Information 15
Appendix B: Test results(5.25 – 5.35 GHz) 18
Appendix C: Test results(5.47 – 5.725 GHz) 18

Competences and guarantees

DEKRA Certification Inc. is a testing laboratory accredited by A2LA (The American Association for Laboratory Accreditation), to perform the tests indicated in the Certificate 2764.01

DEKRA Certification Inc. is a testing laboratory competent to carry out the tests described in this report.

In order to assure the traceability to other national and international laboratories, DEKRA Certification Inc. has a calibration and maintenance program for its measurement equipment.

DEKRA Certification Inc. guarantees the reliability of the data presented in this report, which is the result of the measurements and the tests performed to the item under test on the date and under the conditions stated on the report and, it is based on the knowledge and technical facilities available at DEKRA Certification at the time of performance of the test.

DEKRA Certification Inc. is liable to the client for the maintenance of the confidentiality of all information related to the item under test and the results of the test.

The results presented in this Test Report apply only to the particular item under test established in this document.

IMPORTANT: No parts of this report may be reproduced or quoted out of context, in any form or by any means, except in full, without the previous written permission of DEKRA Certification Inc.

General conditions

1. This report is only referred to the item that has undergone the test.
2. This report does not constitute or imply on its own an approval of the product by the Certification Bodies or competent Authorities.
3. This document is only valid if complete; no partial reproduction can be made without previous written permission of DEKRA Certification Inc.
4. This test report cannot be used partially or in full for publicity and/or promotional purposes without previous written permission of DEKRA Certification Inc. and the Accreditation Bodies.

Uncertainty

Uncertainty (factor k=2) was calculated according to the DEKRA Certification internal document PODT000.

Frequency (MHz)	U(k=2)	Units
0,009 - 30	2.69	dB
30-180	3.82	dB
180-1000	2.61	dB
1000-18000	2.92	dB
18000-40000	2.15	dB

Data provided by the client

LVDS, Ethernet, A2B, BT, Wi-Fi, USB

DEKRA declines any responsibility with respect to the information provided by the client and that may affect the validity of results.

Usage of samples

Samples undergoing test have been selected by: The client.

Sample S/01 is composed of the following elements:

Control Nº	Description	Model	Serial Nº	Date of reception
2427.09	HPDC Unit	GA200FRDMMM	100092	01/24/2019

Following accessories were used with Sample S/01 to keep S/01 in testing mode

Control Nº	Description	Model	Serial Nº	Date of reception
2427.05	Innolux Display for HPDC Unit	DD102ZA-01C	0139	01/11/2019
2427.02	Center Molex connector to Ethernet	-	2M20181210-1304	1/11/2019
2427.01	Power cable	-	-	1/11/2019
2427.03	Molex blue cable to Innolux Display	-	20181218-0958	1/11/2019
2427.04	Power cable for display	-	-	1/11/2019

1. Sample S/01 has undergone following test(s):

   All conducted DFS tests indicated in appendix A & B

Test sample description

Ports…… :	Port name and description	Cable				
		Specified length [m]	Attached during test	Shielded		
	Main Harness	2	☒	☐		
			☐	☐		
Supplementary information to the ports…… :	*Not provided data*					
Rated power supply .....:	Voltage and Frequency	Reference poles				
		L1	L2	L3	N	PE
	☐ AC:	☐	☐	☐	☐	☐
	☐ DC					
	☒ DC: 14.4 Vdc					
Rated Power .....:	*Not provided data*					
Clock frequencies .....:	*Not provided data*					
Other parameters.....:	*Not provided data*					
Software version .....:	R7					
Hardware version.....:	PV					
Dimensions in cm (L x W x D) ....:	*Data not provided*					
Mounting position.....:	☐ Table top equipment					
	☐ Wall/Ceiling mounted equipment					
	☐ Floor standing equipment					
	☐ Hand-held equipment					
	☒ Other: Vehicle Equipment					
Modules/parts .....:	Module/parts of test item	Type	Manufacturer			
	CX-MG29N04D	HPDC	Panasonic			
Accessories (not part of the test item) .....:	Description	Type	Manufacturer			
	Not provided data					
Documents as provided by the applicant.....:	Description	File name	Issue date			
	FDT30_14 Data Declaration Equipment Data					

Copy of marking plate:

Identification of the client

PANASONIC AUTOMOTIVE SYSTEMS COMPANY OF AMERICA
776 GEORGIA HWY 74 PEACHTREE CITY, GA 30269

Testing period and place

Test Location	DEKRA Certification Inc.
Date (start)	04-10-2019
Date (finish)	04-19-2019

Document history

Report number	Date	Description
2427ERM.004	04-22-2019	First release
2427ERM.004A1	06-11-2019	Second release

Modifications to the reference test report

It was introduced the following modifications in respect to the test report number 2427ERM.004 related with the same samples, in the next clauses and sub-clauses:

Clauses/ Sub-Clauses	Modification	Justification
Page 29,30/ Test Conditions/DFS Test Case	Inserted the RSS CHANNEL	Documentation error

This modification test report cancels and replaces the test report 2427ERM.004

Environmental conditions

In the control chamber, the following limits were not exceeded during the test:

Temperature	Min. = 15 ºC Max. = 35 ºC
Relative humidity	Min. = 30 % Max. = 75 %
Air pressure	Min. = 860 mbar Max. = 1060 mbar

In the semi-anechoic chamber, the following limits were not exceeded during the test.

Temperature	Min. = 15 ºC Max. = 35 ºC
Relative humidity	Min. = 30 % Max. = 75 %
Air pressure	Min. = 860 mbar Max. = 1060 mbar

In the chamber for conducted measurements, the following limits were not exceeded during the test:

Temperature	Min. = 15 ºC Max. = 35 ºC
Relative humidity	Min. = 30 % Max. = 60 %
Air pressure	Min. = 860 mbar Max. = 1060 mbar

Remarks and comments

The tests have been performed by the technical personnel: Divya Adusumilli

Testing verdicts

Not applicable :	N/A
Pass :	P
Fail :	F
Not measured :	N/M

Summary

FCC PART 15 PARAGRAPH / RSS-247 (WIFI 5GHz) 5.25 GHz -5.35 GHz Band						
Report Section	**15.407 Spec Clause**	**RSS Spec Clause**	**Test**	**Test Description**	**Verdict**	**Remark**
-	§ 15.407 (h) (2) & 7.8.1 (*)	RSS 247 6.3	DFS Detection Threshold	UNII Detection Bandwidth	N/A	Refer 1
-	§ 15.407 (h) (2)(ii) & 7.8.2 (*)	RSS 247 6.3	Performance Requirements Check	Initial Channel Availability Check Time (CAC)	N/A	Refer 1
				Radar Burst at the Beginning of the CAC	N/A	Refer 1
				Radar Burst at the End of the CAC	N/A	Refer 1
A.1	§ 15.407 (h) (2)(iii)(iv) & 7.8.3 (*)	RSS 247 6.3	In-Service Monitoring	Channel Move Time	P	Refer 2
				Channel Closing Transmission Time	P	Refer 2
				Non-Occupancy Period	P	Refer 2
-	7.8.4 (*)	RSS 247 6.3	Radar Detection	Statistical Performance Check	N/A	Refer 1

Supplementary information and remarks:

* The test set-up was made in accordance to the general provisions of FCC KDB 905462 D02 General UNII Test Procedures New Rules v02.

1) Not required for Client Devices without radar detection, according to the description provided by the applicant.
2) During normal operation
3) Prior to use a channel

FCC PART 15 PARAGRAPH / RSS-247 (WIFI 5GHz) 5.47 GHz -5.725 GHz Band						
Report Section	**15.407 Spec Clause**	**RSS Spec Clause**	**Test**	**Test Description**	**Verdict**	**Remark**
-	§ 15.407 (h) (2) & 7.8.1 (*)	RSS 247 6.3	DFS Detection Threshold	UNII Detection Bandwidth	N/A	Refer 1
-	§ 15.407 (h) (2)(ii) & 7.8.2 (*)	RSS 247 6.3	Performance Requirements Check	Initial Channel Availability Check Time (CAC)	N/A	Refer 1
				Radar Burst at the Beginning of the CAC	N/A	Refer 1
				Radar Burst at the End of the CAC	N/A	Refer 1
B.1	§ 15.407 (h) (2)(iii)(iv) & 7.8.3 (*)	RSS 247 6.3	In-Service Monitoring	Channel Move Time	P	Refer 2
				Channel Closing Transmission Time	P	Refer 2
				Non-Occupancy Period	P	Refer 2
-	7.8.4 (*)	RSS 247 6.3	Radar Detection	Statistical Performance Check	N/A	Refer 1

Supplementary information and remarks:

* The test set-up was made in accordance to the general provisions of FCC KDB 905462 D02 General UNII Test Procedures New Rules v02.

1) Not required for Client Devices without radar detection, according to the description provided by the applicant.
2) During normal operation
3) Prior to use a channel

List of equipment used during the test

Conducted Measurements

Test system Rohde & Schwarz TS 8997:

CONTROL NUMBER	DESCRIPTION	MANUFACTURER	MODEL	LAST CALIBRATION	NEXT CALIBRATION
1039	Signal Analyzer	ROHDE & SCHWARZ	FSV40	2017/03	2021/03
1040	EMI Test Receiver	ROHDE & SCHWARZ	OSP120 / OSPB157	2017/03	2021/03
1041	RF generator	ROHDE & SCHWARZ	SMB100A	2017/04	2021/04
1042	RF generator	ROHDE & SCHWARZ	SMBV100A	2018/01	2021/01

Description of Support Units:

CONTROL NUMBER	DESCRIPTION	MANUFACTURER	MODEL	FCC ID:	SERAIL NO
1295	Router	Linksys	WRT3200ACM	Q87-WRT3200ACM	1981160903165

Note: This device was functioned as a ☒ Master ☐ Slave device during the DFS test

U-NII DFS RULE REQUIREMENTS

WORKING MODES AND REQUIRED TEST ITEMS

The manufacturer shall state whether the EUT can operate as a Master and/or a Client. If the EUT can operate in more than one operating mode, then each operating mode shall be tested separately. See tables 1 and 2 for the applicability of DFS requirements for each of the operational modes.

Table 1: Applicability of DFS Requirements Prior to Use of a Channel

Requirement	Operational Mode		
	Master	Client Without Radar Detection	Client With Radar Detection
Non-Occupancy Period	Yes	Not required	Yes
DFS Detection Threshold	Yes	Not required	Yes
Channel Availability Check Time	Yes	Not required	Not required
U-NII Detection Bandwidth	Yes	Not required	Yes

Table 2: Applicability of DFS requirements during normal operation

Requirement	Operational Mode	
	Master Device or Client with Radar Detection	Client Without Radar Detection
DFS Detection Threshold	Yes	Not required
Channel Closing Transmission Time	Yes	Yes
Channel Move Time	Yes	Yes
U-NII Detection Bandwidth	Yes	Not required

Additional requirements for devices with multiple bandwidth modes	Master Device or Client with Radar Detection	Client Without Radar Detection
U-NII Detection Bandwidth and Statistical Performance Check	All BW modes must be tested	Not required
Channel Move Time and Channel Closing Transmission Time	Test using widest BW mode available	Test using the widest BW mode available for the link
All other tests	Any single BW mode	Not required
Note: Frequencies selected for statistical performance check (Section 7.8.4) should include several frequencies within the radar detection bandwidth and frequencies near the edge of the radar detection bandwidth. For 802.11 devices it is suggested to select frequencies in each of the bonded 20 MHz channels and the channel center frequency.		

TEST LIMITS AND RADAR SIGNAL PARAMETERS

- DFS DETECTION THRESHOLDS FOR MASTER DEVICES AND CLIENT DEVICES WITH RADAR DETECTION

Maximum Transmit Power EIRP	Value (see note)
≥ 200 mW	-64 dBm
< 200 mW and power spectral density < 10 dBm/MHz	-62 dBm
< 200 mW and That do not meet the power spectral density < 10 dBm/MHz	-64 dBm
Note 1: This is the level at the input of the receiver assuming a 0 dBi receive antenna. Note 2: Throughout these test procedures an additional 1 dB has been added to the amplitude of the test transmission waveforms to account for variations in measurement equipment. This will ensure that the test signal is at or above the detection threshold level to trigger a DFS response. Note3: EIRP is based on the highest antenna gain. For MIMO devices refer to KDB Publication 662911 D01.	

- DFS RESPONSE REQUIREMENT VALUES

Parameter	Value
Non-occupancy period	minimum 30 minutes
Channel Availability Check Time	60 seconds
Channel Move Time	10 seconds See Note 1.
Channel Closing Transmission Time	200 milliseconds + an aggregate of 60 milliseconds over remaining 10 second period. See Notes 1 and 2.
U-NII Detection Bandwidth	Minimum 100% of the U-NII 99% transmission power bandwidth. See Note 3.
Note 1: Channel Move Time and the Channel Closing Transmission Time should be performed with Radar Type 0. The measurement timing begins at the end of the Radar Type 0 burst. Note 2: The Channel Closing Transmission Time is comprised of 200 milliseconds starting at the beginning of the Channel Move Time plus any additional intermittent control signals required to facilitate a Channel move (an aggregate of 60 milliseconds) during the remainder of the 10 second period. The aggregate duration of control signals will not count quiet periods in between transmissions. Note 3: During the U-NII Detection Bandwidth detection test, radar type 0 should be used. For each frequency step the minimum percentage of detection is 90 percent. Measurements are performed with no data traffic.	

- RADAR TEST WAVEFORMS
  - Short Pulse Radar Test Waveforms:

Radar Type	Pulse Width (µsec)	PRI (µsec)	Number of Pulses	Minimum Percentage of Successful Detection	Minimum Number of Trials
0	1	1428	18	See Note 1	See Note 1
1	1	Test A: 15 unique PRI values randomly selected from the list of 23 PRI values in Table 5a	Roundup $\left\{\left(\frac{1}{360}\right)\cdot\left(\frac{19\cdot 10^6}{PRI_{\mu sec}}\right)\right\}$	60%	30
		Test B: 15 unique PRI values randomly selected within the range of 518-3066 µsec, with a minimum increment of 1 µsec, excluding PRI values selected in Test A			
2	1-5	150-230	23-29	60%	30
3	6-10	200-500	16-18	60%	30
4	11-20	200-500	12-16	60%	30
Aggregate (Radar Types 1-4)				80%	120
Note 1: Short Pulse Radar Type 0 should be used for the detection bandwidth test, channel move time, and channel closing time tests.					

A minimum of 30 unique waveforms for each of the Short Pulse Radar Types 2 through 4.

  - Pulse Repetition Intervals Values for Test A

Pulse Repetition Frequency Number	Pulse Repetition Frequency (Pulses Per Second)	Pulse Repetition Interval (Microseconds)
1	1930.5	518
2	1858.7	538
3	1792.1	558
4	1730.1	578
5	1672.2	598
6	1618.1	618
7	1567.4	638
8	1519.8	658
9	1474.9	678
10	1432.7	698
11	1392.8	718
12	1355	738
13	1319.3	758
14	1285.3	778
15	1253.1	798
16	1222.5	818
17	1193.3	838
18	1165.6	858
19	1139	878
20	1113.6	898
21	1089.3	918
22	1066.1	938
23	326.2	3066

- Long Pulse Radar Test Waveform

Radar Type	Pulse Width (µsec)	Chirp Width (MHz)	PRI (µsec)	Number of Pulses per Burst	Number of Bursts	Minimum Percentage of Successful Detection	Minimum Number of Trails
5	50-100	5-20	1000-2000	1-3	8-20	80%	30

The parameters for this waveform are randomly chosen. Thirty unique waveforms are required for the Long Pulse Radar Type Waveforms.

- Frequency Hopping Radar Test Waveform

Radar Type	Pulse Width (µsec)	Chirp Width (MHz)	Pulses per Hop	Hopping Rate (kHz)	Hopping Sequence Length (msec)	Minimum Percentage of Successful Detection	Minimum Number of Trails
6	1	333	9	0.333	300	70%	30

For the Frequency Hopping Radar Type, the same Burst parameters are used for each waveform. The hopping sequence is different for each waveform and a 100-length segment is selected from the hopping sequence defined.

The first frequency in a hopping sequence is selected randomly from the group of 475 integer frequencies from 5250 – 5724 MHz. Next, the frequency that was just chosen is removed from the group and a frequency is randomly selected from the remaining 474 frequencies in the group. This process continues until all 475 frequencies are chosen for the set.

U-NII DFS Test Setup

- <u>Setup Configuration of EUT (Conducted)</u>

Setup for Master with injection at the Master

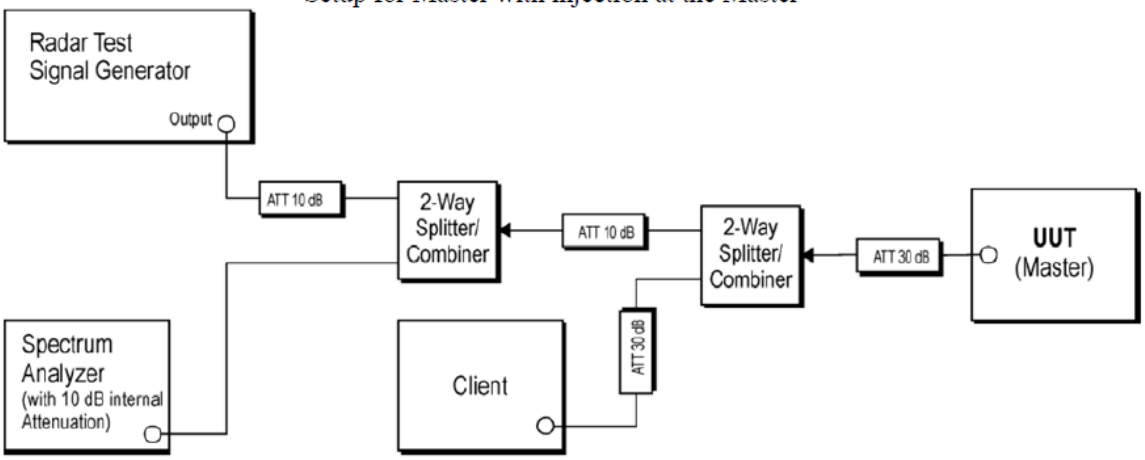

Setup for Client with injection at the Master

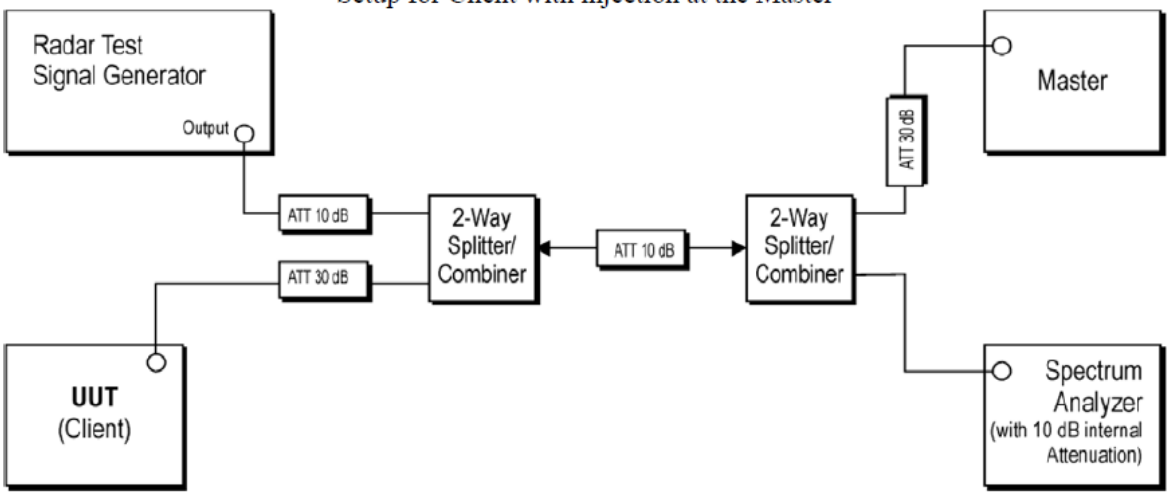

Setup for Client with injection at the Client

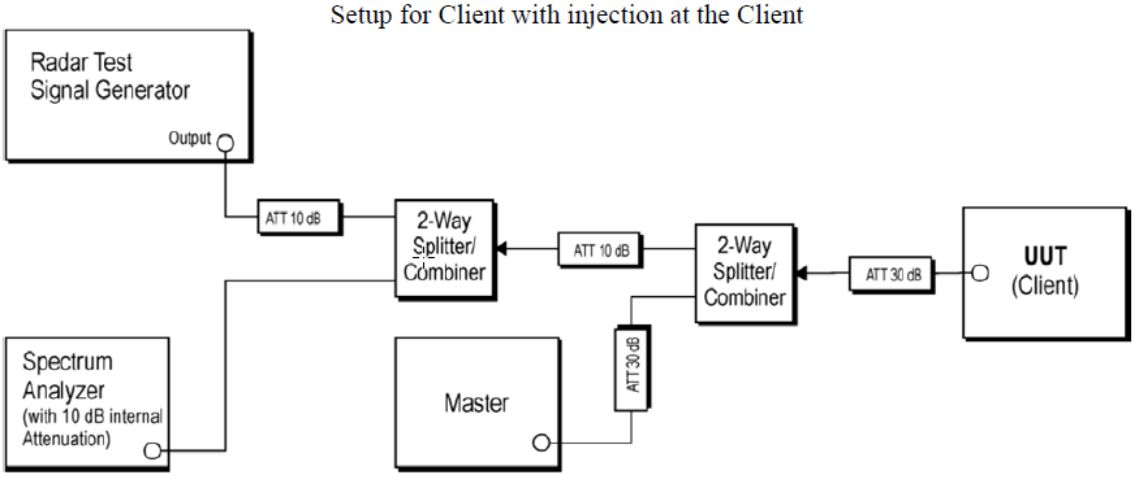

- Setup Configuration of TS8997 (Conducted)

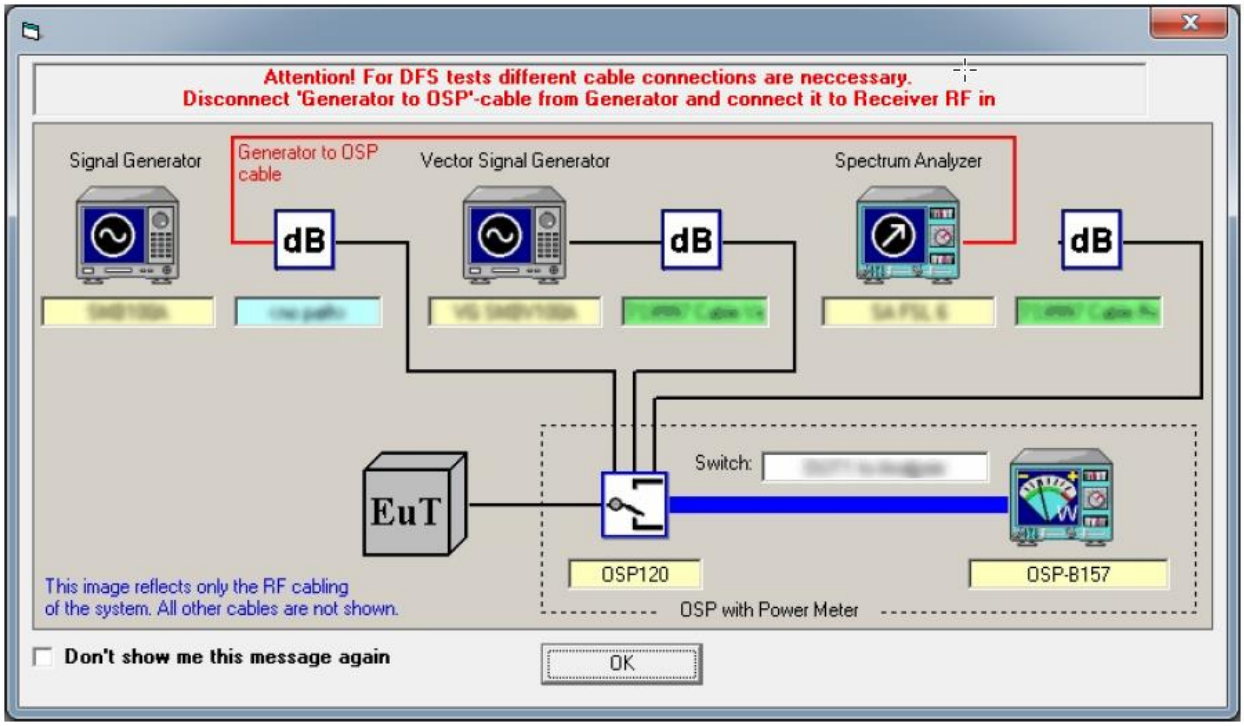

- Channel Loading

System testing will be performed with channel-loading using means appropriate to the data types that are used by the unlicensed device. The following requirements apply:

a)	The data file must be of a type that is typical for the device (i.e., MPEG-2, MPEG-4, WAV, MP3, MP4, AVI, etc.) and must generally be transmitting in a streaming mode.	☐
b)	Software to ping the client is permitted to simulate data transfer but must have random ping intervals.	☒
c)	Timing plots are required with calculations demonstrating a minimum channel loading of approximately 17% or greater.	☒
d)	Unicast or Multicast protocols are preferable but other protocols may be used. The appropriate protocol used must be described in the test procedures.	☐

Appendix A: DUT Description

DUT Description

The following information is provided by the client

Information	Description
Equipment type	WIFI 5GHz/2.4 GHz + BT BR/EDR
DFS Operating Mode	Slave without Radar Detection
TPC Function	Not Supported[1]
Antenna Supported	Equipment with only one antenna
- Operating Frequency Range	5250 - 5350 MHz / 5470 -5725 MHz
- Nominal Channel Bandwidth	20/ 40/ 80 MHz
Antenna type	Integral antenna (single)
Antenna gain	-2.5 dBi
Supply Voltage	14.4 Vdc
Max EIRP:	Range: 5250-5350 MHz 802.11a : -0.7 dBm 802.11n20: -1.0 dBm 802.11n40: 1.7 dBm 802.11ac20: 1.7 dBm 802.11ac40: 1.6 dBm 802.11ac80: 1.7dBm Range: 5470-5725 MHz 802.11a20 : -2.1 dBm 802.11n20: 1.5 dBm 802.11n40: 1.5 dBm 802.11ac20: 1.5 dBm 802.11ac40: 1.5 dBm 802.11ac80: 1.3 dBm
Modulation:	OFDM (QPSK, BPSK,16QAM,64QAM,256QAM)
Communication Mode:	IP Based (Load Based)
Transmit Data Rate:	IEEE 802.11a: 6, 9, 12, 18, 24, 36, 48, 54 Mbps IEEE 802.11n HT20: 7.2, 14.4, 21.7, 28.9, 43.3, 57.8, 65, 72.2 Mbps IEEE 802.11n HT40: 15, 30, 45, 60, 90, 120, 135, 150 Mbps IEEE 802.11ac VHT20: 86.7 Mbps IEEE 802.11ac VHT40: 180, 200 Mbps IEEE 802.11ac VHT80: 390, 433.3 Mbps

1. TPC not required if Max EIRP < 500mW (27 dBm)

Appendix B: Test results
5.25 GHz – 5.35 GHz Band

Appendix B Content

DESCRIPTION OF TEST CONDITIONS 20
TEST B.1: DFS: IN-SERVICE MONITORING 21

DESCRIPTION OF TEST CONDITIONS

TEST CONDITIONS	DESCRIPTION
TC#01[(1)] **(ac mode)**	Power supply (V): $V_{nominal}$ = 14.4 Vdc Test Frequencies for Conducted: **(80 MHz)** Middle channel: 5300 MHz

TEST B.1: DFS: IN-SERVICE MONITORING

LIMITS:	Product standard:	Part 15 Subpart C §15.407, RSS-247 and KDB: 905462
	Test standard:	Part 15 Subpart C §15.407 (h), RSS-247 6.3 and KDB: 905462 D02

LIMITS:

200 ms + an aggregate of 60 ms over remaining 10s period. See Notes 1 and 2.

Note 1: Channel Move Time and the Channel Transmission Time should be performed with Radar Type 0. The measurement timing begins at the end of the Radar Type 0 burst.

Note 2: The Channel closing Transmission time is comprised of 200 ms starting at the beginning of the channel move time plus any additional intermittent control signals required to facilitate a channel move (an aggregate of 60ms) during the remainder of the 10s period. The aggregate duration of control signals will not count quiet periods in between transmissions.

TEST SETUP:

CLIENT WITHOUT RADAR DETECTION MODE

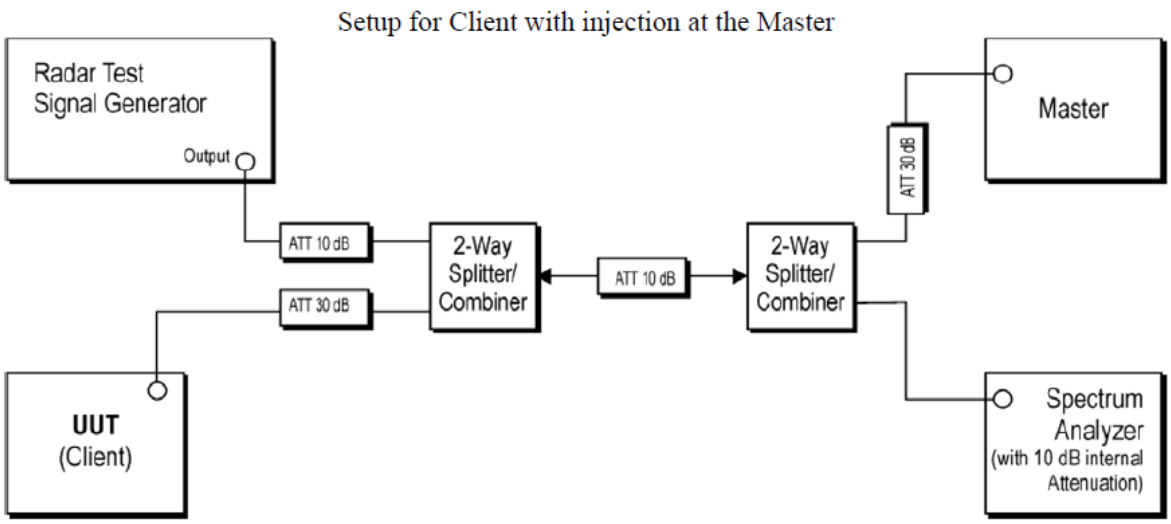

TESTED SAMPLES:	S/01
TESTED CONDITIONS MODES:	TC#01 **(ac mode 80 MHz)**
TEST RESULTS:	PASS

Measurement Summary

DUT Frequency (MHz)	Radar Type No.	Type of Measurement value	Overall Result	Overall Comment
5300.000000	0	First of all Transmitt Test	PASS	DUT is transmitting
5300.000000	0	Channel Move Time	PASS	
5300.000000	0	Channel Closing Transmission Time	PASS	
5300.000000	0	Non-occupancy period	PASS	

Channel Move Time Detailed Results

DUT Frequency (MHz)	Radar Type No.	CMT Tx Time (s)	CMT Limit (s)	CMT Result	CMT Comment
5300.000000	0	2.052	10.000	PASS	Tx Time value is last trailing edge found within sweep. See Note 1.

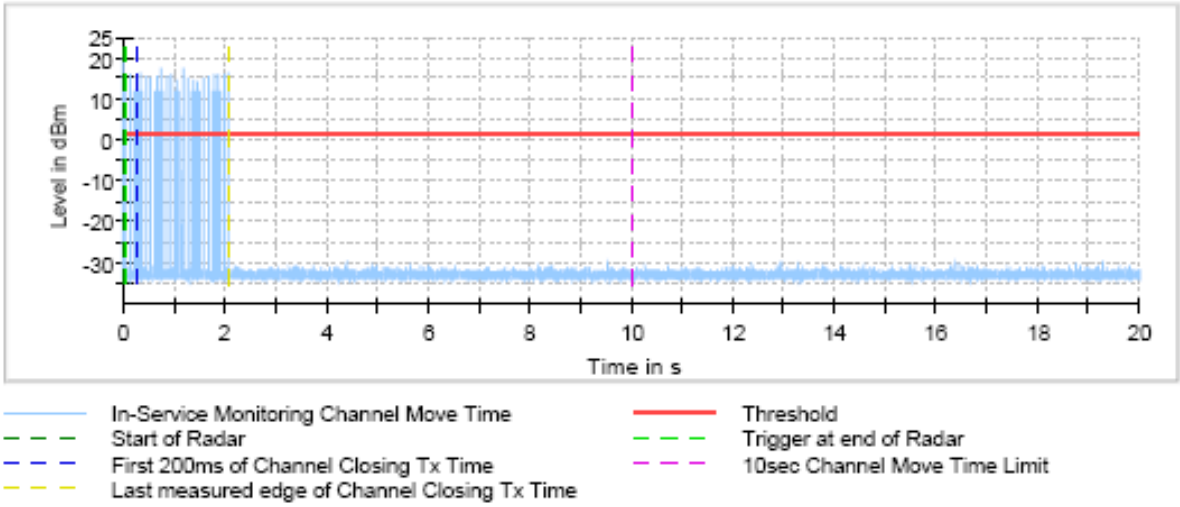

TEST RESULTS (Cont.):	

Channel Closing Transmission Time Detailed Results

DUTFrequency (MHz)	RadarType No.	CCTT Type of Value	CCTT No. of Pulses found	CCTT Tx Time (ms)
5300.000000	0	first 200 ms	31	1.476
5300.000000	0	remaining 10.0 second(s) period	261	13.168

(continuation of the "Channel Closing Transmission Time Detailed Results" table from column 5 ...)

DUT Frequency (MHz)	CCTT Tx Time Limit (ms)	CCTT Result	CCTT Comment
5300.000000	200.000	PASS	See Note 1.
5300.000000	60.000	PASS	See Note 1.

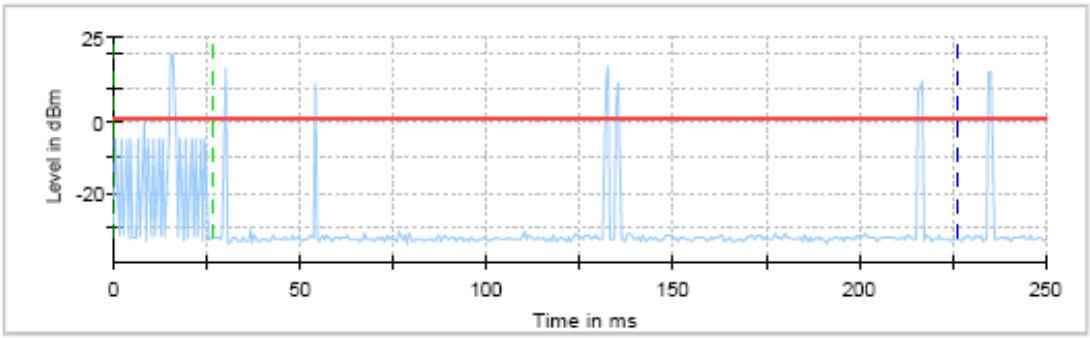

In-Service Monitoring Channel Move Time first 200ms
Threshold
Start of Radar
Trigger at end of Radar
First 200ms of Channel Closing Tx Time

Additional Information

Note	Description
Note 1:	Because of the radar pulse event at the beginning, the investigation of the trace begins with an offset of 26.7 ms conforming to the end of the Radar burst.
Note 2:	Channel move time (CMT) / channel closing transmission time (CCTT) measurement was made with hi resolution video sweep using OSP DAQ channel
Note 3:	Because of the substantially higher sampling rate of the video signal the results for CCTT and CMT are more accurate than in the graphics visible. Reached timing accuracy of the video trace: approx 4 µs
Note 4:	The Non-Occupancy Period trace starts at the end of the Channel move time trace (20.000 secs.) Labeling of the x-axis (time) is relative to its beginning (0 secs.)

TEST RESULTS (Cont.):	

Non-occupancy period Detailed Results

DUT Frequency (MHz)	Radar Type No.	NOP No. of Pulses found	NOP No. of Pulses Limit	NOP Tx Time (s)	NOP Tx Time Limit (s)	NOP Result
5300.000000	0	0	0	0.000	0.000	PASS

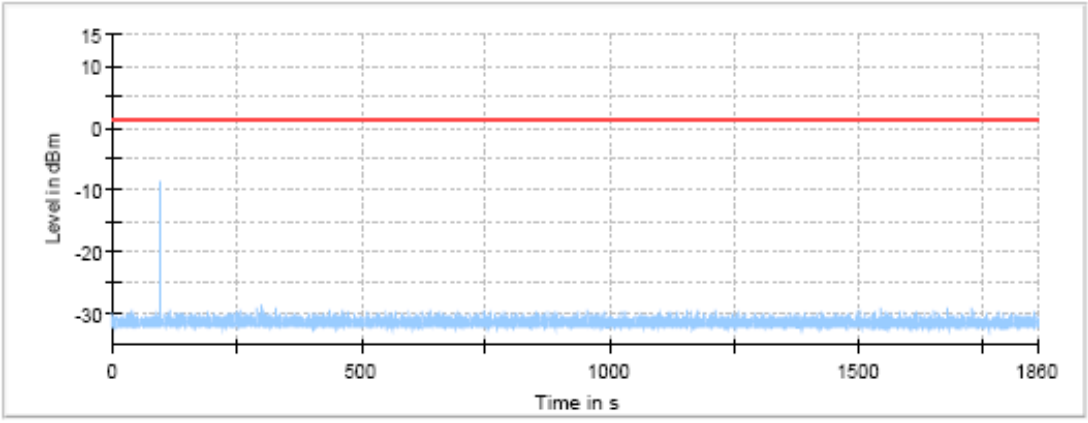

In-Service Monitoring Non-occupancy period Threshold

Transmitting Test Detailed Results

DUT Frequency (MHz)	Tx-Test DutyCycle (%)	Tx-Test DutyCycle Limit	Tx-Test No. of Pulses found	Tx-Test Result	Tx-Test Comment
5300.000000	45.353	>=17 %	87	PASS	

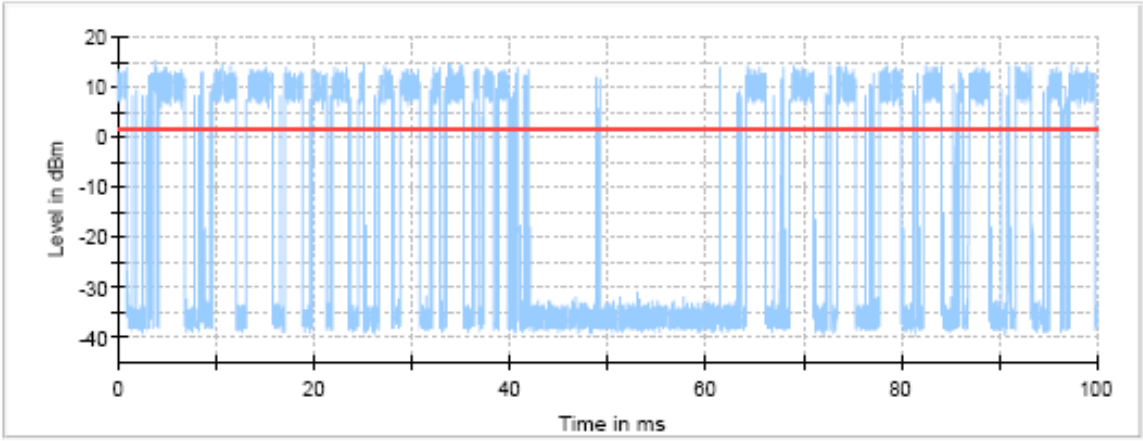

In-Service Monitoring Transmitt Test Sweep Threshold

TEST RESULTS (Cont.):	

DUT Checkup

Setting	Instrument Value
Center Frequency	5.30000 GHz
Span	ZeroSpan
RBW	3.000 MHz
VBW	3.000 MHz
SweepPoints	30001
Sweeptime	100.000 ms
Reference Level	5.000 dBm
Attenuation	0.000 dB
Detector	MaxPeak
SweepCount	1
Filter	3 dB
Trace Mode	Clear Write
Sweeptype	Sweep
Preamp	off

Channel Move Time; Channel Closing Transmission Time

Setting	Instrument Value
Center Frequency	5.30000 GHz
Span	ZeroSpan
RBW	3.000 MHz
VBW	3.000 MHz
SweepPoints	30001
Sweeptime	20.000 s
Reference Level	5.000 dBm
Attenuation	0.000 dB
Detector	MaxPeak
SweepCount	1
Filter	3 dB
Trace Mode	Clear Write
Sweeptype	Sweep
Preamp	off
Trigger	External
Trigger Offset	0.000 ms

Non-occupancy period

Setting	Instrument Value
Center Frequency	5.30000 GHz
Span	ZeroSpan
RBW	3.000 MHz
VBW	3.000 MHz
SweepPoints	30001
Sweeptime	1.860 ms
Reference Level	5.000 dBm
Attenuation	0.000 dB
Detector	MaxPeak
SweepCount	1
Filter	3 dB
Trace Mode	Clear Write
Sweeptype	Sweep
Preamp	off

TEST RESULTS (Cont.):	

Radar level verification

Description	Value	Unit
Configured DUT EIRP:	3.16	mW
Configured DUT PSD:	10.00	dBm/MHz
Requirement of the Detection threshold value for this given values acc. to FCC clause 5.2 / Table 3	-64	dBm
Vector Generator level setting	-26.52	dBm
Configured overall pathlost from Vector Generator RF out to DUT connector of 'DUT to OSP'-cable	36.48	dB
Given additional level added to the amplitude of the waveform to account for variations in measurement equipment acc. to FCC clause 5.2 / Table 3 / Note 2	1.00	dB
This results in the following radar signal level at the DUT	-63.00	dBm

Appendix C: Test results
5.47 GHz – 5.725 GHz Band

Appendix C Content

DESCRIPTION OF TEST CONDITIONS 29
TEST C.1: DFS: IN-SERVICE MONITORING 30

DESCRIPTION OF TEST CONDITIONS

TEST CONDITIONS	DESCRIPTION
TC#01[(1)] **(ac mode)**	Power supply (V): $V_{nominal}$ = 14.4 Vdc Test Frequencies FCC for Conducted: **(80 MHz)** Middle channel: 5580 MHz Test Frequencies RSS for Conducted: **(80 MHz)** Middle channel: 5530 MHz

TEST C.1: DFS: IN-SERVICE MONITORING

LIMITS:	Product standard:	Part 15 Subpart C §15.407, RSS-247 and KDB: 905462
	Test standard:	Part 15 Subpart C §15.407 (h), RSS-247 6.3 and KDB: 905462 D02

LIMITS:

200 ms + an aggregate of 60 ms over remaining 10s period. See Notes 1 and 2.

Note 1: Channel Move Time and the Channel Transmission Time should be performed with Radar Type 0. The measurement timing begins at the end of the Radar Type 0 burst.

Note 2: The Channel closing Transmission time is comprised of 200 ms starting at the beginning of the channel move time plus any additional intermittent control signals required to facilitate a channel move (an aggregate of 60ms) during the remainder of the 10s period. The aggregate duration of control signals will not count quiet periods in between transmissions.

TEST SETUP:

CLIENT WITHOUT RADAR DETECTION MODE

Setup for Client with injection at the Master

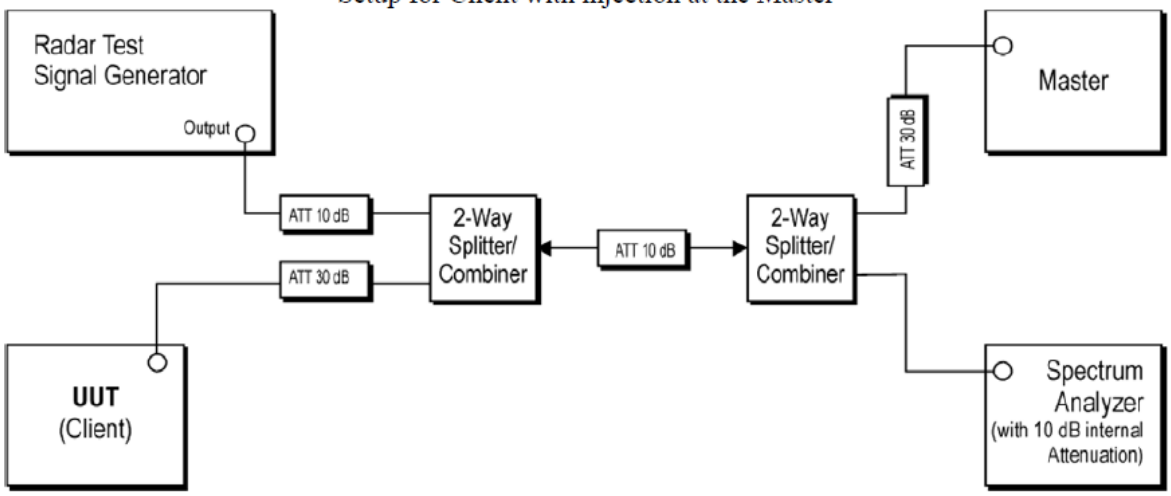

TESTED SAMPLES:	S/01
TESTED CONDITIONS MODES:	TC#01 **(ac mode 80 MHz)**
TEST RESULTS:	PASS

Measurement Summary

DUT Frequency (MHz)	Radar Type No.	Type of Measurement value	Overall Result	Overall Comment
5580.000000	0	First of all Transmitt Test	PASS	DUT is transmitting
5580.000000	0	Channel Move Time	PASS	
5580.000000	0	Channel Closing Transmission Time	PASS	
5580.000000	0	Non-occupancy period	PASS	

Channel Move Time Detailed Results

DUT Frequency (MHz)	Radar Type No.	CMT Tx Time (s)	CMT Limit (s)	CMT Result	CMT Comment
5580.000000	0	0.000	10.000	PASS	Tx Time value is last trailing edge found within sweep. See Note 1.

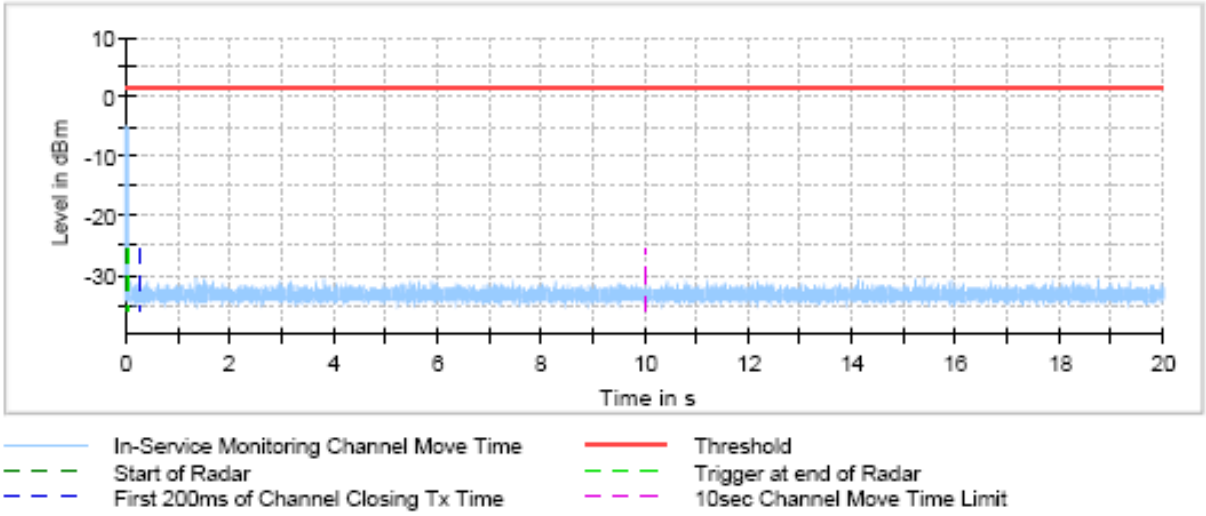

TEST RESULTS (Cont.):	

Channel Closing Transmission Time Detailed Results

DUTFrequency (MHz)	RadarType No.	CCTT Type of Value	CCTT No. of Pulses found	CCTT Tx Time (ms)
550.000000	0	first 200 ms	0	0.000
5580.000000	0	remaining 10.0 second(s) period	0	0.000

(continuation of the "Channel Closing Transmission Time Detailed Results" table from column 5 ...)

DUT Frequency (MHz)	CCTT Tx Time Limit (ms)	CCTT Result	CCTT Comment
5580.000000	200.000	PASS	See Note 1.
5580.000000	60.000	PASS	See Note 1.

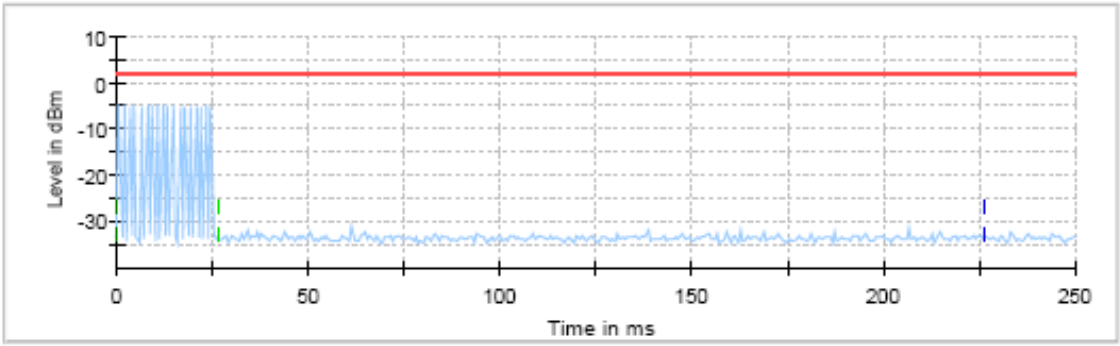

In-Service Monitoring Channel Move Time first 200ms
Threshold
Start of Radar
Trigger at end of Radar
First 200ms of Channel Closing Tx Time

Additional Information

Note	Description
Note 1:	Because of the radar pulse event at the beginning, the investigation of the trace begins with an offset of 26.7 ms conforming to the end of the Radar burst.
Note 2:	Channel move time (CMT) / channel closing transmission time (CCTT) measurement was made with hi resolution video sweep using OSP DAQ channel
Note 3:	Because of the substantially higher sampling rate of the video signal the results for CCTT and CMT are more accurate than in the graphics visible. Reached timing accuracy of the video trace: approx 4 µs
Note 4:	The Non-Occupancy Period trace starts at the end of the Channel move time trace (20.000 secs.) Labeling of the x-axis (time) is relative to its beginning (0 secs.)

TEST RESULTS (Cont.):	

Non-occupancy period Detailed Results

DUT Frequency (MHz)	Radar Type No.	NOP No. of Pulses found	NOP No. of Pulses Limit	NOP Tx Time (s)	NOP Tx Time Limit (s)	NOP Result
5580.000000	0	0	0	0.000	0.000	PASS

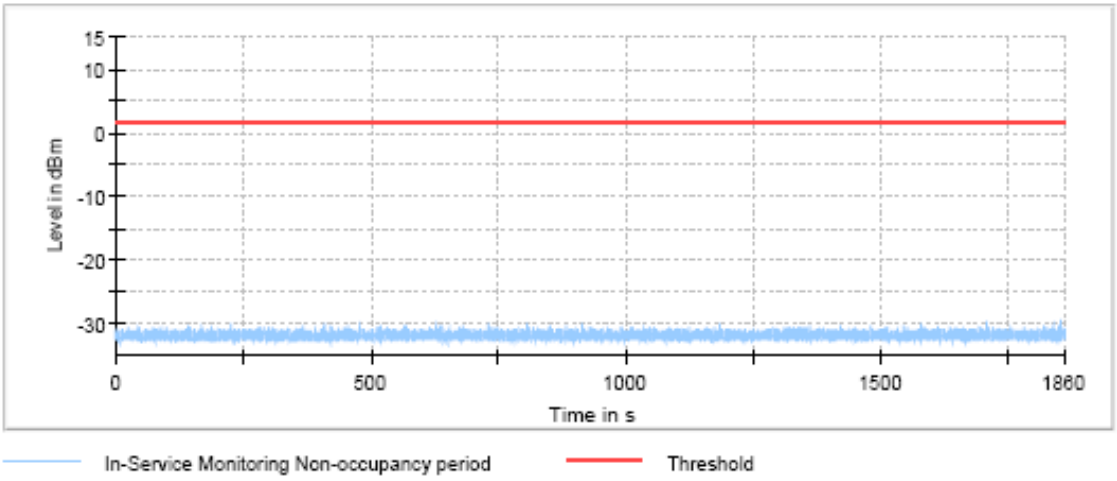

Transmitting Test Detailed Results

DUT Frequency (MHz)	Tx-Test DutyCycle (%)	Tx-Test DutyCycle Limit	Tx-Test No. of Pulses found	Tx-Test Result	Tx-Test Comment
5580.000000	51.347	>=17 %	120	PASS	

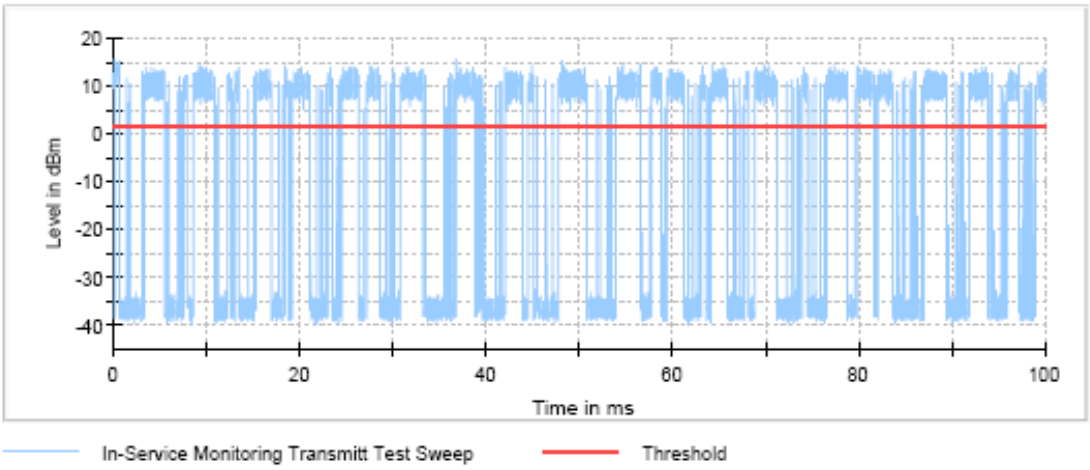

TEST RESULTS (Cont.):	

DUT Checkup

Setting	Instrument Value
Center Frequency	5.58000 GHz
Span	ZeroSpan
RBW	3.000 MHz
VBW	3.000 MHz
SweepPoints	30001
Sweeptime	100.000 ms
Reference Level	5.000 dBm
Attenuation	0.000 dB
Detector	MaxPeak
SweepCount	1
Filter	3 dB
Trace Mode	Clear Write
Sweeptype	Sweep
Preamp	off

Channel Move Time; Channel Closing Transmission Time

Setting	Instrument Value
Center Frequency	5.58000 GHz
Span	ZeroSpan
RBW	3.000 MHz
VBW	3.000 MHz
SweepPoints	30001
Sweeptime	20.000 s
Reference Level	5.000 dBm
Attenuation	0.000 dB
Detector	MaxPeak
SweepCount	1
Filter	3 dB
Trace Mode	Clear Write
Sweeptype	Sweep
Preamp	off
Trigger	External
Trigger Offset	0.000 ms

Non-occupancy period

Setting	Instrument Value
Center Frequency	5.58000 GHz
Span	ZeroSpan
RBW	3.000 MHz
VBW	3.000 MHz
SweepPoints	30001
Sweeptime	1.860 ms
Reference Level	5.000 dBm
Attenuation	0.000 dB
Detector	MaxPeak
SweepCount	1
Filter	3 dB
Trace Mode	Clear Write
Sweeptype	Sweep
Preamp	off

TEST RESULTS (Cont.):	

Radar level verification

Description	Value	Unit
Configured DUT EIRP:	3.16	mW
Configured DUT PSD:	10.00	dBm/MHz
Requirement of the Detection threshold value for this given values acc. to FCC clause 5.2 / Table 3	-64	dBm
Vector Generator level setting	-26.86	dBm
Configured overall pathlost from Vector Generator RF out to DUT connector of 'DUT to OSP'-cable	36.14	dB
Given additional level added to the amplitude of the waveform to account for variations in measurement equipment acc. to FCC clause 5.2 / Table 3 / Note 2	1.00	dB
This results in the following radar signal level at the DUT	-63.00	dBm

TEST RESULTS (Cont.)	RSS CHANNEL

Measurement Summary

DUT Frequency (MHz)	Radar Type No.	Type of Measurement value	Overall Result	Overall Comment
5530.000000	0	First of all Transmitt Test	PASS	DUT is transmitting
5530.000000	0	Channel Move Time	PASS	
5530.000000	0	Channel Closing Transmission Time	PASS	
5530.000000	0	Non-occupancy period	PASS	

Channel Move Time Detailed Results

DUT Frequency (MHz)	Radar Type No.	CMT Tx Time (s)	CMT Limit (s)	CMT Result	CMT Comment
5530.000000	0	0.000	10.000	PASS	Tx Time value is last trailing edge found within sweep. See Note 1.

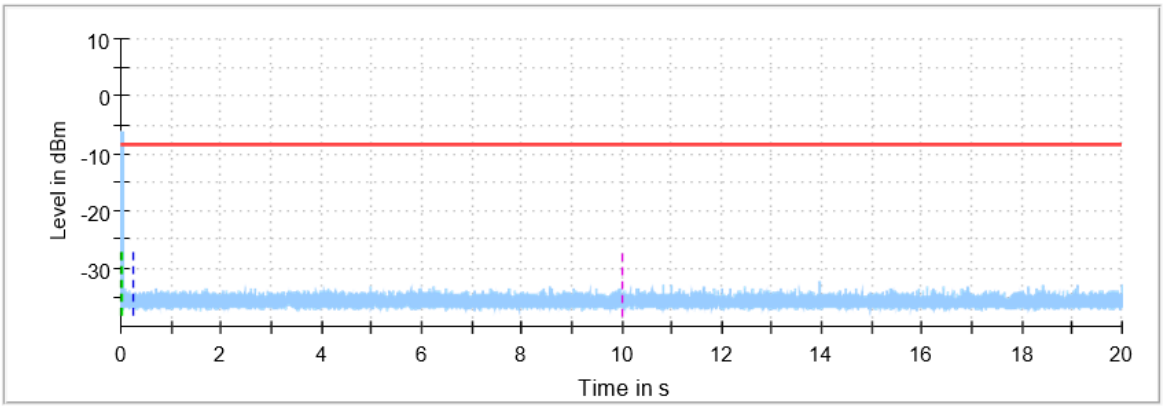

In-Service Monitoring Channel Move Time
Start of Radar
First 200ms of Channel Closing Tx Time
Threshold
Trigger at end of Radar
10sec Channel Move Time Limit

TEST RESULTS (Cont.):	

Channel Closing Transmission Time Detailed Results

DUTFrequency (MHz)	RadarType No.	CCTT Type of Value	CCTT No. of Pulses found	CCTT Tx Time (ms)

5530.000000	0	first 200 ms	0	0.000
5530.000000	0	remaining 10.0 second(s) period	0	0.000

(continuation of the "Channel Closing Transmission Time Detailed Results" table from column 5 ...)

DUT Frequency (MHz)	CCTT Tx Time Limit (ms)	CCTT Result	CCTT Comment
5530.000000	200.000	PASS	See Note 1.
5530.000000	60.000	PASS	See Note 1.

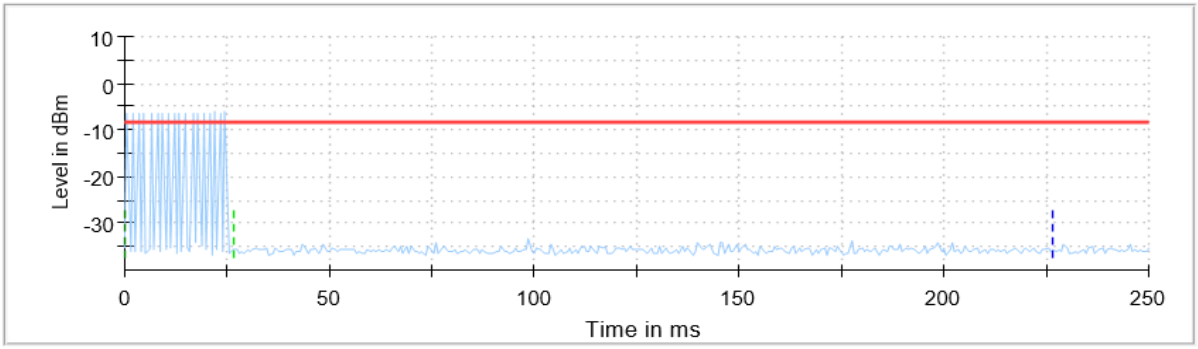

In-Service Monitoring Channel Move Time first 200ms
Threshold
Start of Radar
Trigger at end of Radar
First 200ms of Channel Closing Tx Time

Additional Information

Note	Description
Note 1:	Because of the radar pulse event at the beginning, the investigation of the trace begins with an offset of 26.7 ms conforming to the end of the Radar burst.
Note 2:	Channel move time (CMT) / channel closing transmission time (CCTT) measurement was made with hi resolution video sweep using OSP DAQ channel
Note 3:	Because of the substantially higher sampling rate of the video signal the results for CCTT and CMT are more accurate than in the graphics visible. Reached timing accuracy of the video trace: approx 4 µs
Note 4:	The Non-Occupancy Period trace starts at the end of the Channel move time trace (20.000 secs.) Labeling of the x-axis (time) is relative to its beginning (0 secs.)

TEST RESULTS (Cont.):	

Non-occupancy period Detailed Results

DUT Frequency (MHz)	Radar Type No.	NOP No. of Pulses found	NOP No. of Pulses Limit	NOP Tx Time (s)	NOP Tx Time Limit (s)	NOP Result
5530.000000	0	0	0	0.000	0.000	PASS

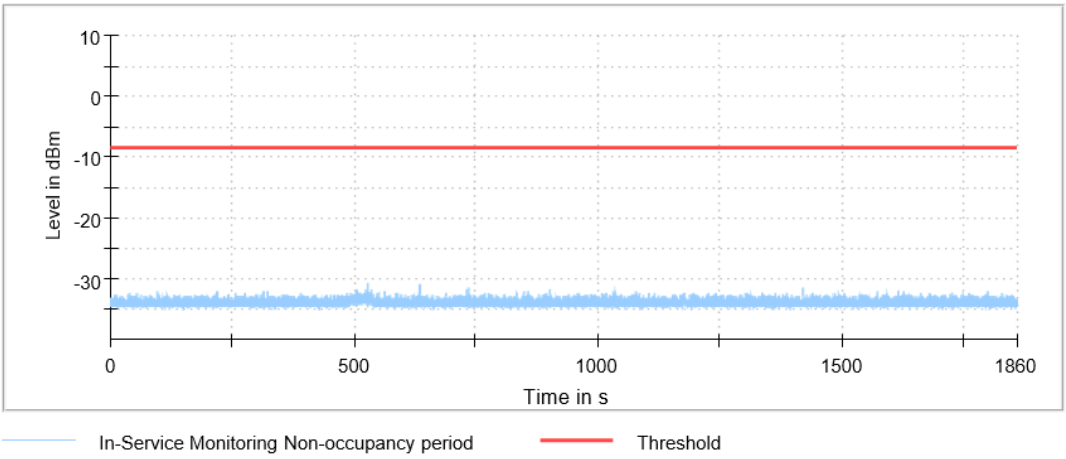

Transmitting Test Detailed Results

DUT Frequency (MHz)	Tx-Test DutyCycle (%)	Tx-Test DutyCycle Limit	Tx-Test No. of Pulses found	Tx-Test Result	Tx-Test Comment
5530.000000	68.533	>=17 %	94	PASS	

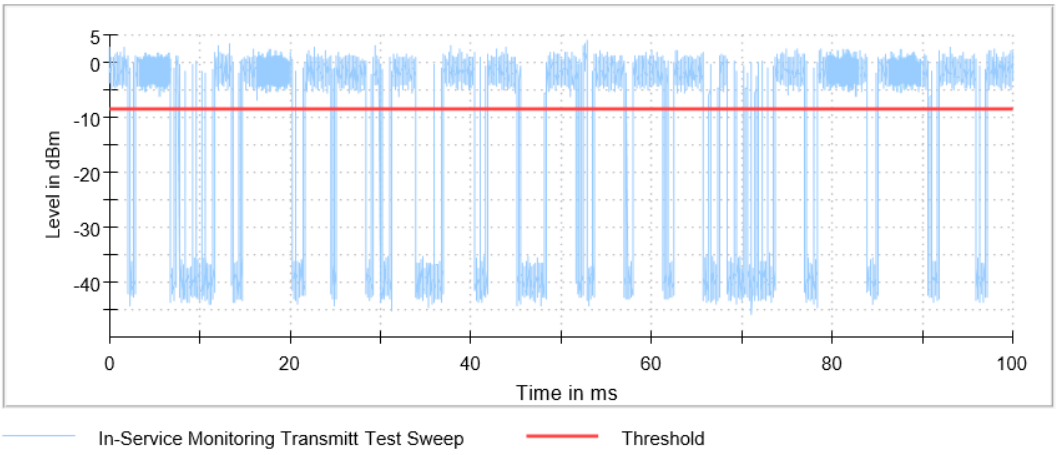

TEST RESULTS (Cont.):	

DUT Checkup

Setting	Instrument Value
Center Frequency	5.53000 GHz
Span	ZeroSpan
RBW	3.000 MHz
VBW	3.000 MHz
SweepPoints	30001
Sweeptime	100.000 ms
Reference Level	-10.000 dBm
Attenuation	0.000 dB
Detector	MaxPeak
SweepCount	1
Filter	3 dB
Trace Mode	Clear Write
Sweeptype	Sweep
Preamp	off

Channel Move Time; Channel Closing Transmission Time

Setting	Instrument Value
Center Frequency	5.53000 GHz
Span	ZeroSpan
RBW	3.000 MHz
VBW	3.000 MHz
SweepPoints	30001
Sweeptime	20.000 s
Reference Level	-10.000 dBm
Attenuation	0.000 dB
Detector	MaxPeak
SweepCount	1
Filter	3 dB
Trace Mode	Clear Write
Sweeptype	Sweep
Preamp	off
Trigger	External
Trigger Offset	0.000 ms

Non-occupancy period

Setting	Instrument Value
Center Frequency	5.53000 GHz
Span	ZeroSpan
RBW	3.000 MHz
VBW	3.000 MHz
SweepPoints	30001
Sweeptime	1.860 ms
Reference Level	-10.000 dBm
Attenuation	0.000 dB
Detector	MaxPeak
SweepCount	1
Filter	3 dB
Trace Mode	Clear Write
Sweeptype	Sweep
Preamp	off

TEST RESULTS (Cont.):	

Radar level verification

Description	Value	Unit
Configured DUT EIRP:	3.16	mW
Configured DUT PSD:	10.00	dBm/MHz
Requirement of the Detection threshold value for this given values acc. to FCC clause 5.2 / Table 3	-64	dBm
Vector Generator level setting	-26.86	dBm
Configured overall pathlost from Vector Generator RF out to DUT connector of 'DUT to OSP'-cable	36.14	dB
Given additional level added to the amplitude of the waveform to account for variations in measurement equipment acc. to FCC clause 5.2 / Table 3 / Note 2	1.00	dB
This results in the following radar signal level at the DUT	-63.00	dBm