Panasonic®

Operating Instructions

SIP Phone

Model No. **KX-HDV330**

Thank you for purchasing this Panasonic product.
Please read this manual carefully before using this product and save this manual for future use.

Note

- In this manual, the suffix of each model number is omitted unless necessary.
- The illustrations such as some keys may differ from the appearance of the actual product.
- Certain products and features described in this document may not be available in your country or area. Contact your phone system dealer/service provider.
- The contents and design of the software are subject to change without notice.

Document Version: 2015-10

Outline

This manual describes information about the installation and operation of KX-HDV330.

Related Documentation

- **Quick Start Guide**
  Describes basic information about the installation and safety precautions to prevent personal injury and/or damage to property.
- **Administrator Guide**
  Describes detailed information about the configuration and management of this unit.

Manuals and supporting information are provided on the Panasonic Web site at:
http://www.panasonic.net/pcc/support/sipphone/

For Future Reference

Record the information in the space below for future reference.

Note

- The serial number and MAC address of this product may be found on the label affixed to the bottom of the unit. You should note the serial number and MAC address of this unit in the space provided and retain this manual as a permanent record of your purchase to aid in identification in the event of theft.

MODEL NO.	
SERIAL NO.	
MAC ADDRESS	
DATE OF PURCHASE	
NAME OF DEALER	
DEALER'S ADDRESS	
DEALER'S TEL. NO.	

Other Information

Trademarks

- The Bluetooth® word mark and logos are owned by the Bluetooth SIG, Inc. and any use of such marks by Panasonic Corporation is under license.
- All other trademarks identified herein are the property of their respective owners.

Important Information

Important Information 4
For Users in European Countries 5
For Users in the United Kingdom 5
For Users in Australia 5
For Users in Australia and the United Kingdom 6
For Users in New Zealand 6
For Users in the United States 6
For Users in Canada 8
For Best Performance 9

Before Operating the Telephones

Accessory Information 10
Location of Controls 12
The Display and Icons 19
Adjusting the Volume 26
Incoming/Outgoing Call Log 26
Setting the Password 27
Selecting the Display Language 27
Entering Characters 27
Bluetooth Headset 28
Basic Operation 29

Making Calls

Making Calls 30
Basic Calling 30
Easy Dialing 30
Making a Multicast Voice Paging call 32

Receiving Calls

Receiving Calls 33
Answering Calls 33
Hands-free Mode 34
Training Mode 34

During a Conversation

During a Conversation 35

Before Leaving Your Desk

Call Forwarding/Do Not Disturb 38
Listening to Voice Mail Messages 38
Xsi Visual Voice Mail 38

Using the Phonebook

Using the Phonebook 40
Using the Personal Phonebook 41
Using the Shared Phonebook 47
ECO Mode 47
Checking the Line Status 48

Customizing the Telephone

Customizing the Telephone 50

Installation and Setup

Installation and Setup 57
Updating the software 64

Appendix

Appendix 65

Important Information

Data Security

We cannot be responsible for damages resulting from the misuse of this product.

- Keep a copy of all important data (such as the phonebook list) in case the machine malfunctions and data cannot be recovered.
- This product can store your private/confidential information. To protect your privacy/confidentiality, we recommend that you erase the information such as the phonebook or call log from the memory before you dispose of, transfer or return the product, or have the product repaired.
- To avoid unauthorized access to this product:
  - Keep the password secret.
  - Change the default password.
  - Set a password that is random and cannot be easily guessed.
  - Change the password regularly.
- Security settings, such as passwords, cannot be undone at Panasonic service centers. Take measures to prevent passwords from being lost or forgotten.
- If a password is forgotten, initialize the unit and configure the settings again. For details, consult your administrator or dealer.
- It is recommended that you lock the phonebook to prevent stored information from being leaked.

Disposal of Old Equipment and Batteries
Only for European Union and countries with recycling systems

These symbols on the products, packaging, and/or accompanying documents mean that used electrical and electronic products and batteries must not be mixed with general household waste.
For proper treatment, recovery and recycling of old products and batteries, please take them to applicable collection points in accordance with your national legislation.
By disposing of them correctly, you will help to save valuable resources and prevent any potential negative effects on human health and the environment.
For more information about collection and recycling, please contact your local municipality.
Penalties may be applicable for incorrect disposal of this waste, in accordance with national legislation.

Note for the battery symbol (bottom symbol)
This symbol might be used in combination with a chemical symbol. In this case it complies with the requirement set by the Directive for the chemical involved.

For Users in European Countries

The following declaration is applicable to KX-HDV330NE/KX-HDV330X only

CE 0470

Panasonic System Networks Co., Ltd. declares that this equipment is in compliance with the essential requirements and other relevant provisions of Radio & Telecommunications Terminal Equipment (R&TTE) Directive 1999/5/EC.
Declarations of Conformity for the relevant Panasonic products described in this manual are available for download by visiting:
http://www.ptc.panasonic.eu

Contact to Authorized Representative:
Panasonic Testing Center
Panasonic Marketing Europe GmbH
Winsbergring 15, 22525 Hamburg, Germany

Ecodesign information
Ecodesign information under EU Regulation (EC) No.1275/2008 amended by (EU) Regulation No. 801/2013.
==========
Please visit here: www.ptc.panasonic.eu
click [Downloads]
→ Energy related products information (Public)
==========
Power consumption in networked standby and guidance are mentioned in the web site above.

For Users in the United Kingdom

- This unit is designed to be installed under controlled conditions of ambient temperature and a relative humidity.
- Avoid installing the unit in damp or humid environments, such as bathrooms or swimming pools.
- 999 and 112 can be dialed on the product after accessing the outside line for the purpose of making outgoing calls to the BT emergency (999) and (112) services.
  The method for accessing an outside line differs depending on the SIP server. For details, confirm the features of the SIP server.

For Users in Australia

WARNING

- Please ensure that a separate telephone, not dependent on local power, is available for emergency use.
- This equipment will be inoperable when mains power fails.
- No “000” or other calls can be made from this device during a mains power failure.

For Users in Australia and the United Kingdom

- This unit is capable of being used in conjunction with hearing aids fitted with inductive coil pick-ups. The handset should be held as for normal conversation. For operation, the hearing aid should be set to its "T" position or as directed in the operating instructions for the hearing aid.
- This unit is designed to aid the visually handicapped to locate dial keys and buttons.

For Users in New Zealand

- This equipment shall not be set to make automatic calls to the Telecom ‘111’ Emergency Service.

PTC General Warning

- The grant of a Telepermit for any item of terminal equipment indicates only that Telecom has accepted that the item complies with minimum conditions for connection to its network. It indicates no endorsement of the product by Telecom, nor does it provide any sort of warranty. Above all, it provides no assurance that any item will work correctly in all respects with another item of Telepermitted equipment of a different make or model, nor does it imply that any product is compatible with all of Telecom’s network services.

The Use of IP Networks through the PSTN

- Internet Protocol (IP) by its nature introduces delay into speech signals as each data packet is formulated and addressed. Telecom Access Standards recommends that suppliers, designers and installers using this technology for calls to or from the PSTN refer to ITU E Model requirements in the design of their networks. The overall aim is to minimize delay, distortion and other transmission impairments, particularly for those calls involving cellular and international networks, which already suffer extensive delay.

Echo cancellation

- Echo cancelers are not normally required in the Telecom PSTN because geographic delays are acceptable where CPE return loss is maintained within Telepermit limits. However, those private networks making use of Voice over IP technology are required to provide echo cancellation for all voice calls. The combined effect of audio/VoIP conversion delay and IP routing delay can cause the echo cancellation time of ≥ 64 ms to be required.

Important Notice

- Under power failure conditions this appliance may not operate. Please ensure that a separate telephone, not dependent on local power, is available for emergency use.
- No “111” or other calls can be made from this device during a mains power failure.

For Users in the United States

Note

- This equipment has been tested and found to comply with the limits for a Class B digital device, pursuant to Part 15 of the FCC Rules. These limits are designed to provide reasonable protection against harmful interference in a residential installation. This equipment generates, uses, and can radiate radio frequency energy and, if not installed and used in accordance with the instructions, may cause harmful interference to radio communications. However, there is no guarantee that interference will not occur in a particular installation. If this equipment does cause harmful interference to radio or

television reception, which can be determined by turning the equipment off and on, the user is encouraged to try to correct the interference by one or more of the following measures:
– Reorient or relocate the receiving antenna.
– Increase the separation between the equipment and receiver.
– Connect the equipment to an outlet on a circuit different from that to which the receiver is connected.
– Consult the dealer or an experienced radio/TV technician for help.
This device complies with Part 15 of the FCC Rules. Operation is subject to the following two conditions:
(1) this device may not cause harmful interference, and (2) this device must accept any interference received, including interference that may cause undesired operation.

WHEN PROGRAMMING EMERGENCY NUMBERS AND/OR MAKING TEST CALLS TO EMERGENCY NUMBERS:
1. Remain on the line and briefly explain to the dispatcher the reason for the call before hanging up.
2. Perform such activities during off-peak hours, such as early morning or late evening.

CAUTION

Any changes or modifications not expressly approved by the party responsible for compliance could void the user's authority to operate this product.

FCC RF Exposure Warning:
- This product complies with FCC radiation exposure limits set forth for an uncontrolled environment.
- To comply with FCC RF exposure requirements, this product must be installed and operated 20 cm (8 inches) or more between the product and all person's body.
- This product may not be collocated or operated in conjunction with any other antenna or transmitter.

FCC ID can be found on the bottom of the units.

Privacy of communications may not be ensured when using this phone.

Hearing Aid Compatibility

This telephone provides magnetic coupling for hearing aids as defined by the FCC in 47 CFR Section 68.316. Use only handsets or other acoustic devices with this equipment that are compliant with the hearing aid compatibility requirements of FCC Part 68.
When you hold the phone to your ear, noise might be heard in your Hearing Aid. Some Hearing Aids are not adequately shielded from external RF (radio frequency) energy. If noise occurs, use an optional headset accessory or the speakerphone option (if applicable) when using this phone. Consult your audiologist or Hearing Aid manufacturer about the availability of Hearing Aids which provide adequate shielding to RF energy commonly emitted by digital devices.

Compliance with TIA-1083 standard:

Telephone handsets identified with this logo have reduced noise and interference when used with T-Coil equipped hearing aids and cochlear implants.

Responsible Party
Panasonic Corporation of North America
Two Riverfront Plaza, Newark, NJ 07102-5490

Technical Support
Panasonic Corporation of North America
Two Riverfront Plaza, Newark, NJ 07102-5490
Telephone: 1 (800) 528-6747 Option 1

For Users in Canada

Industry Canada Notices and Other Information
This product meets the applicable Industry Canada technical specifications.

Note

- This Class B digital apparatus complies with Canadian ICES-003.

CAUTION

Any changes or modifications not expressly approved by the party responsible for compliance could void the user's authority to operate this product.

Compliance with TIA-1083 standard:

Telephone handsets identified with this logo have reduced noise and interference when used with T-Coil equipped hearing aids and cochlear implants.

RF Exposure Warning:

- This product complies with IC radiation exposure limits set forth for an uncontrolled environment.
- To comply with IC RF exposure requirements, this product must be installed and operated 20 cm (8 inches) or more between the product and all person's body.
- This product may not be collocated or operated in conjunction with any other antenna or transmitter.

Privacy of communications may not be ensured when using this phone.

For Best Performance

Environment

- Keep the product away from heating appliances and devices that generate electrical noise, such as fluorescent lamps, motors and televisions. These noise sources can interfere with the performance of the product.
- Do not place the product in rooms where the temperature is less than 0 °C (32 °F) or greater than 40 °C (104 °F).
- Allow 10 cm (3–15/16 in) clearance around the product for proper ventilation.
- Avoid environments with excessive smoke, dust, moisture, mechanical vibration, shock, or direct sunlight.
- The apparatus is designed to be installed and operated under controlled conditions of ambient temperature and a relative humidity.

Routine Care

- Unplug the AC adaptor from the AC outlet and disconnect the Ethernet cable before cleaning.
- Wipe the product with a soft cloth.
- Do not clean the product with abrasive powder or with chemical agents such as benzine or thinner.
- Do not use liquid cleaners or aerosol cleaners.

Touch Display

- Touch the display only with the end of your finger. Do not touch the display with sharp objects, such as a pen or your fingernails.
- Use only one finger. Touching the display with more than one finger can result in unexpected behavior.

Placement

- Do not place heavy objects on top of the product.
- Care should be taken so that objects do not fall onto, and liquids are not spilled into, the product.

Optional Equipment

- A KX-HDV20 (20 Key Expansion Module) can be used with the product.
- The KX-HDV20 can be used only when the product receives power from the optional AC adaptor; it cannot be used when the product receives power via Power-over-Ethernet (PoE).
- Up to 5 KX-HDV20 units can be connected to the product.
  However, if you mount the product on a wall, mount in with only one KX-HDV20 unit attached to the KX-HDV330. To mount a second KX-HDV20 unit or more, mount each in turn, unattached to the main unit.

Accessory Information

Included Accessories

Handset: 1 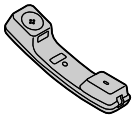	Handset Cord: 1	Stand: 1 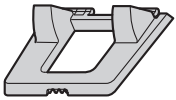
Wall Mounting Adaptor: 1 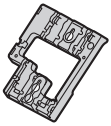	Screws for wall mounting: 3*1	

*1 The two large screws are for mounting the unit on the wall. The small screw is for attaching the wall mounting adaptor to the unit.

Optional Accessories

Item	Model	AC Adaptor Model No.*2
AC Adaptor*1	KX-HDV330NE/ KX-HDV330RU	KX-A422CE (PNLV228)
	KX-HDV330X	KX-A422AG (PNLV228)/ KX-A422AL (PNLV228)/ KX-A422BR (PNLV228)/ KX-A422CE (PNLV228)/ KX-A422UK (PNLV228)/ KX-A422X (PNLV228)
	KX-HDV330SX	KX-A422SX (PNLV228)
	KX-HDV330/ KX-HDV330C	KX-A422 (PNLV228)

*1 This unit complies with the IEEE 802.3af Power-over-Ethernet (PoE) standard. If PoE is available on your network, this unit can receive the necessary power from the network through the Ethernet cable. In this case, no AC adaptor is needed. However, if PoE is not available or if you will use a KX-HDV20 (20 Key Expansion Module), you will need to connect an AC adaptor to the unit.

*2 To order an optional AC adaptor, please order using the "KX-A422xx" model number.
For details about which AC adaptor model number you should order, consult your dealer.

Item	Model	20 Key Expansion Module Model No.
20 Key Expansion Module	KX-HDV330NE	KX-HDV20NE
	KX-HDV330RU	KX-HDV20RU
	KX-HDV330X	KX-HDV20X
	KX-HDV330SX	KX-HDV20SX
	KX-HDV330/ KX-HDV330C	KX-HDV20

KX-HDV20 Included Accessories

Stand: 1	Connection cable: 1	Wall mount adaptor for KX-HDV20: 1
Screws for wall mounting: 3*1	Screw for attaching the KX-HDV20 to the unit: 1	

*1 The two large screws are for mounting the unit on the wall. The small screw is for attaching the wall mounting adaptor to the unit.

Note

For users in the United States only

To order accessories, call toll-free **1-800-332-5368**.

Location of Controls

KX-HDV330NE

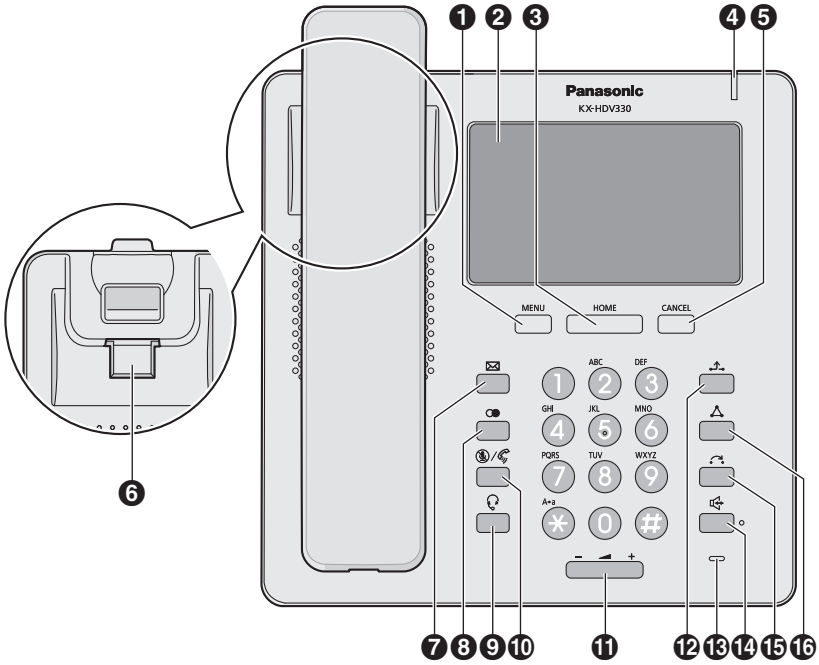

KX-HDV330X/KX-HDV330SX

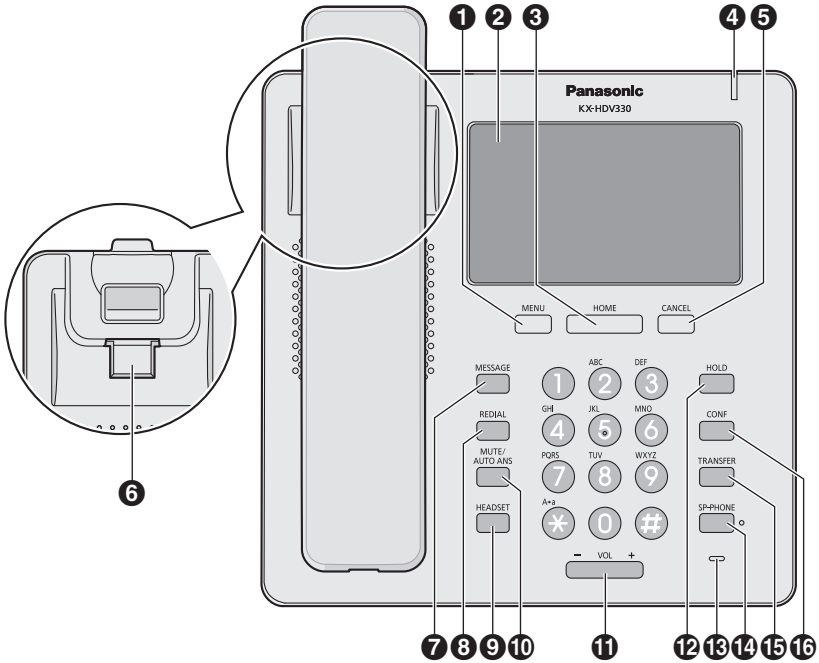

KX-HDV330RU

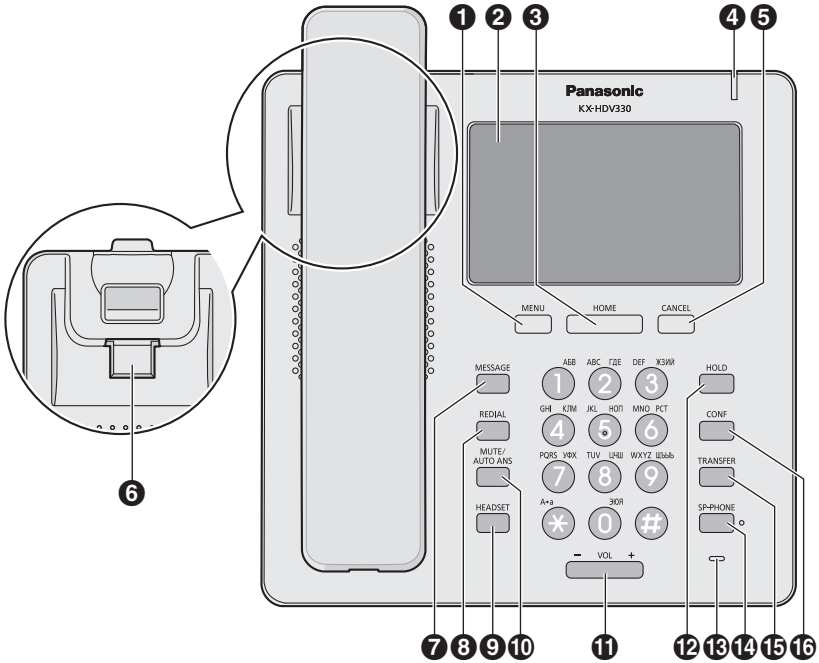
Panasonic
KX-HDV330
MENU
HOME
CANCEL
MESSAGE
HOLD
REDIAL
CONF
MUTE/
AUTO ANS
TRANSFER
HEADSET
SP-PHONE
VOL

KX-HDV330

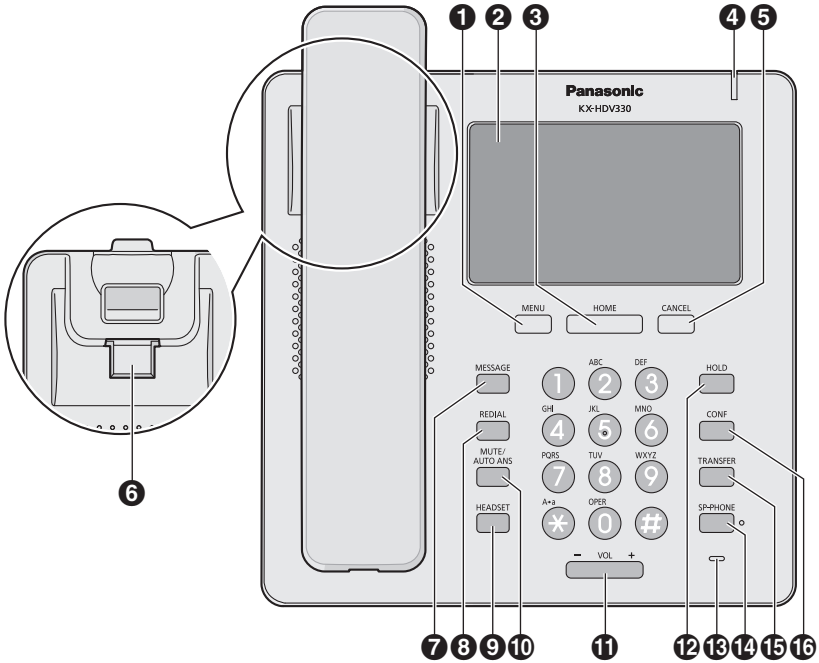
Panasonic
KX-HDV330
MENU
HOME
CANCEL
MESSAGE
HOLD
REDIAL
CONF
MUTE/
AUTO ANS
TRANSFER
HEADSET
SP-PHONE
VOL
ABC
DEF
GHI
JKL
MNO
PQRS
TUV
WXYZ
A•a
OPER

KX-HDV330C

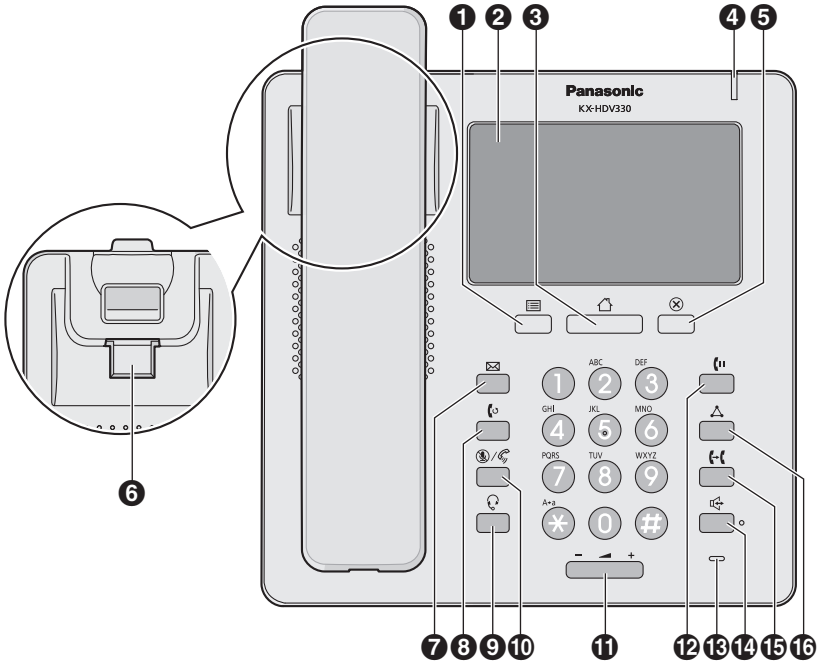

KX-HDV20NE/KX-HDV20X/KX-HDV20SX/KX-HDV20RU/KX-HDV20

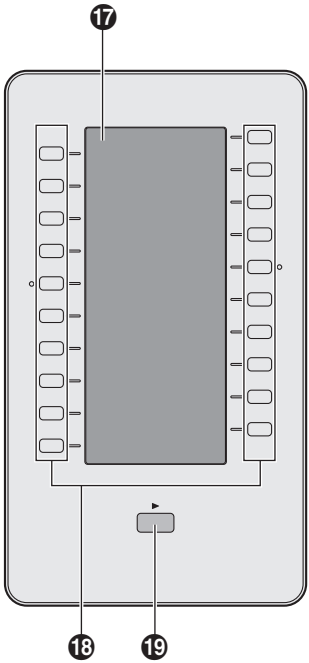

❶ **/MENU**
Display the menu. The contents of the menu differ depending on the settings and mode.

❷ **Touch display**
For details about the display, see "Display", Page 19.

❸ **/HOME**
Return to the Home screen.
Depending on the mode, the screen you return to and other operations differ. Pressing this key in standby mode displays function keys 1 to 4.

❹ **Ringer/Message Waiting/Missed Call Indicator**
The lamp flashes when you are receiving a call, or when you have an unread message or missed call notification.

❺ **/CANCEL**
Used to cancel the selected item.

❻ **Handset Hook**
Keeps the handset stable when the unit is mounted on a wall. For details, see "Hooking the Handset", Page 64.

❼ **/MESSAGE**
Used to access your voice mailbox.

❽ **/REDIAL**
Used to redial the last dialed number.

❾ **/HEADSET**
Used for performing headset operations.

⑩ **/MUTE/AUTO ANS**
Used to receive an incoming call in hands-free mode or mute the microphone/handset during a conversation.

⑪ **/VOL**
Used to adjust the ringer/receiver volume.

⑫ **/HOLD**
During talking, used to place a call on Hold. In standby mode, used to retrieve a call on hold if there is one.

⑬ **Microphone**
Used for hands-free conversation.

⑭ **/SP-PHONE**
Used for performing hands-free operations.

⑮ **/TRANSFER**
Used to transfer a call to another party.

⑯ **/CONF**
Used to establish a multiple-party conversation.

⑰ **Self-labeling LCD**
For details about the self-labeling LCD, see "KX-HDV20 Self-labeling LCD", Page 23.

⑱ **DSS Keys [01–20]*1**
Used to perform the assigned function. When a key is assigned as a Line key, it can be used to confirm the status of the line. The key name that you assigned is displayed on the KX-HDV20's self-labeling LCD. For details about changing the DSS keys, see "Changing the Function Keys (Program Keys and DSS Keys)", Page 51.

⑲ **DSS Page Key*1**
Used to switch the page of DSS keys displayed on the KX-HDV20 self-labeling LCD. There are two pages of 20 DSS keys.

*1 These keys can be used when you connect a KX-HDV20 to the unit.

Note

- "DSS" stands for "Direct Station Selection".

The Display and Icons

Display

[Example]

❶ **Status bar**
There are 2 display patterns for the status bar, which alternate back and forth. Tapping this area has no effects.
Pattern A: Status icons (settings, hold, incoming call, etc.) and time
Pattern B: Number and name of the telephone line, communication method icons (handset, headset, speakerphone, etc.), mute icon, and time
While configuring settings, the screen title is displayed.

❷ **Operation area**
Displays the screens for all functions. Tapping here operates the telephone.
The icons for the top screen change depending on the phone's status.

Icons displayed in the status bar

Suffix		Meaning
(none)/C	NE/RU/SX/X	
		Handset in use
		Headset in use
		Using speakerphone
		Off-hook monitor
		Training mode
Fwd		Fwd enabled
DND		DND enabled
AutoAns.		Auto answer enabled
		Mute

Suffix		Meaning
(none)/C	NE/RU/SX/X	
		Ringer off
		Call on hold
		Call on hold in a Call Park zone
		Conference hold
		ECO mode enabled
		Receiving an incoming call
		Network error
		Bluetooth® connection established
		Bluetooth connection not established
		New message
		Missed call
		Phonebook lock

Operation icons displayed in the operation area

Icon	Meaning
	Back
	Personal Phonebook
	Shared Phonebook
	Add contact
	Enter delete mode
	Execute delete
	Enter edit mode
	Select all items
	Save
	Cancel
	Scroll up
	Scroll down
	Scroll left

Icon	Meaning
	Scroll right
	Move the cursor left
	Move the cursor right
	Backspace
	Pause
;	Selected
;	Unselected
	Search
	Category
	Missed calls
	Incoming calls
	Outgoing calls
	New missed call
	Confirmed missed call
	Number of unread voice mails
	Unread voice mail
	Read voice mail
	Call Forwarding
	Do Not Disturb
	Anonymous call
	Anonymous call rejection
	Change a message between read and unread
	Go on-hook
	Mute
	Ringer off

Character input icons

Suffix		Meaning
(none)/C	NE/RU/SX/X	
ABC		Latin character entry mode
0 - 9		Numeric character entry mode
+ÀÂÂ	AÄÅ	Special character (Extended 1) entry mode
Sśš		Special character (Extended 2) entry mode
АВГ		Greek character entry mode
АБВ		Cyrillic character entry mode

Note

- Example images of the display in this manual are samples only, and the actual screen on your phone may vary in color and/or appearance.
- Descriptions of icons displayed with text are not included.

KX-HDV20 Self-labeling LCD

[Example]

KX-HDV20 (Optional model)*1

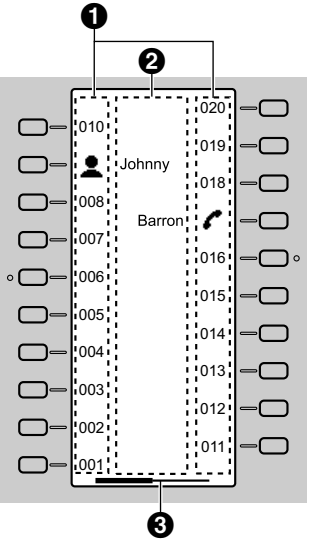

*1 Up to 40 keys (20 keys × 2 pages) can be registered.

❶ **Pictographs**

Pictograph	Meaning	Pictograph	Meaning
(Number)	No function is assigned.		Phonebook
	One Touch Dial		Call History
	Line		Simultaneous Ring
	Line Status		Wrap Up
	BLF		Directed Call Pickup
	ACD (Login/Logout)		Call Forward
	Hoteling/Hospitality		Transfer
	Conference		Blind Transfer
			Park
			Park Retrieve

❷ **Function Label Name**

❸ **Page Information**

Indication	Meaning
▬▬▬	Displaying page 1

Indication	Meaning
——▬▬	Displaying page 2

Note

- Images of the display in this manual are samples only. The actual screen on your phone may vary in color and/or appearance.

Main Menu

The following menu items are displayed in standby mode.

Function
Displays the function keys.
See "Changing the Function Keys (Program Keys and DSS Keys)", Page 51.

Voice Message
Used to access your voice mailbox.
See "Listening to Voice Mail Messages", Page 38.

Fwd/DND*1
Sets the Call Forwarding or Do Not Disturb features.
See "Call Forwarding/Do Not Disturb", Page 38.

Paging*1
Makes a Multicast Voice Paging call.
See "Making a Multicast Voice Paging call", Page 32.

Call History
Used to display the call log.
See "Incoming/Outgoing Call Log", Page 26.

Phonebook
Used to access the Personal or Shared Phonebook.
See "Using the Phonebook", Page 40.

Line Status
Used to display the status of each line on the LCD.
See "Checking the Line Status", Page 48.

Basic Settings
Used to access the basic settings menu.
See "Changing the Basic Settings", Page 55.

System Settings
Used to access the system settings menu.
See "Changing the System Settings", Page 55.

Advanced Settings
Used to access the advanced settings menu.
See "Changing the Advanced Settings", Page 55.

Call Center/Call Centre*1
Used to access the Call Center feature.

Presence*1
Used to access the Presence feature.

Application*1
Used to access the Application feature.

*1 This item is displayed only when the feature is enabled. Contact your administrator for further information.

Adjusting the Volume

Adjusting the Receiver/Speaker/Headset Volume

1. Press [−]/[+] volume key: Adjust the volume during a conversation.

Note

- Both receiver volume and headset volume are adjusted in training mode. See “Training Mode”, Page 34.

Adjusting the Ringer Volume or Turning the Ringer Off

[In standby mode]

1. Press [−]/[+] volume key: Adjust the ringer volume.
2. Tap "OK".

Note

- For details about setting the ringer pattern, see “Incoming Option”, Page 67.

Adjusting the Ringer Volume or Turning the Ringer Off while Ringing

While receiving a call, do the following to adjust the ringer volume or turn the ringer off:

Note

- If you attach a headset while receiving an incoming call, ringing will be heard from the speaker.

To adjust the ringer volume

1. Press [−]/[+] volume key: Adjust the ringer volume.

Note

- The adjusted volume level will also be used for subsequent calls.
- The volume can also be adjusted in the pop-up window.

To turn the ringer off

1. Tap .

Incoming/Outgoing Call Log

Displaying the Incoming/Outgoing Call Log

[In standby mode]

1. Tap / → "Call History"
2. Missed Call Log: Tap .
   Incoming Call Log: Tap .
   Outgoing Call Log: Tap .

Making a call using the Incoming/Outgoing Call Log

See “Using the Incoming/Outgoing Call Log”, Page 31.

Storing an item using the Incoming/Outgoing Call Log

See “Storing an Item Using the Incoming or Outgoing Call Log”, Page 42.

Deleting Items in the Incoming/Outgoing Call Log

[When the Incoming or Outgoing Call Log is displayed]

1. Tap .
2. Tap / : Tap the check boxes of the items you want to delete.
3. Tap . → "OK"

Note

- You can select all items in the list by tapping .

Setting the Password

The telephone password is not set by default. You must register a password (4 digits) before use. You cannot use the following features without setting a password:

- Phonebook lock (See "Locking the Phonebook", Page 46).

Note

- To avoid unauthorized access to this product:
  - Set a password that is random and cannot be easily guessed.
  - Change the password regularly.
- Make a note of the password so that you will not forget it.

To set

[In standby mode]

1. Tap / → "Basic Settings"
2. Tap / → "Other Option"
3. Tap "Change Password".
4. Enter a new password (4 digits [0–9]).*1 → "OK"
5. Verify the password by entering it again as in step 4.

*1 If a password is already set, you will need to enter the old password first.

Selecting the Display Language

You can select the language displayed on your LCD.

[In standby mode]

1. Tap / → "Basic Settings"
2. Tap / → "Display Option"
3. Tap / → "Language"
4. Tap / : Select a language. → "OK"

- For a list of the languages that can be selected, see "Display Option", Page 69.

Entering Characters

You can enter characters and digits using the dialing keys.
You can select one of the character modes by tapping the desired character mode while entering a name.

For available characters, see "Character Mode Table", Page 65.
To change the character mode while editing a name in the phonebook, tap the desired character mode.

Model No.	Character Mode
KX-HDV330NE, KX-HDV330X, KX-HDV330SX	ABC (Latin) 0-9 (Numeric) ΑΒΓ (Greek) ÄÄÅ (Extended 1) ŚŚŠ (Extended 2)
KX-HDV330RU	АБВ (Cyrillic) 0-9 (Numeric) ABC (Latin) ÄÄÅ (Extended 1) ŚŚŠ (Extended 2)
KX-HDV330, KX-HDV330C	ABC (Latin) 0-9 (Numeric) +ÄÅ (Extended 1)

Example: To enter "Anne" in Latin Mode.

2 → → * → 6 → 6 → → 6 → 6 → → 3 → 3

- To switch between uppercase and lowercase, press *.
- To enter a character located on the same dialing key as the previous character, move the cursor by tapping →, then enter the desired character.
- If you enter a different character by mistake, tap ← or → to highlight the character, tap ⌫ to delete it, then enter the correct character.
- To clear an entire line, tap "Delete".

Bluetooth Headset

Before using a Bluetooth headset, you need to register it to the unit.

Registering a Bluetooth headset

Set the headset to pairing mode by following the instructions in the headset's documentation.

1. Tap > / < → "Basic Settings"
2. Tap ∧ / ∨ → "Bluetooth Headset"
3. Tap "Add New Device".
4. Enter the PIN.*1 → "OK"

*1 For more information regarding the PIN, see the documentation for your headset.

Deregistering a Bluetooth headset

1. Tap > / < → "Basic Settings"
2. Tap ∧ / ∨ → "Bluetooth Headset"
3. Tap "Registration". → "Yes"

Connecting a Bluetooth headset

1. Tap > / < → "Basic Settings"
2. Tap ∧ / ∨ → "Bluetooth Headset"
3. Tap "Connection". → "On" → "OK"

Disconnecting a Bluetooth headset

1. Tap > / < → "Basic Settings"
2. Tap ∧ / ∨ → "Bluetooth Headset"
3. Tap "Connection". → "Off" → "OK"

Note

- During a conversation using a Bluetooth headset, the receiver volume can be adjusted using the volume key on either the headset or the main unit.
- The connection status can be viewed on the status bar.
- Signals are transmitted between the unit and the Bluetooth headset using radio waves. For maximum distance and noise free operation, it is recommended that the unit be situated away from electrical appliances such as faxes, radios, personal computers, and microwaves.
- Privacy of communications may not be ensured when using the unit.

Basic Operation

Going off-hook

In this manual, when you see the phrase "off-hook", you can do any of the following:

- Lift the corded handset off its cradle.
- Press /[SP-PHONE] while the corded handset is on its cradle. This enables hands-free mode.
- Press /[HEADSET] when using a headset.
- Tap the corresponding function key to select a line.*1

*1 When a function key is assigned as a Line key or Line Status key, this feature is available.

Going on-hook

In this manual, when you see the phrase "on-hook", you can do any of the following:

- Replace the corded handset on its cradle.
- Press /[SP-PHONE] when you are in hands-free mode.
- Press /[HEADSET] when using a headset.
- Press ⊗/[CANCEL].
- Tap "Off".

Making Calls

- You can confirm that the number was dialed correctly before calling (Predialing) by entering the number, then going off-hook.
- If an outside call is received from a phone number stored in the phonebook, the number and name of the caller will be displayed in the call log.
- To cancel dialing, press ⊗/[CANCEL].
- To insert a 3 second pause between phone numbers, tap "Pause".*1
  It is useful when you want to operate voice mail service without listening to pre-recorded announcement, for example. Repeat as needed to create longer pauses.
- The "+" symbol (international dialing code) can be entered by pressing and holding the "#" key.

*1 This icon is displayed only when configured on the telephone. Contact your administrator for further information.

Basic Calling

Calling by Dialing

1. In standby mode, go off-hook.
2. Dial the outside party's number.
3. Tap "Voice Call".
4. Go on-hook to end the call.

Note

- You can use a specific line by pressing a function key assigned to a line (see "Changing the Function Keys (Program Keys and DSS Keys)", Page 51) or by using the Line Status screen (see "Checking the Line Status", Page 48).
- To dial a new number without going on-hook, follow the procedure below.

  [During a Conversation]
  1. Press ▤/[MENU].
  2. Tap "Flash"/"Recall".

Predialing
In standby mode, you can start dialing while still on-hook. After dialing the number, go off-hook to begin the call.

Easy Dialing

Making a call using the redial list

The last phone number dialed is stored in the redial list (32 digits max.).

[In standby mode]
1. Press ●/[REDIAL].
2. Go off-hook.

Note

- If this procedure is performed during a conversation, the conversation will end, and then redialing is performed.

Hot Key Dialing

You can assign a phone number to each number key and then access the desired phone number by simply pressing and holding the assigned number key.

1. Press and hold the dialing key (0–9) assigned as a Hot Key for more than 1 second.
2. Go off-hook.

Note

- While the Hot Key's information is displayed, you can tap ∧ or ∨ to select another Hot Key number.
- If Hot Key dialing is set to "Auto", a Hot Key number can also be dialed by pressing and holding the assigned dialing key for a specified number of seconds. For details, see "Selecting the Type of Hot Key Dialing", Page 51.
- For details about assigning Hot Keys, see "Assigning Hot Keys From Phonebook", Page 50.

Using the Hot Line

If your administrator has configured this function, you can make a call to a registered phone number automatically. Contact your administrator for further information.

[In standby mode]

1. Go off-hook.

Using the Incoming/Outgoing Call Log

Using the Incoming Call Log

[In standby mode]

1. Tap > / < → "Call History"
2. Missed Call Log: Tap .
   Incoming Call Log: Tap .
3. Tap ∧ / ∨ : Select an incoming call log.
4. Go off-hook.

Using the Outgoing Call Log

[In standby mode]

1. Tap > / < → "Call History"
2. Tap .
3. Tap ∧ / ∨ : Select an outgoing call log.
4. Go off-hook.

Using the Phonebook

Using the Personal Phonebook

[In standby mode]

1. Tap > / < → "Phonebook"
2. If "Shared Phonebook" is displayed as the title, tap .*1
3. Search for the desired item.*2
4. Tap ∧ / ∨ : Select the desired item.
5. Select the desired phone number.

6. Go off-hook.

*1 If only Personal Phonebook is permitted, this step is skipped.

*2 For details, see “Searching for an Item in the Personal Phonebook”, Page 45.

Note

- If the Personal Phonebook is not permitted, this feature cannot be used. Contact your administrator for further information.

Using the Shared Phonebook

[In standby mode]

1. Tap > / < → "Phonebook"
2. If "Phonebook" is displayed as the title, tap .*1
3. Search for the desired item.*2
4. Tap ^ / v : Select the desired item.
5. Select the desired phone number.
6. Go off-hook.

*1 If only Shared Phonebook is permitted, this step is skipped.

*2 For details, see “Searching for an Item in the Shared Phonebook”, Page 47.

Note

- If the Shared Phonebook is not permitted, this feature cannot be used. Contact your administrator for further information.

Making a Multicast Voice Paging call

When you make a paging call, the voice will be heard through the speaker phone of the other telephones.

[In standby mode]

1. Tap > / < → "Paging"*1
2. Select a desired channel group.*2 Tap ^ / v :
3. Go off-hook, or tap "Call".

*1 Paging is available only when the feature is enabled. Contact your administrator for further information.

*2 If there is only 1 channel group, paging will start immediately.

Receiving Calls

- You can select the ringer for each type of incoming call. See “Incoming Option”, Page 67.
- You can also use Auto Answer to answer a call. See “Answer Option”, Page 68.
- The volume of the ringer can be adjusted, or turned off. See “Adjusting the Ringer Volume or Turning the Ringer Off”, Page 26.
- If you attach a headset while receiving an incoming call, ringing will be heard from the speaker. Depending on the headset, ringing may be heard through the headset.
- Up to 24 calls can be received at the same time. The 25th caller will hear a busy tone.

Caller ID

If an outside call that contains Caller ID information (a caller’s name and telephone number) is received, this information will be logged in the Incoming Call Log and displayed on the LCD.
If a call from a number matching a number entered in the phonebook is received, the name registered in the phonebook for that number will be displayed along with the number.
If caller information is sent by the phone system and there is also information stored in the phonebook for the same number, the information stored in the phonebook will be displayed.

Answering Calls

To answer an incoming call

1. Go off-hook.*1

*1 When the handset is already off-hook, press and release the hook switch.

Note

- When a call is received while another call is on hold, pressing and releasing the hook switch will answer the call.

To answer an incoming call on a specific line

1. Press the corresponding function key.

Note

- When a function key is assigned as a Line key or Line Status key, this feature is available.
- Line keys with incoming calls will be flashing blue rapidly.
- You can select the ringer pattern for each type of incoming call. For details, see “Incoming Option”, Page 67.

To answer an incoming call when receiving multiple incoming calls

1. Tap "Line".
2. Tap ⌃ / ⌄ : Select an incoming call.
3. Go off-hook.

To reject an incoming call

1. While an incoming call is ringing, tap "Reject".
2. The call will be rejected, and the telephone will return to standby mode.

Note

- Calls from specific numbers can be automatically rejected. For details, see “Incoming call barring (Caller ID service users only)”, Page 53.

Hands-free Mode

In hands-free mode, you can talk and hear the other party in a conversation without using the handset. This mode is useful for performing other tasks during a conversation, such as writing.

Enabling hands-free mode

If you press /[SP-PHONE] in standby mode, you can enable hands-free mode.
During a conversation using a headset, you can enable hands-free mode by pressing /[SP-PHONE].

Canceling hands-free mode

You can cancel hands-free mode in one of the following ways:

- During a conversation in hands-free mode, go off-hook.
- While you are talking in hands-free mode and a headset is attached to the unit, press /[HEADSET] to continue the conversation using the headset.

Training Mode

In training mode, you can hear the other party in a conversation from both a headset and the handset. This mode is useful for training an operator. While the operator talks to the other party on the headset, a trainer also can listen to the other party on the handset and teach the operator how to respond to the caller.

Starting training mode

[During a conversation using a headset]

1. Go off-hook by lifting the handset off its cradle.
2. Press /[HEADSET] to start training mode.

Ending training mode

1. Replace the handset on its cradle.
   The conversation will continue using the headset.

During a Conversation

Transferring a Call (Call Transfer)

You can transfer a call to another destination (extension or outside party).

Note

- Operation for this feature may differ depending on the telephone's configuration. If the following procedure does not work, contact your administrator for further information.

To transfer

1. Press /[TRANSFER] during a conversation.
2. Dial the party you want to transfer to. → Tap "Voice Call".
3. Wait until the other party answers to announce the transfer.
4. Go on-hook.

Note

- To return to the call before the transfer destination answers, press ⊗/[CANCEL].

To do a blind transfer

1. Tap "Blind"*1 during a conversation.
2. Dial the party you want to transfer to. → Tap "Voice Call".

*1 If blind transfers are not permitted, this icon is not displayed. Contact your administrator for further information.

Holding a Call

You can put a call on hold by holding the call at your extension.

Note

- Operation for this feature may differ depending on the telephone's configuration. If the following procedure does not work, contact your administrator for further information.

Holding

To hold the current call

1. Press /[HOLD].

Note

- When a function key is assigned as a Line key, if you press a Line key other than the one for the current call, the call is put on hold or is disconnected depending on the Automatic Call Hold settings. For details, contact your phone system dealer/service provider.

To retrieve a call on hold at your line

[When one line is on hold]

1. Press /[HOLD].

[When two or more lines are on hold]

1. Press /[HOLD].
2. Tap / : Select a line on hold.

Note

- When a call is received while another call is on hold, pressing and releasing the hook switch will answer the call.
- If a function key is assigned as a Line key, and a call is on hold on that line, you can retrieve the call on hold by following the step below.
  1. Press the corresponding function key.

Holding in a System Parking Zone (Call Park)

You can use this feature as a transferring feature.
When Call Park is permitted, the "Park" icon is displayed. However, the Call Park feature number must be set beforehand. Also, depending on your phone system, you may need to enter a parking zone number to retrieve a parked call. The feature depends on your phone system. Contact your administrator for further information.

To set

1. Press /[MENU] during a conversation.
2. Tap "Park".

To retrieve (Call Park Retrieve)
[In standby mode]

1. Enter the Call Park Retrieve feature number.
2. Go off-hook.

Note

- Depending on the telephone system, may be displayed in the status bar. In this case, you can retrieve the call by pressing /[MENU] and then tapping "Park". However, to retrieve a parked call using the icon, the Call Park Retrieve feature number must be set beforehand. Contact your administrator for further information.

Talking to Two Parties Alternately (Call Splitting)

When talking to one party while the other party is on hold, you can swap the calls back and forth (alternately).

To alternate between the parties leaving one party on hold temporarily

1. Press /[HOLD] during a conversation.
2. Dial the other party's extension number.
3. After talking to the other party, tap "Line Status".
4. Tap / : Select the original party.
5. Talk to the party.

Three-party Conference

During a conversation, you can add an additional party to your call and establish a conference call.

Note

- Your phone system may support advanced conference features, such as conference calls with four or more parties. In this case, the procedures for handling a conference call may be different from those explained in this section. For details, contact your phone system dealer/service provider.

Making a Conference Call

1. Press /[CONF] during a conversation.
2. Dial the party you want to add to the conversation. → Tap "Voice Call".
3. Press /[CONF] after the other party has answered.

Removing a Party from the Conference

During a conference, you can remove other parties from the conference. However, this operation is available only during conference calls you initiate.

1. During a conference call, press /[HOLD].
2. Press /[HOLD] again to show the conference parties on hold.
3. Tap / : Select the party to remove.
4. Talk to the party and go on-hook to end the call.
5. Go off-hook and talk to the remaining party.

Ending a Conference Call

To end the conference call, go on-hook.

Mute

You can disable the microphone or the handset to consult privately with others in the room while listening to the other party on the phone through the speaker or the handset.

To set/cancel

1. Press / /[MUTE/AUTO ANS].

Note

- When the icon is displayed in the status bar, Mute is on.
- During Mute, even if you switch from/to speakerphone, Mute will continue.
- During Mute, even if you connect/disconnect a headset, Mute will continue.

Call Waiting

During a conversation, if a second call arrives, you will hear a call waiting tone. You can answer the second call by disconnecting or holding the current call.
This is an optional telephone company service. You can receive a call waiting tone and the caller's information. For details, contact your phone system dealer/service provider.

To disconnect the current call and then talk to the new party

1. Go on-hook.
2. Go off-hook.

To hold the current call and then talk to the new party

1. Tap "Voice Call".

Off-hook Monitor

During a two-party conversation with the corded handset, you can allow other people to listen to the conversation through the speaker while you continue the conversation using the corded handset.

To start/To cancel

1. Press /[SP-PHONE] during a conversation.

Note

- When off-hook monitor is active, replacing the corded handset to its cradle enables hands-free mode.

Call Forwarding/Do Not Disturb

You can have incoming calls automatically forwarded to another destination. You can also have incoming calls rejected (Do Not Disturb).

To access the FWD/DND settings

[In standby mode]

1. Tap > / < → "Fwd/DND"
2. If the unit has multiple lines, tap ∧ / ∨ to select the desired line.
3. Tap ∧ / ∨ : Select the type of FWD or DND setting to apply.
   The settings are as follows:
   - DND: Enable Do Not Disturb
     (All incoming calls are automatically rejected.)
   - Fwd(All): Enable Forward All Calls
     (All incoming calls are forwarded.)
   - Fwd(Busy): Enable Forward Busy
     (Incoming calls are forwarded only when your extension is in use.)
   - Fwd(NA): Enable Forward No answer*1
     (An incoming call is forwarded if you do not answer the call within a certain amount of time.)
4. (Fwd) Tap "On/Off": Select On or Off. → "Next" or "OK"
   (DND) Tap "On/Off": Select On or Off. → "OK"
5. If a Forward setting is selected, enter a new forward phone number, or confirm and modify a previously set forward phone number. → "OK"

*1 Tap "Ring Count" to specify the number of rings before the call is forwarded.

Note

- When Call Forwarding and/or Do Not Disturb is enabled, / Fwd and/or / DND appears in the status bar in standby mode.
- This feature is only available when enabled. Contact your administrator for further information.

Listening to Voice Mail Messages

When you receive a voice message, is displayed, or the Message Waiting indicator flashes slowly. You can check your new messages by accessing your mailbox.

[In standby mode]

1. Press ✉/[MESSAGE] or tap "Voice Message".
2. Tap ∧ / ∨ : Select the line on which ✉ is displayed.

Xsi Visual Voice Mail

With the Voice Messaging service of Broadsoft-Xsi, you can receive detailed information about messages from the Xsi server. The following operations are available:

- Download messages
- Mark messages as read or unread
- Delete messages

For details, contact your phone system dealer/service provider.

The following limitations apply:
- Video messages are not supported.
- Voice message format: WAV only (MP3 is unavailable)
- Voice message recording time: Maximum 5 minutes

Using the Phonebook

The KX-HDV330 has 2 types of phonebook.

1. Personal Phonebook
   This phonebook is stored in the telephone.
2. Shared Phonebook
   If your telephone company provides a shared phonebook service, you can use it. For details, contact your phone system dealer/service provider.

	Personal Phonebook	**Shared Phonebook**
Storing new items	✓	—
Editing stored items	✓	—
Deleting store items	✓	—
Searching the phonebook by name	✓	✓
Searching the phonebook by category	✓	—
Phone numbers for each item	Up to 5	Up to 5*1
Private Ring	✓	—
Locking the phonebook	✓	—

*1 This number depends on the service being used.

Using the Personal Phonebook

You can store up to 500 items (5 phone numbers per item, max. 2500 phone numbers) in the telephone along with names for easy access. You can also set unique ringer patterns for different categories to identify incoming calls. All phonebook items are stored in alphabetical order. For security purposes, you can lock the phonebook.

- To search for an item in the phonebook, see “Searching for an Item in the Personal Phonebook”, Page 45.
- To refer to another phonebook that can contain more than 500 items via the network, see “Using the Shared Phonebook”, Page 47.

Note

- We recommend that backups are made of the phonebook data, in case the data becomes unrecoverable due to product malfunction.
- You can store information for a maximum of 500 contacts.
- Phonebook data can be imported and exported. Contact your administrator for further information. A name can have up to 24 characters. A telephone number can have up to 32 digits.

Private Ring

You can organize entries in the phonebook into one of 9 Private Ring Categories. It is possible to set a different ringer pattern*1 for each category. When the displayed Caller ID*2 matches a phone number or name stored in the phonebook, the telephone rings according to the Private Ring Category settings.

*1 For Ringer patterns, see “Incoming Option”, Page 67.

*2 For Caller ID information, see “Caller ID”, Page 33.

Storing an Item in the Personal Phonebook

Storing a New Item

[In standby mode]

1. Tap / → "Phonebook"
2. Tap . → The number of remaining entries is displayed. → "OK"
3. Tap "<Enter Name>".
4. Enter a name (max. 24 characters). → "OK"
5. Tap "<Enter Phone No>".
6. Enter the phone number (max. 32 digits). → "OK"
7. Repeat steps 5 and 6 to add additional phone number types.
8. Tap "Category Off".
9. Tap / : Select a category.
10. Tap of the phone number you want to use as the entry’s default number.

    The color of the icon for the selected item changes to .
11. Tap .

Note

- Steps 8 and 9 can be omitted if you do not want to assign a category.
- Step 10 can be omitted if you do not want to assign a default number. (The first number entered for an entry will automatically be assigned as the default number.)
- The valid digits are "0" through "9", "✱", "#", "+", "P".
- If an item with the same name and number exists, the new information added will be merged with the existing item.

- To enter characters, see “Entering Characters”, Page 27.

Storing an Item Using the Dialing

You can dial a number first and then add it as a phonebook entry.

To add a new entry:
[In standby mode]

1. Dial a number.
2. Tap "Phonebook".
3. Tap "Create New Item". → "OK"
4. The number of remaining entries is displayed. → "OK"
5. Tap "<Enter Name>".
6. Enter a name (max. 24 characters). → "OK"
7. Tap "Category Off".
8. Tap / : Select a category.
9. Tap of the phone number you want to use as the entry’s default number.

   The color of the icon for the selected item changes to .
10. Tap .

Note

- Steps 7 and 8 can be omitted if you do not want to assign a category.
- Step 9 can be omitted if you do not want to assign a default number. (The first number entered for an entry will automatically be assigned as the default number.)
- The valid digits are "0" through "9", "*", "#", "+", "P".
- If an item with the same name and number exists, the new information added will be merged with the existing item.
- To enter characters, see “Entering Characters”, Page 27.

To add the phone number to an existing entry:
[In standby mode]

1. Dial a number.
2. Tap "Phonebook".
3. Tap "Add Number". → "OK"
4. Tap .
5. Enter the name or the first character(s) of the desired name. → "OK"
6. Tap / : Select the desired name.
7. Tap of the phone number you want to use as the entry’s default number.

   The color of the icon for the selected item changes to .
8. Tap .

Note

- Step 7 can be omitted if you do not want to assign a default number. (The first number entered for an entry will automatically be assigned as the default number.)
- The valid digits are "0" through "9", "*", "#", "+", "P".
- If an item with the same name and number exists, the new information added will be merged with the existing item.
- To enter characters, see “Entering Characters”, Page 27.

Storing an Item Using the Incoming or Outgoing Call Log

You can add a number listed in the Incoming or Outgoing Call Log to the Personal Phonebook.

To add a new entry:
[In standby mode]

1. Display the Incoming or Outgoing Call Log. For details, see “Incoming/Outgoing Call Log”, Page 26.
2. Tap / : Select the desired item.
3. Tap "Save Phonebook".
4. Tap "Create New Item". → "OK"
5. The number of remaining entries is displayed. → "OK"
6. Tap "<Enter Name>".
7. Enter a name (max. 24 characters). → "OK"
8. Tap "Category Off".
9. Tap / : Select a category.
10. Tap of the phone number you want to use as the entry’s default number.

    The color of the icon for the selected item changes to .
11. Tap .

Note

- Steps 8 and 9 can be omitted if you do not want to assign a category.
- Step 10 can be omitted if you do not want to assign a default number. (The first number entered for an entry will automatically be assigned as the default number.)
- The valid digits are "0" through "9", "✱", "#", "+", "P".
- If an item with the same name and number exists, the new information added will be merged with the existing item.
- To enter characters, see “Entering Characters”, Page 27.

To add the phone number to an existing entry:
[In standby mode]

1. Display the Incoming or Outgoing Call Log. For details, see “Incoming/Outgoing Call Log”, Page 26.
2. Tap / : Select the desired item.
3. Tap "Save Phonebook".
4. Tap "Add Number". → "OK"
5. Tap .
6. Enter the name or the first character(s) of the desired name. → "OK"
7. Tap / : Select the desired name.
8. Tap of the phone number you want to use as the entry’s default number.

   The color of the icon for the selected item changes to .
9. Tap .

Note

- Step 8 can be omitted if you do not want to assign a default number. (The first number entered for an entry will automatically be assigned as the default number.)
- The valid digits are "0" through "9", "✱", "#", "+", "P".
- If an item with the same name and number exists, the new information added will be merged with the existing item.
- To enter characters, see “Entering Characters”, Page 27.

Editing a stored item in the Personal Phonebook

Editing a Stored Item

[In standby mode]

1. Tap / → "Phonebook"
2. Tap .
3. Enter the name or the first character(s) of the desired name. → "OK"
4. Tap / : Select the desired name.
5. Tap .*1
6. Tap the desired name, phone number, category or default telephone number.
7. Edit the data as necessary.
8. Repeat steps 5 to 7 and edit the items you want to change.
9. Tap .

*1 If this icon is not displayed, you are currently viewing the Shared Phonebook. You must be viewing the Personal Phonebook to edit items. Contact your administrator for further information.

Note

- To change a character or digit, tap or to highlight it, tap to delete it, and then enter the new character or digit.
- To clear an entire line, tap "Delete".
- To move the cursor to the left or right, tap or respectively.
- For details about entering characters, see “Entering Characters”, Page 27.

Editing Category Names

You can edit the names of the categories in the phonebook.

[In standby mode]

1. Tap / → "Basic Settings"
2. Tap / → "Display Option"
3. Tap / → "Category Name"
4. Tap / : Select the desired category number (1–9).
5. Enter a name for the category (max. 13 characters). → "OK"
6. Repeat steps 4 and 5 for each category name to edit.

Note

For details about entering characters, see “Entering Characters”, Page 27.

Deleting a Stored Item in the Personal Phonebook

Deleting a Stored Item

[In standby mode]

1. Tap / → "Phonebook"
2. Tap .
3. Enter the name or the first character(s) of the desired name. → "OK"
4. Tap / : Select the desired name.
5. Tap .*1

6. Tap / : Tap the check boxes of the items you want to delete.*2
7. Tap → "OK"

*1 If this icon is not displayed, you are currently viewing the Shared Phonebook. You must be viewing the Personal Phonebook to edit items. Contact your administrator for further information.

*2 You can select all items in the list by tapping .

Searching for an Item in the Personal Phonebook

You can search for an item in the phonebook by following the steps below.

Searching by Name

You can also search for an item in the phonebook by entering a name:

[In standby mode]

1. Tap / → "Phonebook"
2. If "Shared Phonebook" is displayed as the title, tap .*1
3. Tap .
4. Enter the name or the first character(s) of the desired name. → "OK"
5. Tap / : Select the desired name.
6. Select the desired phone number.
7. To make a call, go off-hook.

*1 If only Personal Phonebook is permitted, this step is skipped.

Searching by Category

If items in the phonebook have been assigned categories, you can search by category.

[In standby mode]

1. Tap / → "Phonebook"
2. If "Shared Phonebook" is displayed as the title, tap .*1
3. Tap .
4. Tap / : Select a category.
5. Tap .
6. Enter the name or the first character(s) of the desired name. → "OK"
7. Tap / : Select the desired name.
8. Select the desired phone number.
9. To make a call, go off-hook.

*1 If only Personal Phonebook is permitted, this step is skipped.

Searching by pressing Dial Keys

You can also search for an item in the phonebook by pressing multiple dial keys when the phonebook list is displayed:

[When the phonebook is displayed]

1. Press the dial keys to enter the first character(s) of the desired name in accordance with the character tables.*1

*1 For details about the characters assigned to the dial keys, see the following table.

Suffix	NE/X/SX/C/(none)	NE/X/SX	RU
Keys	ABC (Latin)	ΑΒΓ (Greek)	АБВ (Cyrillic)
1	♯→✱→1	♯→✱→1	А→Б→В→♯→✱→1
2	A→B→C→2	Α→Β→Γ→2	Г→Д→Е→Ё→2→А→В→С→2
3	D→E→F→3	Δ→Ε→Ζ→3	Ж→З→И→Й→3→D→E→F→3
4	G→H→I→4	Η→Θ→Ι→4	К→Л→М→4→G→H→I→4
5	J→K→L→5	Κ→Λ→Μ→5	Н→О→П→5→J→K→L→5
6	M→N→O→6	Ν→Ξ→Ο→6	Р→С→Т→6→M→N→O→6
7	P→Q→R→S→7	Π→Ρ→Σ→7	У→Ф→Х→7→P→Q→R→S→7
8	T→U→V→8	Τ→Υ→Φ→8	Ц→Ч→Ш→8→T→U→V→8
9	W→X→Y→Z→9	Χ→Ψ→Ω→9	Щ→Ъ→Ы→Ь→9→W→X→Y→Z→9
0	0→Space	0→Space	Э→Ю→Я→0→Space

- Pressing a key repeatedly will cycle through the characters associated with that key. For example, to enter the letter "C" in Latin Mode, press 2 3 times.
- The illustrations of the keys in the table may differ in appearance from the actual keys on the telephone.

Example: To enter "ANNE" in Latin Mode.

2 → 6 → 6 → → 6 → 6 → 3 → 3

Note

- Availability depends on your phone system. Contact your administrator for further information.

Locking the Phonebook

You can lock/unlock the phonebook while in standby mode. If no password has been set, you cannot lock the phonebook. For details about setting the password, see “Setting the Password”, Page 27.

Note

- If you lock either the Personal Phonebook or the Shared Phonebook, the other one is also locked. If you unlock the phonebook, both phonebooks are unlocked.

Locking/Unlocking the Phonebook

[In standby mode]

To lock

1. Tap / → "Phonebook"
2. Press /[MENU].
3. Tap "Lock Phonebook". → "OK"*1

To unlock

1. Tap / → "Phonebook"
2. Enter your password.*2 → "OK"
3. Press /[MENU].
4. Tap "Unlock Phonebook". → "OK"
5. Enter your password.*2 → "OK"

Unlocking the Phonebook Temporarily

1. Tap / → "Phonebook"

2. Enter your password.*2 → "OK"

*1 The call log is also locked.
*2 If you enter an incorrect password 3 times, you cannot enter another password for approximately 30 seconds.

Using the Shared Phonebook

You can refer to the Shared Phonebook in addition to the Personal Phonebook, if the Shared Phonebook is available.

Note

We recommend setting this feature with your administrator. Contact your administrator for further information.

Searching for an Item in the Shared Phonebook

Searching by Name

[In standby mode]

1. Tap > / < → "Phonebook"
2. If "Phonebook" is displayed as the title, tap .*1
3. Tap .
4. Enter the name or the first character(s) of the desired name. → "OK"
5. Tap ^ / v : Select the desired name.
6. Select the desired phone number.
7. To make a call, go off-hook.

*1 If only Personal Phonebook is permitted, this step is skipped.

ECO Mode

Enabling this mode reduces the amount of electricity consumed by the unit.

Note

- When ECO mode is enabled, the "Link Speed" setting (Page 73) changes as follows:
  - Link Speed: "10M/Full"
  - PC port cannot be used
- When the ECO mode setting is changed, the unit will restart.
- When ECO mode is enabled, ECO is displayed in the status bar.

Setting ECO Mode

[In standby mode]

1. Tap > / < → "System Settings"
2. Tap "System Settings".
3. Tap ^ / v → "ECO Mode"
4. Tap "On".*1 → "OK"

*1 To disable ECO mode, select "Off" (default).

Checking the Line Status

You can check the status of each line (up to 12 lines) on the display.

Checking the Line Status

[In standby mode]

1. Tap > / < → "Line Status"
2. Tap ∧ / ∨ : Select the line whose status you want to check.
3. Press ⊗/[CANCEL] to end checking the line status or tap the line to perform an action. See "Line status indication" below for details.

[During a conversation]

1. Tap > / < → "Line Status"
2. Tap ∧ / ∨ : Select the line whose status you want to check.
3. Press ⊗/[CANCEL] to end checking the line status or tap the line to perform an action. See "Line status indication" below for details.

Note

- When a function key is assigned as a Line Status key, you can press that function key to display the line status screen. See "Line status indication" below for details.

Line status indication

Status Display	Meaning
Free*1	The line is idle. Action: seize the line for dialing.
In Use	The line is on a call. Action: none.
Line On Hold*2	The line is on hold. Action: retrieve the call on hold.
Incoming Call*2	The line is receiving a call. Action: answer the call.
Recall*2	The line is receiving a Hold Recall signal. Action: answer the call.
<x> In Use*3	A shared line is in use at another unit. Action: join the call.
<x> Line On Hold*3	A shared line is on hold at another unit. Action: retrieve the call on hold.

*1 The following icons are also displayed if the corresponding feature is enabled.

Icon	Meaning
	Call Forwarding
	Do Not Disturb
	Making an anonymous call
	Block anonymous calls

*2 When the line is in this state, call information is also displayed.
*3 If the shared line is set, <x> (index number) is also displayed. We recommend setting this with your administrator. Contact your administrator for further information.

Customizing the Telephone

Changing the Telephone's LCD Display

You can change what is displayed on the telephone's LCD while the telephone is in standby mode.

1. Tap > / < → "Basic Settings"
2. Tap ∧ / ∨ → "Display Option"
3. Tap ∧ / ∨ → "Standby Display"
4. Select the desired item. → "OK"

Hot Keys

By assigning phone numbers to dial keys, you can make a call by pressing and holding a dial key.

● "Hot Key Dialing", Page 31

Assigning Hot Keys From Phonebook

You can assign a phone number stored in the Personal Phonebook to a key to be used as a Hot Key.

1. In standby mode, press and hold a dial key (0–9) for more than 1 second.
2. Tap .
3. Tap .
4. Enter the desired name.
5. Tap ∧ / ∨ : Select the desired name.
6. Select a desired phone number.
7. Tap .

Note

- For details about searching for an item in the phonebook, see "Searching for an Item in the Personal Phonebook", Page 45.

Editing Hot Keys

1. In standby mode, press and hold a dial key (0–9) for more than 1 second.
2. Tap .
3. Tap "Name", if necessary.
4. Edit the name. → "OK"
5. Tap "Phone Number", if necessary.
6. Edit the phone number. → "OK"
7. Tap .

Deleting a Hot Key

1. In standby mode, press and hold the dialing key assigned as a Hot Key for more than 1 second.*1
2. Tap .
3. Tap the check boxes of the items you want to delete.*2
4. Tap . → "OK"

*1 While the Hot Key's information is displayed, you can tap ∧ or ∨ to select another Hot Key number.

*2 You can select all items in the list by tapping .

Selecting the Type of Hot Key Dialing

You can select one of 2 types of Hot Key Dialing for each assigned Hot Key.

1. In standby mode, press and hold a dial key (0–9) for more than 1 second.
2. Tap .
3. Tap "Automatic Call".
4. Select "Manual" or "Auto". → "OK"
   - Manual:
     Press and hold the dialing key (0–9) assigned as a Hot Key for more than 1 second, and then go off-hook. For details, see "Hot Key Dialing", Page 31.
   - Auto:
     Pressing and holding an assigned Hot Key for the set number of seconds will dial that Hot Key's assigned number immediately.

Note

- To select the number of seconds before the call is automatically made, see "Hot Key Time" in "Key Option", Page 68.

Changing the Function Keys (Program Keys and DSS Keys)

[In standby mode]

1. Tap / → "Basic Settings"
2. Tap / → "Key Option"
3. Tap "Program Key".*1
4. Tap / : Select the key to change.
5. Tap "Function".
6. Tap / : Select the new item to assign. → "OK"
7. Specify additional settings, such as "Line", "Label" and "Phone Number" as necessary.
8. Tap .

*1 To assign functions to the DSS keys on a KX-HDV20, tap "DSS Key". You can also assign a function by pressing the desired DSS key for 3 or more seconds.

Note

- In addition to the Line function, other functions can be assigned to individual lines. However, only lines that have been set up in advance can be selected.

Each of the function keys can be assigned one of the following functions.

- One Touch Dial
  Used to dial a previously set phone number with one touch.
- BLF (Busy Lamp Field)
  Used to transfer calls to the extension assigned to the key while receiving an incoming call or during a conversation. The indicator of a BLF key also shows the current status of the extension assigned to the key.

Status		Meaning
Color	Light pattern	
Red	Off	Available
	On	Unavailable
	Quick Flashing	Ringing

Status		Meaning
Color	Light pattern	
Blue	On	Call Park

Note

- More than 48 BLF keys can be programmed, but status indication is available only up to 48 keys.

- Line
  Used to seize a line in order to make or receive a call. The color of each key's indicator shows the status of the line.

Status		Meaning
Color	Light pattern	
Blue	On	In Use ● You are on a call.
	Slow Flashing	"Line On Hold" ● A call is on hold.
	Quick Flashing	"Incoming Call" or "Recall" ● A call (including Hold Recall) is being received. Name or number of caller ● A call to a shared line is being received.
Red	On	In Use ● A shared line is in use or a call is on private hold at another unit.
	Slow Flashing	"Line On Hold" ● A shared line is on hold at another unit.
Off	—	Free ● The line is idle.

- ACD[Login]/ACD[Wrap Up][*1]
  ACD[Login]: Used to log in/log out of an Automatic Call Distribution Group.
  ACD[Wrap Up]: Used to change the phone's status from unavailable → wrap up → available.
  The color of each key's indicator shows the status of the key.

Status		Meaning	
Color	Light pattern	ACD[Login]	ACD[Wrap Up]
Red	Off	Logged In	Available
	On	Logged Out	Unavailable
	Slow Flashing	—	Wrap Up

- Line Status
  Used to confirm the status of each line. This allows the function key to work as a Line key such as seizing a line in order to make or receive a call.
- Call Forward
  Used to forward incoming calls to the extension assigned to the key.
- Phonebook[*2]
  Used to open the phonebook.
- Call History[*2]
  Used to open the Incoming/Outgoing Call Log.

- Simultaneous Ring*1
  Enables parallel ringing. Up to 10 locations can be specified to ring simultaneously when you receive a call.

Status		Meaning
Color	Light pattern	
Blue	On	Simultaneous Ring feature: On
	Off	Simultaneous Ring feature: Off

- Hoteling/Hospitality*1
  Used to log in/log out of the Call Center Hoteling Event.
- Transfer*1
  Used to transfer a call to the extension assigned to the key with confirmation during a conversation.
- Blind Transfer*1
  Used to transfer a call to the extension assigned to the key without confirmation during a conversation.
- Conference
  Used to establish a multiple-party conversation (conference).
- Directed Call Pickup*1
  Used to answer an incoming call arriving at the specified telephone number.
- Call Park/Park Retrieve*1
  Used to park a call or to retrieve a parked call (Call Parking).

*1 This item can be used only when the feature is enabled. Contact your administrator for further information.
*2 This item can be selected when the list is registered on the telephone. Contact your administrator for further information.

Block anonymous calls

This feature allows the unit to reject calls when the unit receives a call without phone number. The default setting is "Off".

IMPORTANT

- A password may be required for these settings. We recommend setting with your administrator. Contact your administrator for further information.
- This feature is not available on shared lines.

[In standby mode]

1. Tap > / < → "Advanced Settings"
2. Tap ∧ / ∨ → "Call Settings"
3. Tap ∧ / ∨ → "Block Anonymous"
4. Tap ∧ / ∨ : Select a desired line.
5. Select "On" or "Off". → "OK"

Incoming call barring (Caller ID service users only)

This feature allows the unit to reject calls from specified phone numbers that you do not want to answer such as junk calls.
When a call is received, the unit does not ring while the caller is being identified. If the phone number matches an entry in the call barred list, the unit rejects the call.

IMPORTANT

- A password may be required for these settings. We recommend setting with your administrator. Contact your administrator for further information.

Storing unwanted callers

You can store up to 30 phone numbers in the call barred list by using the caller list or by entering the numbers directly.

[In standby mode]

1. Tap > / < → "Advanced Settings"
2. Tap ∧ / ∨ → "Call Settings"
3. Tap ∧ / ∨ → "Block Caller ID"
4. Tap ∧ / ∨ : Select a blank line.
5. Enter the phone number (32 digits max.). → "OK"

Editing the phone numbers to reject

[In standby mode]

1. Tap > / < → "Advanced Settings"
2. Tap ∧ / ∨ → "Call Settings"
3. Tap ∧ / ∨ → "Block Caller ID"
4. Tap ∧ / ∨ : Select a desired phone number.
5. Edit the phone number. → "OK"

Deleting the phone numbers to reject

[In standby mode]

1. Tap > / < → "Advanced Settings"
2. Tap ∧ / ∨ → "Call Settings"
3. Tap ∧ / ∨ → "Block Caller ID"
4. Tap 🗑.
5. Tap ∧ / ∨ : Tap the check boxes of the items you want to delete.*1
6. Tap 🗑. → "OK"

*1 You can select all items in the list by tapping ☑.

Making an anonymous call

Before making a call, specify the following:

IMPORTANT

- A password may be required for these settings. We recommend setting with your administrator. Contact your administrator for further information.

[In standby mode]

1. Tap > / < → "Advanced Settings"
2. Tap ∧ / ∨ → "Call Settings"
3. Tap ∧ / ∨ → "Anonymous Call"

4. Tap ⌃ / ⌄ : Select a line.
5. Select "On" or "Off". → "OK"

Changing the Basic Settings

To select the main item in standby mode

1. Tap ❯ / ❮ → "Basic Settings"
2. Tap ⌃ / ⌄ : Select the main item.

Main Item	Sub Item			Page
Incoming Option	Ringer Volume	Ringer Type		Page 67
Talk Option	Speaker Volume	Handset Volume	Headset Volume	Page 68
Answer Option	Auto Ans Device	Auto Ans Delay		Page 68
Key Option	Program Key	DSS Key	Hot Key Time	Page 68
Display Option	Language	Backlight	Standby Display	Page 69
	Category Name	Date Format	Time Format	
	Screen Saver	DSS Control		
Key Tone	—			Page 70
Bluetooth Headset	Connection	Registration		Page 70
Other Option	Change Password	Embedded Web		Page 70

Changing the System Settings

IMPORTANT

- The feature depends on your phone system. Contact your administrator for further information.

To select the main item in standby mode

1. Tap ❯ / ❮ → "System Settings"
2. Tap ⌃ / ⌄ : Select the main item.

Main Item	Sub Item			Page
Status	Line Status	Firmware Version	IP Mode	Page 71
	IPv4 Settings	IPv6 Settings	MAC Address	
	LLDP	VLAN		
Network Settings	IP Mode Select	IPv4 Settings	IPv6 Settings	Page 71
	LLDP	VLAN	Link Speed	
System Settings	Set Time & Date*1	Authentication	Access Code	Page 73
	ECO Mode	Restart	DSS Restart	

*1 Availability depends on your phone system. Contact your administrator for further information.

Changing the Advanced Settings

To select the main item in standby mode

1. Tap ❯ / ❮ → "Advanced Settings"

2. Select the main item.

Main Item	Sub Item			Page
Xsi Setting*1	—			Page 73
UC Setting*1	—			Page 74
Call Settings*2	Block Anonymous	Anonymous Call	Block Caller ID	Page 74
	Anywhere*1	Remote Office*1	SimultaneousRing*1	
	System Lock			
Executive Filtering*1	—			Page 75
Assistant Settings*1	Assistant Filtering	Divert Setting		Page 75

*1 This item is displayed only when the feature is enabled. Contact your administrator for further information.
*2 A password may be required for these settings.

Web User Interface Programming

The product provides a Web-based interface for configuring various settings and features, including some that are not programmable directly. The following list contains some useful features that are programmable through the Web user interface.
Contact your administrator for further information.

- Language Settings (IP Phone/Web)
- User Password (for access to Web user interface)
- Default Line for Outgoing
- Call Rejection Phone Numbers
- Call Features
  - Enable Anonymous Call
  - Enable Block Anonymous Call
  - Enable Do Not Disturb
  - Enable Call Forwarding Always
  - Forwarding Number (Always)
  - Enable Call Forwarding Busy
  - Forwarding Number (Busy)
  - Enable Call Forwarding No Answer
  - Forwarding Number (No Answer)
  - Ring Counts (No Answer)
- Hotline Number
- Flexible Key Setting
- Phonebook Import and Export
- DSS Console

Note

- Each time you want to access the Web user interface, you must enable Web programming (Embedded Web). See “Other Option”, Page 70.

Installation and Setup

Note

- Panasonic assumes no responsibility for injuries or property damage resulting from failures arising out of improper installation or operation inconsistent with this documentation.

WARNING

- To reduce the risk of fire or electric shock, do not overload AC outlets and extension cords.
- Completely insert the AC adaptor/power plug into the AC outlet. Failure to do so may cause electric shock and/or excessive heat resulting in a fire.
- Regularly remove any dust, etc. from the AC adaptor/power plug by pulling it from the power outlet, then wiping with a dry cloth. Accumulated dust may cause an insulation defect from moisture, etc. resulting in a fire.

Attaching the Stand

Attach the stand to the desk phone.

1. Insert the stand into the slots located in the unit.
2. Gently rotate the stand in the direction indicated until it is fixed.

KX-HDV330 stand

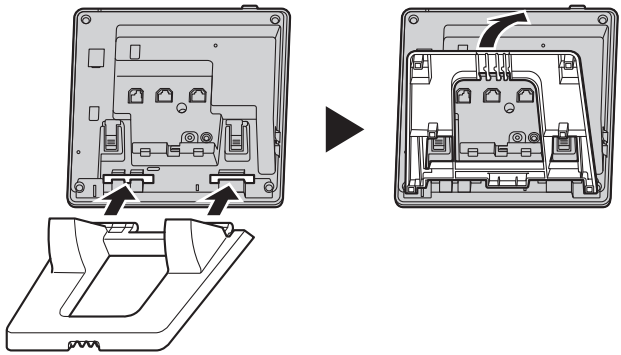

KX-HDV20 (option) stand

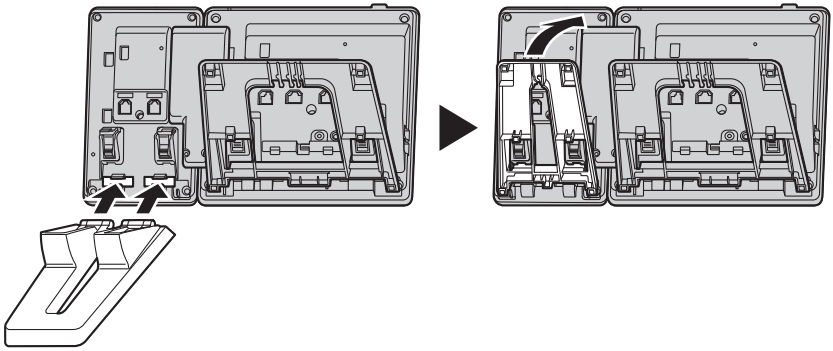

Adjusting the Stand Position

Push the PUSH marks in the direction indicated, with both hands, and tilt and slide the stand until it becomes fixed in the desired position.

- Lowering the stand

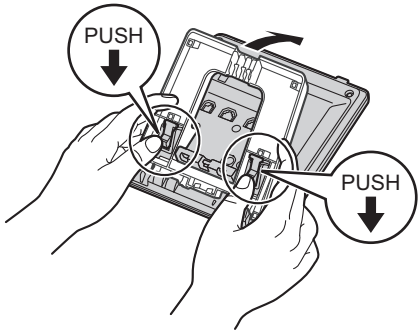

- Raising the stand

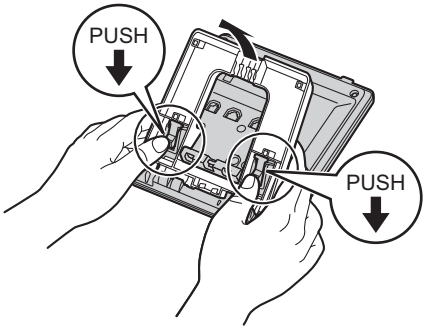

Removing the Stand

Tilt the stand in the direction indicated while pushing the PUSH marks with both hands.

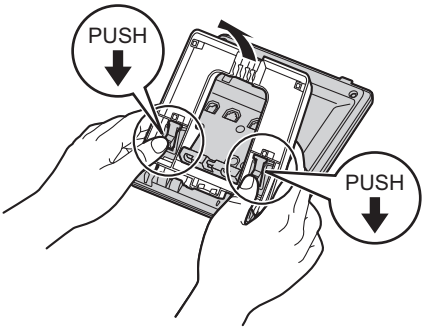

Attaching the Optional KX-HDV20 to the Unit

The optional KX-HDV20 has 20 DSS keys, and it adds 40 function keys (20 keys × 2 pages) to the unit. These keys can be used to seize a line to make or receive a call or to perform a feature that has been assigned to the key.

1. Remove the stand from both the KX-HDV330 and KX-HDV20. See "Removing the Stand", Page 59.
2. Insert the tabs of the KX-HDV20 into the designated openings in the base, and then slide the KX-HDV20 in the direction of the arrow.
3. Fasten the KX-HDV20 to the unit with the included screw.
4. Attach the stand to both the KX-HDV330 and the KX-HDV20. See "Attaching the Stand", Page 57. Or, if the unit will be mounted on a wall, perform wall mounting. See "Wall Mounting", Page 62.
5. Connect the KX-HDV20 to the unit with the included cable. See "Connections (including optional KX-HDV20)", Page 60.
6. Turn on the KX-HDV330.

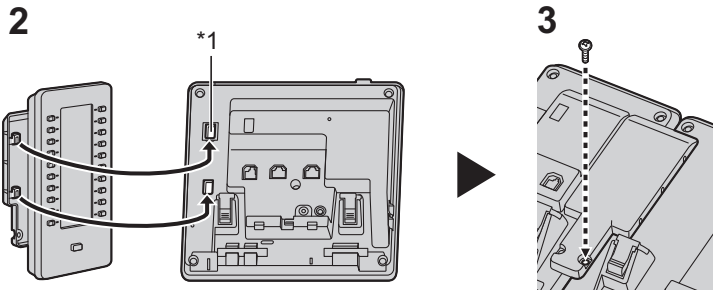

*1 Remove the hole cover.

Note

- Up to 5 KX-HDV20 units can be connected to the product. However, if you mount the product on a wall, only one KX-HDV20 unit can be used.

Connections (including optional KX-HDV20)

Connect the Ethernet cable, the Handset Cord and the AC adaptor (Option) to the unit.

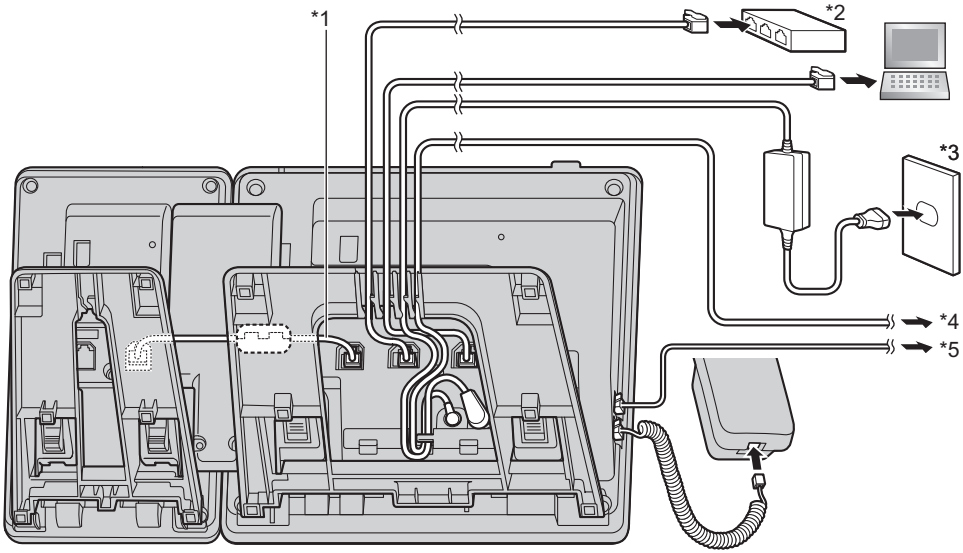

*1 Connection cable
Connect the connection cable as shown in the illustration.
*2 PoE HUB
*3 Optional AC adaptor
*4 Optional EHS headset
For up-to-date information about EHS headsets that have been tested with this unit, refer to the following web site:
http://www.panasonic.net/pcc/support/sipphone/

*5 Optional headset
For up-to-date information about headsets that have been tested with this unit, refer to the following web site:
http://www.panasonic.net/pcc/support/sipphone/

- The initial setting for the IP address is "DHCP—Auto". For information about your network environment, contact your administrator. For details, see “Network Settings”, Page 71.

When selecting Ethernet cables (not included)

- Use flexible cables without jack covers. Do not use cables with a hard coating that may tear or crack when bent.
  To prevent damage to the cables, use cables that do not protrude from the bottom of the base.
  Connect the cables as shown in the following illustration.

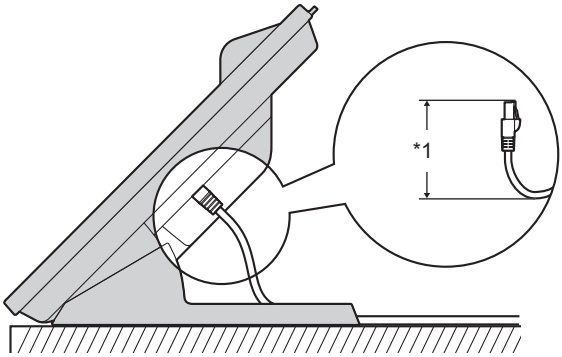

*1 60 mm (2 3/8 in) or less

- Use a straight CAT 5e (or higher) Ethernet cable (not included) that is 6.5 mm (1/4 in) in diameter or less.

When connecting to a switching hub

- If PoE is available, an AC adaptor is not needed.
- This unit complies with the PoE Class 2 standard.

When connecting a PC

- The PC port does not support PoE for connected devices.

When connecting cables and the AC adaptor

- Pass the Ethernet cable and the AC adaptor cord under the stand.

Wall Mounting

The KX-HDV330 and up to 5 optional KX-HDV20 units can be mounted on a wall.

IMPORTANT

- Make sure that the wall and the fixing method are strong enough to support the weight of the unit. (See “Specifications”, Page 76.)

1. Insert the tabs of the wall mounting adaptor into the designated openings in the base, and then slide the wall mounting adaptor in the direction of the arrow until it clicks.
   KX-HDV330

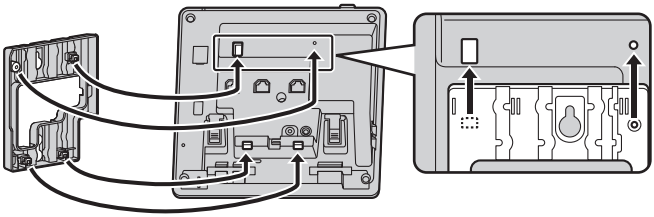

With optional KX-HDV20

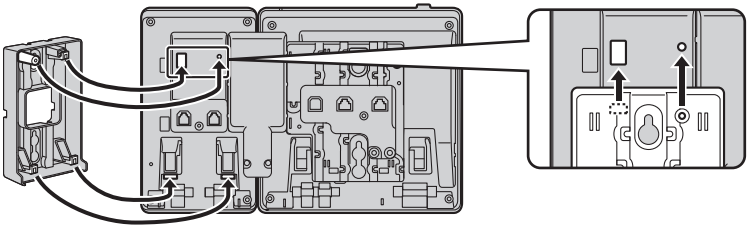

For 2nd to 5th KX-HDV20
Remove the screw from the DSS cover of the KX-HDV20, and then slide the cover up to remove it.

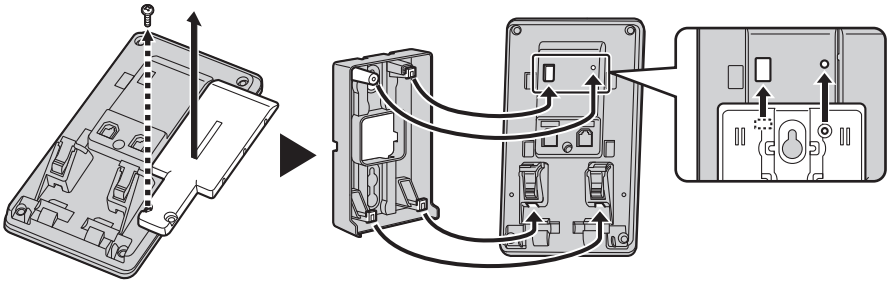

2. Fasten the wall mounting adaptor to the base with the included small screw.
   (Recommended torque: 0.4 N·m [4.08 kgf·cm/3.54 lbf·in] to 0.6 N·m [6.12 kgf·cm/5.31 lbf·in])
3. Connect the AC adaptor, handset cord, Ethernet cables, and connection cable as necessary.
4. Drive the large screws into the wall either 83 mm (3 1/4 in) or 100 mm (3 15/16 in) apart, and mount the unit on the wall.

KX-HDV330

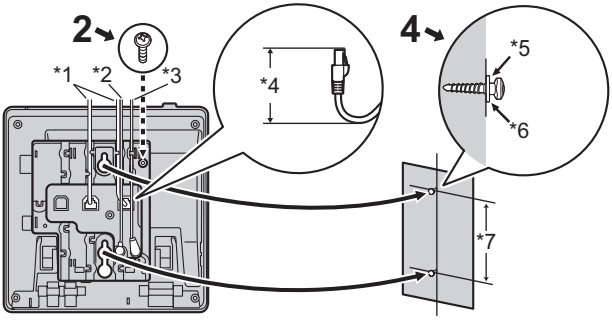

With optional KX-HDV20

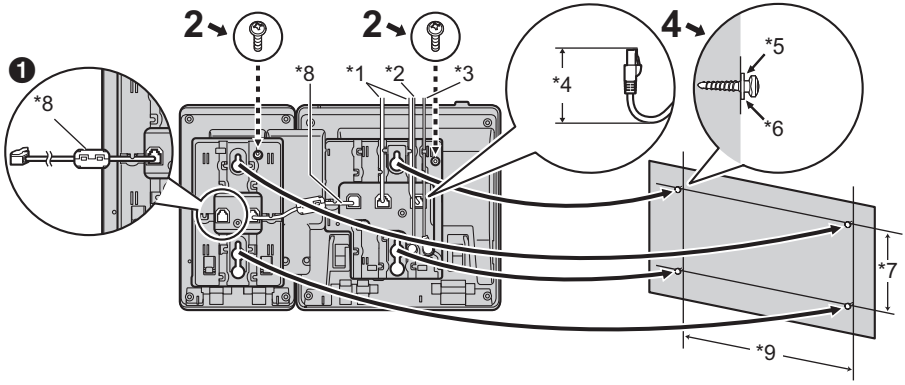

❶ If you will mount additional KX-HDV20 units, connect the connection cable for the next unit to the unit you are attaching.

For 2nd to 5th KX-HDV20

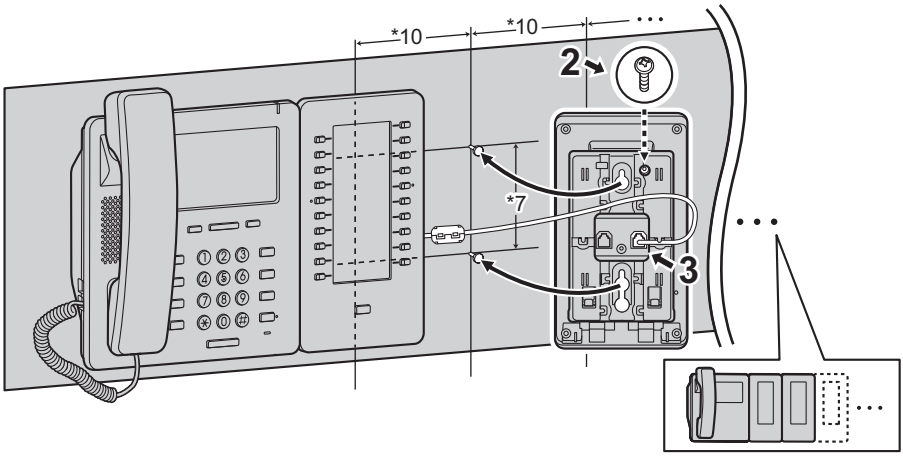

*1 Ethernet cables

*2 EHS headset cable
*3 AC adaptor
*4 40 mm (1 37/64 in) or less
*5 Washer
*6 Drive the screw to this point
*7 83 mm (3 1/4 in) or 100 mm (3 15/16 in)
*8 Connection cable
Connect the connection cable as shown in the illustration.
*9 152 mm (6 in)
*10 111 mm (4 3/8 in)

- You can find a wall mounting template at the end of this manual.

Hooking the Handset

To Hook the Handset During a Conversation

1. Hook the handset over the top edge of the unit.

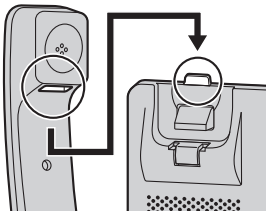

To Lock the Handset Hook when the Unit is Wall Mounted

1. Remove the handset hook from the slot.
2. Turn it up-side-down.
3. Slide the handset hook back into the slot until it locks.
4. Handset is safely hooked when it is in the cradle.

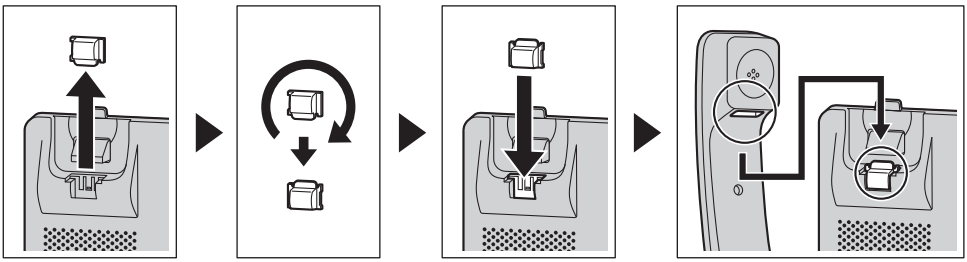

Updating the software

Your phone system dealer may offer new features and improve its software version from time to time. Contact your administrator for further information.

Appendix

Character Mode Table

KX-HDV330 (Suffix: NE/X/SX)

Keys	ABC (Latin)	0–9 (Numeric)	ΑΒΓ (Greek)	AÄÅ (Extended 1)	SŚŠ (Extended 2)
1	Space # & ' ( ) * , – . / 1	1	Space # & ' ( ) * , – . / 1		
2	A B C 2	2	A B Γ 2	A À Á Â Ã Ä Å Æ B C Ç 2	A Á Ä Ă Ą B C Ć Č 2
	a b c 2		α β γ 2	a à á â ã ä å æ b c ç 2	a á ä ă ą b c ć č 2
3	D E F 3	3	Δ E Z 3	D Đ E È É Ê Ë Ẽ F 3	D Ď E É Ę Ě F 3
	d e f 3		δ ε ζ 3	d đ e è é ê ë ẽ f 3	d ď e é ę ě f 3
4	G H I 4	4	Η Θ Ι 4	G Ğ H I Ì Í Î Ï Ĩ Ī Ĭ 4	G H I Í 4
	g h i 4		η θ ι 4	g ğ h i ì í î ï ĩ ī ĭ 4	g h i í 4
5	J K L 5	5	Κ Λ Μ 5	J K L 5	J K L Ł Ĺ Ľ 5
	j k l 5		κ λ μ 5	j k l 5	j k l ł ĺ ľ 5
6	M N O 6	6	Ν Ξ Ο 6	M N Ñ O Ò Ó Ô Õ Ö ø Œ 6	M N Ń Ň O Ó Ö Ő 6
	m n o 6		ν ξ ο 6	m n ñ o ò ó ô õ ö ø œ 6	m n ń ň o ó ö ő 6
7	P Q R S 7	7	Π Ρ Σ 7	P Q R S Ş ß 7	P Q R Ŕ Ř S Ś Š 7
	p q r s 7		π ρ σ 7	p q r s ş ß 7	p q r ŕ ř s ś š 7
8	T U V 8	8	Τ Υ Φ 8	T U Ù Ú Û Ü Ũ V 8	T Ţ Ť U Ú Ü Ŭ Ů V 8
	t u v 8		τ υ φ 8	t u ù ú û ü ũ v 8	t ţ ť u ú ü ŭ ů v 8
9	W X Y Z 9	9	Χ Ψ Ω Ϋ 9	W Ŵ X Y Ŷ Z 9	W X Y Ỳ Ý Z Ź Ż Ž 9
	w x y z 9		χ ψ ω ϋ 9	w ŵ x y ŷ z 9	w x y ỳ ý z ź ż ž 9
0	Space ! ? " : ; + = < > 0	0	Space ! ? " : ; + = < > 0		
#	$ % & @ € £	#	$ % & @ € £		

- Press * before or after entering a character to change between uppercase and lowercase.
- Pressing a key repeatedly will cycle through the characters associated with that key. For example, to enter the letter "C" in Latin Mode, press 2 3 times.
- Characters that are entered using the # key (for example, "$") cannot be entered when searching the phonebook. See "Searching for an Item in the Personal Phonebook", Page 45.

- The illustrations of the keys in the table may differ in appearance from the actual keys on the telephone.

KX-HDV330 (Suffix: RU)

Keys	АБВ (Cyrillic)	0–9 (Numeric)	ABC (Latin)	AÄÅ (Extended 1)	SŚŠ (Extended 2)
1	А Б В Space ✳ + - / = < > 1	1	Space # & ' ( ) ✳, – . / 1		
	а б в Space ✳ + - / = < > 1				
2	Г Д Е Ё 2	2	A B C 2	A À Á Â Ã Ä Å Æ B C Ç 2	A Á Ä Ă Ą B C Ć Č 2
	г д е ё 2		a b c 2	a à á â ã ä å æ b c ç 2	a á ä ă ą b c ć č 2
3	Ж З И Й 3	3	D E F 3	D Đ E È É Ê Ë Ẽ F 3	D Ď E É Ę Ě F 3
	ж з и й 3		d e f 3	d đ e è é ê ë ẽ f 3	d ď e é ę ě f 3
4	К Л М 4	4	G H I 4	G Ğ H I Ì Í Î Ï Ĩ İ Ĭ 4	G H I Í 4
	к л м 4		g h i 4	g ğ h i ì í î ï ĩ ı ĭ 4	g h i í 4
5	Н О П 5	5	J K L 5	J K L 5	J K L Ł Ĺ Ľ 5
	н о п 5		j k l 5	j k l 5	j k l ł ĺ ľ 5
6	Р С Т 6	6	M N O 6	M N Ñ O Ò Ó Ô Õ Ö ø Œ 6	M N Ń Ň O Ó Ö Ő 6
	р с т 6		m n o 6	m n ñ o ò ó ô õ ö ø œ 6	m n ń ň o ó ö ő 6
7	У Ф Х 7	7	P Q R S 7	P Q R S Ş ß 7	P Q R Ŕ Ř S Ś Š 7
	у ф х 7		p q r s 7	p q r s ş ß 7	p q r ŕ ř s ś š 7
8	Ц Ч Ш 8	8	T U V 8	T U Ù Ú Û Ü Ũ V 8	T Ţ Ť U Ú Ü Ű Ů V 8
	ц ч ш 8		t u v 8	t u ù ú û ü ũ v 8	t ţ ť u ú ü ű ů v 8
9	Щ Ъ Ы Ь Space ! ? " 9	9	W X Y Z 9	W Ŵ X Y Ŷ Z 9	W X Y Ỳ Ý Z Ź Ż Ž 9
	щ ъ ы ь Space ! ? " 9		w x y z 9	w ŵ x y ŷ z 9	w x y ỳ ý z ź ż ž 9
0	Э Ю Я Space . , ' : ; ( ) 0	0	Space ! ? " : ; + = < > 0		
	э ю я Space . , ' : ; ( ) 0				
#	$ % & @ € £ Ґ Є І Ї Ў #	#	$ % & @ € £		
	$ % & @ € £ ґ є і ї ў #				

- Press ✱ before or after entering a character to change between uppercase and lowercase.
- Pressing a key repeatedly will cycle through the characters associated with that key. For example, to enter the letter "C" in Latin Mode, press 2 3 times.
- Pressing a key repeatedly will cycle through the characters associated with that key. For example, to enter the letter "E" in Cyrillic Mode, press 2 3 times.
- Characters that are entered using the # key (for example, "$") cannot be entered when searching the phonebook. See "Searching for an Item in the Personal Phonebook", Page 45.
- The illustrations of the keys in the table may differ in appearance from the actual keys on the telephone.

KX-HDV330 (Suffix: [none]/C)

Keys	ABC (Latin)		0–9 (Numeric)	+ÀÂ (Extended 1)	
	Upper	Lower		Upper	Lower
1	Space # & ' ( ) * , – . / 1		1	Space # & ' ( ) * , – . / 1	
2	A B C 2	a b c 2	2	A À Á Â Ã Ä Å Æ B C Ç 2	a à á â ã ä å æ b c ç 2
3	D E F 3	d e f 3	3	D Ð E È É Ê Ë Ẽ F 3	d ð e è é ê ë ẽ f 3
4	G H I 4	g h i 4	4	G Ğ H I Ì Í Î Ï Ĩ İ Ĭ 4	g ğ h i ì í î ï ĩ ı ĭ 4
5	J K L 5	j k l 5	5	JKL5	jkl5
6	M N O 6	m n o 6	6	M N Ñ O Ò Ó Ô Õ Ö ø Œ 6	m n ñ o ò ó ô õ ö ø œ 6
7	P Q R S 7	p q r s 7	7	P Q R S Ş ß 7	p q r s ş ß 7
8	T U V 8	t u v 8	8	T U Ù Ú Û Ü Ũ V 8	t u ù ú û ü ũ v 8
9	W X Y Z 9	w x y z 9	9	W Ŵ X Y Ŷ Z 9	w ŵ x y ŷ z 9
0	Space ! ? " : ; + = < > 0		0	Space ! ? " : ; + = < > 0	
#	$ % & @ € £		#	$ % & @ € £	

- Press ✱ before or after entering a character to change between uppercase and lowercase.
- Pressing a key repeatedly will cycle through the characters associated with that key. For example, to enter the letter "C" in Latin Mode, press 2 3 times.
- Characters that are entered using the # key (for example, "$") cannot be entered when searching the phonebook. See "Searching for an Item in the Personal Phonebook", Page 45.
- The illustrations of the keys in the table may differ in appearance from the actual keys on the telephone.

Basic Settings Menu Layout

Incoming Option

Sub Item	Description	Setting	Default
Ringer Volume	Adjusts the ringer volume	☐ Level 1–8 ☐ Off	Level 5
Ringer Type ● Line 1–12 ● Private Ring (Category 1–9)	Ringer Pattern Selects the ringtone for each type of call.*1	☐ Ringtone 1–32	Ringtone 1*2

*1 The preset melodies in this product are used with permission of © 2010 Copyrights Vision Inc.
*2 The default ringtone is different depending on the line number.

Talk Option

Sub Item	Description	Setting	Default
Speaker Volume	Adjusts the speaker volume.	Level 1–8	Level 5
Handset Volume	Adjusts the handset volume.	Level 1–8	Level 5
Headset Volume	Adjusts the headset speaker volume.	Level 1–8	Level 5

Answer Option

Sub Item	Description	Setting	Default
Auto Ans Device	Selects the types of devices that can be answered by Auto Answer.	☐ Speaker Phone ☐ Headset	Speaker Phone
Auto Ans Delay	Selects the number of seconds before a call is automatically answered when Auto Answer is turned on.	0s–20s	6s

Key Option

Sub Item	Description	Setting	Default
● Program Key ● DSS Key	Assigns a function to each program key or DSS key.	☐ One Touch Dial ☐ BLF ☐ Line ☐ ACD[Login]*1 ☐ ACD[Wrap Up]*1 ☐ Line Status ☐ Call Forward ☐ Phonebook ☐ Call History ☐ Simultaneous Ring*1 ☐ Hoteling/Hospitality*1 ☐ Transfer*1 ☐ Blind Transfer*1 ☐ Conference ☐ Directed Call Pickup*1 ☐ Call Park*1 ☐ Park Retrieve*1	Not stored
Hot Key Time	Selects the number of seconds before a call is automatically made when a Hot Key assigned to "Auto" is pressed and held.	1s–20s	2s

*1 Displayed only when configured on the telephone.

Display Option

Sub Item	Description	Setting	Default
Language	Selects the display language. Up to 10 languages can be downloaded from the server or Web as necessary. Contact your administrator for further information.	**Suffix: NE/X/SX** ☐ Auto ☐ English ☐ Deutsch ☐ Español ☐ FRANÇAIS ☐ Italiano ☐ Svenska ☐ Nederlands ☐ Português ☐ Čeština	Auto
		Suffix: (none)/C ☐ Auto ☐ English ☐ Español ☐ FRANÇAIS	Auto
		Suffix: RU ☐ Auto ☐ English ☐ РУССКИЙ ☐ Українська	Auto
Backlight	Selects the length of time before the backlight turns off after returning to the standby display, the level of the backlight when it's active, and the level of the backlight when it's inactive.	Screen Timeout ☐ 30 sec. ☐ 1 min. ☐ 5 min. ☐ 10 min. ☐ 30 min. ☐ 60 min. ☐ 120 min. ☐ 180 min. ☐ 300 min. ☐ Always On Active Level Level 1–8 Inactive Level ☐ Low ☐ Off	Screen Timeout: 1 min. Active Level: Level 8 Inactive Level: Off
Standby Display	Selects what is shown on the display while in standby mode.	☐ Phone Number ☐ Phone No&Name ☐ Off	Phone Number
Category Name	Edits the names of the categories.	Max. 13 characters x Category (1–9)	Not stored

Sub Item	Description	Setting	Default
Date Format	Selects the format for the date shown on the display in standby mode.	☐ DD-MM-YYYY ☐ MM-DD-YYYY	**Suffix: NE/X/SX/RU** DD-MM-YYYY **Suffix: (none)/C** MM-DD-YYYY
Time Format	Selects the format for the time shown on the display in standby mode.	☐ 12H ☐ 24H	**Suffix: NE/X/SX/RU** 24H **Suffix: (none)/C** 12H
Screen Saver	Selects the length of time before the screen saver activates.	☐ Off ☐ 10 sec. ☐ 30 sec. ☐ 1 min. ☐ 3 min. ☐ 5 min.	Off
DSS Control	Adjusts the backlight and LCD contrast of connected KX-HDV20 units.	Backlight ☐ Auto ☐ On Level 1–6 ☐ Off LCD Contrast Level 1–6	Backlight: Auto Level 6 LCD Contrast: Level 3

Key Tone

Sub Item	Description	Setting	Default
Key Tone	Turns the key tone on or off.	☐ On ☐ Off	On

Bluetooth Headset

Sub Item	Description	Setting	Default
Bluetooth Headset	Registers and deregisters a Bluetooth headset.	Refer to “Bluetooth Headset”, Page 28.	Not registered

Other Option

Sub Item	Description	Setting	Default
Change Password*1*2	Changes the telephone password (4 digits) used for unlocking the phonebook.	Enter Old Password.*3*4 ↓ Enter New Password. ↓ Verify New Password.	Not registered
Embedded Web	Selects whether the web function and the logging function are available or not.	☐ On ☐ Off	Off

*1 To avoid unauthorized access to this product:

- Set a password that is random and cannot be easily guessed.
- Change the password regularly.

*2 Make a note of the password so that you will not forget it.
*3 If a password has not already been set, you can skip the first step.
*4 For details about setting the password, see "Setting the Password", Page 27.

System Settings Menu Layout

Status

Sub Item	Description	Status
Line Status	Displays the line status.	Line 1–12 Registered/Registering/(NULL)
Firmware Version	Displays the firmware version of the telephone.	—
IP Mode	Displays the IP network mode.	IPv4/IPv6/IPv4&IPv6
IPv4 Settings	Displays information about IPv4 settings.	–IP Address*1 –Subnet Mask*1 –Default Gateway*1 –DNS 1*1 –DNS 2*1
IPv6 Settings	Displays information about IPv6 settings.	–IP Address*2 –Prefix*2 –Default Gateway*2 –DNS 1*2 –DNS 2*2
MAC Address	Displays the MAC address of the telephone.	—
LLDP	Displays the LLDP status.	On/Off
VLAN	Displays the VLAN ID and priority.	—

*1 If this item is not set, "0.0.0.0" is displayed. If the telephone is not connected to the network, "…" is displayed.
*2 If this item is not set, "0::0" is displayed. If the telephone is not connected to the network, "::" is displayed.

Network Settings

Sub Item	Description	Setting	Default
IP Mode Select	Changes the network settings of the telephone. Current settings are displayed as a highlight.	☐ IPv4 ☐ IPv6 ☐ IPv4&IPv6	IPv4

Sub Item	Description	Setting	Default
IPv4 Settings	Specifies the IPv4 settings.	Connection Mode ☐ DHCP DNS ☐ Auto ☐ Manual –DNS 1 –DNS 2 ☐ Static –IP Address –Subnet Mask –Default Gateway –DNS 1 –DNS 2	Connection Mode: DHCP DNS: Auto
IPv6 Settings	Specifies the IPv6 settings.	Connection Mode ☐ DHCP DNS ☐ Auto ☐ Manual –DNS 1 –DNS 2 ☐ RA –DNS 1 –DNS 2 ☐ Static –IP Address –Prefix –Default Gateway –DNS 1 –DNS 2	Connection Mode: DHCP DNS: Auto
LLDP	Specifies the LLDP settings.	☐ PC Port –VLAN ID –Priority ☐ On/Off ☐ On ☐ Off	PC Port: VLAN ID: 0 Priority: 0 LLDP: On
VLAN	Specifies the VLAN settings.	☐ Enable VLAN ☐ Yes ☐ No ☐ IP Phone –VLAN ID –Priority ☐ PC –VLAN ID –Priority	Enable VLAN: No IP Phone: VLAN ID: 2 Priority: 7 PC: VLAN ID: 1 Priority: 0

Sub Item	Description	Setting	Default
Link Speed	Specifies the Ethernet PHY mode settings.	☐ IP Phone ☐ Auto ☐ 100M/Full ☐ 100M/Half ☐ 10M/Full ☐ 10M/Half ☐ PC ☐ Auto ☐ 100M/Full ☐ 100M/Half ☐ 10M/Full ☐ 10M/Half	Auto

System Settings

Sub Item	Description	Setting	Default
Set Time & Date*1	Specifies the time and date of the telephone.	–Date –Time	—
Authentication	Specifies the ID and password for HTTP authentication.	–ID*2 –Password*2	Not stored
Access Code*3	Specifies the access code to access the redirect server.	Max. 16 characters	Not stored
ECO Mode	Selects whether to enable ECO mode.	☐ On ☐ Off	Off
Restart*4	Restart the unit.	—	—
DSS Restart*4	Restart any connected DSS units.	—	—

*1 Availability depends on your phone system. Contact your administrator for further information.
*2 Max. 128 characters
*3 This item is displayed only during initial setup.
*4 The unit will restart even if it is being accessed through the Web user interface or on a call.

Advanced Settings Menu Layout

Xsi Setting

Sub Item	Description	Setting	Default
Xsi Setting*1	Specifies the ID and password for the Xsi service.	Line 1–12 –ID*2 –Password*2	Not stored

*1 This item is displayed only when the feature is enabled. Contact your administrator for further information.
*2 Max. 128 characters

UC Setting

Sub Item	Description	Setting	Default
UC Setting*1	Specifies the ID and password for the Broadsoft UC service (IM&P).	–ID*2 –Password*2	Not stored

*1 This item is displayed only when the feature is enabled. Contact your administrator for further information.
*2 Max. 128 characters

Call Settings

Sub Item	Description	Setting	Default
Block Anonymous	Specifies whether or not to block incoming anonymous calls.	Line 1–12 ☐ On ☐ Off	Off
Anonymous Call	Specifies whether or not to make outgoing anonymous calls.	Line 1–12 ☐ On ☐ Off	Off
Block Caller ID	Edits/deletes the phone numbers to reject incoming calls.	Enter Number*2, edit number*2, delete number, delete all numbers	Not stored
Anywhere*1	Specifies/edits the Xsi's Anywhere settings.	Line 1–12 Registration: –Name –Phone Number*2 Edit: –Status ☐ On ☐ Off –Name –Phone Number*2 –Alt. Number*2	—
Remote Office*1	Specifies the Xsi's Remote Office setting.	Line 1–12 –Status ☐ On ☐ Off –Phone Number*2	—
SimultaneousRing*1	Specifies the Xsi's Simultaneous Ring setting.	Line 1–12 –Status ☐ On ☐ Off –Phone Number*2	—
System Lock	Selects whether to lock the Call Settings menu.	☐ On*3 ☐ Off	Off

*1 If the Xsi's service is available, you can select this item. Contact your administrator for further information.
*2 In a phone number that exceeds 32 digits, the exceeding digits will not be displayed.

*3 Password is required (4 digits).

Executive Filtering

Sub Item	Description	Setting	Default
Executive Filtering*1	Sets whether to filter calls to an executive terminal using the Broadsoft Executive-Assistant feature.	Line 1–12 ☐ On ☐ Off	Off

*1 This item is displayed only when the feature is enabled. Contact your administrator for further information.

Assistant Settings

Sub Item	Description	Setting	Default
Assistant Filtering*1	Sets whether to filter calls to an assistant terminal using the Broadsoft Executive-Assistant feature.	Line 1–12 Specify a line as "Executive". ☐ On ☐ Off	Off
Divert Setting*1	Sets the transfer feature for an executive terminal using the Broadsoft Executive-Assistant feature.	☐ On Phone Number ☐ Off	Off

*1 This item is displayed only when the feature is enabled. Contact your administrator for further information.

Specifications

KX-HDV330

Item	Specifications
Power Supply	AC adaptor / PoE (IEEE 802.3af)
Power Consumption	PoE Stand-by: approx. 2.7 W (ECO mode off), approx. 2.2 W (ECO mode on) Talking: approx. 3.5 W (ECO mode off), approx. 2.8 W (ECO mode on) AC Adaptor Stand-by: approx. 2.6 W (ECO mode off), approx. 1.9 W (ECO mode on) Talking: approx. 3.4 W (ECO mode off), approx. 2.7 W (ECO mode on)
Maximum Power Consumption	Approx. 4.4 W
Operating Environment	0 °C (32 °F) to 40 °C (104 °F)
Ethernet Port	LAN: 1 (RJ45), PC: 1 (RJ45)
Ethernet Interface	10Base-T/100Base-TX/1000Base-T (Auto / 100MB-FULL / 100MB-HALF / 10MB-FULL / 10MB-HALF) Auto MDI / MDIX
Wideband Codec	G.722
Narrowband Codec	G.711a-law / G.711μ-law / G.729a
Multiple Line	12
LCD Display	4.3-inch color TFT with touch panel 16,772,216 colors (Full color)
LCD Size	480 × 272 pixels
LCD Backlight	8 levels
VoIP Connection Method	SIP
Speaker	1
Microphone	1
Headset Jack	1 (RJ9)
EHS Jack	1 (ø3.5 mm [1/8 in], for EHS only)
Bluetooth	1 (Class 1)
Dimensions (Width × Depth × Height; stand attached)	"High" position: 195 mm × 175 mm × 177 mm (7.7 in × 6.9 in × 7.0 in) "Low" position: 195 mm × 176 mm × 154 mm (7.7 in × 6.9 in × 6.1 in)
Weight (with handset, handset cord and stand)	850 g (1.87 lb)

KX-HDV20

Item	Specifications
Power Supply*1	Power is supplied from the KX-HDV330.
Power Consumption	Stand-by: approx. 0.5 W
Maximum Power Consumption	Approx. 1.5 W
Operating Environment	0 °C (32 °F) to 40 °C (104 °F)
LCD Display	Monochrome graphical
LCD Size	160 × 384 pixels, 12 lines
LCD Backlight	6 levels (Always On/Automatic/Always Off)
Dimensions (Width × Depth × Height; stand attached)	"High" position: 110 mm × 176 mm × 178 mm (4.3 in × 6.9 in × 7.0 in) "Middle" position: 110 mm × 176 mm × 154 mm (4.3 in × 6.9 in × 6.1 in) "Low" position: 110 mm × 175 mm × 121 mm (4.3 in × 6.9 in × 4.8 in)
Weight (with stand)	430 g (0.95 lb)

*1 The KX-HDV20 can be used only when the KX-HDV330 is receiving power from the optional AC adaptor.

Troubleshooting

Common Issues and Solutions

General Use

Issue	Possible Cause	Solution
The display is blank.	**The unit is not receiving power.**	The unit is not designed to function when there is a power failure. Make sure that the device supplying PoE is receiving power and that the Ethernet cable is properly connected. If an AC adaptor is connected, confirm that the AC adaptor is connected and receiving power.
The unit is not performing properly.	**Cables or cords are not connected properly.**	Check all connections.
	Your connection settings are incorrect.	● Consult your administrator to confirm that your settings are correct. ● If the problem persists, consult your dealer.
	An error has occurred.	Restart the unit.
I cannot hear a dial tone.	**—**	Confirm that the LAN cable is properly connected.
I cannot cancel the phonebook lock.	**The password you entered was incorrect.**	Enter the correct password.
I forgot my password.	**—**	Consult your administrator or dealer.
The date and time are not correct.	**—**	Adjust the date and time of the unit.
The Message/Ringer lamp is lit.	**You received a voice message while you were on the phone or away from your desk.**	Check the voice message.
The KX-HDV20 will not turn on.	**The KX-HDV330 is receiving power via Power-over-Ethernet (PoE).**	Connect the KX-HDV330 to an AC power outlet using the optional AC adaptor.

Making and Receiving Calls

Issue	Possible Cause	Solution
I cannot make calls.	**The phone number was entered incorrectly.**	● Confirm that you have entered the phone number of the other party correctly. ● Consult your administrator or dealer.
	The phonebook list is being imported or exported.	● Wait a few minutes for the operation to complete. ● Confirm with your administrator or dealer.

Issue	Possible Cause	Solution
I cannot make long distance calls.	**Your telephone service does not allow you to make long distance calls.**	Make sure that you have subscribed to your telephone company's long distance service.
The unit does not ring when a call is received.	**The ringer is turned off.**	Press the [+] volume key while a call is being received, or change the ringer volume setting.
While talking to an outside party, the line is disconnected.	**Your phone system/service may impose a time limit on outside calls.**	Consult your dealer to extend the time limit, if necessary.

Sound Quality

Issue	Possible Cause	Solution
The other party cannot hear my voice.	**The unit is muted.**	Press 🎤/📞/[MUTE/AUTO ANS] to turn off the mute feature.
	If you are using the speakerphone, objects may be obstructing the microphone.	Do not obstruct the unit's microphone during calls. Keep your hands, as well as common objects such as folders, cups, and coffee pots away from the unit during calls.
Sound cuts out; I can hear myself through the speaker.	**You are too far away from the microphone.**	Try speaking closer to the microphone.
	The environment is not suited to speakerphone calls.	● Do not use the unit within 2 m (6 ft 7 in) of projectors, air conditioning devices, fans, or other audible or electrical noise emitting devices. ● If using the unit in a room with windows, close the curtains or blinds to prevent echoes. ● Use the unit in a quiet environment.
	The unit was moved during a call.	Do not move the unit while on a call.
	Objects are obstructing the microphone.	Do not obstruct the unit during calls. Keep your hands, as well as common objects such as folders, cups, and coffee pots away from the unit during calls.
	The other party is using a half-duplex speakerphone.	If the other party is using a half-duplex speakerphone, sound may cut out occasionally during calls. For best performance, the other party should use a full-duplex speakerphone.

Phonebook List

Issue	Possible Cause	Solution
I cannot add or edit entries to the phonebook list.	**The phonebook list is full.**	Delete any unnecessary entries. The maximum number of entries in the phonebook list is 2500.

Bluetooth Headset

Issue	Possible Cause	Solution
I cannot have a conversation using the Bluetooth headset.	**The headset is not registered.**	Make sure that the headset is properly registered to the unit.
	An EHS headset is connected.	Remove the EHS headset from the headset jack. Priority is given to the EHS headset when both are connected.
	The headset is not charged.	Make sure that the headset is properly charged by following the instructions in the headset's documentation.

Error Messages

During operation, error messages might appear on the unit. The following table lists these messages and possible causes and solutions.

Error Message	Possible Cause	Solution
`Error:001 Check LAN cable.`	**The LAN cable is not connected.**	Check all connections.
`Error:002 IP Address Collision`	**The unit's network settings are incorrect.**	Consult your system administrator or dealer.
`Error:002 IP Address`		
`Error:003 Not Registered`	**Failed to register to SIP server.**	Consult your system administrator or dealer.
`Memory Full`	**The phonebook is full and cannot store the new item.**	Remove unnecessary data in the phonebook and try again.
`No Entries`	**When trying to view the phonebook: No items have been stored. See "Storing an Item in the Personal Phonebook", Page 41.** **When trying to view the Incoming or Outgoing Call Log: No logs have been stored.**	
`Need Repair`	**Device fault.**	Contact your phone system dealer/ service provider.
`Phonebook Error`	**The memory became full during a phonebook download.**	● Remove unnecessary data in the phonebook, or consult your administrator regarding the number of items being downloaded. ● This message disappears if you access the phonebook.

WALL MOUNTING TEMPLATE 1
(KX-HDV330, optionally with 1 attached KX-HDV20)

1. Drive the screws into the wall as indicated.
2. Hook the unit onto the screw heads.

Note:
Make sure to set the print size to correspond with the size of this page. If the dimensions of the paper output still deviate slightly from the measurements indicated here, use the measurements indicated here.

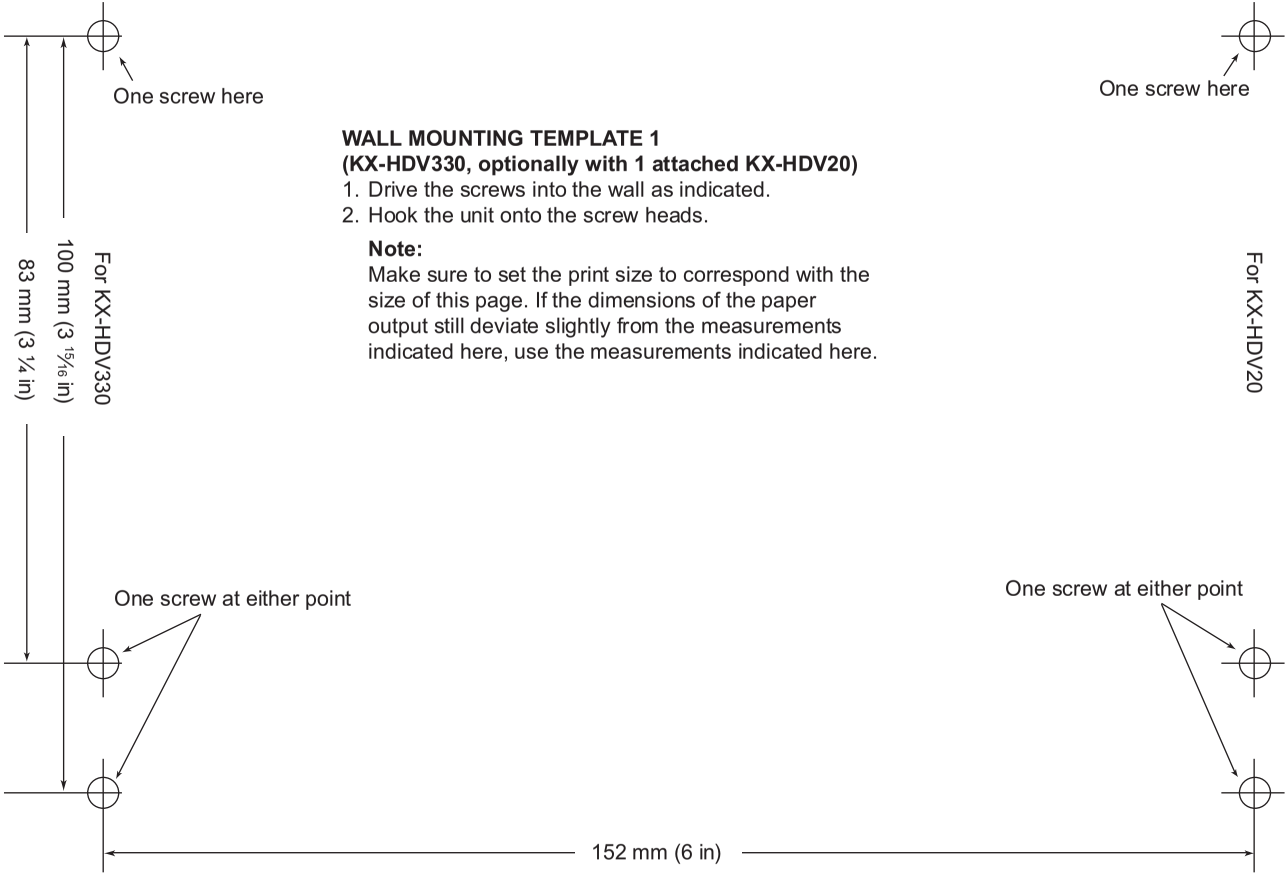

WALL MOUNTING TEMPLATE 2
(For mounting 2 or more KX-HDV20 units)

1. Drive the screws into the wall as indicated.
2. Hook the unit onto the screw heads.

Note:
Make sure to set the print size to correspond with the size of this page. If the dimensions of the paper output still deviate slightly from the measurements indicated here, use the measurements indicated here.

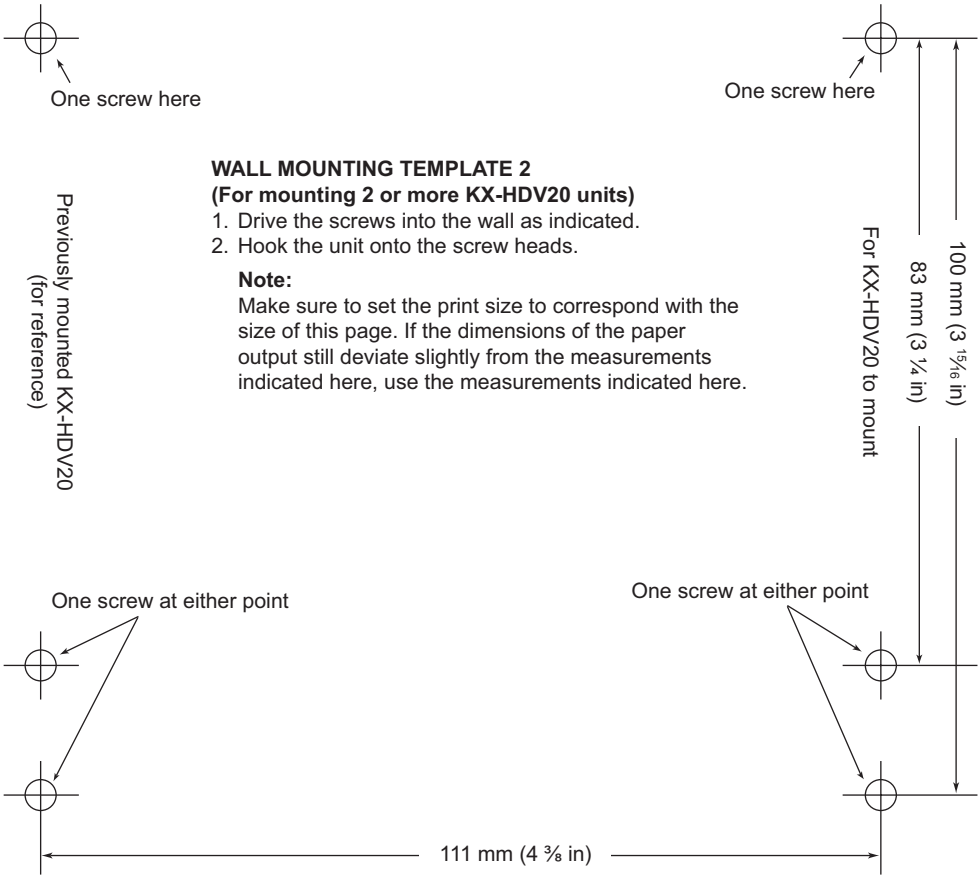

Panasonic System Networks Co., Ltd.

1-62, 4-chome, Minoshima, Hakata-ku, Fukuoka 812-8531, Japan
Web Site: http://www.panasonic.net/pcc/support/sipphone/

Panasonic Corporation of North America

Two Riverfront Plaza, Newark, NJ 07102-5490
Web Site: http://www.panasonic.net/pcc/support/sipphone/

Panasonic Canada Inc.

5770 Ambler Drive, Mississauga, Ontario, L4W 2T3
Web Site: http://www.panasonic.com/ca/

Copyright:
This material is copyrighted by Panasonic System Networks Co., Ltd., and may be reproduced for internal use only. All other reproduction, in whole or in part, is prohibited without the written consent of Panasonic System Networks Co., Ltd.

© Panasonic System Networks Co., Ltd. 2015

PNQX7593ZA PD1015SM0