Panasonic®

# Installation Guide

## HomeHawk Front Door

Model No. **KX-HN7001**

## HomeHawk Front Door/Outdoor

Model No. **KX-HN7002**
**KX-HN7003**
**KX-HN1007**

Model shown is KX-HN7001.

**Thank you for purchasing a Panasonic product.**

This document explains how to configure the access point, front door camera and optional outdoor camera using a mobile device. These steps must be followed before you can use the system.
For details about how to use the system, refer to the User's Guide (page 31).

**Charge the batteries for about 8 hours before camera installation (page 22).**

Please read this document before using the unit and save it for future reference.

For assistance, please contact us at 1-800-272-7033 or visit our Web site: **http://shop.panasonic.com/support** for customers in the U.S.A.

**Please register your product: http://shop.panasonic.com/support**

Printed in China

## *Table of Contents*


### Introduction
Model composition .....3
Accessory information .....3
Expanding your camera .....5

### Important Information
Graphical symbols for use on equipment and their descriptions .....6
About this system .....6
For your safety .....6
Important safety instructions .....8
Security cautions .....8
For best performance .....9
Privacy and rights of portrait .....9
Other information .....9

### Installation Location
Wireless communication range .....12
Information about sensor features .....12
Information about night vision mode .....13
Installation location examples .....14
Do not install in these locations .....17

### Setup
Part names and functions .....18
Setup overview .....22
Battery charging for cameras .....22
Turning the power on for cameras .....23
Downloading the [HomeHawk] app .....23
Connections for access point .....23
Initial setup .....24
Registering the camera .....24
Confirming the camera installation area .....25
Camera installation .....25
Testing the motion detection range .....29
Registering another mobile device .....29

### Appendix
Features available when using the [HomeHawk] app .....31
Accessing the User's Guide .....31
Specifications .....32
Open source software notice for access point .....33
Software information for access point .....33
FCC and other information .....34
Customer services .....35
Limited Warranty (ONLY FOR U.S.A.) .....36




HN7001_(en_en)_1228_ver.030.pdf 2 2017/12/28 16:21:52

# Model composition

| Model No. | Access point | Front door camera | | Outdoor camera | |
|---|---|---|---|---|---|
| | Part No. | Part No. | Qty. | Part No. | Qty. |
| KX-HN7001 | KX-HNB700 | KX-HNC700 | 1 | – | – |
| KX-HN7002 | KX-HNB700 | KX-HNC700 | 1 | KX-HNC710 | 1 |
| KX-HN7003 | KX-HNB700 | KX-HNC700 | 1 | KX-HNC710 | 2 |
| KX-HN1007 | KX-HNB700 | KX-HNC700 | 1 | KX-HNC710 | 2 |

# Accessory information

## Supplied accessories

| No. | Accessory item/Part number | Qty. | | |
|---|---|---|---|---|
| | | KX-HN7001 | KX-HN7002 | KX-HN7003<br>KX-HN1007 |
| ① | AC adaptor for access point/ PNWYAB700W00 | 1 | 1 | 1 |
| ② | Ethernet cable/PNWYAB700W01 | 1 | 1 | 1 |
| ③ | USB cable/PNWYAC700W00 | 1 | 1 | 1 |
| ④ | Wall mounting adaptor for front door camera/PNWYAC700W01 | 1 | 1 | 1 |
| ⑤ | Spacer for front door camera/ PNWYAC700W01 | 1 | 1 | 1 |
| ⑥ | Wall mounting screws 25 mm (1 inch)/ PNWYAC700W02*1 | 3 | 5 | 7 |
| ⑦ | Suspension wire tool<br>– Safety wire: 1<br>XXXX<br>– Washer: 1<br>The washer for attaching safety wire to camera ø12 mm (15/32 inches)/ xxxx<br>– Screw: 1<br>The screw for attaching the safety wire to a wall or ceiling 10 mm (3/8 inches)/xxxx<br>– Screw safety wire: 1<br>The screw safety wire for attaching the safety wire to the camera | - | 1 | 1 |



HN7001_(en_en)_1228_ver.030.pdf 3 2017/12/28 16:21:52

■ **For KX-HN1007**

| | | | | |
|---|---|---|---|---|
| ⑧ | microSD card | - | - | 1 |

*1 The supplied screws can be used as follows.
– 3 screws for the front door camera
– 2 screws for each outdoor camera

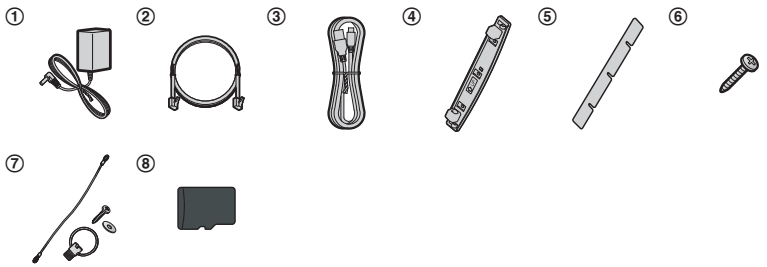


## Additional accessories

**microSD card (not supplied)**
A commercially-available microSD card must be inserted into the access point in order to record images from cameras. The following types of microSD cards are supported.
- microSD / SDHC / SDXC card: Up to 128 GB

## Other information

- Design and specifications are subject to change without notice.
- The illustrations in these instructions may vary slightly from the actual product.

## Trademarks

- microSDHC, microSDXC Logos are trademarks of SD-3C, LLC.
- iPhone and iPad are registered trademarks of Apple Inc.
- Android and Google Play are registered trademarks or trademarks of Google Inc.
- Microsoft, Windows, and Internet Explorer are either registered trademarks or trademarks of Microsoft Corporation in the United States and/or other countries.
- WPA™ and WPA2™ are registered trademarks or trademarks of Wi-Fi Alliance®.
- All other trademarks identified herein are the property of their respective owners.

## Notice

- The access point supports microSDHC and microSDXC memory cards. In this document, the term “microSD card” is used as a generic term for any of the supported cards.
- HomeHawk Front Door is referred to as front door camera or camera in this document.
- HomeHawk Outdoor is referred to as outdoor camera or camera in this document.



HN7001_(en_en)_1228_ver.030.pdf 4 2017/12/28 16:21:52

## Expanding your camera

| **Outdoor camera (optional): KX-HNC710** | |
|---|---|
| You can expand your camera system by registering optional camera units (16 max.) to the access point. | 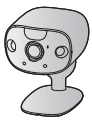 |



HN7001_(en_en)_1228_ver.030.pdf 5 2017/12/28 16:21:52

## Graphical symbols for use on equipment and their descriptions

| Symbol | Explanation | Symbol | Explanation |
|---|---|---|---|
| ~ | Alternating current (A.C.) | ⧈ | Class II equipment (equipment in which protection against electric shock relies on Double Insulation or Reinforced Insulation) |
| ⎓ | Direct current (D.C.) | \| | “ON” (power) |
| ⏚ | Protective earth | ○ | “OFF” (power) |
| ⏚ | Protective bonding earth | ⏻ | Stand-by (power) |
| ⏚ | Functional earth | ⏽ | “ON”/“OFF” (power; push-push) |
| ⌂ | For indoor use only | ⚠ | Caution, risk of electric shock |

## About this system

- This system is an auxiliary system; it is not designed to provide complete protection from property loss. Panasonic will not be held responsible in the event that property loss occurs while this system is in operation.
- The system’s wireless features are subject to interference, therefore functionality in all situations cannot be guaranteed.
  Panasonic will not be held responsible for injury or damage to property that occurs in the event of wireless communication error or failure.

## For your safety

To prevent severe injury and loss of life/property, read this section carefully before using the product to ensure proper and safe operation of your product.

### ⚠ WARNING

#### Power connection

- For the access point, use only the power source marked on the product. For the cameras, 5.0 V, 1.0 A or higher power source.
- Do not overload power outlets and extension cords. This can result in the risk of fire or electric shock.
- Completely insert the AC adaptor/power plug into the power outlet or micro-USB connector into the power supply device’s micro-USB jack. Failure to do so may cause electric shock and/or excessive heat resulting in a fire.

- Regularly remove any dust, etc. from the AC adaptor/power plug by pulling it from the power outlet, then wiping with a dry cloth. Accumulated dust may cause an insulation defect from moisture, etc. resulting in a fire.
- Unplug the product from power outlets if it emits smoke, an abnormal smell, or makes an unusual noise. These conditions can cause fire or electric shock. Confirm that smoke has stopped emitting and contact us at http://shop.panasonic.com/support
- Unplug from power outlets and never touch the inside of the product if its casing has been broken open. Danger of electric shock exists.
- Never touch the plug with wet hands. Danger of electric shock exists.
- Do not connect non-specified devices.

### Installation

- To prevent the risk of fire or electrical shock, do not expose the access point to rain or any type of moisture.
- Do not place or use this product near automatically controlled devices such as automatic doors and fire alarms. Radio waves emitted from this product may cause such devices to malfunction resulting in an accident.
- Do not allow the power cord to be excessively pulled, bent or placed under heavy objects.
- Do not mount the bracket in a location higher than 2.2 m, in an unstable location, in a location subject to frequent vibration, or on a weak wall. (Do not mount on gypsum board, concrete blocks, wooden materials exposed to the outdoors, walls with very rough surfaces, or surfaces that are narrower than the width of the wall mount bracket.) There is a risk of injury if the product falls, or of fire or electric shock if water enters the product.
- Keep small parts (microSD cards, screws, etc.) out of the reach of children. There is a risk of swallowing. In the event they are swallowed, seek medical advice immediately.

### Operating safeguards

- Unplug the product from power outlets before cleaning. Do not use liquid or aerosol cleaners.
- Do not disassemble the product.
- Never put metal objects inside the product. If metal objects enter the product, turn off the circuit breaker and contact an authorized service center.

### Medical

- Consult the manufacturer of any personal medical devices, such as pacemakers or hearing aids, to determine if they are adequately shielded from external RF (radio frequency) energy. Wireless LAN features operate between 2.412 GHz and 2.462 GHz with a peak transmission power as following:
  - Access point: 200 mW
  - Front door camera/Outdoor camera: 100 mW
- Do not use the product in health care facilities if any regulations posted in the area instruct you not to do so. Hospitals or health care facilities may be using equipment that could be sensitive to external RF energy.

## ⚠ CAUTION

### Installation and location

- Never install wiring during a lightning storm.
- Although this camera conforms to the IPX5* code, do not intentionally expose it to water.
  *IPX5 indicates that the product is protected against water jets: water projected at all angles through a 6.3 mm (1/4 inches) nozzle flow rate of 12.5 liters/minute at a pressure of 30 kN/m2 for 3 minutes from a distance of 3 meters (9 feet 10 inches).
- Although this camera conforms to the IP6X* code, do not intentionally expose it to grit and dust.
  *IP6X indicates that the product is protected against grit and dust: this product has shown the capabilities of preventing



HN7001_(en_en)_1228_ver.030.pdf 7 2017/12/28 16:21:52

dust from entering inside the product after the product was in a device that contained dust with a diameter of 75 μm or less for 8 hours and was shaken and removed from that device.
- The AC adaptor and the USB cable are used as the main disconnect device. Ensure that the AC outlet is installed near the product and is easily accessible.

### Preventing accidents and injuries

- The safety wire must be used when mounting the product. There is a risk of injury if the product falls. (KX-HN7002/KX-HN7003/KX-HN1007)
- Do not put your ear(s) near the speaker, as loud sounds emitted from the speaker may cause hearing impairment.

## Important safety instructions

When using your product, basic safety precautions should always be followed to reduce the risk of fire, electric shock, and injury to persons, including the following:

1. Use only the power cord indicated in this document.

**SAVE THESE INSTRUCTIONS**

## Security cautions

Take appropriate measures to avoid the following security breaches when using this product.
– Leaks of private information
– Unauthorized use of this product
– Unauthorized interference or suspension of the use of this product

Take the following measures to avoid security breaches:
- Configure the access point that connects your mobile device to this product to use encryption for all wireless communication.
- You may be vulnerable to security breaches if the unit is used with the login password at its default value. Configure your own value for this settings.
- Do not use passwords that could be easily guessed by a third party. If you keep a record of your passwords, protect that record. Change passwords regularly.
- If you lose your mobile device, change the password used to access this product.
- If you enable the product's auto login feature, enable the screen lock or similar security feature on your mobile device.
- Take care when performing important security related operations such as initializing settings, etc.
- To prevent disclosure of personal information, enable the screen lock or similar security feature on your mobile device.
- When submitting the product for repair, make a note of any important information stored in the product, as this information may be erased or changed as part of the repair process.
- Before handing the product over to a third party for repair or other purposes, perform a factory data reset to erase any data stored in the product and remove the microSD card. Use only trusted repair services authorized by Panasonic.
- Before disposing of the product, perform a factory data reset to erase any data stored in the product. Remove and erase the microSD card.
- If your mobile device will no longer be used with the product, delete your mobile device's registration from the product and delete the corresponding app from your mobile device.
- If this product experiences a power outage, its date and time setting may become incorrect. In this case, the date and time setting will be automatically corrected when your mobile device and this product are connected to the same wireless network.

Additionally, note the following.
- Communications may be interrupted depending on network conditions and wireless signal quality.
- This product may be used in ways that violate the privacy or publicity rights of



HN7001_(en_en)_1228_ver.030.pdf 8 2017/12/28 16:21:52

others. You are responsible for the ways in which this product is used.

# For best performance

## Product location/avoiding noise

The access point and cameras use radio waves to communicate with each other.

- For maximum coverage and noise-free communications, place your access point:
  - at a convenient, high, and central location with no obstructions.
  - away from electronic appliances such as TVs, radios, personal computers, wireless devices, or other phones.
  - facing away from radio frequency transmitters, such as external antennas of mobile phone cell stations (Avoid putting the access point on a bay window or near a window.)
- If the reception for the access point is not satisfactory, move this to another location.

## Environment

- Keep the product away from electrical noise generating devices, such as fluorescent lamps and motors.
- The product should be kept free from excessive smoke, dust, high temperature, and vibration.
- Do not expose this product to direct sunlight or other forms of powerful light such as halogen lights for long periods of time. (This may damage the image sensor.)
- Do not place heavy objects on top of the product.
- When you leave the product unused for along period of time, do as follows:
  - Access point: Unplug the product from the power outlet.
  - Front door camera/Outdoor camera: Turn off the power switch.
- The product should be kept away from heat sources such as heaters, kitchen stoves, etc. It should not be placed in rooms where the temperature is less than -20 °C (-4 °F) or greater than 50 °C (122 °F). Damp basements should also be avoided.
- The maximum communication range may be shortened when the product is used in the following places: Near obstacles such as hills, tunnels, underground, near metal objects such as wire fences, etc.
- Operating the product near electrical appliances may cause interference. Move away from the electrical appliances.

# Privacy and rights of portrait

When installing or using the camera, please take into consideration the rights of others with regard to privacy.
It is generally said that “privacy” means the ability of an individual or group to stop information about themselves from becoming known to people other than those whom they choose to give the information. “Rights of portrait” means the right to be safe from having your own image taken and used indiscriminately without consent.

# Other information

This product has a rechargeable lithium ion battery. Do not throw into fire, apply heat, or charge, use, or leave in a high temperature environment.
– Doing so may cause fluid leak, overheating, or explosion.

## Routine care

- Wipe the outer surface of the product with a soft moist cloth.
- Do not use benzine, thinner, or any abrasive powder.

## Camera image quality

- Camera images may have the following characteristics.
  - Colors in images may differ from the actual colors.
  - When there is light behind the subject (i.e., backlighting), faces may appear dark.



HN7001_(en_en)_1228_ver.030.pdf 9 2017/12/28 16:21:52

– Image quality may be reduced in dark locations.
– Images may appear hazy when there are outdoor lights in use.

## Protecting your recordings

- Do not remove the microSD card or disconnect the product's AC adaptor while reading or writing data to the microSD card. Data on the card could become corrupted.
- If a microSD card malfunctions or is exposed to electromagnetic waves or static electricity, data on the card could become corrupted or erased. Therefore we recommend backing up important data to a computer or other device.

## Notice for product disposal, transfer, or return

- This product can store your private/confidential information. To protect your privacy/confidentiality, we recommend that you erase information from the memory before you dispose of, transfer, or return the product.

## Notice for built-in battery

**ATTENTION:**
A lithium ion battery that is recyclable powers the product you have purchased. Please call 1-800-8-BATTERY (1-800-822-8837) for information on how to recycle this battery.

WARNING for Lithium Ion (Li-Ion) Battery: Risk of fire and burns. Do not open, crush, heat above 50 °C (122 °F) or incinerate. Follow the instructions in the operating instructions.

Remove the built-in rechargeable battery before disposing of the cameras. Do not dismantle or replace the battery so that you can use the camera again. This could cause fire or an electric shock. Replace it at an authorized service center.

■ **Front door camera**

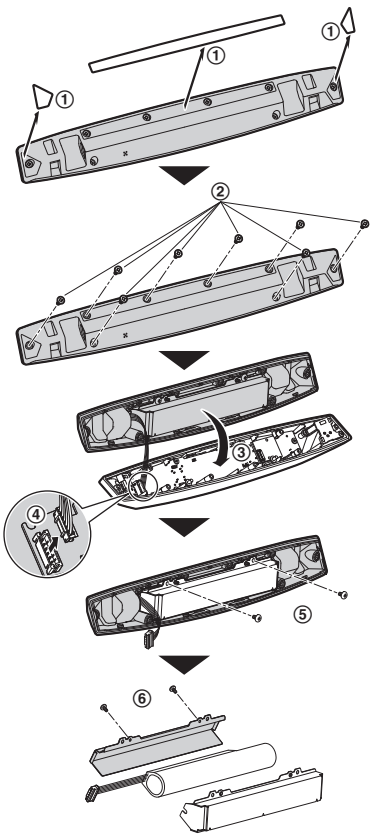


- Disconnect the power cord from the camera when removing the battery.
- Perform steps ① to ⑥, lift the battery, and then remove it.

■ **Outdoor camera**

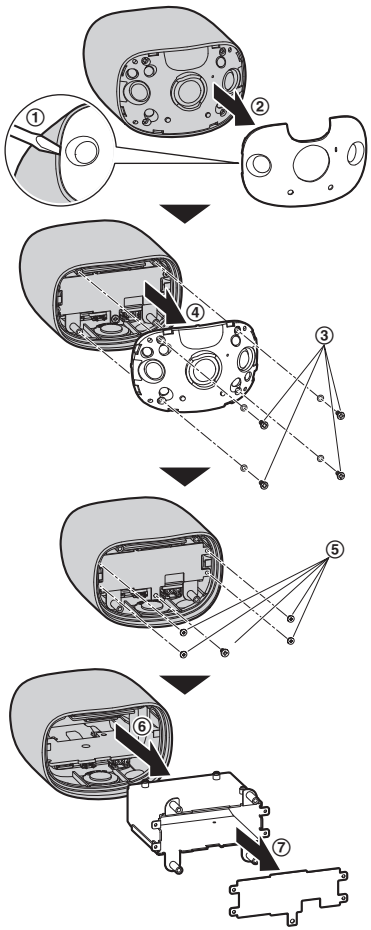


- Disconnect the power cord from the camera when removing the battery.
- Perform steps (①) to (⑦), lift the battery, and then remove it.

## Notice

- This product is designed for use in the United States of America. Sale or use of this product in other countries may violate local laws.
- Cet appareil est conçu pour être utilisé aux États-Unis d'Amérique. La vente ou l'emploi de cet appareil dans certains autres pays peut constituer une infraction à la législation locale.
- Este producto está diseñado para usarse en los Estados Unidos de América.
  La venta o el empleo de este producto en ciertos países puede constituir violación de la legislación local.
- 本產品專為美國使用而設。若在其他國家銷售或使用，可能會違反當地法例。
- この製品は、日本国外での使用を目的として設計されており、日本国内での使用は法律違反となります。従って、当社では日本国内においては 原則として修理などのサービスは致しかねます。



HN7001_(en_en)_1228_ver.030.pdf 11 2017/12/28 16:21:52

## Wireless communication range

The wireless communication range of each device in the system from the access point is approximately 92 m (up to 300 feet). Wireless communication may be unreliable when the following obstacles are located between the access point and other devices.

- Metal doors or screens
- Walls containing aluminum-sheet insulation
- Walls made of concrete or corrugated iron
- Double-pane glass windows
- Multiple walls
- When using each device on separate floors or in different buildings

**Note:**

- The access point cannot connect wirelessly to devices other than the front door camera or outdoor camera.
- The camera's LED indicator blinks slowly in red if it is out of range of the access point. In this case, confirm all connections, including those of the access point.
- The signal strength can be checked with the **[HomeHawk]** app. For more information, refer to the User's Guide (page 31).

## Information about sensor features

The cameras have 2 sensor features that are used for motion detection: a visual sensor and an infrared sensor (i.e., heat sensor).
Please read the following information before deciding where to install the camera.

**Note:**

- The camera's sensor features are not designed to be used in situations that require high reliability. We do not recommend use of the sensor features in these situations.
- Panasonic takes no responsibility for any injury or damage caused by the use of the camera's sensor features.

### Detection method

| Visual sensor | Infrared sensor |
|---|---|
| The camera detects changes in the images being displayed.<br>● The camera detects changes in the brightness levels of moving objects. | The camera detects temperature differences of objects in the images being displayed.<br>● The infrared sensor uses infrared rays to detect temperature differences within its range that are emitted naturally by people, animals, etc. |



HN7001_(en_en)_1228_ver.030.pdf 12 2017/12/28 16:21:53

### Detection range

| Visual sensor |
|---|
| Can detect motion anywhere in the visible image.<br> 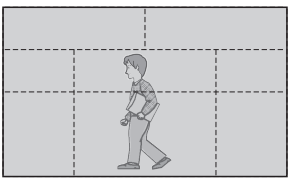 <br>● You can adjust the area detectable by the visual sensor. For more information, refer to the User's Guide (page 31). |

### Main characteristics

| Visual sensor | Infrared sensor |
|---|---|
| Easily detects movement in the daytime or when it is bright. Through the use of white LEDs or IR-LEDs, movement can also be detected when it is dark.<br>● Movement may be incorrectly detected when the moving object and the background have a similar color.<br>● Movement may be incorrectly detected when there are sudden changes to the overall brightness levels such as when external lights are used. | Easily detects when there is a big difference between the temperatures of objects and the surrounding environment, such as in winter or late at night.<br>● The sensor cannot easily detect when there is no difference between the temperatures of objects and the surrounding environment.<br>● If the camera is mounted facing a road, the sensor may detect incorrectly due to interference caused by the heat from passing cars. |

## Information about night vision mode

The cameras feature color night vision mode, which allows camera images to be viewable even when the surrounding area is dark.

**Note:**

- When **[Color]** is selected for the night vision mode, the white LEDs are lit enabling images to be displayed in color.
- When **[Monochrome]** is selected for the night vision mode, the array of infrared LEDs that surround the camera's lens light up in a faint red color that can be seen in the dark.
  The visibility range for **[Monochrome]** in dark conditions is longer than for **[Color]**.
- If the camera is installed in front of a window and points directly at the window, images may be poor when night vision mode is active.



HN7001_(en_en)_1228_ver.030.pdf 13 2017/12/28 16:21:53

# Installation location examples

**Important:**

- Install the front door camera with a height of up to 2.2 m (7 feet 3 inches) from the ground.

## I want to detect visitors approaching the house

Refer to the table below for detecting visitors at an entrance or gate without detecting cars in the street.

■ **Front door camera**

| Ideal example | Poor example |
|---|---|
| 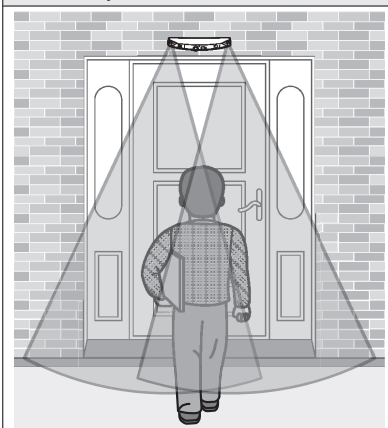 | 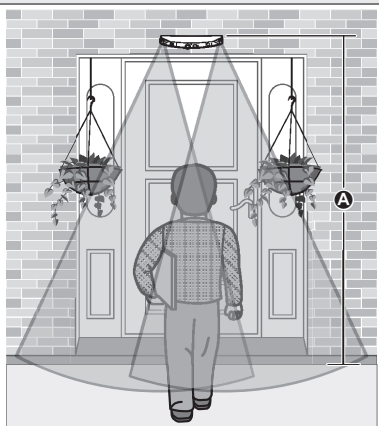  |
| Only visitors pass in front of the camera and there are no objects to cause false detections. | Ⓐ Approx. 2.2 m (7 feet 3 inches)<br>Flower vases on the side of the door are more likely to cause false detections. |

**Note:**

- The visual detection range is as follows.
  - Horizontal: 150°
  - Vertical: 90°

■ **Outdoor camera**

| Ideal example | Poor example |
|---|---|
| 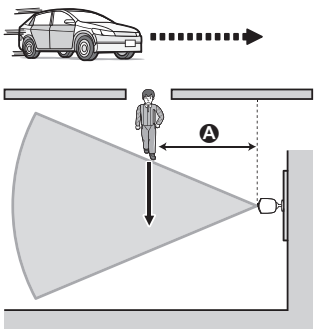 <br>Ⓐ Approx. 2.5 m (3 feet)<br>Visitors pass in front of the camera from side to side, cars in the street are less likely to cause false detections. | 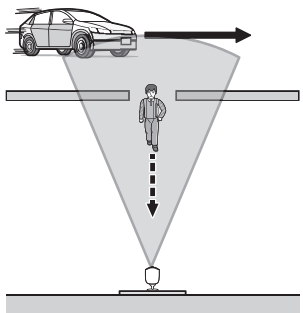 <br>Cars in the street are more likely to cause false detections. |

**Note:**

- The visual detection range is as follows.
  - Horizontal: 150°
  - Vertical: 90°

## I want to detect people entering the garage

Refer to the table below for detecting people entering a garage without detecting cars in the street.

## *Installation Location*

| Ideal example | Poor example |
|---|---|
| 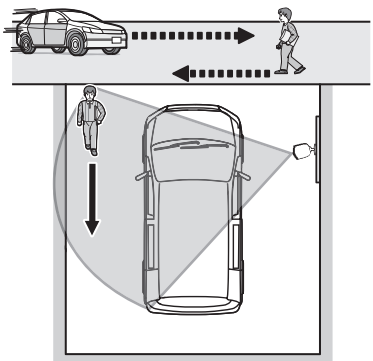 <br>Visitors pass in front of the camera from side to side, cars in the street are less likely to cause false detections.<br>● To prevent faces from being obscured by tall vehicles, adjust the installation position and angle of the camera. | 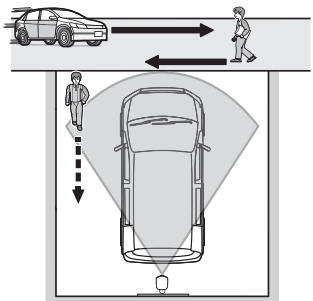 <br>Cars in the street are more likely to cause false detections. |

**Note:**

- The visual detection range is as follows.
  - Horizontal: 150°
  - Vertical: 90°



HN7001_(en_en)_1228_ver.030.pdf 16 2017/12/28 16:21:53

## Do not install in these locations

### Installing in the following areas may cause deformation, discoloration, malfunction, or operational failure

- In direct sunlight or directly under an outdoor light (even if the surroundings are within operational temperature range, parts of the product may become hot)
- Areas subject to frequent vibration, shock, or impact
- Near fire, heating devices, or air conditioners (including outdoor equipment such as unit compressors)
- Areas exposed to grease or steam
- Near devices that emit strong radio waves, such as mobile phones
- Areas subject to extreme temperature changes (which can lead to condensation)
- Near coasts directly subjected to sea breezes, or near sulfuric hot springs (exposure to salt can shorten the life of the product)
- Near TVs, radios, automated office equipment such as computers, air conditioners, water heater panels (with intercom), or home security equipment (these may cause noise)
- Near satellite broadcasting receivers such as tuners, TVs with built-in satellite tuners, and recorders (broadcasted images may be distorted)
- Areas where hydrogen sulfide, ammonia, dust, or toxic gases are present

### Installing in the following areas may cause false detections

- Areas where people approach directly from the front of the camera, such as narrow walkways (outdoor camera)
- Areas where objects such as trees or hanging laundry move due to wind (temperature variation and motion may cause false detections)

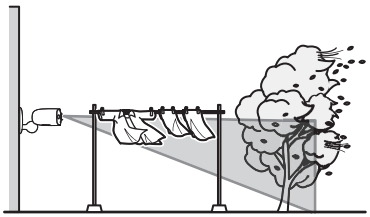

- Areas affected by breezes from fans, air conditioning unit compressors, water heaters, or car exhaust (severe temperature variations may cause false detections)

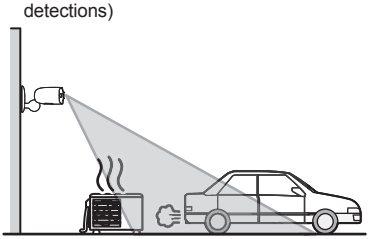

- Areas subject to severe weather, such as strong wind (camera shake can cause false detections) or rain (strong rain may be detected as an object moving in front of the camera)
- Areas with reflective objects, such as glass, that can interfere with detection of temperature variation
- Areas where brightness changes easily
- Areas where backlight occurs (faces appear dark and are difficult to identify), such as the following
  - Areas where most of the background is the sky
  - Areas where direct sunlight reflects off a white wall or background
  - Bright areas such as those exposed to direct sunlight



HN7001_(en_en)_1228_ver.030.pdf 17 2017/12/28 16:21:53

# Part names and functions

## Access Point

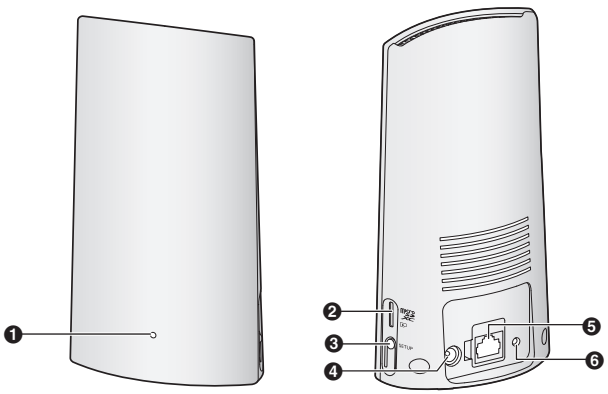


❶ **LED indicator**
❷ **microSD card slot*1**
❸ **【SETUP】button*2**
❹ **DC jack**
❺ **LAN jack**
❻ **Reset button**

*1 Used when inserting a microSD card.
*2 Used when performing initial setup.

### LED indicator

You can use the LED indicator to confirm the access point's status.

| Indicator | Status |
|---|---|
| Off | No power, or LED indicator is turned off*1 |
| Amber, lit | Power on until start up completed |
| Green, lit | Power is on (normal operations), or registration completed for the camera or smartphone*1 |
| Green, blinking slowly | Registration mode |
| Green, blinking quickly | IP address is not obtained, or accessing a microSD card |
| Alternating:<br>Green, lit ↔ Amber, lit | Updating completed*2 |
| Red, lit | Registration failed*1 |



HN7001_(en_en)_1228_ver.030.pdf 18 2017/12/28 16:21:53

*1 You can configure the access point so that its LED indicator does not light during normal operation. For more information, refer to the User's Guide (page 31).
*2 It may take some time for the access point to finish starting up.

## Camera

■ **Front door camera**

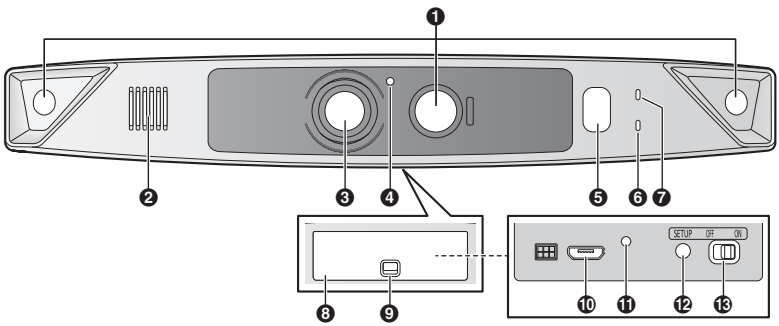


❶ **Infrared sensor**
❷ **Speaker**
❸ **Lens**
❹ **Light sensor**
❺ **White LED lens**
❻ **LED indicator**
❼ **Microphone**
❽ **Button cover**
❾ **Lock key**
❿ **USB connection*1**
⓫ **Charging LED**
⓬ **【SETUP】button*2**
⓭ **Power slide switch**

*1 Used to connect the USB cable when charging.
*2 Used when performing initial setup.



HN7001_(en_en)_1228_ver.030.pdf 19 2017/12/28 16:21:53

■ **Outdoor camera (KX-HN7002/KX-HN7003/KX-HN1007)**

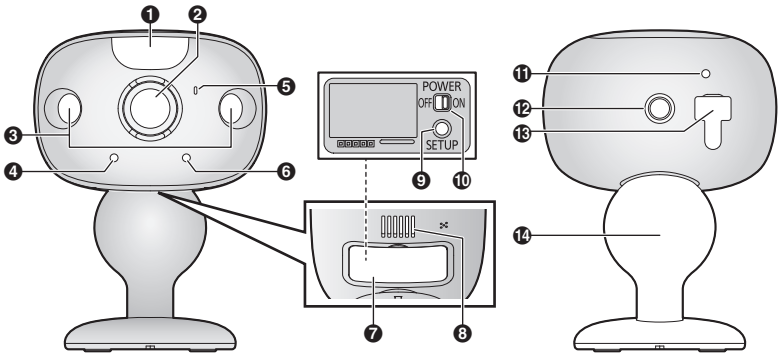


❶ **White LED lens**
❷ **Lens**
❸ **Infrared sensors**
❹ **LED indicator**
❺ **Microphone**
❻ **Light sensor**
❼ **Interface cover**
❽ **Speaker**
❾ **【SETUP】button*1**
❿ **Power slide switch**
⓫ **Charging LED**
⓬ **Camera nut**
⓭ **USB cover/connection*2**
⓮ **Wall mounting adaptor**

*1 Used when performing initial setup.
*2 Used to connect the USB cable when charging.

## LED indicators

You can use the LED indicators to confirm the status of the cameras.

| Indicator | Status |
|---|---|
| Off | No power, or LED indicator is turned off |
| Green or red, blinking quickly - off for 1 second | Camera is on |
| Amber, lit | Power on until start up completed, or not registered to the access point |
| Green, lit | Registration successfully completed or signal level is strong |
| Green, blinking quickly | Camera is searching for an access point |
| Red, lit | Registration failed, signal level is weak*1, or detecting motion |
| Red, blinking quickly | Streaming data |



HN7001_(en_en)_1228_ver.030.pdf 20 2017/12/28 16:21:53

| Indicator | Status |
|---|---|
| Amber, blinking slowly | Battery is running low |
| Green, blinking slowly | Registration mode |
| Red, blinking slowly | Camera is out of range of the access point |

*1 The signal level (strong, good, weak) is shown after pressing the 【**SETUP**】 button for 3 seconds.



HN7001_(en_en)_1228_ver.030.pdf 21 2017/12/28 16:21:53

## Setup overview

1 **Battery charging**
Make sure the battery is fully charged before you setup.

2 **Power on**
Turning the power on for the camera.

3 **Downloading the application**
Download the **[HomeHawk]** app to your mobile device.

4 **Connection for access point**
Connect the AC adaptor and Ethernet cable to the access point.

5 **Initial setup**
Make sure you can access the system using your mobile device.

6 **Registration**
Required only if the camera was purchased separately (i.e., not as part of a bundle).

7 **Confirm the installation area**
Read the information in this document to confirm that the desired installation area is suitable to proper operation.

8 **Installation**
Install the camera in the desired location.

## Battery charging for cameras

- This camera has an internal rechargeable battery.
- Remove the camera from the wall before charging (page 27).
- Turn the camera off before charging the battery. If the camera is turned on while charging, it may take longer to charge.
- Make sure to charge the battery indoors and in a dry location.
- Charge the battery in a location with a temperature between 5 °C and 40 °C. The battery cannot charge in locations outside of these temperatures.

### Front door camera

Charge for about 8 hours.

1 Slide the lock key (①).

2 Open the button cover (②).

3 Insert the USB cable (③) into the micro-USB connector.

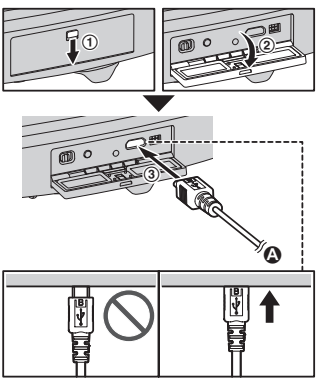

Ⓐ 5.0 V, 1.0 A or higher power source

### Outdoor camera

Charge for about 8 hours.

1 Open the micro-USB jack cover (①).

2 Insert the USB cable (②) into the micro-USB connector.

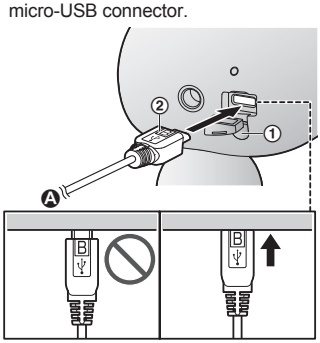



HN7001_(en_en)_1228_ver.030.pdf 22 2017/12/28 16:21:53

Ⓐ 5.0 V, 1.0 A or higher power source

### Charging LED indicators

You can use the charging LED indicators to confirm the charging status of the cameras.

| Indicator | Status |
|---|---|
| Red, lit | Charging is completed |
| Red, blinking slowly | Charging |
| Red, blinking quickly | Charging failure |

## Turning the power on for cameras

Open the cover on the rear of the cameras, and then slide the power switch to ON.

## Downloading the [HomeHawk] app

Download information is available at the web page listed below.

**https://panasonic.net/cns/pcc/support/homehawk**

### Using your device's app store

**iPhone, iPad users**
Search for "Panasonic HomeHawk". iPad users should search in the "iPhone only" category.

**Android™ device users**
Search for "Panasonic HomeHawk".

### Compatible mobile devices

iPhone 5s or later or iPad® (iOS 10.0 or later) or an Android device (Android 4.1 or later)

**Note:**

- The **[HomeHawk]** app may not function properly depending on the system environment, such as the model of your mobile device, peripherals connected to your mobile device, and the apps installed on your mobile device.
- The following Android devices are not compatible with the **[HomeHawk]** app.
  - Android devices that are not supported by Google Play™
  - Android devices with limited hardware features (Bluetooth, wireless LAN, and microphone support are required.)

## Connections for access point

**Note:**

- Use only the supplied AC adaptor.

**1** Insert the AC adaptor DC plug (①) into the access point, then connect the AC adaptor (Ⓐ) to the power outlet.

**2** Insert the Ethernet cable (②) into the LAN jack, then connect the access point to your router (Ⓑ).

**3** Insert a microSD card into the units microSD card (③) slot.

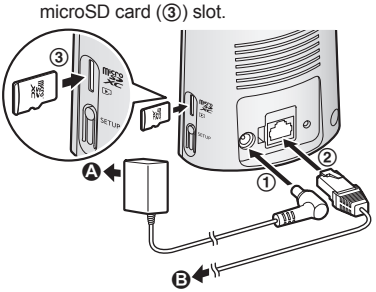




HN7001_(en_en)_1228_ver.030.pdf 23 2017/12/28 16:21:53

## Note about power connections

### AC adaptor connection

- The AC adaptor must remain connected at all times. (It is normal for the adaptor to feel warm during use.)
- The AC adaptor should be connected to a vertically oriented or floor-mounted AC outlet. Do not connect the AC adaptor to a ceiling-mounted AC outlet, as the weight of the adaptor may cause it to become disconnected.

### Power failure

- The access point will not work during a power failure.

# Initial setup

Confirm the following before you begin.
– Make sure you have installed the **[HomeHawk]** app on your mobile device
– Make sure the access point and your wireless router are turned on and the access point's LED indicator is lit in amber or green
– Make sure your access point and mobile device are connected to your wireless router
– Make sure your mobile device can connect to the Internet

**1** Start the **[HomeHawk]** app.
- The end-user license agreement is displayed the first time you start the app.

**2** Follow the on-screen instructions.

**3** Tap **[Access Point]**, wait for a while, and then follow the on-screen instructions.
- If the access point's LED indicator lights in green, tap the green lit button, and then go to step 4.
- If the access point's LED indicator blinks in amber, tap the amber blinking button, and then connect the Ethernet cable to the access point and router. Next, follow the on-screen instructions, wait for a while, and then check the color of the LED lights again.
- If the access point's LED indicator blinks in green, tap the blinking green button, check if DHCP is operating for the router, and then tap **[OK]**.

**4** When prompted, press **[SETUP]** button on the access point.

**5** When prompted, set the password that will be used to log in to the access point while away from home and then tap **[OK]**.

**6** When prompted, enter a name for the access point*1 and for your mobile device and then tap **[OK]**.
- The access point name setting is used by your mobile device to identify the access point. This is useful when you have multiple access points.
- The mobile device name setting is used by the access point and other system users to identify your mobile device. This is useful when performing certain operations, such as deregistering.
- The app's home screen is displayed when initial setup is completed.

*1 A name can only be entered for the access point the first time initial setup is performed.

# Registering the camera

This procedure is not required for devices that were included as part of a bundle.

Before you can use the camera, it must be registered to the access point.
If the camera is not registered to an access point, the camera's LED indicator blinks in amber.
You can register each camera by using the registration buttons or the **[HomeHawk]** app.

**Note:**

- If you purchased cameras separately (i.e., not as part of a bundle), you must register each camera to the access point.
- Before registering the camera, make sure the AC adaptors of the access point and camera are connected and each device is powered.



HN7001_(en_en)_1228_ver.030.pdf 24 2017/12/28 16:21:53

### Using registration buttons

**1** **Access point:**
Press and hold **[SETUP]** until the LED indicator blinks slowly in green.

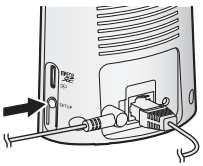

**2** **Front door camera:**
Press and hold the registration button until the LED indicator blinks slowly in green.
- When registration is completed, the camera sounds one long beep.

**Outdoor camera*1:**
Press and hold the registration button until the LED indicator blinks slowly in green.
- When registration is completed, the camera sounds one long beep.

*1 Available for: KX-HN7002/KX-HN7003/KX-HN1007 (page 3).

**Note:**
- If registration fails, the camera sounds several short beeps.

### Using the app

When you register the camera by using the **[HomeHawk]** app, you can assign a name to your devices. For more information, refer to the User's Guide (page 31).

## Confirming the camera installation area

Before deciding where to install the camera, carefully read the chapter "Installation Location", beginning on page 12, to confirm the installation location and direction.

## Camera installation

### Installation precautions

- Do not use an impact driver. (This may lead to damaged screws or over-tightening.)
- Mount the camera on the stable location with a height of 2.2 m (7 feet 3 inches) where the unit can be adequately supported when installing.
- Do not mount the camera on a soft material. It may fall down, break or cause injury.

### Wall material information

#### Siding

- Use the included screws ø4 mm × 25 mm (ø5/32 inches × 1 inch). Make sure the pull-out capacity of each screw is at least 294 N (30 kgf).
- If the weight of the camera is supported by the siding only, the siding could become damaged. Make sure you mount the camera in a location where the structure behind the siding can be used to support the weight of the camera. If this is not possible due to the thickness of the siding, use commercially-available screws ø4 mm × longer than 25 mm (ø5/32 inches × longer than 1 inch).
- Drill a pilot hole using a drill bit that is appropriate for the type of siding. Remove any debris after drilling the pilot hole. Do not drill the pilot hole into the structure behind the siding.



HN7001_(en_en)_1228_ver.030.pdf 25 2017/12/28 16:21:53

**Poor example**
No support behind exterior surface

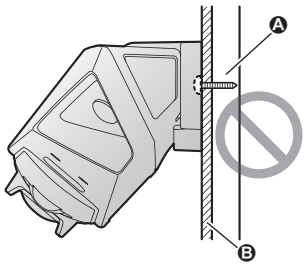


Ⓐ Open space, no support
Ⓑ Siding

**Ideal example**
Structure supports exterior surface

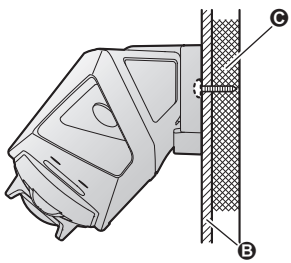


Ⓑ Siding
Ⓒ Structure behind siding

## Concrete

- Do not use the included screws. Use screw anchors (screw ø4 mm (5/32 inches)) designed for concrete walls.
- Carefully read the instructions supplied with the anchors. Follow instructions regarding drill bit diameter, hole depth, etc.
- Drill a pilot hole. Remove any debris after drilling the pilot hole.

**1** Mark the hole depth on the drill bit (Ⓐ) and then drill a pilot hole.

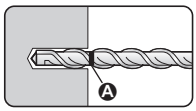


**2** Remove debris.

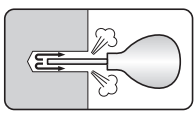

**3** Insert an anchor, tighten the screw, then remove the screw to secure the anchor.

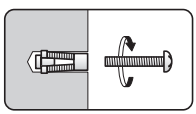

**4** Insert the screw and tighten it.

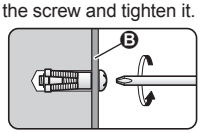


Ⓑ Camera mounting stand

## ALC (autoclaved lightweight cellular concrete)

- Depending on the type of ALC panel, you may not be able to attach the camera. Consult the ALC panel manufacturer.
- Do not use the included screws. After consulting the manufacturer of the ALC panel, use only commercially-available metal screw anchors (screw ø4 mm (5/32 inches)) designed for ALC panels.
- Carefully read the instructions supplied with the anchors. Follow instructions regarding drill bit diameter, hole depth, etc.
- Drill a pilot hole. Remove any debris after drilling the pilot hole.
- Seal the pilot hole with a commercially-available waterproof sealant.

### Other materials (mortar, tile, etc.)

- Do not use the included screws.
- Consult the builder or licensed professional regarding the type of anchor appropriate for the installation location and materials.
- Do not install on gypsum board or concrete blocks.

## Installing the front door camera

Attach the wall mounting adaptor to a porch wall.

- Secure the wall mounting adaptor to the wall by tightening the 3 supplied screws (①).

**1** Remove the lock key of the button cover (②) on the bottom of the camera.

**2** Open the button cover (③).

**3** Slide the power switch to ON (④).
- When adjusting the installation angle of the camera, use the spacer between the wall mounting adaptor and wall as necessary.

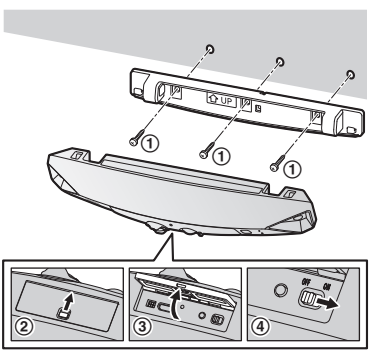


**4** Close the button cover (⑤) and the lock key (⑥). Attach the camera to the wall mounting adaptor.

**Note:**

- **Make sure to close the button cover securely. Water resistance cannot be assured if the button cover is open.**
- When attaching the camera to the wall mounting adaptor, match the positions of the hooks (⑦).
- Rotate the camera until you hear a click and the camera is securely mounted.

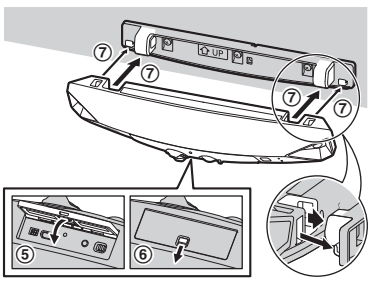


### Removing the front door camera

Rotate the camera away (①) from the wall, and then pull it away (②) from the wall mounting adaptor.

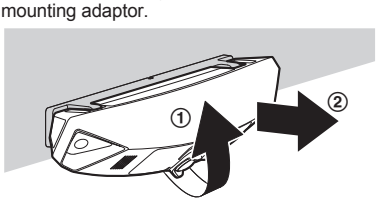


## Installing the outdoor camera

**1** Open the button cover (①), and then slide the power switch to ON (②).

**2** Secure the screw safety wire to the screw hole (③) of the camera using a driver,



HN7001_(en_en)_1228_ver.030.pdf 27 2017/12/28 16:21:53

and then pass the wire through the ring of the screw safety wire (④).

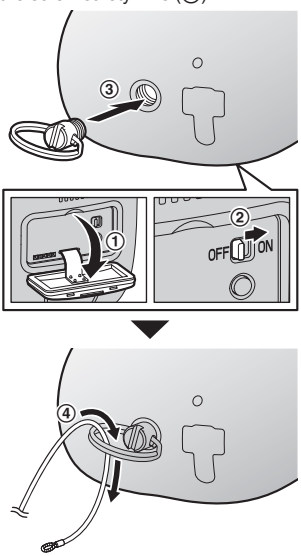


**3** Drive the wall mounting screws into the wall.

Ⓐ Longer than 20 mm (25/32 inches)

Ⓑ Space 1.3 mm (1/32 inches)

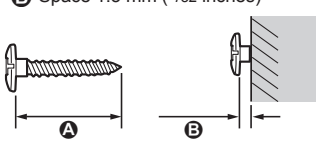


**Note:**

- Use the following template when determining the location of the screw holes.

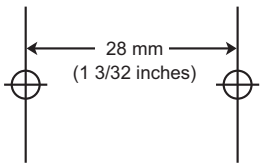


**4** Mount the wall mounting adaptor to the wall and then attach the camera to the wall mounting adaptor.

Ⓐ Wall mounting screws

Ⓑ 28 mm (1 3/32 inches)

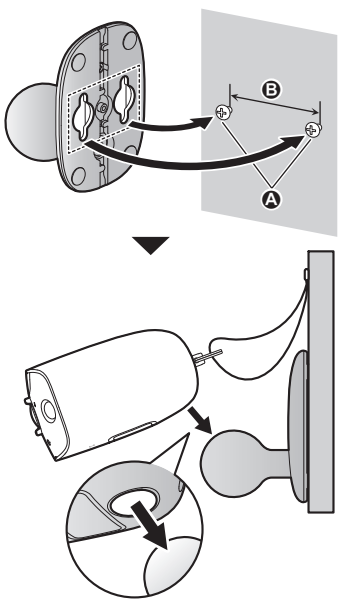




HN7001_(en_en)_1228_ver.030.pdf 28 2017/12/28 16:21:53

**5** Adjust the camera angle.

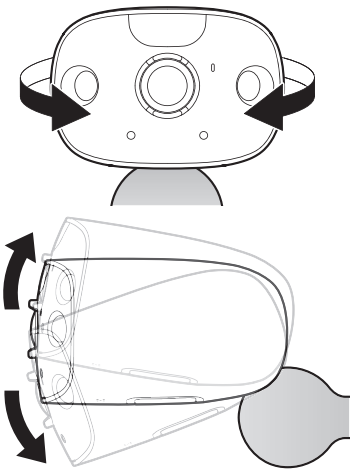

**Note:**

- Attach the safety wire while it is bent.
- Attach the safety wire high on the wall so that the camera does not strike anyone in the event the camera detaches from the wall.
- Do not hang from the camera or stand.

## Testing the motion detection range

After you have installed the **[HomeHawk]** app on your mobile device, you can use your mobile device to test the performance of the camera's motion detection features.
For details about these operations, refer to the User's Guide (page 31).

**1** Start the **[HomeHawk]** app and then tap ☰ .

**2** Tap **[Settings]**.

**3** Tap **[Camera settings]** and select the camera to be tested.

**4** Tap **[Detection]** → **[Detection Test]**.

**5** Move to an area within the camera's viewable area.

**6** While moving near the camera, use your mobile device to observe where you are in the viewable area when the camera's motion detection features are triggered.

**7** Note the areas of the viewable area where movement is detected, and make adjustments as necessary.

**Note:**

- You can adjust the area detectable by the visual sensor. For more information, refer to the User's Guide (page 31).

### Testing the microphone

To test the microphone, speak loudly and clearly into the microphone while a mobile device user is viewing live images from the camera.

## Registering another mobile device

In order to access the system from a mobile device, you must first register the mobile device to the access point. You can register up to 8 mobile devices to an access point.
Confirm the following before you begin.

– Make sure you have completed the initial setup procedure
– Make sure your mobile device can connect to the Internet
– Make sure your wireless router and the access point are turned on
– Make sure your mobile device and the access point are connected to the same wireless router

**1** Using the mobile device that you want to register, download the **[HomeHawk]** app and then start the app.

**2** Follow the on-screen instructions.

**3** When prompted, press the **[SETUP]** button on the access point.
- Your mobile device will be registered to the access point.



HN7001_(en_en)_1228_ver.030.pdf 29 2017/12/28 16:21:53

**4** When prompted, enter the password that will be used to log in to the access point, then tap **[OK]**.

**5** When prompted, enter a name for your mobile device and then tap **[OK]**.
- The app's home screen is displayed when initial setup is completed.
- The mobile device name setting is used by the access point and other system users to identify your mobile device. This is useful when performing certain operations, such as deregistering.



HN7001_(en_en)_1228_ver.030.pdf 30 2017/12/28 16:21:53

## Features available when using the [HomeHawk] app

Some of the camera's features that are available when using the **[HomeHawk]** app are listed below. For more information, refer to the User's Guide (page 31).

– **Live camera monitoring**
  You can view live images from the camera, even while away from home.
– **Listen and talk**
  You can use your mobile device to talk and listen to anyone within range of the camera's microphone and speaker.
– **Sensor adjustment**
  You can adjust the camera's motion detection features, such as detection sensitivity and detection area.
– **Notification**
  You can configure the camera to send a notification to the **[HomeHawk]** app when the camera detects motion.

## Accessing the User's Guide

The User's Guide is a collection of online documentation that helps you get the most out of the **[HomeHawk]** app.

**1** Tap ☰ in the app's home screen.

**2** Tap **[User's Guide]**.

**Note:**

- Microsoft® Windows® Internet Explorer® 8 and earlier versions are not supported.
- Android 4.1 or later versions are recommended.
- You can also access the User's Guide at the web page listed below.

**https://panasonic.net/cns/pcc/support/homehawk/manual/**



HN7001_(en_en)_1228_ver.030.pdf 31 2017/12/28 16:21:53

## Specifications

- **Standards**
  **Wireless LAN:**
  IEEE 802.11b/g
- **Frequency range**
  **Wireless LAN:**
  2.412 GHz – 2.462 GHz (channels 1 – 11)
- **RF transmission power**
  **Wireless LAN:**
  **Access point:**
  200 mW (peak transmission power)
  **Front door camera/Outdoor camera:**
  100 mW (peak transmission power)
- **Encryption**
  WPA™/WPA2™-PSK (AES)
- **Power source**
  **Access point:**
  120 V AC, 60 Hz
  **Front door camera/Outdoor camera:**
  5.0 V, 1.0 A*1
- **Power consumption**
  **Access point:**
  Standby: 1.2 W
  Maximum: 6 W
- **Battery performance**
  **Front door camera/Outdoor camera:**
  Operating time: 8 hours
  Standby: xx hours
- **Operating conditions**
  **Access point:**
  0 °C – 40 °C (32 °F – 104 °F)
  20 % – 80 % relative air humidity (dry)
  **Front door camera/Outdoor camera:**
  -20 °C – 50 °C (-4 °F – 122 °F)
  up to 90 % relative air humidity (non-condensing)
- **Transmitting range**
  **Front door camera:**
  100 m (300 feet) outdoors
  **Outdoor camera:**
  30 m (100 feet) indoors
  100 m (300 feet) outdoors
- **Image sensor**
  **Front door camera/Outdoor camera:**
  1.0 megapixel CMOS
- **Minimum illuminance required*2**
  **Front door camera/Outdoor camera:**
  IR-LED: 0 lx*2
  White LED: 1 lx*2
- **Focal length**
  **Front door camera/Outdoor camera:**
  Fixed 0.2 m (0.7 feet – infinity)
- **Angular field of view (camera angle)**
  **Front door camera/Outdoor camera:**
  Horizontal: 150°
  Vertical: 85°
- **Motion detection method**
  Pyroelectric infrared sensor (PIR sensor) and visual sensor
- **PIR sensor detection range (when the surrounding temperature is approx. 25 °C (77 °F))**
  **Front door camera:**
  Horizontal: 170°
  Vertical: 36°
  Detection range: 2.5 m
  **Outdoor camera:**
  Horizontal: 170°
  Vertical: 19.1°
  Detection range: 5 m
- **Visual sensor detection range**
  **Front door camera/Outdoor camera:**
  Horizontal: 150°
  Vertical: 90°
- **Adjustable mounting angles*3**
  **Front door camera:**
  Vertical: facing forward – facing down approx. 47.7° (when mounting to a wall with the wall mounting adaptor)
- **IP rating**
  **Front door camera/Outdoor camera:**
  IP65*4
- **Dimensions (height × width × depth)**
  **Access point:**
  Approx. 179 mm × 94 mm × 52 mm (7 1/16 inches × 3 11/16 inches × 2 1/16 inches)
  **Front door camera:**
  Approx. 58 mm × 271 mm × 61 mm (2 5/16 inches × 10 11/16 inches × 2 3/8 inches) including the wall mounting adaptor
  **Outdoor camera:**
  Approx. 97.7 mm × 71 mm × 93.9 mm (3 7/8 inches × 2 13/16 inches × 3 11/16 inches)
- **Mass (weight)**
  **Access point:**
  Approx. 196 g (0.43 lb)
  **Front door camera:**



HN7001_(en_en)_1228_ver.030.pdf 32 2017/12/28 16:21:53

Approx. 394 g (0.87 lb) including the wall mounting adaptor
**Outdoor camera:**
Approx. xx g (xx lb)

*1 Only when charging.
*2 The infrared LEDs that surround the camera lens will illuminate in low-light conditions.
*3 Adjustable when mounting.
*4 Water resistance is only assured if the camera is installed correctly according to the instructions in the Installation Guide, and appropriate water protection measures are taken.

## Open source software notice for access point

- Parts of this product use open source software supplied based on the relevant conditions of the Free Software Foundation's GPL and/or LGPL and other conditions. Please read all licence information and copyright notices related to the open source software used by this product. This information is available at the following web page:
  https://panasonic.net/cns/pcc/support/homehawk
  At least three (3) years from delivery of this product, Panasonic Corporation will give to any third party who contacts us at the contact information provided below, for a charge of no more than the cost of physically distributing source code, a complete machine-readable copy of the corresponding source code and the copyright notices covered under the GPL and the LGPL. Please note that software licensed under the GPL and the LGPL is not under warranty.
  https://panasonic.net/cns/pcc/support/homehawk

## Software information for access point

- The End User License Agreement (EULA) for the HomeHawk app is available at the following web page:
  https://panasonic.net/cns/pcc/support/homehawk



HN7001_(en_en)_1228_ver.030.pdf 33 2017/12/28 16:21:53

## FCC and other information

This device complies with Part 15 of the FCC Rules. Operation is subject to the following two conditions:
(1) This device may not cause harmful interference, and (2) this device must accept any interference received, including interference that may cause undesired operation.
Privacy of communications may not be ensured when using this device.

**CAUTION:**
Any changes or modifications not expressly approved by the party responsible for compliance could void the user's authority to operate this device.

**NOTE:**
This equipment has been tested and found to comply with the limits for a Class B digital device, pursuant to Part 15 of the FCC Rules. These limits are designed to provide reasonable protection against harmful interference in a residential installation. This equipment generates, uses, and can radiate radio frequency energy and, if not installed and used in accordance with the instructions, may cause harmful interference to radio communications. However, there is no guarantee that interference will not occur in a particular installation. If this equipment does cause harmful interference to radio or television reception, which can be determined by turning the equipment off and on, the user is encouraged to try to correct the interference by one or more of the following measures:
– Reorient or relocate the receiving antenna.
– Increase the separation between the equipment and receiver.
– Connect the equipment into an outlet on a circuit different from that to which the receiver is connected.
– Consult the dealer or an experienced radio/TV technician for help.

Some devices operate at frequencies that may cause interference to nearby TVs and VCRs. To minimize or prevent such interference, this device should not be placed near or on top of a TV or VCR. If interference is experienced, move this device further away from the TV or VCR. This will often reduce or eliminate interference.

**FCC RF Exposure Warning:**
- This product complies with FCC radiation exposure limits set forth for an uncontrolled environment.
- To comply with FCC RF exposure requirements, the device must be installed and operated 20 cm (8 inches) or more between the product and all person's body.
- This product may not be collocated or operated in conjunction with any other antenna or transmitter.
- For body-worn operation, the device must be used only with a non-metallic accessory. Use of other accessories may not ensure compliance with FCC RF exposure requirements.

**FCC Declaration of Conformity**

Trade Name: Panasonic
Model Number: KX-HNB700
Responsible Party:
Panasonic Corporation of North America
Two Riverfront Plaza,
Newark, NJ 07102-5490
http://www.panasonic.com/contactinfo

**FCC Warning:**
To ensure compliance with FCC emissions limits, use only the provided USB cable with ferrite core when connecting the unit to a computer.

**Notice:**
- FCC ID can be found on the following locations.
  Access point: bottom of the unit
  Outdoor camera: rear of the unit



HN7001_(en_en)_1228_ver.030.pdf 34 2017/12/28 16:21:53

## Customer services

# Shop Accessories!

for all your Panasonic gear

Go to

http://shop.panasonic.com/support

Get everything you need to get the most out of your Panasonic products

Accessories & Parts for your Camera, Phone, A/V products, TV, Computers & Networking, Personal Care, Home Appliances, Headphones, Batteries, Backup Chargers & more…

## Customer Services Directory

For Product Information, Operating Assistance, Parts, Owner's Manuals, Dealer and Service info go to http://shop.panasonic.com/support

You may also contact us directly at: 1-800-272-7033,

Monday - Friday 9 am to 9 pm;

Saturday - Sunday 10 am to 7 pm, EST.

For the hearing or speech impaired TTY: 1- 877-833-8855

**As of June 2015**



HN7001_(en_en)_1228_ver.030.pdf 35 2017/12/28 16:21:54

## Limited Warranty (ONLY FOR U.S.A.)

# Panasonic Products Limited Warranty

### Limited Warranty Coverage (For USA Only)

If your product does not work properly because of a defect in materials or workmanship, Panasonic Corporation of North America (referred to as “the warrantor”) will, for the length of the period indicated on the chart below, which starts with the date of original purchase (“warranty period”), at its option either (a) repair your product with new or refurbished parts, (b) replace it with a new or a refurbished equivalent value product, or (c) refund your purchase price. The decision to repair, replace or refund will be made by the warrantor.

| Product or Part Name | Parts | Labor |
|---|---|---|
| Home Network System Products | One (1) Year | One (1) Year |
| microSD card (Included model only) | 90 days | N/A |

During the “Labor” warranty period there will be no charge for labor. During the “Parts” warranty period, there will be no charge for parts. This Limited Warranty excludes both parts and labor for non-rechargeable batteries, antennas, and cosmetic parts (cabinet). This warranty only applies to products purchased and serviced in the United States. This warranty is extended only to the original purchaser of a new product which was not sold “as is”.

**Mail-In Service--**Online Repair Request

### Online Repair Request

To submit a new repair request and for quick repair status visit our Web Site at http://shop.panasonic.com/support

When shipping the unit, carefully pack, include all supplied accessories listed in the Owner’s Manual, and send it prepaid, adequately insured and packed well in a carton box. When shipping Lithium Ion batteries please visit our Web Site at http://shop.panasonic.com/support as Panasonic is committed to providing the most up to date information. Include a letter detailing the complaint, a return address and provide a daytime phone number where you can be reached. A valid registered receipt is required under the Limited Warranty.

**IF REPAIR IS NEEDED DURING THE WARRANTY PERIOD, THE PURCHASER WILL BE REQUIRED TO FURNISH A SALES RECEIPT/PROOF OF PURCHASE INDICATING DATE OF PURCHASE, AMOUNT PAID AND PLACE OF PURCHASE. CUSTOMER WILL BE CHARGED FOR THE REPAIR OF ANY UNIT RECEIVED WITHOUT SUCH PROOF OF PURCHASE.**

## Limited Warranty Limits and Exclusions

This warranty ONLY COVERS failures due to defects in materials or workmanship, and DOES NOT COVER normal wear and tear or cosmetic damage. The warranty ALSO DOES NOT COVER damages which occurred in shipment, or failures which are caused by products not supplied by the warrantor, or failures which result from accidents, misuse, abuse, neglect, mishandling, misapplication, alteration, faulty installation, set-up adjustments, misadjustment of consumer controls, improper maintenance, power line surge, lightning damage, modification, introduction of sand, humidity or liquids, commercial use such as hotel, office, restaurant, or other business or rental use of the product, or service by anyone other than a Factory Service Center or other Authorized Servicer, or damage that is attributable to acts of God.

**THERE ARE NO EXPRESS WARRANTIES EXCEPT AS LISTED UNDER "LIMITED WARRANTY COVERAGE".**

**THE WARRANTOR IS NOT LIABLE FOR INCIDENTAL OR CONSEQUENTIAL DAMAGES RESULTING FROM THE USE OF THIS PRODUCT, OR ARISING OUT OF ANY BREACH OF THIS WARRANTY.**

(As examples, this excludes damages for lost time, travel to and from the servicer, loss of or damage to media or images, data or other memory or recorded content. The items listed are not exclusive, but for illustration only.)

**ALL EXPRESS AND IMPLIED WARRANTIES, INCLUDING THE WARRANTY OF MERCHANTABILITY, ARE LIMITED TO THE PERIOD OF THE LIMITED WARRANTY.**

Some states do not allow the exclusion or limitation of incidental or consequential damages, or limitations on how long an implied warranty lasts, so the exclusions may not apply to you. This warranty gives you specific legal rights and you may also have other rights which vary from state to state. If a problem with this product develops during or after the warranty period, you may contact your dealer or Service Center. If the problem is not handled to your satisfaction, then write to:

Consumer Affairs Department
Panasonic Corporation of North America
661 Independence Pkwy
Chesapeake, VA 23320

**PARTS AND SERVICE, WHICH ARE NOT COVERED BY THIS LIMITED WARRANTY, ARE YOUR RESPONSIBILITY.**

**As of June 2015**



HN7001_(en_en)_1228_ver.030.pdf 37 2017/12/28 16:21:54

## *Notes*



HN7001_(en_en)_1228_ver.030.pdf 38 2017/12/28 16:21:54

HN7001_(en_en)_1228_ver.030.pdf 39 2017/12/28 16:21:54

# IMPORTANT!

**If your product is not working properly. . .**

① **Reconnect the AC adaptor to the access point.**
② **Turn the power switch of the camera ON/OFF.**
③ Use the **HomeHawk app** to access the **User's Guide.** and refer to the **Troubleshooting** section.

**Visit our Web site: http://shop.panasonic.com/support**
**• FAQ and troubleshooting hints are available.**

**For your future reference**
We recommend keeping a record of the following information to assist with any repair under warranty.

| Serial No. | Date of purchase |
|---|---|
| (found on the bottom of the access point or the rear of the outdoor camera)<br>Name and address of dealer | |

Attach your purchase receipt here.

Panasonic Corporation of North America
Two Riverfront Plaza, Newark, NJ 07102-5490

© Panasonic Corporation 2017