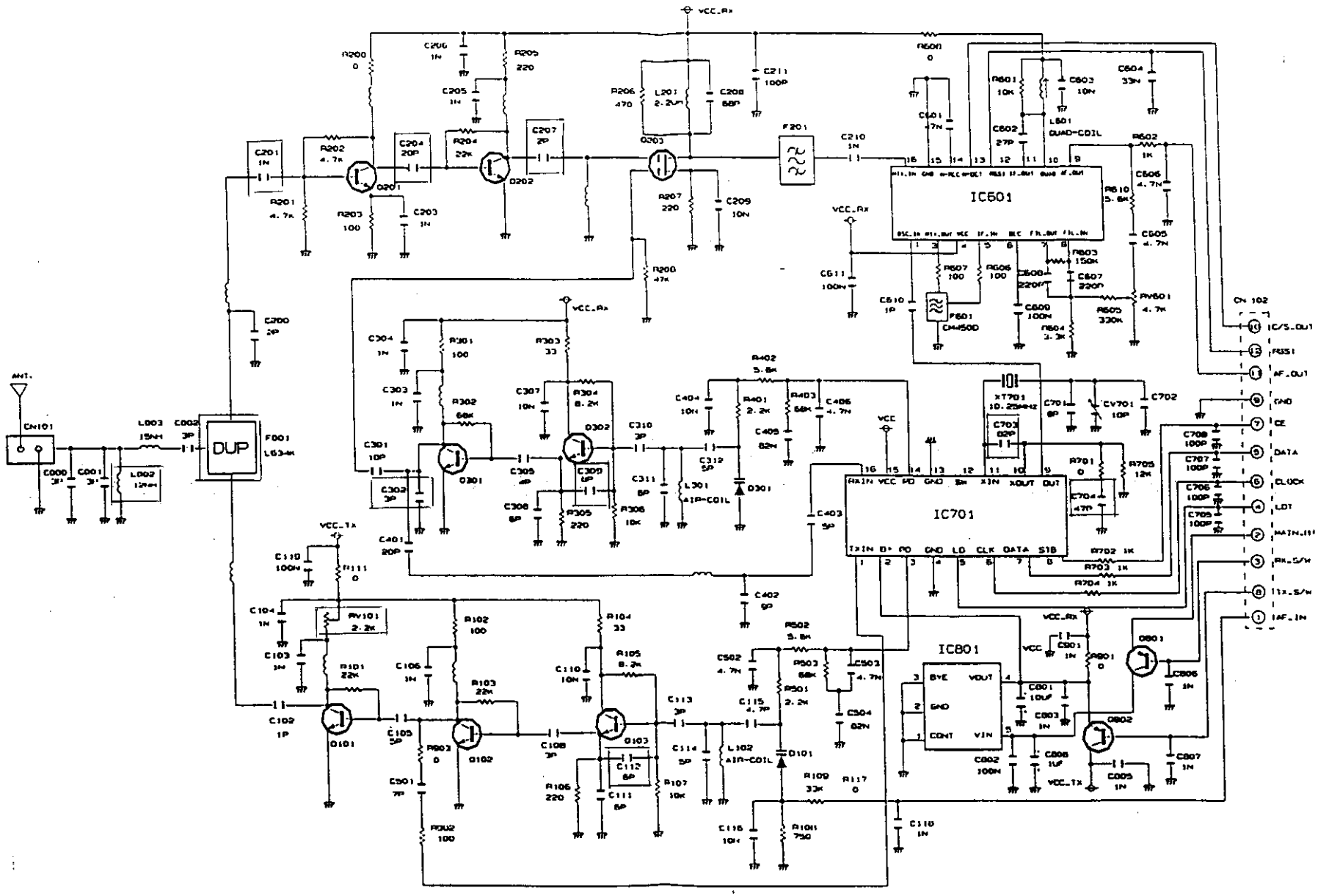
ANT.
CN101
DUP
F001
IC601
IC701
IC801
VCC_RX
VCC_TX
VCC
CN 102
IC/S.OUT
RSSI
AF.OUT
GND
CE
DATA
CLOCK
LDT
MAIN.IN
RX.S/W
TX.S/W
TAF.IN
QUAD-COIL
AIR-COIL
CH450D
XT701
10.25MHz
RAIN
XIN
XOUT
DOUT
TXIN
LD
CLK
STB
BYE
VOUT
CONT
VIN

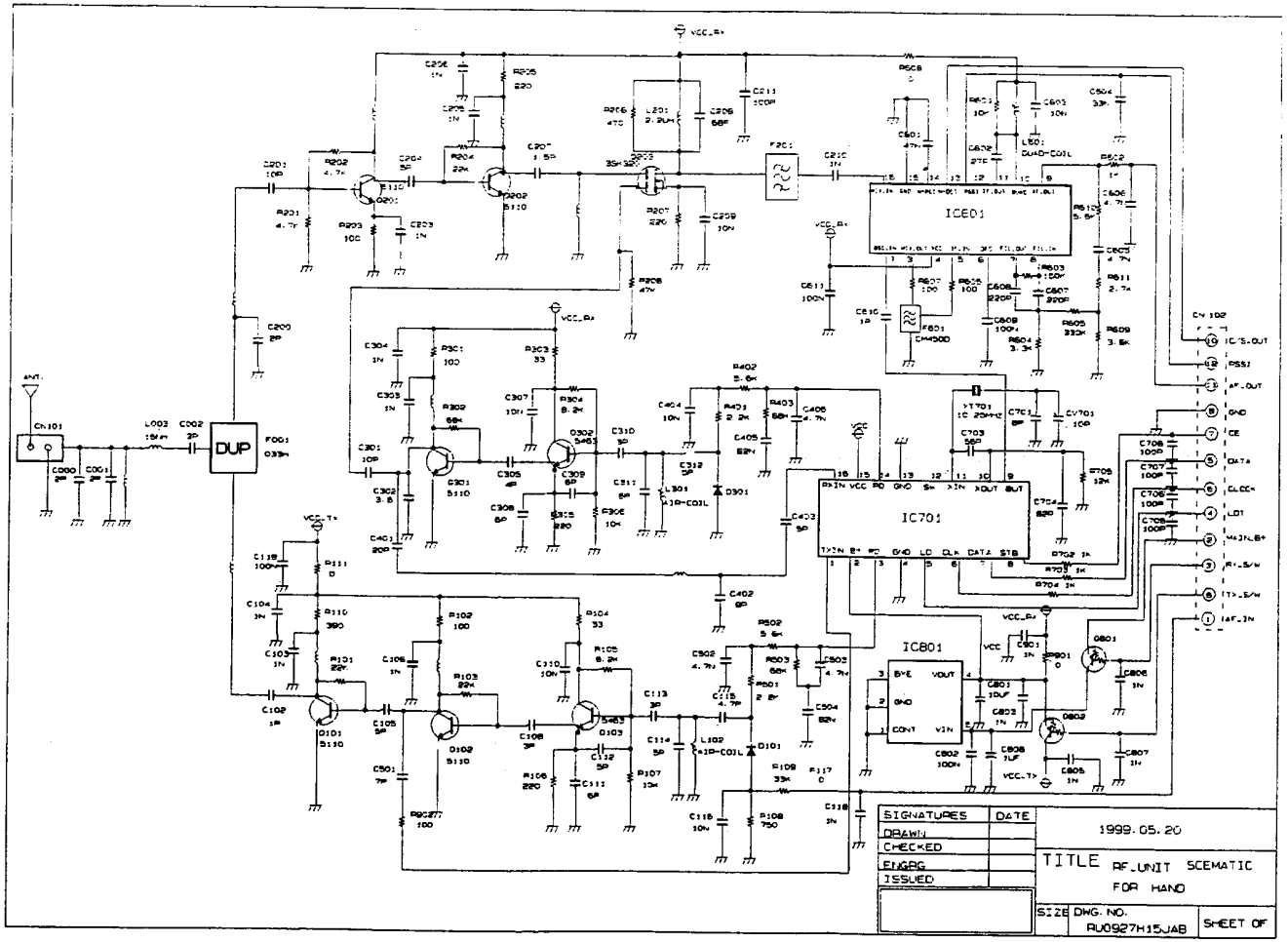
ANT.
CN101
DUP
IC601
IC701
IC801
CN102
IC/S.OUT
PSSI
AF.OUT
GND
CE
DATA
CLOCK
LD1
MAINLB+
RX.S/W
TX.S/W
AF.IN
VCC_RX
VCC_TX
SIGNATURES
DATE
DRAWN
CHECKED
ENGRG
ISSUED
1999.05.20
TITLE
RF.UNIT SCEMATIC
FOR HAND
SIZE
DWG. NO.
RU0927H15JAB
SHEET OF