Panasonic®

Operating Instructions

Amplified Cordless Telephone

Model No. **KX-TGM430**
KX-TGM460

Bluetooth®

Before initial use, see "Getting Started" on page 13.

Thank you for purchasing a Panasonic product.

Please read these operating instructions before using the unit and save them for future reference.

Consulte "Guía Rápida Española", página 96.

For assistance, visit our Web site: **http://shop.panasonic.com/support** for customers in the U.S.A.

Please register your product: http://shop.panasonic.com/support

Introduction
Model composition 4
Accessory information 4
Graphical symbols for use on equipment and their descriptions 7

Important Information
For your safety 8
Important safety instructions 10
For best performance 10
Other information 11
Specifications 12

Getting Started
Setting up 13
Controls 18
Display icons/Indicators 21
Language settings 23
Date and time 24
Recording your greeting message 24
Other settings 25

Accessibility
Accessibility 26
Tone control 26
Volume booster 27
Speech booster (making your voice louder) 29
Talking keypad and phonebook 29
Key tones 30
Message indicator 31
Slow talk 32
Using assistive listening devices 32

Link to Cell
Link to cell feature 35
Pairing a cellular phone 35
Link to cell settings 36

Making/Answering Calls
Making cellular calls 39
Making landline calls 40
Answering calls 40
Useful features during a call 41
Intercom 44

Call Block
Call block 46
Storing unwanted callers 46

Phonebook
Phonebook 49
Memory dial 51

Programming
Menu list 53
Alarm 62
Silent mode 63
Other programming 63
Registering a unit 64

Caller ID Service
Using Caller ID service 65
Caller list 65

Using Bluetooth® Devices
Copying phonebook from a cellular phone (phonebook transfer) 68

Link to Cell app 69
Text message (SMS) alert 70
Alert settings for your DECT phone 70
Using a Bluetooth headset (optional) 71

Answering System for Landline
Answering system for landline 73
Turning the answering system on/off 73
Greeting message 73
Listening to messages 74
Advanced new message alerting features 76
Remote operation 77
Answering system settings …78

Useful Information
Voicemail service for landline 80
Wall mounting 81
Error messages 83
Troubleshooting 84
FCC and other information …93

Guía Rápida Española
Guía Rápida Española 96

Appendix
Customer services 109
Limited Warranty (ONLY FOR U.S.A.) 110

Index
Index.....112

Model composition

Series	Model No.	Base unit	Handset	
		Part No.	Part No.	Quantity
KX-TGM430 series	KX-TGM430	KX-TGM430	KX-TGMA44	1
KX-TGM460 series	KX-TGM460	KX-TGM460	KX-TGMA45	1

Accessory information

Supplied accessories

No.	Accessory item/Part number	Quantity
①	AC adaptor*1, *2	1
②	Telephone line cord/PQJA10075Y*2	1
③	Wall mounting adaptor/PNKL1001X1	1
④	Base battery cover*3/PNYNTGM460MH	1
⑤	Rechargeable batteries*4, *5	4
⑥	Handset cover*6/PNYNTGMA44BR	1
⑦	Belt clip*7/PNKE2076Z2	1

*1 PNLV226-0X: KX-TGM430
PNLV236-0Y: KX-TGM460
*2 The AC adaptor and telephone line cord come connected to the base unit at the time of shipment.
*3 The base battery cover comes attached to the handset at the time of shipment.
*4 The supplied rechargeable batteries in the handset and base unit are installed with yellow insulation sheets inserted between battery ends and the terminals at the time of shipment. Remove the yellow insulation sheets before use.
*5 See page 5 for replacement battery information.
*6 The handset cover comes attached to the handset at the time of shipment.
*7 The belt clip comes attached to the handset at the time of shipment.

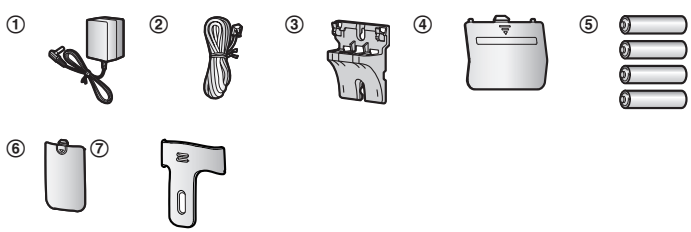

Additional/replacement accessories

Please contact your nearest Panasonic dealer for sales information (page 109).

Accessory item	Model number/Specifications
Rechargeable batteries	HHR-4DPA*1 ● To order, please visit http://shop.panasonic.com/support
	Battery type: – Nickel metal hydride (Ni-MH) – 2 x AAA (R03) size for each handset
Headset	KX-TCA93, KX-TCA430
Range extender	KX-TGA407*2
Key detector	KX-TGA20*3

*1 Replacement batteries may have a different capacity from that of the supplied batteries.
*2 By installing this unit, you can extend the range of your phone system to include areas where reception was previously not available. This product can be purchased online. Please visit our Web site: http://shop.panasonic.com/support
*3 By registering the key detector (4 max.) to a Panasonic Digital Cordless Phone and attaching it to an easy-to-lose item in advance, you can locate and find the mislaid item to which the key detector is attached. Please visit our Web site: http://www.panasonic.com/tga20

Other information

- Design and specifications are subject to change without notice.
- The illustrations in these instructions may vary slightly from the actual product.

Expanding your phone system

Handset (optional): KX-TGMA44*1/KX-TGMA45*2	
You can expand your phone system by registering optional handsets (6 max.) to a single base unit. ● Optional handsets may be a different color from that of the supplied handsets. ● To order, please visit http://shop.panasonic.com/support	

*1 Maximum receiver volume is 40 dB (when the booster is on).
*2 Maximum receiver volume is 50 dB (when the booster is on).

Bluetooth® devices

You can expand your phone system by pairing the following units to a single base unit.

Your Bluetooth cellular phone*1: 2 max. (for cellular calls: page 35)	
Your Bluetooth headset*1: 1 max. (for a wireless hands-free conversation: page 71)	

*1 Your cellular phone and headset must be Bluetooth wireless technology compatible. For more details and the list of compatible cellular phones, please visit our Web site: http://shop.panasonic.com/bluetooth-phone

Trademarks

- The Bluetooth® word mark and logos are registered trademarks owned by Bluetooth SIG, Inc. and any use of such marks by Panasonic Corporation is under license.
- iPhone is a registered trademarks of Apple Inc.
- Android, Gmail and Google Calendar are trademarks of Google LLC.
- Facebook and Instagram are trademarks of Facebook, Inc.
- Twitter is trademark of Twitter Inc.
- All other trademarks identified herein are the property of their respective owners.

Graphical symbols for use on equipment and their descriptions

Symbol	Explanation	Symbol	Explanation
~	Alternating current (A.C.)	⧈	Class II equipment (equipment in which protection against electric shock relies on Double Insulation or Reinforced Insulation)
⎓	Direct current (D.C.)	|	“ON” (power)
⏚	Protective earth	○	“OFF” (power)
⏚	Protective bonding earth	⏻	Stand-by (power)
⏚	Functional earth	⏽	“ON”/“OFF” (power; push-push)
⌂	For indoor use only	⚠	Caution, risk of electric shock

For your safety

To prevent severe injury and loss of life/property, read this section carefully before using the product to ensure proper and safe operation of your product.

⚠WARNING

Power connection

- Use only the power source marked on the product.
- Do not overload power outlets and extension cords. This can result in the risk of fire or electric shock.
- Completely insert the AC adaptor/power plug into the power outlet. Failure to do so may cause electric shock and/or excessive heat resulting in a fire.
- Regularly remove any dust, etc. from the AC adaptor/power plug by pulling it from the power outlet, then wiping with a dry cloth. Accumulated dust may cause an insulation defect from moisture, etc. resulting in a fire.
- Unplug the product from power outlets if it emits smoke, an abnormal smell, or makes an unusual noise. These conditions can cause fire or electric shock. Confirm that smoke has stopped emitting and contact us at http://shop.panasonic.com/support
- Unplug from power outlets and never touch the inside of the product if its casing has been broken open.
- Never touch the plug with wet hands. Danger of electric shock exists.

Installation

- To prevent the risk of fire or electrical shock, do not expose the product to rain or any type of moisture.
- Do not place or use this product near automatically controlled devices such as automatic doors and fire alarms. Radio waves emitted from this product may cause such devices to malfunction resulting in an accident.
- Do not allow the AC adaptor or telephone line cord to be excessively pulled, bent or placed under heavy objects.

Operating safeguards

- Unplug the product from power outlets before cleaning. Do not use liquid or aerosol cleaners.
- Do not disassemble the product.
- Do not spill liquids (detergents, cleansers, etc.) onto the telephone line cord plug, or allow it to become wet at all. This may cause a fire. If the telephone line cord plug becomes wet, immediately pull it from the telephone wall jack, and do not use.
- To prevent hearing damage, make sure anyone who uses this product is aware that the product can produce very loud sounds, and make sure children use this product only under adult supervision.
- To prevent hearing damage, we recommend that you set this product to the lowest volume setting at which you can hear adequately. Note that when the BOOST indicator is lit in red, the volume booster feature is enabled and the product may emit sounds at very high volume.
- Avoid prolonged exposure to loud sounds produced by this product. Be aware that the louder a sound is, the less time is needed to cause hearing damage. In the event that you experience hearing discomfort, consult a medical professional.

Medical

- Consult the manufacturer of any personal medical devices, such as pacemakers or hearing aids, to determine if they are adequately shielded from external RF (radio frequency) energy. (The product operates in the frequency range of 1.92 GHz to 1.93 GHz, and the RF transmission power is 115 mW (max.).)
- Do not use the product in health care facilities if any regulations posted in the area instruct you not to do so. Hospitals or health care facilities may be using equipment that could be sensitive to external RF energy.

⚠CAUTION

Installation and location

- Never install telephone wiring during an electrical storm.
- Never install telephone line jacks in wet locations unless the jack is specifically designed for wet locations.
- Never touch uninsulated telephone wires or terminals unless the telephone line has been disconnected at the network interface.
- Use caution when installing or modifying telephone lines.
- The AC adaptor is used as the main disconnect device. Ensure that the AC outlet is installed near the product and is easily accessible.
- This product is unable to make calls when:
  - the handset batteries need recharging or have failed.
  - there is a power failure.

Ni-MH rechargeable batteries (supplied)

- We recommend using the batteries noted on page 5. **USE ONLY rechargeable Ni-MH batteries AAA (R03) size.**
- Do not mix old and new batteries.
- Do not open or mutilate the batteries. Released electrolyte from the batteries is corrosive and may cause burns or injury to the eyes or skin. The electrolyte is toxic and may be harmful if swallowed.
- Exercise care when handling the batteries. Do not allow conductive materials such as rings, bracelets, or keys to touch the batteries, otherwise a short circuit may cause the batteries and/or the conductive material to overheat and cause burns.
- Charge the batteries provided with or identified for use with this product only, in accordance with the instructions and limitations specified in this manual.
- Only use a compatible base unit (or charger) to charge the batteries. Do not tamper with the base unit (or charger). Failure to follow these instructions may cause the batteries to swell or explode.

Attention:

A nickel metal hydride battery that is recyclable powers the product you have purchased.
Please call 1-800-8-BATTERY (1-800-822-8837) for information on how to recycle this battery.

Note when using alkaline batteries for power backup

- The batteries should be used correctly, otherwise the unit may be damaged due to battery leakage.
- Do not charge, short-circuit, disassemble, or heat the batteries.
- Do not dispose of batteries in a fire.
- Remove all the batteries when replacing.
- Do not mix old, new or different types of batteries.
- It is recommended that batteries are replaced annually.

Important safety instructions

When using your product, basic safety precautions should always be followed to reduce the risk of fire, electric shock, and injury to persons, including the following:

1. Do not use this product near water for example, near a bathtub, washbowl, kitchen sink, or laundry tub, in a wet basement or near a swimming pool.
2. Avoid using a telephone (other than a cordless type) during an electrical storm. There may be a remote risk of electric shock from lightning.
3. Do not use the telephone to report a gas leak in the vicinity of the leak.
4. Use only the power cord and batteries indicated in this manual. Do not dispose of batteries in a fire. They may explode. Check with local codes for possible special disposal instructions.

SAVE THESE INSTRUCTIONS

For best performance

Base unit location/avoiding noise

The base unit and other compatible Panasonic units use radio waves to communicate with each other.

- For maximum coverage and noise-free communications, place your base unit:
  - at a convenient, high, and central location with no obstructions between the handset and base unit in an indoor environment.
  - away from electronic appliances such as TVs, radios, personal computers, wireless devices, or other phones.
  - facing away from radio frequency transmitters, such as external antennas of mobile phone cell stations. (Avoid putting the base unit on a bay window or near a window.)
- Coverage and voice quality depends on the local environmental conditions.
- If the reception for a base unit location is not satisfactory, move the base unit to another location for better reception.

Environment

- Keep the product away from electrical noise generating devices, such as fluorescent lamps and motors.
- The product should be kept free from excessive smoke, dust, high temperature, and vibration.
- The product should not be exposed to direct sunlight.
- Do not place heavy objects on top of the product.
- When you leave the product unused for a long period of time, unplug the product from the power outlet.

- The product should be kept away from heat sources such as heating devices, cooking appliances, etc. It should not be placed in rooms where the temperature is less than 0 °C (32 °F) or greater than 40 °C (104 °F). Damp basements should also be avoided.
- The maximum calling distance may be shortened when the product is used in the following places: Near obstacles such as hills, tunnels, underground, near metal objects such as wire fences, etc.
- Operating the product near electrical appliances may cause interference. Move away from the electrical appliances.

Routine care

- **Wipe the outer surface of the product with a soft moist cloth.**
- Do not use benzine, thinner, or any abrasive powder.

Other information

CAUTION: Risk of explosion if battery is replaced by an incorrect type. Dispose of used batteries according to the instructions.

Notice for product disposal, transfer, or return

- This product can store your private/confidential information. To protect your privacy/confidentiality, we recommend that you erase information such as phonebook or caller list entries from the memory before you dispose of, transfer, or return the product.

Notice

- This product is designed for use in the United States of America. Sale or use of this product in other countries may violate local laws.
- Cet appareil est conçu pour être utilisé aux États-Unis d'Amérique. La vente ou l'emploi de cet appareil dans certains autres pays peut constituer une infraction à la législation locale.
- Este producto está diseñado para usarse en los Estados Unidos de América. La venta o el empleo de este producto en ciertos países puede constituir violación de la legislación local.
- 本產品專為美國使用而設。若在其他國家銷售或使用，可能會違反當地法例。
- この製品は、日本国外での使用を目的として設計されており、日本国内での使用は法律違反となります。従って、当社では日本国内においては 原則として修理などのサービスは致しかねます。

Specifications

- **Standard:**
  Bluetooth wireless technology 2.1
  – Hands Free Profile (HFP)
  – Headset Profile (HSP)
  – Phone Book Access Profile (PBAP)
  – Object Push Profile (OPP)
  – Serial Port Profile (SPP)
  – Message Access Profile (MAP)
- **Frequency range:**
  1.92 GHz to 1.93 GHz (DECT)
  2.402 GHz to 2.48 GHz (Bluetooth)
- **RF transmission power:**
  115 mW (max.)
- **Power source:**
  120 V AC, 60 Hz
- **Power consumption:**
  Base unit*1:
  Standby: 1.0 W
  Maximum: 4.5 W
  Base unit*2:
  Standby: 1.2 W
  Maximum: 8.5 W
- **Operating conditions:**
  0 °C – 40 °C (32 °F – 104 °F), 20 % – 80 % relative air humidity (dry)

*1 KX-TGM430
*2 KX-TGM460

Setting up

Connections

- If you do not connect the telephone line cord and use only cellular lines, set the cellular line only mode to use this unit more conveniently (page 37).

① Connect the AC adaptor to the unit by pressing the plug firmly.
② Fasten the cord by hooking it.
③ Connect the AC adaptor to the power outlet.
④ Connect the telephone line cord to the unit, then to the single-line telephone jack (RJ11C) until you hear a click.
⑤ A DSL/ADSL filter (not supplied) is required if you have a DSL/ADSL service.

Note:

- The AC adaptor and telephone line cord come connected to the base unit at the time of shipment.
- Use only the supplied Panasonic AC adaptor.*1

*1 PNLV226: KX-TGM430
PNLV236: KX-TGM460

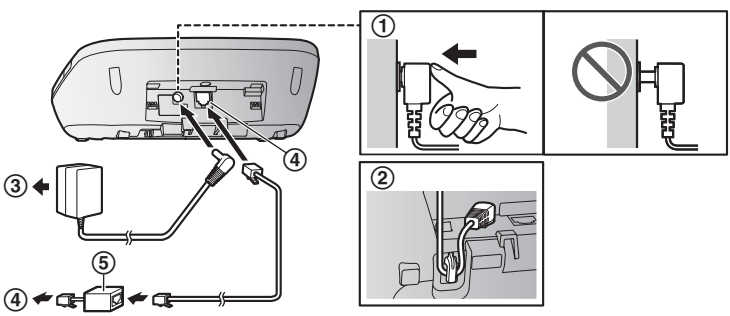

Handset battery charging

2 rechargeable Ni-MH batteries are installed in the handset at the time of shipment.

Before initial use: Remove the yellow insulation sheet before using the handset.

Charge for about 7 hours.

- Confirm "**Charging**" is displayed (Ⓐ).
- When the batteries are fully charged, "**Fully charged**" is displayed.

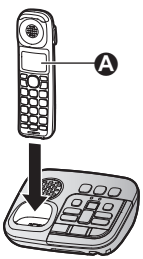

- Follow the directions on the display to set up the unit.

Handset battery level

Icon	Battery level
	High
	Medium
	Low
	Needs charging.
	Empty

Ni-MH battery performance

Operation	Operating time
In continuous use	13 hours max.*1
Not in use (standby)	9 days max.*1

*1 If eco mode is on and booster is off.

Note:

- Actual battery performance depends on usage and ambient environment.

Handset battery installation (for replacement)

- USE ONLY rechargeable Ni-MH batteries AAA (R03) size (A).
- Do NOT use alkaline/manganese/Ni-Cd batteries.
- Confirm correct polarities (⊕, ⊖).

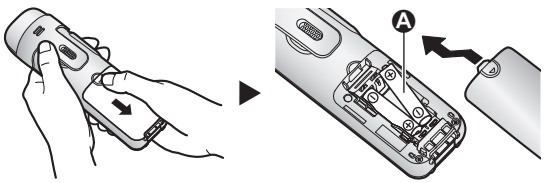

Base unit backup batteries

2 rechargeable Ni-MH batteries are installed in the base unit at the time of shipment. These batteries can be used to supply power to the base unit in the event of a power failure.

Before initial use: Remove the yellow insulation sheet before using the base unit.

Base unit battery status when a power failure occurs

Item	Battery status
PF	Power backup mode is on.*1
PF	Battery power is low.*2

*1 When the base unit is running on battery power, "PF" is displayed on the message counter of the base unit. If there is other information that can be displayed, such as the number of answering system messages, the other information is displayed.

*2 When the base unit is running on battery power and the remaining battery power is too low, "PF" flashes and the base unit beeps. Additionally, the base unit's message indicator flashes.

Ni-MH battery performance when operating on backup battery power

Operation	Operating time
In continuous use	3 hours max.
Not in use (standby)	4 hours max.

Note:

- Battery performance depends on the type of batteries.
- Actual battery performance depends on usage and ambient environment.
- If the base unit is running on battery power, the brightness of the message counter on the base unit is reduced to save battery power.
- When the base unit is running on battery power, the maximum ringer volume of the base unit will be reduced.
- If your phone service provider requires additional devices in order to make and receive calls, such as a modem, you may still not be able to make and receive calls even if the base unit's backup power feature is functioning.

Base unit battery installation (for replacement)

Important:

- The following AAA (R03) size batteries can be used with the base unit:
  - Rechargeable Ni-MH batteries*1
  - Standard (non-rechargeable) alkaline batteries*2
- Do NOT use manganese batteries.
- Confirm correct polarities (⊕, ⊖).

*1 The base unit can fully charge Ni-MH batteries in about 15 hours.
*2 If the rechargeable batteries become depleted during a power failure, you can insert alkaline batteries into the base unit. Remove the alkaline batteries when power is restored.

1 Disconnect the telephone line cord (❶).

2 Open the battery cover (❷).

3 Install the batteries in the battery compartment (❸).

4 Close the cover (❹), then reconnect the telephone line cord (❺).

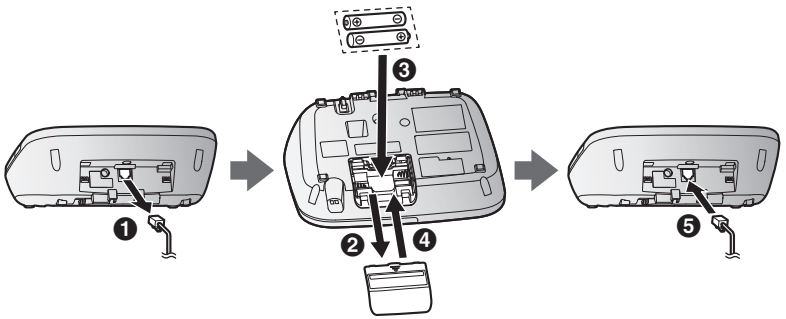

Note when setting up

Note for connections

- The AC adaptor must remain connected at all times. (It is normal for the adaptor to feel warm during use.)
- The AC adaptor should be connected to a vertically oriented or floor-mounted AC outlet. Do not connect the AC adaptor to a horizontally oriented AC outlet that faces the floor, such as an AC outlet installed on a ceiling or under a table, as the weight of the adaptor may cause it to become disconnected.

Note for battery installation

- Use the supplied rechargeable batteries. For replacement, we recommend using the rechargeable batteries noted on page 5, 9.

Note for battery charging

- It is normal for the handset to feel warm during charging.
- Clean the charge contacts of the handset, base unit, and charger with a soft and dry cloth once a month. Before cleaning the unit, disconnect from power outlets and any telephone line cords. Clean more often if the unit is exposed to grease, dust, or high humidity.

Intelligent eco mode

This feature automatically reduces handset power consumption by suppressing handset transmission power when the handset is close to the base unit.

- When this feature is activated, ECO is displayed. However, during a cellular call, ECO is not displayed even though this feature is activated.
- Eco mode is turned off when the sound enhancer is activated (page 42).

Controls

Handset

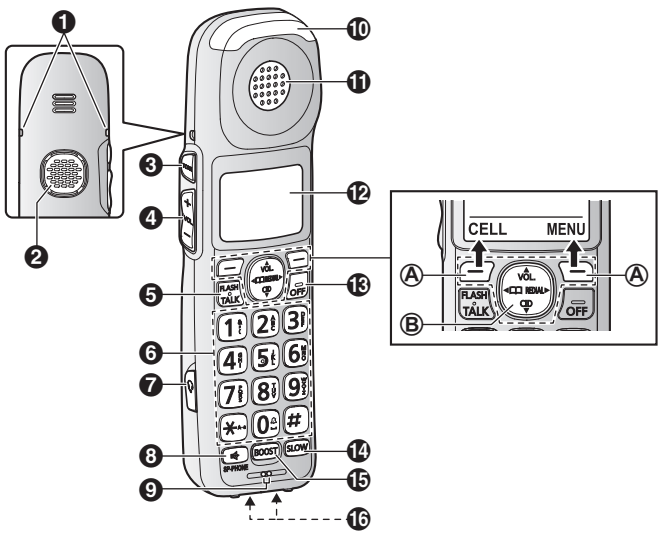

❶ **Belt clip holes**
- The belt clip comes attached to the handset at the time of shipment.

❷ **Speaker**

❸ **【TONE】 (Tone control)**

❹ **【+】/【−】 (VOL.: Volume up/down)**

❺ **【FLASH】**
【TALK】

❻ **Dial keypad**
【✱】: Temporary tone dialing
【0】: (🔕) Ringer off

❼ **Headset jack**
- This jack is used to connect an optional headset (page 5) or a user-supplied neckloop to the handset. You must set the **"Headset type"** setting to match the type of device connected (page 33).

❽ 【🔊】(SP-PHONE: Speakerphone)
❾ Microphone
❿ Message indicator
⓫ Receiver
⓬ Display
⓭ 【OFF】
⓮ 【SLOW】(SLOW TALK)
SLOW TALK indicator
⓯ 【BOOST】
BOOST indicator
- Light off: Volume booster is turned off.
  Light in red: Volume booster is turned on.
  Note that when the BOOST indicator is lit in red, the volume booster feature is enabled and the product may emit sounds at very high volume.

⓰ Charge contacts

■ Control type

Ⓐ **Soft keys**

By pressing a soft key, you can select the feature shown directly above it on the display. After a cellular phone is paired, 【CELL】 is displayed.

Ⓑ **Navigator key**

– 【▲】, 【▼】, 【◄】, or 【►】: Scroll through various lists and items.
– VOL. (Volume: 【▲】 or 【▼】): Adjust the receiver or speaker volume while talking.
– 【◄】 📖: View the phonebook entry.
– 【►】 REDIAL: View the redial list.
– 【▼】 CID (Caller ID): View the caller list.

Base unit

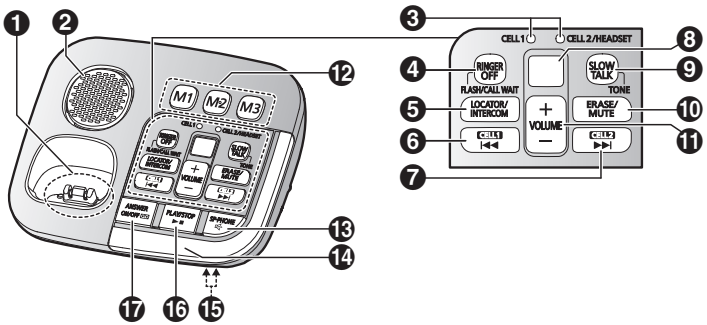

❶ **Charge contacts**
❷ **Speaker**
❸ **CELL 1 indicator**
CELL 2/HEADSET indicator
❹ **【RINGER OFF】**
RINGER OFF indicator
【FLASH/CALL WAIT】
❺ **【LOCATOR/INTERCOM】**
- You can locate a misplaced handset by pressing **【LOCATOR/INTERCOM】**.

❻ **【CELL 1】**
【⏮】 (Repeat)
❼ **【CELL 2】**
【⏭】 (Skip)
❽ **Message counter**
❾ **【SLOW TALK】**
SLOW TALK indicator
【TONE】 (Tone control)
❿ **【ERASE/MUTE】**
⓫ **【+】/【−】 (VOLUME: Volume up/down)**
⓬ **【M1】 (Memory dial 1)**
【M2】 (Memory dial 2)
【M3】 (Memory dial 3)

⓭ 【🔊】(SP-PHONE: Speakerphone)
SP-PHONE indicator (🔊)
⓮ Message indicator
⓯ Microphone
⓰ 【►■】(PLAY/STOP)
New Message/Play indicator (►)
⓱ 【ANSWER ON/OFF】
ANSWER ON/OFF indicator (📼)

Display icons/Indicators

Handset display items

Item	Meaning
	Within base unit range
	Out of base unit range
	Sound enhancer is on. (page 42)
	The landline is in use. ● When flashing: The call is put on hold. ● When flashing rapidly: An incoming call is now being received.
1 2	A cellular line is in use.*1 ● When flashing: The cellular call is put on hold. ● When flashing rapidly: A cellular call is being received.
	Speech booster is on. (page 29)
ECO	Eco mode is on.*2 (page 17)
1 2H	1, 2: A cellular phone is connected.*3 Ready to make/receive cellular calls. H: Bluetooth headset is connected.*3 Ready to make/receive landline calls with your headset. ● When 1, 2, or H are not displayed: A cellular phone (1, 2) or Bluetooth headset (H) is not connected to the base unit. (page 37)
C1 C2	– A cellular call is in progress on that line. – The cellular line is selected for the setting.
NR	Noise reduction is set. (page 42)
T1 – T6 CT	Tone control level (Tone 1-6 or Custom tone)
🔊	Speakerphone is on. (page 39)
🔕 1 L	Ringer volume is off.*4 (page 41, 55, 57)

Item	Meaning
Zzz	Silent mode is on. (page 63)
PRIV.	Call sharing mode is off. (page 61)
	Alarm is on. (page 62)
1	Handset number
	Battery level
	Blocked call (page 46)
In use	Answering system is being used by another handset or the base unit.
Cell1 in use	Someone is using the corresponding line.
Cell2 in use	
C1&C2 in use	
Line in use	

*1 Corresponding lines (1, 2: cellular line) are indicated next to the item.
*2 During a cellular call, the item is not displayed even though the feature is activated.
*3 Corresponding lines (1, 2: cellular line, H: Bluetooth headset) are indicated next to the item.
*4 Corresponding lines (1, 2: cellular line, L: landline) are indicated next to the item. If all lines are turned off, no line is indicated.

Base unit display items

Item	Meaning
go	"Greeting only" is selected. Caller messages are not recorded. (page 79)
PF	Power backup mode is on. (page 15)

CELL indicators on the base unit

The CELL indicators show each cellular line status.

Status	Meaning
On	A cellular phone is connected. Ready to make/receive cellular calls.
Flashing	– The cellular line is in use. – Phonebook entries are being copied from a cellular phone (page 68). – The base unit is searching for the paired cellular phone. – The base unit is pairing a cellular phone. – A cellular call is put on hold.
Flashing rapidly	A cellular call is being received.

Status	Meaning
Light off	– A cellular phone is not paired to the base unit. – A cellular phone is not connected to the base unit (page 37).

Bluetooth HEADSET indicator on the base unit

The CELL 2/HEADSET indicator shows the Bluetooth headset status.

Status	Meaning
On	A Bluetooth headset is connected to the base unit. Ready to use it.
Flashing	– A Bluetooth headset is in use. – The base unit is searching for the paired Bluetooth headset. – The base unit is pairing a Bluetooth headset.
Flashing rapidly	A landline call is being received.
Light off	– A Bluetooth headset is not paired to the base unit. – The Bluetooth headset is not connected to the base unit.

Note:

- The CELL 2/HEADSET indicator (page 22) also indicates the status of the Bluetooth headset. If cellular line 2 and the Bluetooth headset are both available, this indicator indicates the status of either cellular line 2 or the Bluetooth headset, depending on their usage conditions.

Language settings

Display language

1 【MENU】#110

2 【▲▼】: Select the desired setting. → 【SAVE】 → 【OFF】

Voice announcement language

You can select the language used for the following features.

– Answering system guidance
– Talking Caller ID
– Talking keypad and phonebook
– Application (App) alert announcement
– Text message (SMS) alert announcement

1 【MENU】#112

2 【▲▼】: Select the desired setting. → 【SAVE】 → 【OFF】
- The setting will be applied in about 5 seconds.

Date and time

1 【MENU】#101

2 Enter the current month, date, and year by selecting 2 digits for each.
Example: July 12, 2016
07 12 16

3 【OK】

4 Enter the current hour and minute (12-hour clock format) by selecting 2 digits for each.
Example: 9:30
09 30

5 ✳: Select "AM" or "PM".

6 【SAVE】 → 【OFF】

Note:
- When English is selected as the display language, 12-hour clock format is used. When Spanish is selected, 24-hour clock format is used.

Recording your greeting message

You can record your own greeting message instead of using a pre-recorded greeting message. See page 73 for details.

1 【MENU】#302

2 【▲▼】: "Yes" → 【SELECT】

3 Record a greeting message. → 【STOP】 → 【OFF】

Other settings

Dialing mode

If you cannot make calls, change this setting according to your telephone line service. The default setting is **"Tone"**.

"Tone": For tone dial service.

"Pulse": For rotary/pulse dial service.

1 **【MENU】#1 2 0**

2 **【▲▼】**: Select the desired setting. → **【SAVE】** → **【OFF】**

Accessibility

This product is designed to provide not only optimal volume, but optimal sound quality as well, ensuring that every call is heard loud and clear.

Tone control

This feature clarifies the voice of the person you are talking to, producing a more natural-sounding voice that is easier to hear and understand. This feature can be set for each unit.
The following settings are available.
Handset:
– Receiver: **"Tone 1-6"** and **"Custom tone 1-20"**
– Speakerphone: **"Tone 1-4"**
– Headset: **"Tone 1-4"** and **"Custom tone 1-20"**
Base unit: **"t 1-4"** (Tone 1-4)

Handset

You can select a tone control setting while talking on the phone. There are two methods available.

■ Using the 【TONE】 key

1 Press 【**TONE**】 on the side repeatedly to select the desired setting while talking.

2 To exit, press 【**BACK**】 or wait for a few seconds.
- The selected setting is shown on the handset display while talking.

Note:
- To select one of the **"Custom tone"** settings, follow the instructions in "Using the 【**MENU**】 key", page 26.

■ Using the 【MENU】 key

1 Press 【**MENU**】 while talking.

2 【▲▼】: **"Tone control"** → 【**SELECT**】

3 【▲▼】: Select the desired setting. → 【OK】
- If you select "Custom tone", select the desired type. → 【OK】
- The selected setting is shown on the handset display while talking.

Base unit

1 Press and hold 【TONE】 for about 2 seconds while talking.

2 Press 【+】 or 【−】 repeatedly to select the desired setting.
- The selected setting flashes on the message counter while talking.

3 To exit, press 【TONE】 or wait for about 5 seconds.

Note for handset and base unit:
- The selected setting is applied immediately and is also used for future calls.
- Depending on the condition and quality of your telephone line, this feature may emphasize existing line noise. If it becomes difficult to hear, reset to the default setting (Tone 2).

Volume booster

This feature allows you to drastically increase the volume of the other party's voice. This feature can be set for each unit.

⚠WARNING
- This feature is designed for users who are hard of hearing. If other users use the phone, be sure to turn this feature off.
- Do not use this feature unnecessarily. High volume emitted from the product may cause hearing damage.
- Pressing the 【BOOST】 key activates the volume booster feature. Use this key with care. At its loudest setting (volume and volume booster features set to their highest settings), the product can output sound at up to 40 dB (KX-TGM430) or 50 dB (KX-TGM460). To prevent hearing damage, we recommend that you set this product to the lowest volume setting at which you can hear adequately.

Turning on the volume booster

1 Press 【BOOST】 while on a call.
- The BOOST indicator lights in red.

2 Press 【+】 or 【−】 on the side repeatedly to select the desired volume.
- The selected volume setting is shown on the handset display while talking.
- The selected volume setting is used for future calls when the booster is turned on.

Note:

- Noise reduction is automatically turned on when the booster is turned on. In this case, the menu that allows you to turn off noise reduction is not shown even after you press **【MENU】** while on a call.
- **NR** is not shown if the noise reduction feature was turned off before you turned on the volume booster.
- If the auto boost feature is turned on (page 28), volume booster turns on automatically when you make or answer a call. If the auto boost feature is turned off, volume booster turns off automatically at the end of each call.

Turning on auto boost

If the auto boost feature is turned on, volume booster turns on automatically when you make or answer a call. This feature is useful if the unit is used mainly by a user who is hard of hearing.

1 **【MENU】#782**

2 **【▲▼】**: Select the desired setting. → **【SAVE】** → **【OFF】**

- If the volume booster is turned on, the BOOST indicator lights in red during a call.

Note:

- While on a call, you can temporarily turn the volume booster off by pressing **【BOOST】**, and adjust the volume by pressing **【+】** or **【−】** on the side repeatedly.

Adjusting the volume

While on a call, you can adjust the volume by pressing **【+】** or **【−】** on the side repeatedly.

- The selected volume setting is shown on the handset display.
- The selected volume setting is applied immediately and is also used for future calls. A separate setting is used for when volume booster is on and when it is off.

Available volume settings

The available settings vary whether volume booster is turned on or off.

BOOST indicator	Volume booster	Available volume settings	Default
Light off	Turned off	Receiver: 1–15	15
		Speakerphone: 1–21	15
		Headset: 1–15	15

BOOST indicator	Volume booster	Available volume settings	Default
Light in red	Turned on	**KX-TGM430 series**	
		Receiver: 12–40	15
		Speakerphone: 18–30	21
		Headset: 12–40	15
		KX-TGM460 series	
		Receiver: 12–50	15
		Speakerphone: 18–40	21
		Headset: 12–50	15

Speech booster (making your voice louder)

This feature allows you to increase the volume of your voice heard by the other party. This feature can be set for each handset.

⚠WARNING

- The speech booster feature can be used to increase the volume of your voice heard by the other party. If this feature is used unnecessarily, your voice may be too loud. We recommend that you use this feature only if your voice is too quiet to be heard by the other party.

1 Press 【**MENU**】 while on a call.

2 【▲▼】: "**Boost speech on**" or "**Boost speech off**" → 【**SELECT**】
- The selected setting is applied immediately and is also used for future calls.

Note:

- You can set this feature in standby mode (page 58).

Talking keypad and phonebook

This feature helps you by announcing the following information as you use the phone.

Handset:

– Phone numbers entered for dialing, phonebook, and memory dial. The unit can announce numbers (0 to 9), special keys (*, #, and 【**FLASH**】), and dialing pauses (【▲】).

– Name or phone numbers when searching the phonebook, caller list, redial list, memory dial entries, and call block list.

Base unit:

– Name or phone numbers when confirming memory dial keys (**【M1】** – **【M3】**).

Setting the talking keypad and phonebook

You can enable this feature by setting its volume to **"High"** or **"Low"**, and disable it by setting its volume to **"Off"**. The default setting is **"Off"**. This feature can be set for each unit.

1 **For handset: 【MENU】#750**
For base unit (using a handset): 【MENU】#*750

2 **【▲▼】**: Select the desired setting. → **【SAVE】** → **【OFF】**

Note:

- If you dial a phone number quickly, the handset may not announce the dialed phone number correctly. For best results, dial slowly, and wait for the handset to announce each number before dialing the next.
- Some names may not be announced properly.
- Talking phonebook is not available in the following situations.
  – When the base unit is in use (on an outside call or using the answering system)
  – When another user is searching the phonebook, caller list, redial list, memory dial, or call block list

Key tones

Use this procedure to change the volume of the tones that sound when you press keys on the handset and base unit, or to turn them off. The default setting is **"Low"**. Includes confirmation tones and error tones, etc. This feature can be set for each unit.

1 **For handset: 【MENU】#165**
For base unit (using a handset): 【MENU】#*165

2 **【▲▼】**: Select the desired setting. → **【SAVE】** → **【OFF】**

Message indicator

The message indicator on the handset and base unit can indicate unit status, as explained below.

Indicator	Status
Flashing rapidly	– Outside call or intercom call is being received or on hold. (page 40, 41, 44) – The handset alarm is sounding. (page 62) – Notifications for Link to Cell app or text message (SMS) alert is being received. (page 70)
Flashing slowly	– There are new messages. (page 74) – There are new voicemails. (page 81) – There are missed calls. (page 65)

Setting the message indicator

You can enable and disable the message indicator for each type of status.

– **"Incoming call"** (default: On)
– **"New message"** (default: On)
– **"New VM"** (default: On)
– **"Missed call"** (default: Off)
– **"Alarm"** (default: On) (handset only)
– **"Application alert"** (default: On)

This feature can be set for each unit.

1 **For handset: 【MENU】#278**
For base unit (using a handset): 【MENU】#*278

2 【▲▼】: Select the desired setting and press **【SELECT】**.
- "✓" is displayed next to enabled items.
- To disable an item, select it and press **【SELECT】** again. "✓" disappears.

3 **【SAVE】 → 【OFF】**

Note:
- If the message indicator flashes when the handset is not placed on the base unit, the handset consumes battery power faster than usual.

Slow talk

This feature slows down the speed of the other party's voice, which can make it easier to understand phone conversations, answering system messages, etc. Slow talk is available in the following situations.

– When talking on outside calls (including conferences)
– When playing answering system messages
– When screening calls

Handset / Base unit

– When talking on outside calls or screening calls, press **【SLOW TALK】** on the base unit.
Switches between normal speed and slow speed.

SLOW TALK indicator	Status
Light off	Normal speed
Light on	Slow speed

– When playing answering system messages, press **【SLOW】** on the handset or **【SLOW TALK】** on the base unit more than once.
Switches between normal speed, slow speed, and slower speed.

SLOW TALK indicator	Status
Light off	Normal speed
Light on	Slow speed
Flashing light	Slower speed

Note:

- Slow talk is automatically deactivated when the call ends or when you stop playback.
- This feature is not available for intercom calls or greeting message playback.

Using assistive listening devices

If you use hearing aids that are compatible with a neckloop, you can connect your neckloop to a handset and enjoy hands-free

conversations. When talking on the phone, you can speak using the neckloop's microphone or the handset's microphone depending on the neckloop's features and the handset's settings.

– Hearing aids that are equipped with a telecoil (T-coil)
– Audio neckloops with a 3-pole, 2.5 mm plug
– Audio neckloops with a 3-pole, 3.5 mm plug*1

*1 In this case, a 3-pole 3.5 mm to 3-pole 2.5 mm adaptor is required.

To use with a T-coil-equipped hearing aid

1 Set your hearing aid to the "T" setting.
- Refer to your hearing aid's operating instructions for details.

2 Hold the handset near your hearing aid when talking.

To use a neckloop

When using a neckloop with the handset, you can speak using the neckloop's microphone or using the handset's microphone.

Important:

- You must set the headset type before use (page 33).

1 Connect the neckloop to the headset jack on the side of the handset.

2 Use the handset as normal.
- Refer to your neckloop's operating instructions for details.
- If your neckloop does not have a microphone, speak into the handset's microphone.
- You can use volume booster (page 27), speech booster (page 29), tone control (page 26), and other features even when using a neckloop.

Setting the headset type

Set this setting to match the type of device connected. This feature can be set for each unit.

"Headset" (default): Disables the handset's microphone. The connected headset is used for talking and listening.

"Neckloop with Mic": Disables the handset's microphone. The connected neckloop is used for talking and listening.

"Neckloop w/o Mic": Enables the handset's microphone. The connected neckloop is used for listening only.

1 【**MENU**】#786

2 【▲▼】: Select the desired setting. → 【**SAVE**】 → 【**OFF**】

Link to cell feature

You can connect your base unit and cellular phone using Bluetooth wireless technology, so that you can make or answer cellular calls using your phone system. This allows you to:
– use the unit to talk on cellular calls even if some areas of your home have poor cellular reception, simply by placing your cellular phone in an area with good reception.
– talk on cellular calls even if your cellular phone is in your pocket or bag.
– enjoy cordless cellular calls even if your cellular phone plugged in and charging.

Important:

- Your cellular phone must support the Hands Free Profile (HFP) specification.
- You may pair 2 cellular phones and 1 Bluetooth headset.
- The unit can be used to talk on 2 lines at the same time (for example, 2 cellular lines, or the landline and 1 cellular line).
- Only 2 Bluetooth devices can be used with the unit at the same time (for example, 2 cellular lines, or the Bluetooth headset and 1 cellular line*1).
- Locate your cellular phone near the base unit. If the cellular phone is too close to the base unit during a cellular call, you may hear noise. For best performance, we recommend placing the cellular phone between 0.6 m to 3 m (2 feet to 10 feet) away from the base unit.

*1 You cannot use a Bluetooth headset to talk on a cellular line.

Pairing a cellular phone

Important:

- For more details and the list of compatible cellular phones, please visit our Web site: http://shop.panasonic.com/bluetooth-phone
- Before pairing a Bluetooth enabled cellular phone to the base unit, make sure that no other Bluetooth device such as a Bluetooth headset is connected to your cellular phone.

1 **Base unit:**
Press and hold **[CELL 1]** or **[CELL 2]** for about 5 seconds.
- After the corresponding CELL indicator on the base unit starts flashing, the rest of the procedure must be completed within 5 minutes.

2 **Your cellular phone:**
While the corresponding CELL indicator is flashing, follow the instructions of your cellular phone to enter the pairing mode.
- Depending on your cellular phone, it may ask you to enter the Bluetooth PIN (default: "0000").
- If your cellular phone prompts you to confirm the passkey, tap **[OK]** or otherwise to accept the pairing request.

3 **Base unit:**
Wait until a long beep sounds.
- It may take more than 10 seconds to complete pairing.
- When the corresponding CELL indicator lights up, the cellular phone is connected to the base unit. You are ready to make cellular calls.

Note:

- If the cellular phone has already paired to the base unit, it is overwritten.
- Make sure that your cellular phone is set to connect to this product automatically. Refer to your cellular phone's operating instructions.
- Make sure you cancel your cellular phone's current pairing if you want to pair it to the other line (page 35).
- The default setting for the alert feature is "On", so when you pair your cellular phone to the base unit, this feature may be activated (page 70). (This depends on the version and type of cellular phone you are using.)

Unpairing a cellular phone

You can cancel the pairing of a cellular phone that is stored in the base unit.

1 For CELL 1: **[MENU]** # 6 1 1 1
For CELL 2: **[MENU]** # 6 1 1 2

2 [▲▼]: "Yes" → [SELECT]
- When the cellular phone is unpaired, the CELL indicator is turned off.

3 [OFF]

Link to cell settings

Selecting which unit receives cellular calls

You can select which unit rings and receives calls for a cellular line. When "All" is selected, all handsets and the base unit ring.

1 For CELL 1: [MENU]#6271
For CELL 2: [MENU]#6272

2 [▲▼]: Select the desired handset or "All". → [SAVE] → [OFF]

Note:

- When you select a specific handset to receive calls for a cellular line:
  – other handsets cannot answer the calls.
  – the base unit can answer the calls even though it does not ring. However, you can make the base unit ring by adjusting the base unit ringer volume (page 55).
- When you change to "All" from another setting, the base unit ringer volume also returns to the lowest level even if the ringer volume was changed.
- The units selected with this setting have the alert feature (page 70) applied to them.

Ring as cell mode

Once this feature is turned on, the handset and base unit ring using the same ringer tone as your cellular phone.
The following settings are available:
– "Off": Turn this feature off to use the ringer tones of the handset and base unit. Caller information is announced depending on the Talking Caller ID setting (page 58).
– "On (with Talking CID)" (default): The handset and base unit use your cellular phone's ringer tone. Caller information is announced even if the Talking Caller ID is turned off.
– "On (without Talking CID)": The handset and base unit use your cellular phone's ringer tone. Caller information is not announced even if the Talking Caller ID is turned on.

Important:

- To use this feature, your cellular phone must support Bluetooth in-band ringtone. Refer to your cellular phone's operating instructions.

1 For CELL 1: [MENU]#6141
For CELL 2: [MENU]#6142

2 [▲▼]: Select the desired setting. → [SAVE] → [OFF]

Note:

- The units use the preset ringer tones instead of your cellular phone's ringer tone when a cellular call is being received if:
  – your cellular phone is in silent mode (depending on your cellular phone).
  – the base unit is in use.
  – 2 handsets are sharing a landline call.
- If your cellular phone is in silent mode with "On (with Talking CID)" set, the unit announces caller information even when Talking Caller ID is turned off (page 58).

To use the handset ringer tone instead of your cellular phone's ringer tone

Select "Off" in step 2, "Ring as cell mode", page 36.
To change the handset ringer tone for a cellular line, see page 55.

Auto connection to the Bluetooth devices (cellular phones)

After pairing, your Bluetooth devices are connected to the base unit. If you move the Bluetooth devices out of base unit range, the Bluetooth devices are disconnected from the base unit. This feature allows the base unit to try to reconnect the Bluetooth devices at regular intervals when it returns within base

unit range. You can set the interval. The default setting is "1 min".

Important:

- When 3 Bluetooth devices (2 cellular phones and 1 headset) are paired to the base unit, only 2 Bluetooth devices can be used with the unit at the same time, and the base unit loses its connection from other Bluetooth devices. To automatically resume the connection to Bluetooth devices, leave the auto connection on.
- Some cellular phones lose connection after usage, please check the specifications of your cellular phone for more details.

1 【MENU】#632

2 【▲▼】: Select the desired setting. → 【SAVE】 → 【OFF】

Note:

- Some cellular phones may ask you if you accept the connection requirement from the base unit. In that case, select "Off" in step 2. Check the specifications of your cellular phone.

Connecting/disconnecting the cellular phone manually

If you will not be using the paired cellular phone's link to cell feature temporarily (for example, you do not want the unit to ring when your cellular line receives a call), you can disconnect your cellular phone from the base unit. If you want to use it again, reconnect the cellular phone to the base unit.

Note:

- After you disconnect a paired cellular phone from the base unit manually, it will automatically be connected to the base unit in 30 minutes. If you do not use the link to cell feature anymore, unpair the cellular phone (page 36).
- A disconnected cellular phone is not unpaired from the base unit, so pairing it to the base unit again is unnecessary.

1 **To connect/disconnect:**
For CELL 1: 【MENU】#6251
For CELL 2: 【MENU】#6252
- A long beep sounds.

2 【OFF】

Cellular line only mode (If you do not use the landline)

If you do not use the landline, we recommend setting the unit to the cellular line only mode. The default setting is "Off".

Important:

- If you turn on the "Cell line only mode", disconnect the telephone line cord from the base unit. Otherwise the "Cell line only mode" cannot be activated.

1 【MENU】#157

2 **To turn on:**
【▲▼】: "On" → 【SELECT】 → 【▲▼】: "Yes" → 【SELECT】
To turn off:
【▲▼】: "Off" → 【SELECT】

Note:

- Once you set this mode, you can use the following buttons to make cellular calls:
  – for the handset, press 【TALK】 or 【🔊】 instead of 【CELL】 (page 39).
  – for the base unit, press and hold the desired memory dial key (【M1】 to 【M3】) without pressing 【CELL 1】 or 【CELL 2】 set for the cellular line selection (page 38, 52).
- Once you set this mode, the following features cannot be used:
  – Landline features (page 61)
  – Answering system (page 73)
  Messages cannot be received.
  – Voicemail features (page 80)
- After this mode is turned on or off, the base unit reboots.
  – Bluetooth connections from cellular phones or Bluetooth headset are disconnected. If the auto connection is turned on (page 36), the cellular phones are reconnected.
  – 🚫 will be displayed on the handset momentarily. The handset can be used once 🚫 is displayed.

When you use the landline again

Before connecting the telephone line to the base unit, select **"Off"** in step 2, "Cellular line only mode (If you do not use the landline)", page 37.

Cellular line selection

This feature determines which cellular line is selected to make cellular calls when:

– you press **【CELL】** on the handset.
– you press **【TALK】** or **【🔈】** on the handset while the cellular line only mode is turned on.
– you press and hold the desired memory dial key (**【M1】** to **【M3】**) on the base unit while the cellular line only mode is turned on.

The following settings are available:

– **"Manual"** (handset only: default): You can select the desired cellular line when making a call.
– **"Cellphone 1"**[*1] (base unit default): CELL 1 is selected.
– **"Cellphone 2"**[*1]: CELL 2 is selected.

1 For handset: **【MENU】**#634
For base unit: **【MENU】**#*634

2 **【▲▼】**: Select the desired setting. → **【SAVE】** → **【OFF】**

*1 After the Bluetooth device is paired, the device name is displayed.

Storing your area code (for dialing only a 7-digit phone number to make a local call)

You need to add your area code when making cellular calls to a phone number in your area. Once you store your area code, it is automatically added to the beginning of the 7-digit phone number when making cellular calls.

1 **【MENU】**#633

2 Enter the 3-digit area code.
- To correct a digit, press **【CLEAR】**.

3 **【SAVE】** → **【OFF】**

Changing the Bluetooth PIN (Personal Identification Number)

The PIN is used to pair cellular phones to the base unit. The default PIN is **"0000"**. To prevent unauthorized access to this product, we recommend that you change the PIN, and keep it confidential.

Important:

- Please make note of your new PIN. The unit does not reveal the PIN to you. If you forget your PIN, see page 92.

1 **【MENU】**#619
- If the unit prompts you to enter the old PIN (when the default has been changed), enter the current 4-digit PIN.

2 Enter the new 4-digit PIN. → **【OK】**

3 Enter the new 4-digit PIN again. → **【SAVE】** → **【OFF】**

Making cellular calls

Important:

- The unit can be used to talk on 2 lines at the same time (for example, 2 cellular lines, or the landline and 1 cellular line).
- Only 2 Bluetooth devices can be used with the unit at the same time (for example, 2 cellular lines, or the headset and 1 cellular line*1).
- Before making calls, confirm that the corresponding ✱1/2 on the handset is displayed (page 21).

*1 You cannot use a Bluetooth headset to talk on a cellular line.

1 Lift the handset and then dial the phone number.
- To correct a digit, press **[CLEAR]**.

2 **[CELL]**
- The unit starts dialing immediately in the following situations.
  - Only 1 cellular phone is paired.
  - A specific line is set to make cellular calls (page 38).

  Go to step 4.

3 **[▲▼]**: Select the desired cellular phone. → **[SELECT]**

4 When you finish talking, press **[OFF]** or place the handset on the base unit or charger.

Note:

- While talking, you can switch between the receiver and the speakerphone by pressing **[🔊]**.
- In step 1, you can store the dialed phone number to the phonebook by pressing and holding **[◄]** 📖 for a few seconds.

Adjusting the receiver or speaker volume

Handset

Press **[+]** or **[−]** on the side repeatedly while talking.

- The available settings vary whether volume booster is turned on or off (page 27).
- Pressing the **[BOOST]** key activates the volume booster feature. Use this key with care. To prevent hearing damage, we recommend that you set this product to the lowest volume setting at which you can hear adequately.

Base unit

Press **[+]** or **[−]** repeatedly while talking.

Note for handset and base unit:

- The receiver or speaker volume you set is kept for each line (landline and cellular lines).

Making a cellular call using the redial list

The last 5 phone numbers dialed are stored in the redial list (each 48 digits max.).

1 **[►]** REDIAL

2 **[▲▼]**: Select the desired entry.

3 **[CELL]**
- The unit starts dialing immediately in the following situations.
  - Only 1 cellular phone is paired.
  - A specific line is set to make cellular calls (page 38).

4 **[▲▼]**: Select the desired cellular phone. → **[SELECT]**

Erasing a number in the redial list

■ **When a cellular phone is paired:**

1 **[►]** REDIAL

2 **[▲▼]**: Select the desired entry. → **[MENU]**

3 **[▲▼]**: "Erase" → **[SELECT]**

4 **[▲▼]**: "Yes" → **[SELECT]**

5 **[OFF]**

■ **When a cellular phone is not paired:**

1 **[►]** REDIAL

2 **[▲▼]**: Select the desired entry. → **[ERASE]**

3 **[▲▼]**: "Yes" → **[SELECT]** → **[OFF]**

Making landline calls

1 Lift the handset and then dial the phone number.
   - To correct a digit, press **[CLEAR]**.
2 Press **[TALK]** to make the call.
   - To make the call using the speakerphone, press **[🔊]**.
3 When you finish talking, press **[OFF]** or place the handset on the base unit or charger.

Note:

- While talking, you can switch between the receiver and the speakerphone by pressing **[🔊]**.
- In step 1, you can store the dialed phone number to the phonebook by pressing and holding **[◄]** 📖 for a few seconds.

Making a call using the redial list

The last 5 phone numbers dialed are stored in the redial list (each 48 digits max.).

1 **[►]** REDIAL
2 **[▲▼]**: Select the desired entry.
3 **[TALK]**

Pause (for PBX/long distance service users)

A pause is sometimes required when making calls using a PBX or long distance service. When storing a calling card access number and/or PIN in the phonebook, a pause is also needed (page 51).
Example: If you need to dial the line access number "9" when making outside calls with a PBX:

1 9 → **[▲]** (Pause)
2 Dial the phone number. → **[TALK]**

Note:

- A 3.5 second pause is inserted each time you press **[▲]** (Pause) on the handset.

Answering calls

Using the handset

When a call is being received, the message indicator flashes rapidly if the handset message indicator's "`Incoming call`" setting is enabled (page 31).

1 Lift the handset and then press **[TALK]** or **[🔊]** when the unit rings.
   - To answer a cellular call, you can also press **[CELL]**.
2 When you finish talking, press **[OFF]** or place the handset on the base unit or charger.

Any key answer: You can answer the call by pressing any dial key (1 to 9, ✱, or #).
Auto talk: You can answer calls simply by lifting the handset (page 60).
Temporary handset ringer off: You can turn the ringer off temporarily by pressing **[🔕]** (left soft key).

Using the base unit

When a landline call is being received, the SP-PHONE indicator (🔊) flashes rapidly.
When a cellular call is being received, the CELL indicator and SP-PHONE indicator (🔊) flash rapidly.
Additionally, the message indicator flashes rapidly if the base unit message indicator's "`Incoming call`" setting is enabled (page 31).

1 Press **[🔊]** when the unit rings.
   - You can also answer the cellular call by pressing **[CELL 1]** or **[CELL 2]**.
2 Speak into the microphone.
3 When you finish talking, press **[🔊]**.

Note:

- While on a call, you can switch from the base unit to the handset:
  – Press **[TALK]** on the handset, then press **[🔊]** on the base unit with the call sharing mode on (page 61).
  – If the handset is on the base unit, simply lift it.

Adjusting the ringer volume

Handset

■ **While the handset is ringing for an incoming call:**
Press 【+】 or 【−】 on the side repeatedly to select the desired volume.

■ **While the handset is in standby mode:**
Press 【+】 or 【−】 on the side repeatedly to select the desired volume for landline call.

- To turn the ringer off, press 【−】 repeatedly.

Base unit

■ **While the base unit is ringing for an incoming call:**
Press 【+】 or 【−】 repeatedly to select the desired volume.

■ **While the base unit is in standby mode:**
Press 【+】 or 【−】 repeatedly to select the desired volume for landline call.

- To turn the ringer off, press and hold 【−】 until the base unit beeps.

Note for handset and base unit:

- You can adjust the ringer volume for cellular call and landline call by programming (page 55, 57).
- The ringer volume you set is kept for each line (landline and cellular lines).

One-touch ringer off

Handset

Press and hold 0 until the handset beeps to turn the ringer off. While the ringer is turned off, the handset will not ring for calls.

- You can turn the ringer on again by pressing and holding 0 until the handset beeps.

Base unit

Press 【RINGER OFF】 to turn the ringer off. While the ringer is turned off, the base unit will not ring for calls.

- The RINGER OFF indicator is lit while the ringer is turned off.
- You can turn the ringer on again by pressing 【RINGER OFF】.

Useful features during a call

Hold

1 Press 【MENU】 during an outside call.

2 【▲▼】: "Hold" → 【SELECT】

3 **To release hold on the cellular line:**
Press 【CELL】.*1
- Another handset user can take the call by pressing 【CELL】.*1
  *1 If you press 【CELL】 and the selection list is displayed, select the desired cellular line and press 【SELECT】.
- The base unit user can take the call by pressing 【CELL 1】 or 【CELL 2】.

To release hold on the landline:
Press 【TALK】.
- Another handset user can take the call by pressing 【TALK】.
- The base unit user can take the call by pressing 【🔊】.

Note:

- While a landline call is on hold, the SP-PHONE indicator (🔊) on the base unit flashes.
- After holding for 10 minutes, the call is disconnected.

Mute

Handset

1 Press 【MUTE】 during a call.

2 To return to the call, press 【MUTE】.

Note:

- 【MUTE】 is a soft key visible on the display during a call.

Base unit

1 Press 【ERASE/MUTE】 during a call.
- The SP-PHONE indicator (🔊) flashes.

2 To return to the call, press 【ERASE/MUTE】.

Flash for landline calls

Handset / Base unit

[FLASH] on the handset or **[FLASH/CALL WAIT]** on the base unit allows you to use the special features of your host PBX such as transferring an extension call, or accessing optional telephone services.

Note:

- To change the flash time, see page 60.

For call waiting or Call Waiting Caller ID service users

To use call waiting or Call Waiting Caller ID, you must first subscribe with your phone service provider.
This feature allows you to receive calls while you are already talking on the phone. If you receive a call while on the phone, you will hear a call waiting tone.
If you subscribe to both Caller ID and Call Waiting with Caller ID services, the 2nd caller's information is displayed on the unit that is in use after you hear the call waiting tone.

Handset

1. Press **[FLASH]** to answer the 2nd call.
2. To switch between calls, press **[FLASH]**.

Base unit

1. Press **[FLASH/CALL WAIT]** to answer the 2nd call.
2. To switch between calls, press **[FLASH/CALL WAIT]**.

Note:

- Please contact your phone service provider for details and availability of this service in your area.

Temporary tone dialing for landline calls (for rotary/pulse service users)

Press [*] before entering access numbers which require tone dialing.

Handset sound enhancer

This feature can improve sound clarity when the handset is used in an area where there may be interference. During an outside call, this feature is turned on automatically when necessary.

- When this feature is turned on, [Y] is displayed.

Handset noise reduction

This feature allows you to hear the voice of the person you are talking to more clearly, by reducing the surrounding noise coming from the other party's telephone.

1. Press **[MENU]** while talking.
2. **[▲▼]**: "`Noise reduction on`" or "`Noise reduction off`" → **[SELECT]**

Note:

- The setting you made is kept for each line (landline and cellular lines).
  The default settings are as follows:
  – for landline: "`Noise reduction off`"
  – for cellular lines: "`Noise reduction on`"
- Depending on the environment where this handset is being used, this feature may not be effective.
- This feature is not available while using the speakerphone.

Call share

You can join an existing outside call.

Handset

■ **While another unit is on a cellular call:**

1. To join the conversation, press **[CELL]**.
   - You can join the conversation in the following situations.
     – Only 1 cellular phone is paired.
     – A specific line is set to make cellular calls (page 38).
2. **[▲▼]**: Select the corresponding cellular phone. → **[SELECT]**

■ **While another unit is on a landline call:**
To join the conversation, press **[TALK]**.

Base unit

To join the conversation, select the line that is being used for the call:
– for a cellular line press **[CELL 1]** or **[CELL 2]**.
– for the landline press **[🔊]**.

Note for handset and base unit:
- A maximum of 3 parties (including 1 outside party) can join a conversation using 2 extensions. **(3-way conference)**
- To prevent other users from joining your conversations with outside callers, turn call sharing mode off (page 61).

Transferring calls, conference calls

Outside calls can be transferred or a conference call*1 with an outside party can be made:
– between 2 handsets
– between a handset and the base unit
*1 A conference call can be established using the handset only.

Handset

1 During an outside call, press **[MENU]**.
2 **[▲▼]**: "Intercom" → **[SELECT]**
3 **[▲▼]**: Select the desired unit. → **[SELECT]**
   - If you select "Voice paging", the call will be switched from the ear-receiver mode to the speakerphone mode.
4 Wait for the paged party to answer.
   - If the paged party does not answer, press **[BACK]** to return to the outside call.
5 **To complete the transfer:**
   Press **[OFF]**.
   To establish a conference call:
   [MENU] → **[▲▼]**: "Conference" → **[SELECT]**
   - To leave the conference, press **[OFF]**. The other 2 parties can continue the conversation.
   - To put the outside call on hold: **[MENU]** → **[▲▼]**: "Hold" → **[SELECT]**
     To resume the conference: **[MENU]** → **[▲▼]**: "Conference" → **[SELECT]**
   - To cancel the conference: **[MENU]** → **[▲▼]**: "Stop conference" → **[SELECT]**
     You can continue the conversation with the outside caller.

Base unit

1 During an outside call, press **[LOCATOR/INTERCOM]**.
   - All registered handsets ring.
   - The outside call is put on hold.
2 Wait for the paged party to answer.
   - If the paged party does not answer, press **[LOCATOR/INTERCOM]** to return to the outside call.
3 To complete the transfer, press **[🔊]**.
   - The outside call is being routed to the handset.

Transferring a cellular call between the unit and a cellular phone

■ **From the handset to a cellular phone**
1 Press **[MENU]** during a cellular call.
2 **[▲▼]**: "Transfer to cell" → **[SELECT]**
   - The cellular call is transferred to the cellular phone.

Note:
- Depending on your cellular phone type, you may need to set the cellular phone to be ready to talk before transferring. For example, if your cellular phone has a top cover, open it beforehand.

■ **From a cellular phone to the handset**
During a conversation using a cellular phone, the call cannot be transferred to the handset by the cellular phone. Perform the following with the handset.

1 During a conversation using a cellular phone, press **[CELL]**.
   - The call is transferred to the handset in the following situations.
     – Only 1 cellular phone is paired.
     – A specific line is set to make cellular calls (page 38).

2 **[▲▼]**: Select the corresponding cellular phone. → **[SELECT]**
   - The call is transferred to the handset.

■ **From the base unit to a cellular phone**
During a cellular call, press and hold **[CELL 1]** or **[CELL 2]** until the SP-PHONE indicator goes out.
- The cellular call is transferred to the cellular phone.

■ **From a cellular phone to the base unit**
During a conversation using a cellular phone, press **[CELL 1]** or **[CELL 2]**.
- The cellular call is transferred to the base unit.

Answering a 2nd call

If you receive a call while talking on the phone, the interrupt tone sounds (page 58) and the 2nd caller's information is displayed on the handset if you subscribe to Caller ID service (page 65).

Answering a 2nd call during a landline call

Handset

1 Press **[MENU]** during a landline call.

2 **[▲▼]**: "`Hold`" → **[SELECT]**

3 **To answer the 2nd call:**
Press **[CELL]** while the 2nd call is being received.

4 To hang up the 2nd call and return to the 1st call (landline call), press **[OFF]**, then press **[TALK]**.

Base unit

Press **[🔊]**, then press **[🔊]** while the 2nd call is being received.
- Note that the current call is disconnected.

Answering a 2nd call during a cellular call

Handset

1 Press **[MENU]** during a cellular call.

2 **[▲▼]**: "`Hold`" → **[SELECT]**

3 **To answer the 2nd call:**
Press **[TALK]** or **[CELL]** while the 2nd call is being received.

4 To hang up the 2nd call and return to the 1st call (cellular call), press **[OFF]**, then press **[CELL]**.*1

*1 If you press **[CELL]** and the selection list is displayed, select the desired cellular line and press **[SELECT]**.

Base unit

Press **[🔊]**, then press **[🔊]** while the 2nd call is being received.
- Note that the current call is disconnected.

Intercom

Intercom calls can be made:
– between handsets
– between a handset and the base unit

Note:
- When paging unit(s), the paged unit(s) rings for 1 minute.
- If you receive an outside call while talking on the intercom, the interrupt tone sounds (page 58).
  – **Handset:** To finish intercom, press **[OFF]**. To answer the call, press **[TALK]** or **[CELL]**.
  – **Base unit:** To finish intercom, press **[🔊]**. To answer the call, press **[🔊]** again or the corresponding cellular line key (**[CELL 1]** or **[CELL 2]**).
- To change the ringer volume and ringer tone for intercom calls, see page 57.

Making an intercom call

Handset

1 [MENU] → [▲▼]: "Intercom" → [SELECT]

2 [▲▼]: Select the desired unit or "Voice paging". → [SELECT]
   - If you select "Voice paging", speak into the microphone after the beep. Your voice will be heard from the speakers of the base unit and all handsets. Voice paging ends when you press [OFF] or when a handset user or base unit user answers your voice page.

3 When you finish talking, press [OFF].

Note:

- You can also use the [INTERCOM] soft key, if displayed, to make intercom calls.
- You cannot use voice paging if other units are in use.
- Voice paging is not available when a range extender (KX-TGA407) is registered to the base unit.

Base unit

1 Press [LOCATOR/INTERCOM].
   - All registered handsets ring.

2 When you finish talking, press [🔊].

Answering an intercom call

Handset

1 Press [TALK] to answer the page.

2 When you finish talking, press [OFF].

Base unit

1 Press [🔊] to answer the page.

2 When you finish talking, press [🔊].

Call block

In the following situations, you can disconnect the current call and add the caller's phone number to the call block list.
– When an outside call is being received
– When an outside caller's message is being recorded
– When you are talking on an outside call

1 **When an outside call is being received or**
When an outside caller's message is being recorded
Press **[BLOCK]** on the handset.
When you are talking on an outside call
[MENU] → **[▲▼]**: **"Blocked call"** → **[SELECT]**

2 Confirm the call block number and press **[YES]**.
- The phone number is stored in the call block list, **"Caller blocked"** is displayed, and the call is disconnected.

Note:
- While on the charger, the **[BLOCK]** key is not available. Lift the handset from the charger to use this feature.
- If the call has no phone number, the call is blocked but it is not stored in the call block list.
- The call block feature is not available:
  – for intercom calls or calls received by call waiting.
  – when a landline call (or cellular call) is being received during a cellular call (or landline call).
- Blocked calls are logged in the caller list.

Storing unwanted callers

The unit can block calls by storing the desired items in the call block list beforehand (Caller ID subscribers only).
– **"Block a single number"**: The unit blocks calls from specific phone numbers stored in the call block list.
– **"Block range of numbers"**: The unit blocks calls that begin with a number stored in the call block list, such as a toll-free phone number prefix or certain area codes.
– **"Block unknown CID"**: The unit blocks calls that have no phone number.

Single phone numbers and ranges of numbers can be stored in the call block list up to 250 items in total.

Blocking unwanted callers:
When a call is received, the unit rings once*1 while caller information is being received.
If the caller's phone number matches an entry in the call block list, the unit emits no sound to the caller, and disconnects the call.

*1 If you do not want this one ring to sound, select **"No"** in "Turning the first ring on and off" (page 47).

Storing a single phone number

Important:
- We recommend storing 10 digits (including the area code). If only 7 digits are stored, all numbers that have the same last 7 digits will be blocked.

Adding call blocked numbers from the caller list

■ **When a cellular phone is paired:**

1 **[▼]** CID

2 **[▲▼]**: Select the desired entry to be blocked. → **[SELECT]**
- To edit the number:
  Press ⊠ (Edit) repeatedly until the phone number is shown in the 10-digit format. → **[SAVE]** → **[▲▼]**: **"Call block"** → **[SELECT]** → Go to step 4.

3 **[SAVE]** → **[▲▼]**: **"Call block"** → **[SELECT]**

4 **[▲▼]**: **"Yes"** → **[SELECT]**

5 Edit the phone number if necessary (24 digits max.). → **[SAVE]** → **[OFF]**

■ **When a cellular phone is not paired:**

1 **[▼]** CID

2 [▲▼]: Select the desired entry to be blocked. → [MENU]
   - To edit the number: [▲▼]: "Edit" → [SELECT]
     Press [EDIT] repeatedly until the phone number is shown in the 10-digit format. → [SAVE] → [▲▼]: "Call block" → [SELECT] → Go to step 4.

3 [▲▼]: "Save call block" → [SELECT]

4 [▲▼]: "Yes" → [SELECT]

5 Edit the phone number if necessary (24 digits max.). → [SAVE] → [OFF]

Adding call blocked numbers manually

1 [MENU]#217

2 [▲▼]: "Block a single number" → [SELECT]

3 [MENU] → [▲▼]: "Add" → [SELECT]

4 Enter the phone number (24 digits max.). → [SAVE] → [OFF]

Storing a range of number

1 [MENU]#217

2 [▲▼]: "Block range of numbers" → [SELECT]

3 [MENU] → [▲▼]: "Add" → [SELECT]

4 Enter the desired number (2-8 digits). → [SAVE] → [OFF]

Blocking incoming calls that have no phone number

You can block calls when no phone number is provided, such as private callers or out of area calls.

1 [MENU]#217

2 [▲▼]: "Block unknown CID" → [SELECT]

3 [▲▼]: Select the desired setting. → [SAVE] → [OFF]

Turning the first ring on and off

You can choose whether the first ring sounds when a call is received.
"Yes" (default): The first ring for all calls will be heard, including calls from blocked phone numbers.
"No": The first ring is muted for all calls. If this setting is selected, the unit will never ring for calls from blocked phone numbers.

1 [MENU]#217

2 [▲▼]: "One ring for blocked call" → [SELECT]

3 [▲▼]: Select the desired setting. → [SAVE] → [OFF]

Viewing/editing/erasing call block numbers

1 [MENU]#217

2 [▲▼]: "Block a single number" or "Block range of numbers" → [SELECT]

3 [▲▼]: Select the desired entry.
   - After viewing, press [OFF] to exit.

4 **To edit a number:**
   [EDIT] → Edit the number. → [SAVE] → [OFF]
   To erase a number:
   [ERASE] → [▲▼]: "Yes" → [SELECT] → [OFF]

Note:

- When editing, press the desired dial key to add digits and press [CLEAR] to erase digits.

Erasing all call block numbers

1 [MENU]#217

2 [▲▼]: "Block a single number" or "Block range of numbers" → [SELECT]

3 [MENU] → [▲▼]: "Erase all" → [SELECT]

4 [▲▼]: "Yes" → [SELECT]

5 [▲▼]: "Yes" → [SELECT] → [OFF]

Phonebook

You can add 3,000 names (16 characters max.) and phone numbers (24 digits max.) to the phonebook, and assign each phonebook entry to the desired group (page 50). The following groups are available:
– Group 1: "Home"*1 (default)
– Group 2: "Cell 1"*1
– Group 3: "Cell 2"*1
– Group 4-9: You can change the group name for each group.
*1 For groups 1-3, the group names cannot be changed.

Important:
- All entries can be shared by any registered handset.
- You can copy phonebook entries from a Bluetooth cellular phone to the unit's phonebook (page 68).

Adding phonebook entries

1 [◄] 📖 → [MENU]
2 [▲▼]: "Add new entry" → [SELECT]
3 Enter the party's name. → [OK]
4 Enter the party's phone number. → [OK]
5 [▲▼]: Select the desired group. → [SELECT] 2 times → [OFF]

Note:
- In step 3, you can switch the language for entering characters.
  [#] → [▲▼]: Select the desired language. → [OK]

Entering characters

Press the dial key that corresponds to the desired character. Press repeatedly to scroll through the available characters.
The following operations are also available.

Key	Operation
[*]	Switch between the uppercase and lowercase (A ↔ a)
[◄] [►]	Move the cursor
[CLEAR]	Erase the character or number ● To erase all, press and hold it.

- To enter another character that is located on the same dial key, first press [►] to move the cursor to the next space.
- If you do not press any dial key within 2 seconds after entering a character, the character is fixed and the cursor moves to the next space.

Storing a redial list number to the phonebook

Phone numbers of up to 24 digits can be stored in the phonebook.

■ **When a cellular phone is paired:**
1 [►] REDIAL
2 [▲▼]: Select the desired entry. → [MENU]
3 [▲▼]: "Save" → [SELECT]
4 To store the name, continue from step 3, "Editing entries", page 51.

■ **When a cellular phone is not paired:**
1 [►] REDIAL
2 [▲▼]: Select the desired entry. → [SAVE]
3 To store the name, continue from step 3, "Editing entries", page 51.

Note:
- The name stored in the phonebook will be reflected in the redial list after you make a call using that phonebook entry.

Storing caller information to the phonebook

■ **When a cellular phone is paired:**
1 [▼] CID

2 【▲▼】: Select the desired entry. → 【SELECT】
- To edit the number, press ⊠ (Edit) repeatedly until the phone number is shown in the desired format.

3 【SAVE】

4 【▲▼】: "Phonebook" → 【SELECT】

5 Continue from step 3, "Editing entries", page 51.

■ **When a cellular phone is not paired:**

1 【▼】 CID

2 【▲▼】: Select the desired entry. → 【MENU】
- To edit the number: 【▲▼】: "Edit" → 【SELECT】
  Press 【EDIT】 repeatedly until the phone number is shown in the desired format. → 【SAVE】 → 【▲▼】: "Phonebook" → 【SELECT】 → Go to step 4.

3 【▲▼】: "Save phonebook" → 【SELECT】

4 Continue from step 3, "Editing entries", page 51.

Groups

Groups can help you find entries in the phonebook quickly and easily. You can change the group names for groups 4-9 ("Friends", "Family", etc.). By assigning different ringer tones for different groups of callers, you can identify who is calling (ringer ID), if you have subscribed to Caller ID service.

Changing group names/setting ringer ID

1 【◄】 📖 → 【MENU】

2 【▲▼】: "Group" → 【SELECT】

3 【▲▼】: Select the desired group. → 【SELECT】

4 **To change group names**
【▲▼】: "Group name" → 【SELECT】 → Edit the name (10 characters max.).
- You cannot change group names if you selected "Home", "Cell 1", or "Cell 2" in step 3.

To set group ringer tone
【▲▼】: Select the current setting of the group ringer tone. → 【SELECT】 → 【▲▼】: Select the desired ringer tone.
- If you select one of the ringers ("Ringer 1" to "Ringer 5"), select the desired frequency ("Frequency 1" to "Frequency 6").

5 【SAVE】 → 【OFF】

Finding and calling from a phonebook entry

1 【◄】 📖

2 **To scroll through all entries**
【▲▼】: Select the desired entry.
To search by first character
① Press the dial key (0 to 9, or #) which contains the character you are searching for.
② 【▲▼】: Scroll through the phonebook if necessary.
To search by group
① 【GROUP】
② 【▲▼】: Select the desired group. → 【SELECT】
③ 【▲▼】: Scroll through the phonebook if necessary.
To search by query
You can narrow down the search to enter the first characters of a name.
① ⊠
② To search for the name, enter the first characters (up to 4) in uppercase (page 49). → 【OK】
③ 【▲▼】: Scroll through the phonebook if necessary.

3 ■ **Using a cellular line:**
① 【CELL】
- The unit starts dialing immediately in the following situations.
  – Only 1 cellular phone is paired.
  – A specific line is set to make cellular calls (page 38).

② 【▲▼】: Select the desired cellular phone. → 【SELECT】

■ **Using a landline:**
【TALK】

Editing entries

1 Find the desired entry (page 50).
2 【MENU】 → 【▲▼】: "Edit" → 【SELECT】
3 Edit the name if necessary. → 【OK】
4 Edit the phone number if necessary. → 【OK】
5 【▲▼】: Select the desired group (page 50). → 【SELECT】 2 times → 【OFF】

Erasing entries

Erasing an entry

1 Find the desired entry (page 50).
2 【MENU】 → 【▲▼】: "Erase" → 【SELECT】
3 【▲▼】: "Yes" → 【SELECT】 → 【OFF】

Erasing all entries

1 【◄】 📖 → 【MENU】
2 【▲▼】: "Erase all" → 【SELECT】
3 【▲▼】: Select the desired group. → 【SELECT】
4 【▲▼】: "Yes" → 【SELECT】
5 【▲▼】: "Yes" → 【SELECT】 → 【OFF】

Chain dial

This feature allows you to dial phone numbers in the phonebook while you are on a call. This feature can be used, for example, to dial a calling card access number or bank account PIN that you have stored in the phonebook, without having to dial manually.

1 During an outside call, press 【◄】 📖.
2 【▲▼】: Select the desired entry.
3 Press 【CALL】 to dial the number.

Note:

- When storing a calling card access number and your PIN in the phonebook as one phonebook entry, press 【▲】 (Pause) to add pauses after the number and PIN as necessary (page 40).
- If you have rotary/pulse service, you need to press ✱ before pressing 【◄】 📖 in step 1 to change the dialing mode temporarily to tone. When adding entries to the phonebook, we recommend adding ✱ to the beginning of phone numbers you wish to chain dial (page 49).

Memory dial

For easy dialing, you can assign a phone number to each dial key (1 to 9) on the handset. All memory dial entries can be used by any handset.
Phone numbers assigned to dial keys 1 to 3 on the handset are also assigned to the base unit's memory dial keys (【M1】, 【M2】, and 【M3】).

Adding phone numbers to memory dial keys

■ **By entering phone numbers:**

1 Press and hold the desired memory dial key (1 to 9). → 【ADD】
2 【▲▼】: "Manual" → 【SELECT】
3 Enter the party's name (16 characters max.). → 【OK】
4 Enter the party's phone number (24 digits max.). → 【OK】 → 【SELECT】 → 【OFF】

■ **From the phonebook:**

1 Press and hold the desired memory dial key (1 to 9). → 【ADD】
2 【▲▼】: "Phonebook" → 【SELECT】
3 【▲▼】: Select the desired entry. → 【SAVE】 → 【OFF】

Note:

- If you edit a phonebook entry which is assigned to a memory dial key, the edited entry does not transfer to the memory dial key.

Editing an entry

1 Press and hold the desired memory dial key (1 to 9). → **【MENU】**
2 **【▲▼】**: **"Edit"** → **【SELECT】**
3 Edit the name if necessary. → **【OK】**
4 Edit the phone number if necessary. → **【OK】** → **【SELECT】** → **【OFF】**

Erasing an entry

1 Press and hold the desired memory dial key (1 to 9). → **【MENU】**
2 **【▲▼】**: **"Erase"** → **【SELECT】**
3 **【▲▼】**: **"Yes"** → **【SELECT】** → **【OFF】**

Viewing an entry/Making a call using the handset

■ **Using a cellular line:**

1 Press and hold the desired memory dial key (1 to 9).
2 **【CELL】**
- The unit starts dialing immediately in the following situations.
  - Only 1 cellular phone is paired.
  - A specific line is set to make cellular calls (page 38).

3 **【▲▼】**: Select the desired cellular phone. → **【SELECT】**

■ **Using a landline:**

1 Press and hold the desired memory dial key (1 to 9).
2 To make a call, press **【TALK】**.

Confirming an entry/ Making a call using the base unit

If the talking keypad and phonebook feature is set to **"High"** or **"Low"**, you can confirm the entry that is assigned to a memory dial key before calling that entry (page 30). Set the talking keypad and phonebook to **"High"** or **"Low"** first (page 30).

To confirm an entry

Press the desired memory dial key (**【M1】** to **【M3】**).
- The unit announces the name or phone number of the entry.

To make a call

■ **Using a cellular line:**

1 Press **【CELL 1】** or **【CELL 2】**.
- The speakerphone turns on.

2 Press the desired memory dial key (**【M1】** to **【M3】**).

■ **Using a landline:**
Press and hold the desired memory dial key (**【M1】** to **【M3】**).
- The speakerphone turns on.

Menu list

To access the features, there are 2 methods.

■ **Scrolling through the display menus**

1 【MENU】
2 Press 【▼】 or 【▲】 to select the desired main menu. → 【SELECT】
3 Press 【▼】 or 【▲】 to select the desired item from the next sub-menus. → 【SELECT】
4 Press 【▼】 or 【▲】 to select the desired setting. → 【SAVE】

■ **Using the direct command code**

1 【MENU】 → Enter the desired code.
Example: Press 【MENU】#10 1.
2 Select the desired setting. → 【SAVE】

Note:

- To exit the operation, press 【OFF】.
- In the following table, < > indicates the default settings.
- In the following table, ☞ indicates the reference page number.
- Display menu order and sub-menu may vary depending on your model.

Display menu tree and direct command code table

Main menu: 📖 "Phonebook"

Operation	Code	☞
Viewing the phonebook entry.	**#280**	50

Main menu: "Caller list"

Operation	Code	☞
Viewing the caller list.	**#213**	65

Main menu: "Answering device"

Sub-menu 1	Sub-menu 2	Settings	Code	☞
Play new message	–	–	**#323**	74
Play all message	–	–	**#324**	74
Erase all message*1	–	–	**#325**	75
Greeting	Record greeting*1	–	**#302**	73
	Check greeting	–	**#303**	74
	Pre-recorded*1 (Reset to pre-recorded greeting)	–	**#304**	74

Sub-menu 1	Sub-menu 2	Settings	Code	☞
New message alert*1	Outgoing call – On/Off	On <Off>	#338	76
	Outgoing call – Notification to	–		
	Outgoing call – Remote code	Activate <Inactivate>		
	Base unit beep	On <Off>	#339	76
Settings	Ring count*1	Toll saver 2-7 rings <4 rings>	#211	78
	Recording time*1	<3 min> 1 min Greeting only*2	#305	79
	Remote code*1	<111>	#306	77
	Screen call – Handset	<On> Off	#310	78
	Screen call – Base unit*1	<On> Off	#✱310	
Answer on*1	–	–	#327	73
Answer off*1	–	–	#328	73

Main menu: ✉ "Voicemail access"*3

Operation	Code	☞
Listening to voicemail messages.	#330	81

Main menu: 📞 "Intercom"

Operation	Code	☞
Paging the desired unit.	#274	45

Main menu: ✱ "Bluetooth"

Sub-menu 1	Sub-menu 2	Settings	Code	☞
Link to cell – 1:Add new device*4 (for CELL 1) – 2:Add new device*4 (for CELL 2)	Connect*1/ Disconnect*1	–	#6251*5	37
			#6252*6	
	Ringer volume – Handset	Off–6 <6>	#6281*5	41
			#6282*6	
	Ringer volume – Base unit*1	Off–10 <1>	#✱6281*5	41
			#✱6282*6	
	Ringer tone – Handset*7, *8, *9	<Ringer 2>*5 <Ringer 4>*6	#6291*5	–
			#6292*6	
	Ringer tone – Base unit*1, *8, *9	<Ringer 2>*5 <Ringer 4>*6	#✱6291*5	–
			#✱6292*6	
	Select unit to ring*1	<All> Handset 1-6	#6271*5	36
			#6272*6	
	Ring as cell (limited)*1	<On (with Talking CID)> On (without Talking CID) Off	#6141*5	36
			#6142*6	
	Alert settings – Alert On/Off*1	<On> Off	#6101*5	70
			#6102*6	
	Alert settings – Voice alert*1	<On> Off	#6031*5	70
			#6032*6	
	Alert settings – Alert tone	<Tone 1>*5 <Tone 2>*6	#6041*5	70
			#6042*6	
	Pair	–	#6241*5	35
			#6242*6	
	Unpair	–	#6111*5	35
			#6112*6	
Phonebook transfer	–	–	#618	68
Headset	Add new device*4	–	#621	71
	Connect*1/ Disconnect*1	–	#622	71
	Pair	–	#621	71
	Unpair	–	#612	71

Sub-menu 1	Sub-menu 2	Settings	Code	☞
Settings	Auto connect*1	Off <1 min> 3 min 5 min 10 min	#632	36
	Cell area code*1	–	#633	38
	Cell line only mode*1	On <Off>	#157	37
	Cell line select – Handset	<Manual> Cellphone 1*4 Cellphone 2*4	#634	38
	Cell line select – Base unit*1	<Cellphone 1>*4 Cellphone 2*4	#✱634	
	Set PIN*1	<0000>	#619	38
	International code*1	–	#117	68
	Country code*1	–	#118	
	Trunk prefix*1	–	#119	

Main menu: ◷ "Set date & time"

Sub-menu 1	Sub-menu 2	Settings	Code	☞
Date and time*1	–	–	#101	24
Memo alarm	Alarm1-3	<Off> Once Daily Weekly	#720	62
Time adjustment*1, *10	–	<Caller ID auto> Manual	#226	–

Main menu: ▪▪▪ "Memory dial"

Operation	Code	☞
Viewing the memory dial entry.	#261	51

Main menu: “Settings”

Sub-menu 1	Sub-menu 2	Settings	Code	☞
Ring adjustments	Ringer volume (Incoming) – Handset*3	Off–6 <6>	**#160**	–
	Ringer volume (Incoming) – Base unit*1, *3	Off–10 <1>	**#✱160**	–
	Intercom ringer volume – Handset	1–6 <6>	**#175**	–
	Intercom ringer volume – Base unit*1	1–10 <1>	**#✱175**	–
	Ringer tone (Incoming) – Handset*3, *7, *8, *9	<Ringer 1>	**#161**	–
	Ringer tone (Incoming) – Base unit*1, *3, *8, *9	<Ringer 1>	**#✱161**	–
	Intercom ringer tone – Handset*7, *8, *9	<Ringer 3>	**#163**	–
	Intercom ringer tone – Base unit*1, *8, *9	<Ringer 3>	**#✱163**	–
	Silent mode – Handset	On/Off – On – <Off>	**#238**	63
		Start/End – <11:00 PM/ 06:00 AM>	**#237**	63
		Select group Home Cell 1 Cell 2 Group 4-9	**#241**	63
	Silent mode – Base unit*1	On/Off – On – <Off>	**#✱238**	63
		Start/End – <11:00 PM/ 06:00 AM>	**#✱237**	63
		Select group Home Cell 1 Cell 2 Group 4-9	**#✱241**	63

Sub-menu 1	Sub-menu 2	Settings	Code	☞
Audio settings	Talking dial – Handset	<Off> Low High	#750	29
	Talking dial – Base unit*1	<Off> Low High	#✱750	
	Talking caller ID – Handset	<On> Off	#162	65
	Talking caller ID – Base unit*1	On <Off>	#✱162	
	Auto boost	On <Off>	#782	28
	Boost speech	On <Off>	#783	29
	Key tone – Handset	Off <Low> High	#165	30
	Key tone – Base unit*1	Off <Low> High	#✱165	
	Interrupt tone – Handset*11	<On> Off	#201	44
	Interrupt tone – Base unit*1, *11	<On> Off	#✱201	
Set date & time	Date and time*1	–	#101	24
	Memo alarm – Alarm1-3	<Off> Once Daily Weekly	#720	62
	Time adjustment*1, *10	<Caller ID auto> Manual	#226	–

Sub-menu 1	Sub-menu 2	Settings	Code	☞
Key detector setting*12 – 1: Add new device (for Detector1)*13 – 2: Add new device (for Detector2) – 3: Add new device (for Detector3) – 4: Add new device (for Detector4)	Change name*1	Detector1	#6561	–
		Detector2*14	#6562*14	
		Detector3*14	#6563*14	
		Detector4*14	#6564*14	
	Registration	–	#6571	–
			#6572*14	
			#6573*14	
			#6574*14	
	Deregistration	–	#6581	–
			#6582*14	
			#6583*14	
			#6584*14	
Call block*1	Block a single number	–	#217	46
	Block range of numbers	–		47
	Block unknown CID (CID: Caller ID)	Block <Unblock>	#240	47
	One ring for blocked call	<Yes> No	#173	47
Memory dial	–	–	#261	51
Record greeting*1	–	–	#302	73
Voicemail*3	Save VM access#*1 (VM: Voicemail)	–	#331	80
	VM tone detect*1	<On> Off	#332	80
LCD contrast (Display contrast)	–	Level 1–4 <2>	#145	–
Handset name	–	–	#104	63
Display name	–	On <Off>	#105	63

Sub-menu 1	Sub-menu 2	Settings	Code	☞
Message indicator	Handset – Incoming call	<On> Off	#278	31
	Handset – New message	<On> Off		
	Handset – New VM	<On> Off		
	Handset – Missed call	On <Off>		
	Handset – Alarm	<On> Off		
	Handset – Application alert	<On> Off		
	Base unit*1 – Incoming call	<On> Off	#✱278	
	Base unit*1 – New message	<On> Off		
	Base unit*1 – New VM	<On> Off		
	Base unit*1 – Missed call	On <Off>		
	Base unit*1 – Application alert	<On> Off		
Caller ID edit (Caller ID number auto edit)	–	<On> Off	#214	66
Auto talk*15	–	On <Off>	#200	40
Set tel line	Set dial mode*1	<Tone> Pulse	#120	25
	Set flash time*1, *16	80 ms 90 ms 100 ms 110 ms 160 ms 200 ms 250 ms 300 ms 400 ms 600 ms <700 ms> 900 ms	#121	42
	Set line mode*1, *17	A <B>	#122	–

Sub-menu 1	Sub-menu 2	Settings	Code	☞
Call sharing*1	–	<On> Off	#194	42
Registration	Register handset	–	#130	64
	Deregistration*2	–	#131	64
Headset type	–	<Headset> Neckloop with Mic Neckloop w/ o Mic	#786	33
Change language	Display	<English> Español	#110	23
	Announcement*1	<English> Español	#112	23

Main menu: "Customer support"

Operation	Code	☞
Displaying customer support Web address.	#680	–

Main menu: "Key detector"*12

Sub-menu 1	Sub-menu 2	Settings	Code	☞
Search	–	–	#655	–
Battery check	–	–		

*1 If you program these settings using one of the units, you do not need to program the same item using another unit.
*2 This menu is not displayed when scrolling through the display menus. It is only available in direct command code.
*3 When the cellular line only mode is turned on, these menus are not displayed (page 37).
*4 After the Bluetooth device is paired, the device name is displayed.
*5 For CELL 1
*6 For CELL 2
*7 The preset ringers in this product ("Ringer 6" - "Ringer 15") are used with permission of © 2004 - 2013 Copyrights Vision Inc.
*8 If you subscribe to a distinctive ring service (such as IDENTA-RING), select one of the ringers ("Ringer 1" to "Ringer 5").
*9 If you select one of the ringers ("Ringer 1" to "Ringer 5"), select the desired frequency ("Frequency 1" to "Frequency 6").
*10 This feature allows the unit to automatically adjust the date and time each time caller information including date and time is received.
To turn this feature on, select "Caller ID auto". To turn this feature off, select "Manual". (Caller ID subscribers only)
To use this feature, set the date and time first (page 24).
*11 This tone lets you know when you receive an outside call while you are on another line or an intercom call. If you select "On", the tone sounds 2 times.

*12 This setting is available when you have the key detector (KX-TGA20). Read the installation manual for more information on the key detector.
*13 For models with supplied key detectors, the display shows "**1: Detector1**".
*14 If you register 2 or more key detectors.
*15 If you subscribe to a Caller ID service and want to view the caller's information after lifting up the handset to answer a call, turn off this feature.
*16 The flash time depends on your telephone exchange or host PBX. Contact your PBX supplier if necessary. The setting should stay at **"700 ms"** unless pressing **[FLASH]** fails to pick up the waiting call.
*17 Generally, the line mode setting should not be changed. This setting automatically maintains receiver volume at the proper level depending on the current telephone line condition. Set the line mode to **"A"** if telephone line condition is not good.

Alarm

An alarm sounds at the set time for 1 minute and repeats 5 times at 5 minute intervals (snooze function). You can also configure the alarm to display a text memo. You can set 3 separate alarms for each handset. Each alarm can be set to sound once, daily, or weekly. When an alarm sounds, the message indicator flashes rapidly if the handset message indicator's **"Alarm"** setting is enabled (page 31).

Important:

- Make sure the unit's date and time setting is correct (page 24).

1 **[MENU]**#720

2 **[▲▼]**: Select the desired alarm. → **[SELECT]**

3 **[▲▼]**: Select the desired alarm option. → **[SELECT]**

"Off" Turns alarm off. Go to step 10.
"Once" An alarm sounds once at the set time.
"Daily" An alarm sounds daily at the set time. Go to step 5.
"Weekly" Alarm sounds weekly at the set time(s).

4 Proceed with the operation according to your selection in step 3.

- **Once:**
  Enter the desired month and date. → **[OK]**
- **Weekly:**
  [▲▼]: Select the desired day of the week and press **[SELECT]**. → **[OK]**

5 Set the desired time.

6 ✱: Select **"AM"** or **"PM"**. → **[OK]**

7 Enter a text memo (10 characters max.). → **[OK]**

8 **[▲▼]**: Select the desired alarm tone. → **[SELECT]**
- If you select one of the ringers (**"Ringer 1"** to **"Ringer 5"**), select the desired frequency (**"Frequency 1"** to **"Frequency 6"**).
- We recommend selecting a different ringer tone from the one used for outside calls and intercom calls.

9 **[▲▼]**: Select the desired snooze setting. → **[SAVE]**

10 **[SELECT]** → **[OFF]**

Note:

- Press **[STOP]** to stop the alarm completely.
- When the handset is in use, the alarm will not sound until the handset is in standby mode.
- Press any dial key or **[SNOOZE]** to stop the sound but keep the snooze function activated.
- If you want to make an outside call when the snooze function is activated, please

stop the snooze function before making the call.

Silent mode

Silent mode allows you to select a period of time during which the handset and/or base unit will not ring for outside calls. This feature is useful for time periods when you do not want to be disturbed, for example, while sleeping. Silent mode can be set for each unit. Using the phonebook's group feature (page 50), you can also select groups of callers whose calls override silent mode and ring the unit (Caller ID subscribers only).

Important:

- Make sure the unit's date and time setting is correct (page 24).
- If you have set the alarm, the alarm sounds even if the silent mode is turned on.

Turning silent mode on/off

1 **For handset: [MENU]#238**
For base unit (using a handset): [MENU]#*238

2 [▲▼]: Select the desired setting. → **[SAVE]**
- If you select "**Off**", press **[OFF]** to exit.

3 Enter the desired hour and minute you wish to start this feature.

4 *: Select "**AM**" or "**PM**". → **[OK]**

5 Enter the desired hour and minute you wish to end this feature.

6 *: Select "**AM**" or "**PM**".

7 **[SAVE]** → **[OFF]**

Changing the start and end time

1 **For handset: [MENU]#237**
For base unit (using a handset): [MENU]#*237

2 Continue from step 3, "Turning silent mode on/off", page 63.

Selecting groups to bypass silent mode

1 **For handset: [MENU]#241**
For base unit (using a handset): [MENU]#*241

2 [▲▼]: Select the desired groups. → **[SELECT]**
- "✓" is displayed next to the selected group numbers.
- To cancel the selected group: [▲▼]: Select the group. → Press **[SELECT]** again. "✓" disappears.

3 **[SAVE]** → **[OFF]**

Other programming

Changing the handset name

The default handset name is "**Handset 1**" to "**Handset 6**". You can customize the name of each handset ("Bob", "Kitchen", etc.). This is useful when you make intercom calls between handsets. To display the handset name in standby mode, turn on the handset name display feature (page 63).

1 **[MENU]#104**

2 Enter the desired name (10 characters max.). → **[SAVE]** → **[OFF]**

Displaying the handset name

You can select whether or not the handset name is displayed in standby mode. The default setting is "**Off**".

1 **[MENU]#105**

2 [▲▼]: Select the desired setting. → **[SAVE]** → **[OFF]**

Registering a unit

Operating additional units

Additional handsets

Up to 6 handsets can be registered to the base unit.

Important:

- See page 5 for information on the available model.

Registering a handset to the base unit

The supplied handset and base unit are pre-registered. If for some reason the handset is not registered to the base unit, re-register the handset.

1 **Handset:**
[MENU][#][1][3][0]

2 **Base unit:**
Press and hold **[LOCATOR/INTERCOM]** for about 5 seconds.
- If all registered handsets start ringing, press **[LOCATOR/INTERCOM]** again to stop, then repeat this step.

3 **Handset:**
Press **[OK]**, then wait until a long beep sounds.

Deregistering a handset

A handset can cancel its own registration to the base unit, or other handsets registered to the same base unit. This allows the handset to end its wireless connection with the system.

1 **[MENU]**[#][1][3][1]
- All handsets registered to the base unit are displayed.

2 **[▲▼]**: Select the handset you want to cancel. → **[SELECT]**

3 **[▲▼]**: **"Yes"** → **[SELECT]** → **[OFF]**

Using Caller ID service

Important:

- This unit is Caller ID compatible. To use Caller ID features, you must subscribe to a Caller ID service. Contact your phone service provider for details.

Caller ID features

When an outside call is being received, the caller information is displayed.
Caller information for the last 50 callers is logged in the caller list from the most recent call to the oldest.

- If the unit cannot receive caller information, the following is displayed:
  - **"Out of area"**: The caller dials from an area which does not provide a Caller ID service.
  - **"Private caller"**: The caller requests not to send caller information.
  - **"Long distance"**: The caller makes a long distance call.
- If the unit is connected to a PBX system, caller information may not be properly received. Contact your PBX supplier.

Missed calls

If a call is not answered, the unit treats it as a missed call. The display shows **"Missed call"**.
When there is a missed call, the message indicator flashes slowly if the handset or base unit message indicator's **"Missed call"** setting is enabled (page 31).

Note:

- Even when there are unviewed missed calls, **"Missed call"** disappears from the standby display if the following operation is performed by one of the units:
  - A handset is replaced on the base unit or charger.
  - Pressing **[OFF]** on a handset.

Phonebook name display

When caller information is received and it matches a phone number stored in the phonebook, the stored name in the phonebook is displayed and logged in the caller list.

Talking Caller ID

Handset / Base unit

This feature lets you know who is calling without looking at the display.
To use this feature, you must:
- subscribe to a Caller ID service of your phone service provider.
- turn this feature on (page 58).

When caller information is received, the handsets and/or base unit announce the caller's name or phone number received from your phone service provider following every ring.

- Name pronunciation may vary. This feature may not pronounce all names correctly.
- Caller ID service has a limit of how many characters can be displayed. If the caller's name is too long, the unit may not be able to display or announce the entire name.

Phonebook name announcement

When caller information is received and it matches a phone number stored in the phonebook, the stored name in the phonebook is announced.

Caller list

Important:

- Make sure the unit's date and time setting is correct (page 24).

Viewing the caller list and calling back

■ **Using a cellular line**

1. **[▼]** CID
2. Press **[▼]** to search from the most recent call, or **[▲]** to search from the oldest call.

3 To call back, press **[SELECT]**.
To exit, press **[OFF]**.

4 **[CELL]**
- The unit starts dialing immediately in the following situations.
  - Only 1 cellular phone is paired.
  - A specific line is set to make cellular calls (page 38).

5 **[▲▼]**: Select the desired cellular phone. → **[SELECT]**

■ **Using a landline**

1 **[▼]** CID

2 Press **[▼]** to search from the most recent call, or **[▲]** to search from the oldest call.

3 To call back, press **[TALK]**.
To exit, press **[OFF]**.

Note:

- If the entry has already been viewed or answered, "✓" is displayed.
- C1 or C2 indicates the caller information was received from the cellular line.

Editing a caller's phone number

You can edit a phone number in the caller list by removing its area code and/or the long distance code "1".

■ **When a cellular phone is paired:**

1 **[▼]** CID

2 **[▲▼]**: Select the desired entry. → **[SELECT]**

3 Press ⊠ (Edit) repeatedly until the phone number is shown in the desired format.

4 **Using a cellular line:**
To make a cellular call, continue from step 4, "Viewing the caller list and calling back", page 65.
Using a landline:
[TALK]

■ **When a cellular phone is not paired:**

1 **[▼]** CID

2 **[▲▼]**: Select the desired entry. → **[MENU]**

3 **[▲▼]**: "Edit" → **[SELECT]**

4 Press **[EDIT]** repeatedly until the phone number is shown in the desired format.

5 **[TALK]**

Caller ID number auto edit feature

Once you call back an edited number, the unit which was used to call back remembers the area code and format of the edited number. The next time someone calls from the same area code, caller information is customized by the unit as follows:

– When the call is being received, the Caller ID number is displayed in the same format as the edited number.
– After the call has ended, the caller's phone number is displayed in the same format as the edited number, when reviewed from the caller list.

For example, you can use this feature to set the unit to ignore the area code of callers in your area, so that you can call these local numbers using caller information without dialing the area code.
To activate this feature, you must edit an entry in the caller list, then call that number. After that, phone numbers from that caller's area code are edited automatically.
This feature can be set for each unit (page 60). The default setting is "On".

Note:

- Phone numbers from the 4 most recently edited area codes are automatically edited.

Erasing selected caller information

1 **[▼]** CID

2 **[▲▼]**: Select the desired entry.

3 **[ERASE]** → **[▲▼]**: "Yes" → **[SELECT]** → **[OFF]**

Erasing all caller information

1 [▼] CID

2 [ERASE] → [▲▼]: "Yes" → [SELECT] → [OFF]

Copying phonebook from a cellular phone (phonebook transfer)

You can copy phonebook entries from the paired cellular phones or other cellular phones (not paired) to the unit's phonebook. A cellular phone must be compatible with Bluetooth wireless technology.

Important:

- Your cellular phone must support Phone Book Access Profile (PBAP) or Object Push Profile (OPP) specification.
- If a copied entry has 2 or more phone numbers, each phone number (6 max.) is stored as a separate entry with the same name.
- If a phonebook entry includes additional data such as a picture, that entry may fail to copy to the base unit.
- If your cellular phone includes international call entries, set the conversion codes before copying (page 68).

1 **Handset:**
【MENU】#618

2 **Handset:**
To copy from paired cellular phones:
【▲▼】: Select the desired cellular phone. → **【SELECT】**
- Copied items are stored to the group (**"Cell 1"** or **"Cell 2"**) which the cellular phone is paired to.

To copy from other cellular phones (not paired):
【▲▼】: **"Other cell"** → **【SELECT】** → **【▲▼】**: Select the group you want to copy to. → **【SELECT】**

3 **Handset:**
When "Use the cell to transfer phone book" is displayed:
Go to step 4.
When "Select mode" menu is displayed:
【▲▼】: Select **"Auto"** or **"Manual"**. → **【SELECT】**
"Auto": Download all entries from the cellular phone automatically. Go to step 5.
"Manual": Copy entries you selected.
- **"Select mode"** menu is displayed only when the cellular phone supports Phone Book Access Profile (PBAP) for Bluetooth connection.
- Some cellular phones may require you to perform an operation on the cellular phone even if you select **"Auto"**.

4 **Cellular phone:**
Follow the instructions of your cellular phone to copy phonebook entries.
- For other cellular phones (not paired), you need to search for and select the base unit. The Bluetooth PIN (default: **"0000"**) may be required.
- If your cellular phone prompts you to confirm the passkey, tap **【OK】** or otherwise to accept the pairing request.
- The entries being copied are displayed on the handset.

5 **Handset:**
Wait until **"Completed"** is displayed.
- You can continue copying other entries if necessary.

6 **Handset: 【OFF】**

Note:

- Some copied entries may have characters which are not available. These characters can be displayed but cannot be entered when editing an entry.
- The unit does not support some characters. If a copied entry includes those characters, they are replaced with other available characters or "*".
- If you receive a call while copying phonebook entries, the copying procedure stops. Try again after finishing the call.

Setting conversion codes

You must first set the following 3 dialing codes before transferring the phonebook from your cellular phone (each 4 digits max.).

– **"International code"**: An international prefix used when you make an international call.
– **"Country code"**: Your country code for international calls.

– **"Trunk prefix"**: A trunk prefix; the initial digit(s) to be dialed in a domestic call, prior to the area code.

1 【MENU】

2 To store **"International code"**: #117
To store **"Country code"**: #118
To store **"Trunk prefix"**: #119

3 Enter the desired number. → 【SAVE】 → 【OFF】

Note:

- After you copy the entries, confirm that the numbers were transferred correctly.

Link to Cell app

For Android™ users

The free Link to Cell app helps you integrate your Android phone with your DECT phone for convenient use.

Important:

- Your cellular phone must support SPP (Serial Port Profile) specification.

■ **Application (App) Alerts On/Off**
This feature alerts your DECT phone when your paired Android phone receives the following alert information:
– **[Google Calendar]**™
– **[Gmail]**™
– **[Text messages]**
– **[Facebook]**
– **[Twitter]**
– **[Instagram]**
– **[Low Battery]** information
Please check the latest information for details on functions that can be alerted at the web page below.
https://panasonic.net/cns/pcc/support/tel/appalerts/

You can turn each type of alert on or off using the Link to Cell app. If you turn the alerting app on, your DECT phone alerts you with the corresponding information.

■ **Phone Settings**
Using your paired Android phone, you can program your Phone Settings for the following features:
– **[Time adjustment]***1
– **[Cell line only mode]** (page 37)
– **[International code]**, **[Country code]**, and **[Trunk prefix]** (page 68)

*1 When your paired Android phone is within the base unit's range, the date and time information is updated on the handset's display, if time adjustment feature is activated on your Android phone.

Installing the Link to Cell app

Download links are also available at the web page below.

https://panasonic.net/cns/pcc/support/tel/appalerts/

Starting the app for the first time

1 Make sure that your Android device's Bluetooth feature is turned on and that your Android device is paired to the base unit.

2 Start the Link to Cell app by tapping its icon.

3 Follow the on-screen instructions.

Important:

- For further information, refer to the instructions on web page listed above.
- To use this feature, the following settings are required.
  - **Android phone:** Bluetooth must be turned on.
  - **Android phone: [Application Alerts manager]** must be turned on.
  - **Handsket: "`Alert On/Off`"** must be turned on (page 70).
- If this feature does not work, turn on your device's Bluetooth feature, unplug the base unit's AC adaptor, and remove the batteries from the base unit. Then, reconnect AC adaptor and insert the batteries into the base unit.
- If this feature still does not work properly after performing the above operation, re-install the Link to Cell app.

Text message (SMS) alert

For iPhone® users

This feature alerts you on your DECT phone when your paired cellular phone receives SMS messages. The Link to Cell app is not required for **iPhone users**.

Important:

- Your cellular phone must support MAP (Message Access Profile) specification.
- For further information, refer to the instructions on web page listed below: www.panasonic.net/pcc/support/tel/sms/
- To use this feature, the following settings are required:
  - **iPhone:** Bluetooth must be turned on.
  - **Handsket: "`Alert On/Off`"** must be turned on (page 70).
- If this feature does not work, turn on your device's Bluetooth feature, unplug the base unit's AC adaptor, and remove the batteries from the base unit. Then, reconnect AC adaptor and insert the batteries into the base unit.

Alert settings for your DECT phone

If your cellular phone is paired to the base unit and receives notifications, the handset can alert you:
– by briefly displaying a message
– by announcement
– by sounding alert tones
Additionally, the message indicator flashes rapidly if the handset or base unit message indicator's **"`Application alert`"** setting is enabled (page 31).

Important:

- For Android users: Use the Link to Cell app to enable the desired alerts (page 69).

Turning alert on/off

Once this feature is turned on, it will alert you on the handset when your cellular phone receives notifications.
– **"`On`"** (default): The handset alerts you.
– **"`Off`"**: The handset does not alert you.

1 For CELL 1: **【MENU】**#6101
For CELL 2: **【MENU】**#6102

2 **【▲▼】**: Select the desired setting. → **【SAVE】** → **【OFF】**

Setting the voice alert

You can turn on/off the voice alert.
– **"`On`"** (default): The handset notifies you by voice announcement.
– **"`Off`"**: Voice announcement is not available as alert.

1 For CELL 1: **【MENU】**#6031
For CELL 2: **【MENU】**#6032

2 **【▲▼】**: Select the desired setting. → **【SAVE】** → **【OFF】**

Selecting the alert tone

1 For CELL 1: **【MENU】**#6041
For CELL 2: **【MENU】**#6042

2 **【▲▼】**: Select the desired setting. → **【SAVE】** → **【OFF】**

Using a Bluetooth headset (optional)

By pairing a Bluetooth headset to the base unit, you can enjoy hands-free conversations when talking on landline calls.

Important:

- Your Bluetooth headset must support the Headset Profile (HSP) specification.
- Only 1 Bluetooth headset can be paired to the base unit.
- Only 2 Bluetooth devices can be used with the unit at the same time (for example, 2 cellular lines, or the headset and 1 cellular line*1).
- For best performance, we recommend using your Bluetooth headset within 1 m (3.3 feet) of the base unit. The base unit can communicate with Bluetooth headsets within a approximately 10 m (33 feet) range.

*1 You cannot use a Bluetooth headset to talk on a cellular line.

Pairing a Bluetooth headset to the base unit

Important:

- Make sure that the Bluetooth headset is not connected to any other Bluetooth device.

1 **Bluetooth headset:**
Set your headset to pairing mode.
- Refer to your headset's operating instructions.

2 **Handset:**
【MENU】#6221

3 **If your headset's PIN is "0000",** go to step 4.
If your headset's PIN is not "0000", press **【CLEAR】**, then enter your headset's PIN.
- Typically, the default PIN is **"0000"**. Refer to the headset's operating instructions.

4 Press **【OK】**, then wait until a long beep sounds.

5 **【OFF】**
- When the Bluetooth headset is ready for use:
  - ᛒH is displayed on the handset (H: Bluetooth headset),
  - the CELL 2/HEADSET indicator on the base unit lights up.

Connecting/disconnecting a Bluetooth headset

If you cannot connect the headset and base unit using the headset, you can connect using the handset.
To use your headset with another Bluetooth device such as a cellular phone, you may need to disconnect it from the base unit.

Important:

- Make sure that the headset is turned on.

1 **To connect/disconnect:**
【MENU】#622
- A long beep sounds.

2 **【OFF】**

Unpairing a Bluetooth headset

You can cancel a pairing of the headset that is stored to the base unit.

1 **【MENU】**#612

2 **【▲▼】: "Yes" → 【SELECT】**
- When the headset is unpaired, ᛒH disappears on the handset.

3 **【OFF】**

Operating a Bluetooth headset using a landline

Important:

- Refer to your headset's operating instructions for details.

Making landline calls with your headset

Base unit

1 Press your headset's button referring to your headset's operating instructions.

2 Press the desired memory dial key (【M1】 to 【M3】).

3 When you finish talking, press your headset's button referring to your headset's operating instructions.

Note:

- If you cannot hang up the call using your headset, press 【🔊】 on the base unit 2 times.

Answering landline calls with your headset

To answer a landline call, press your headset's button referring to your headset's operating instructions.
When you finish talking, press your headset's button referring to your headset's operating instructions.

Switching between the base unit and your headset

You can switch between the base unit and your headset:
– during a landline call with the base unit speakerphone.
– during an intercom call between the base unit and handset.
– while listening to messages recorded on the base unit answering system.

■ **To switch to your headset:**
Turn on the headset referring to your headset's operating instructions.

■ **To switch to the base unit:**
Press 【🔊】 on the base unit.

Call sharing between your headset and the handset

Important:

- To activate this feature, you should set call sharing mode to on beforehand (page 61).

■ **While the handset is on a landline call:**
To join the conversation with your headset, press your headset's button referring to your headset's operating instructions.

■ **While your headset is on a landline call:**
To join the conversation with the handset, press 【TALK】.

Adjusting your headset receiver volume

Base unit

Press 【+】 or 【−】 repeatedly while using your headset.

Note:

- Depending on your headset, the receiver volume may not be adjustable.

Answering system for landline

The answering system can answer and record calls for you when you are unavailable to answer the phone.
You can also set the unit to play a greeting message but not to record caller messages by selecting "**Greeting only**" as the recording time setting (page 79).

Important:

- Make sure the unit's date and time setting is correct (page 24).

Memory capacity (including your greeting message)

The total recording capacity is about 18 minutes. A maximum of 64 messages can be recorded.

Note:

- When message memory becomes full:
  - "**Messages full**" is shown on the handset display.
  - The message counter and the ANSWER ON/OFF indicator (⏺) on the base unit flashes if the answering system is turned on.
  - If you use the pre-recorded greeting message, the unit automatically switches to another pre-recorded greeting message asking callers to call again later.
  - If you recorded your own greeting message, the same message is still announced to callers even though their messages are not recorded.

Turning the answering system on/off

Base unit

Press **[ANSWER ON/OFF]** to turn on/off the answering system.

Handset

1 **To turn on:**
[MENU]#32 7
To turn off:
[MENU]#32 8

2 **[OFF]**

Note for base unit and handset:

- When the answering system is turned on,
  - the ANSWER ON/OFF indicator (⏺) on the base unit lights up.
  - the message counter on the base unit displays the total number of messages (old and new).

Greeting message

When the unit answers a call, a greeting message is played to callers.
You can use either:
– your own greeting message
– a pre-recorded greeting message

Recording your greeting message

1 **[MENU]**#302

2 **[▲▼]**: "**Yes**" → **[SELECT]**

3 After a beep sounds, hold the handset about 20 cm (8 inches) away and speak clearly into the microphone (2 minutes max.).

4 Press **[STOP]** to stop recording. → **[OFF]**

Using a pre-recorded greeting message

The unit provides 2 pre-recorded greeting messages:
– If you reset to pre-recorded greeting or do not record your own greeting message, the unit plays a pre-recorded greeting asking callers to leave a message.
– If the message recording time (page 79) is set to "**Greeting only**", callers' messages are not recorded and the unit plays a different pre-recorded greeting message asking callers to call again.

Resetting to a pre-recorded greeting message

Use this procedure to erase your greeting message and use a pre-recorded one.

1 [MENU]#304
2 [YES] → [OFF]

Playing back the greeting message

1 [MENU]#303
2 To exit, press [OFF].

Listening to messages

Important:
- When using the base unit or handset to listen to messages, the noise reduction feature (page 42) is activated automatically in spite of the setting (NR is not displayed).

Using the base unit

When new messages have been recorded:
– The new message/play indicator (▶) on the base unit flashes.
– The message indicator on the base unit flashes slowly if the base unit message indicator's "**New message**" setting is enabled (page 31).

Press [►■] (PLAY).
- During playback, the new message/play indicator (▶) on the base unit lights.
- If new messages have been recorded, the base unit plays back new messages.
- If there are no new messages, the base unit plays back all messages.

Operating the answering system during playback

Key	Operation
[+] or [−]	Adjust the speaker volume
[⏮]	Repeat message*1
[⏭]	Skip message
[►■] (STOP)	Stop playback
[ERASE/MUTE]	Erase currently playing message

*1 If pressed within the first 5 seconds of a message, the previous message is played.

Erasing all messages

Press [ERASE/MUTE] 2 times while the unit is not in use.

Using the handset

When new messages have been recorded:
– "**New message**" is displayed.
– The message indicator on the handset flashes slowly if the handset message indicator's "**New message**" setting is enabled (page 31).

1 **To listen to new messages:**
[MENU]#323
To listen to all messages:
[MENU]#324
2 When finished, press [OFF].

Note:
- To switch to the receiver, press [🔊].
- You can also use the [PLAY] soft key, if displayed, to play new messages.

Operating the answering system

[MENU] → **[▲▼]**: "**Answering device**" → **[SELECT]**

Key	Operation
[+] or **[−]**	Adjust the receiver/speaker volume (during playback)
1 or **[◄]**	Repeat message (during playback)*1
2 or **[►]**	Skip message (during playback)
3	Enter the "**Settings**" menu
4	Play new messages
5	Play all messages
6	Play greeting message
7 6	Record greeting message
8	Turn answering system on
[PAUSE]	Pause message*2
9 or **[STOP]**	Stop recording Stop playback
0	Turn answering system off
* 4 *3	Erase currently playing message
* 5	Erase all messages
* 6	Reset to a pre-recorded greeting message

*1 If pressed within the first 5 seconds of a message, the previous message is played.

*2 To resume playback:
[▲▼]: "**Playback**" → **[SELECT]**

*3 You can also erase as follows:
[PAUSE] → **[▲▼]**: "**Erase**" → **[SELECT]** → **[▲▼]**: "**Yes**" → **[SELECT]**

Calling back (Caller ID subscribers only)

■ **Using a landline:**

1 Press **[PAUSE]** during playback.

2 **[▲▼]**: "**Call back**" → **[SELECT]**

■ **Using a cellular line:**

1 Press **[PAUSE]** during playback.

2 **[▲▼]**: "**Call back (Cell)**" → **[SELECT]**
- The unit starts dialing immediately in the following situations.
  - Only 1 cellular phone is paired.
  - A specific line is set to make cellular calls (page 38).

3 **[▲▼]**: Select the desired cellular phone. → **[SELECT]**

Editing the number before calling back

■ **Using a landline:**

1 Press **[PAUSE]** during playback.

2 **[▲▼]**: "**Edit & Call**" → **[SELECT]**

3 Press **[EDIT]** repeatedly until the phone number is shown in the desired format (page 66). → **[TALK]**

■ **Using a cellular line:**

1 Press **[PAUSE]** during playback.

2 **[▲▼]**: "**Edit & Call**" → **[SELECT]**

3 Press **[EDIT]** repeatedly until the phone number is shown in the desired format (page 66).

4 **[CELL]**
- The unit starts dialing immediately in the following situations.
  - Only 1 cellular phone is paired.
  - A specific line is set to make cellular calls (page 38).

5 **[▲▼]**: Select the desired cellular phone. → **[SELECT]**

Erasing all messages

1 **[MENU]** # 3 2 5

2 **[▲▼]**: "**Yes**" → **[SELECT]** → **[OFF]**

Advanced new message alerting features

Audible message alert

This feature allows the base unit to beep to inform you of a new message arrival when new messages are recorded. The base unit beeps 2 times every minute until you listen to the messages, if the "**Base unit beep**" setting is turned on. The default setting is "**Off**".

1 [MENU]#339
2 [▲▼]: Select the desired setting. → [SAVE] → [OFF]

New message alert by a call

This feature allows you to receive a notification by phone when new messages are recorded. The base unit calls a phone number you specify. You can then operate the answering system remotely to listen to the new message.
To use this feature, you must:
– store a phone number to which the unit makes the call to.
– turn on the new message alert setting.
After you answer the new message alert call, you can listen to messages from that call (page 77).
This feature is only available for landline.

Important:

- A new message alert is stopped 1 minute after the unit starts to call. The unit will not retry the call even if the call is not answered.

Storing a phone number to which the unit makes an alert call

■ **From the phonebook:**

1 [MENU]#338
2 [▲▼]: "**Notification to**" → [SELECT] → [ADD]
3 [▲▼]: "**Phonebook**" → [SELECT]
4 [▲▼]: Select the desired phonebook entry. → [SAVE] → [OFF]

■ **By entering a phone number:**

1 [MENU]#338
2 [▲▼]: "**Notification to**" → [SELECT] → [ADD]
3 [▲▼]: "**Manual**" → [SELECT]
4 Enter the desired name (16 characters max.). → [OK]
5 Enter the desired number (24 digits max.). → [OK] → [SELECT] → [OFF]

Turning on/off the new message alert setting

1 [MENU]#338
2 [▲▼]: "**On/Off**" → [SELECT]
3 [▲▼]: Select the desired setting. → [SAVE] → [OFF]

Editing the set phone number

1 [MENU]#338
2 [▲▼]: "**Notification to**" → [SELECT]
3 [MENU] → [▲▼]: "**Edit**" → [SELECT]
4 Edit the name if necessary (16 characters max.). → [OK]
5 Edit the phone number if necessary (24 digits max.). → [OK] → [SELECT] → [OFF]

Erasing the set phone number

1 [MENU]#338
2 [▲▼]: "**Notification to**" → [SELECT]
3 [MENU] → [▲▼]: "**Erase**" → [SELECT]
4 [▲▼]: "**Yes**" → [SELECT] → [OFF]
- The new message alert setting is turned off.

Activating/inactivating the remote access code to play messages

If you activate this feature, you must enter the remote access code (page 77) to play the new message from the new message alert call. This is so that unauthorized parties cannot listen to your messages. The default setting is "Inactivate".

– "Inactivate": You can listen to the message by pressing 4 to play new messages (without entering the remote access code).
– "Activate": You must enter your remote access code and then press 4 to play new message.

1 [MENU] # 3 3 8
2 [▲▼]: "Remote code" → [SELECT]
3 [▲▼]: Select the desired setting. → [SAVE] → [OFF]

Listening to messages

After you answer the new message alert, you can listen to the messages as follows.

■ **When the remote access code is set to "Inactivate":**
Press 4 to play the new message during the announcement.

■ **When the remote access code is set to "Activate":**

1 Enter the remote access code (page 77) during the announcement.
2 Press 4 to play the new message.

Note:

- Within 10 seconds after listening to new messages, you can press # 9 during the call to turn off the new message alert by a call feature.
- Even if the unit makes a new message alert call, the handset redial list does not show the record.

Remote operation

Using a touch-tone phone, you can call your phone number from outside and access the unit to listen to messages or change answering system settings. The unit's voice guidance prompts you to press certain dial keys to perform different operations.

Remote access code

A 3-digit remote access code must be entered when operating the answering system remotely. This code prevents unauthorized parties from listening to your messages remotely. The default setting is "111".

Important:

- To prevent unauthorized access to this product, we recommend that you regularly change the remote code.

1 [MENU] # 3 0 6
2 Enter the desired 3-digit remote access code. → [SAVE] → [OFF]

Deactivating remote operation

Press ✕ in step 2 on "Remote access code", page 77.

- The entered remote access code is deleted.

Using the answering system remotely

1 Dial your landline phone number from a touch-tone phone.
2 After the greeting message starts, enter your remote access code.
3 Follow the voice guidance prompts as necessary or control the unit using remote commands (page 78).
4 When finished, hang up.

Voice guidance

■ **When the English voice guidance is selected**
During remote operation, the unit's voice guidance starts and prompts you to press

1 to perform a specific operation, or press 2 to listen to more available operations.

■ **When the Spanish voice guidance is selected**
To start the voice guidance, press 9. The voice guidance announces the available remote commands (page 78).

Note:

- If you do not press any dial keys within 10 seconds after a voice guidance prompt, the unit disconnects your call.

Remote commands

You can press dial keys to access certain answering system functions without waiting for the voice guidance to prompt you.

Key	Operation
1	Repeat message (during playback)*1
2	Skip message (during playback)
4	Play new messages
5	Play all messages
9	Stop playback*2 Start voice guidance*3
0	Turn answering system off
✱4	Erase currently playing message
✱5	Erase all messages
✱#	End remote operation (or hang up)

*1 If pressed within the first 5 seconds of a message, the previous message is played.
*2 For English voice guidance only
*3 For Spanish voice guidance only

Turning on the answering system remotely

1 Dial your phone number from a touch-tone phone.

2 Let the phone ring 15 times.
- A long beep is heard.

3 Enter your remote access code within 10 seconds after the long beep.
- The greeting message is played back.
- You can either hang up, or enter your remote access code again and begin remote operation (page 77).

Answering system settings

Call screening

While a caller is leaving a message, you can listen to the call through the unit's speaker.
To adjust the speaker volume, press **[+]** or **[−]** repeatedly.
You can answer the call by pressing **[TALK]** on the handset or **[🔈]** on the base unit.
Call screening can be set for each unit. The default setting is "**On**".

1 **For handset: [MENU]#310**
For base unit (using a handset): [MENU]#✱310

2 **[▲▼]**: Select the desired setting. → **[SAVE]** → **[OFF]**

Number of rings before the unit answers a call

You can change the number of times the phone rings "**Ring count**" before the unit answers calls. You can select 2 to 7 rings, or "**Toll saver**".
The default setting is "**4 rings**".
"**Toll saver**": The unit's answering system answers at the end of the 2nd ring when new messages have been recorded, or at the end of the 5th ring when there are no new messages. If you call your phone from outside to listen to new messages (page 77), you know that there are no new messages when the phone rings for the 3rd time. You can then hang up without being charged for the call.

1 **[MENU]#211**

2 **[▲▼]**: Select the desired setting. → **[SAVE]** → **[OFF]**

Caller's recording time

You can change the maximum message recording time allowed for each caller. The default setting is "**3 min**".

1 **[MENU]**#305

2 **[▲▼]**: Select the desired setting. → **[SAVE]** → **[OFF]**

Selecting "Greeting only"

You can select "**Greeting only**" which sets the unit to announce a greeting message to callers but not record messages.
Select "**Greeting only**" in step 2 on "Caller's recording time", page 79.

Note:

- When you select "**Greeting only**":
  - If you do not record your own message, the unit will play the pre-recorded greeting-only message asking callers to call again later.
  - If you use your own message, record the greeting-only message asking callers to call again later (page 73).

Voicemail service for landline

In addition to your unit's answering system you may also have voicemail service from your phone service provider. Voicemail is an answering service that may be offered by your phone service provider. This service can also record calls when you are unavailable to answer the phone or when your line is busy. Messages are recorded on the phone company system and not on the unit's answering system.

- To use the voicemail service rather than the unit's answering system, turn off the answering system (page 73).

If you have unit's answering system set to on and also the voicemail enabled, the system with least amount of rings will record the message first.

Example:
If the unit's answering system is set to 4 rings (page 78) and the voicemail answering system provided by your phone company is set to 6 rings (call your service provider), the unit's answering system will record the incoming call first.

Important:

- You need to store the voicemail access number in order to light the handset and base unit's message indicator when a new voicemail is received (page 31).

Storing the voicemail (VM) access number

In order to listen to your voicemail messages, you must dial your phone service provider's voicemail access number. Once you have stored your voicemail access number, you can dial it automatically (page 81).

1 【MENU】#331

2 Enter your access number (24 digits max.). → 【SAVE】 → 【OFF】

Note:

- When storing your voicemail access number and your mailbox password, press 【▲】 (Pause) to add pauses (page 40) between the access number and the password as necessary. Contact your phone service provider for the required pause time.

Example:

1-222-333-4444	PPPP	8888
VM access number	Pauses	Password

To erase the voicemail access number

1 【MENU】#331

2 Press and hold 【CLEAR】 until all digits are erased. → 【SAVE】 → 【OFF】

Voicemail (VM) tone detection

Your phone service provider sends special signals (sometimes called "voicemail tones" or "stutter tones") to the unit to let you know you have new voicemail messages. If you hear a series of dial tones followed by a continuous dial tone after you press 【TALK】 on the handset or press 【🔊】 on the base unit, you have new voicemail messages. Soon after you hang up a call or after the phone stops ringing, your unit checks the phone line to see if new voicemail messages have been recorded.
Turn this feature off when:
– You do not subscribe to voicemail service.
– Your phone service provider does not send voicemail tones.
– Your phone is connected to a PBX.
If you are not sure which setting is required, contact your phone service provider.

Turning VM tone detection on/off

The default setting is "On".

1 【MENU】#332

2 【▲▼】: Select the desired setting. → 【SAVE】 → 【OFF】

Listening to voicemail messages

When new messages have been recorded:
– **"Voicemail msg. via phone co."** is displayed if message indication service is available.
– The message indicator flashes slowly if the handset or base unit message indicator's **"New VM"** setting is enabled (page 31).

1 【MENU】#330
- The speakerphone turns on.

2 Follow the pre-recorded instructions.

3 When finished, hang up.

Note:
- You can also use the 【ACCESS】 soft key, if displayed, to play new voicemail messages.
- If the handset still indicates there are new messages even after you have listened to all new messages, turn it off by pressing and holding # until the handset beeps.

Wall mounting

Note:
- Make sure that the wall and the fixing method are strong enough to support the weight of the unit.

1 Lead the AC adaptor cord and telephone line cord through the hole in the wall mounting adaptor in the direction of the arrow.

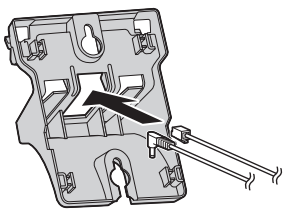

2 Tuck the telephone line cord inside the wall mounting adaptor (❶). Connect the AC adaptor cord and telephone line cord (❷).
Ⓐ AC adaptor cord

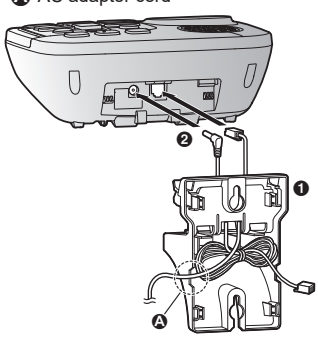

3 Insert the hooks on the wall mounting adaptor into holes (Ⓐ) and (Ⓑ) on the base unit.

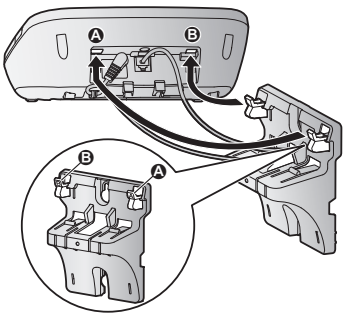

4 Adjust the adaptor to hold the base unit, then push it in the direction of the arrow until it clicks into place.

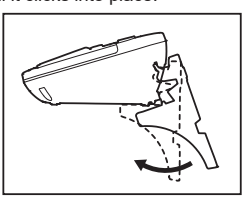

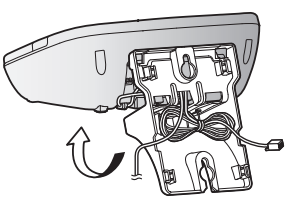

5 Mount the unit on a wall then slide down to secure in place.

Ⓐ AC adaptor cord

- This product is compliant with the following wall phone plate sizes (2 types).
  Ⓑ 83 mm (3 1/4 inches)
  Ⓒ 102 mm (4 inches)

Fit the slots of the unit onto the corresponding wall phone plate tabs for (Ⓓ) and (Ⓔ) respectively.

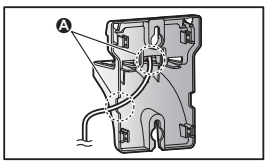

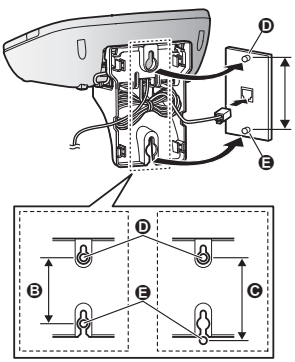

To remove the wall mounting adaptor

While pushing down the release levers (❶), remove the adaptor (❷).

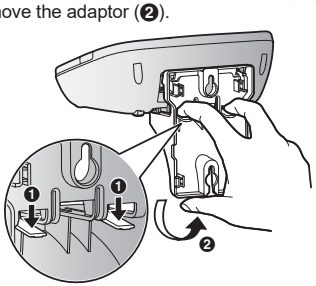

Error messages

Display message	Cause/solution
Ask phone company for VM access #	● You have not stored the voicemail access number. Store the number (page 80).
Busy	● No cellular phone is paired to the base unit. Pair a cellular phone (page 35). ● The called unit is in use. ● Other units are in use and the system is busy. Try again later. ● The handset you are using is too far from the base unit. Move closer and try again. ● Only 2 Bluetooth devices can be used with the unit at the same time (for example, 2 cellular lines, or the headset and 1 cellular line).
Check tel line	● The supplied telephone line cord has not been connected yet or not connected properly. Check the connections (page 13). ● If you do not connect the telephone line cord and use only cellular lines, set the cellular line only mode (page 37).
Error!!	● Recording was too short. Try again. ● Someone is using a cellular line or Bluetooth headset. Try again later. ● The phonebook copy is incomplete (page 68). The cellular phone is disconnected from the base unit. Make sure that other Bluetooth devices are not connected to the cellular phone, and try again.
Failed	● Although the unit tried to connect to the cellular phone or Bluetooth headset, the connection has been failed. – Someone is using a cellular line or headset. Try again later. – Make sure that the cellular phone or headset is not connected to other Bluetooth devices.
Invalid	● There is no handset registered to the base unit matching the handset number you entered. ● The handset is not registered to the base unit. Register the handset (page 64).
Main unit no power or **No link. Re-connect base AC adaptor.**	● Confirm the base unit's AC adaptor is connected to the unit and the power outlet correctly. ● The handset has lost communication with the base unit. Move closer to the base unit and try again. ● Unplug the base unit's AC adaptor to reset the unit. Reconnect the adaptor and try again. ● The handset's registration may have been canceled. Re-register the handset (page 64).
Requires subscription to Caller ID.	● You must subscribe to a Caller ID service. Once you receive caller information after subscribing to a Caller ID service, this message will not be displayed.

Display message	Cause/solution
`Use rechargeable battery.`	● A wrong type of battery such as alkaline or manganese was inserted. Use only the rechargeable Ni-MH batteries noted on page 5, 9.

Troubleshooting

If you still have difficulties after following the instructions in this section, disconnect the base unit's AC adaptor, then reconnect the base unit's AC adaptor. Remove the batteries from the handset, and then insert them into the handset again.
If the base unit batteries for power backup are installed, remove the batteries from the base unit, and then insert them into the base unit again.

General use

Problem	Cause/solution
The handset does not turn on even after installing charged batteries.	● Place the handset on the base unit or charger to turn on the handset.
The unit does not work.	● Make sure the batteries are installed correctly (page 15). ● Fully charge the batteries (page 14). ● Check the connections (page 13). ● Unplug the base unit's AC adaptor to reset the unit. Reconnect the adaptor and try again. ● The handset has not been registered to the base unit. Register the handset (page 64).
I cannot pair a cellular phone to the base unit.	● Depending on the compatibility of the cellular phone, you may not be able to pair it to the base unit. Confirm that your cellular phone supports the hands-free profile (HFP) specification. ● Confirm that the Bluetooth feature of your cellular phone is turned on. You may need to turn this feature on depending on your cellular phone. ● The Bluetooth technology on your cellular phone may not be functioning normally. Turn off and on your cellular phone. ● If your cellular phone is already connected to another Bluetooth device such as a Bluetooth headset, turn it off or disconnect it from your cellular phone. ● Some cellular phones may require you to enter the Bluetooth PIN to pairing. Confirm that you entered the correct PIN.

Problem	Cause/solution
I cannot connect a cellular phone to the base unit.	● Confirm that your cellular phone is turned on. ● Confirm that your cellular phone is within base unit range (page 21, 35). ● Your cellular phone's Bluetooth feature is turned off. Turn it on. ● Depending on the state of the wireless environment, such as the presence of any electrical interference, there may be a delay even if the auto connection feature is turned on. You can connect to the base unit manually (page 37). ● The cellular phone has not been paired to the base unit. Pair the cellular phone (page 35). ● If your cellular phone is already connected to another Bluetooth device such as a Bluetooth headset or other Panasonic DECT phone, disconnect the device, then perform the connecting procedure to the base unit. ● If your cellular phone is already registered on another Panasonic DECT phone, this function will not work properly. We strongly recommend that you remove the registration of this phone on both your cellular phone and on the other Panasonic DECT phone.
I cannot hear a dial tone.	● Make sure that the CELL indicator lights up on the base unit and ✱1/2 is displayed on the handset (page 21, 22). ● The base unit's AC adaptor or telephone line cord is not connected. Check the connections. ● Disconnect the base unit from the telephone line and connect the line to a known working telephone. If the working telephone operates properly, contact our service personnel to have the unit repaired. If the working telephone does not operate properly, contact your phone service provider.
The indicator on the handset or base unit flashes slowly.	● New messages have been recorded. Listen to the new messages (page 74). ● New voicemail messages have been recorded. Listen to the new voicemail messages (page 81).
The base unit beeps.	● New messages have been recorded. Listen to the new messages (page 74).
The unit does not work during a power failure.	● The batteries inserted in the base unit are depleted. You can insert 2 alkaline batteries into the base unit to provide backup power. Remove the alkaline batteries and reinsert the rechargeable batteries when power is restored (page 16).

Accessibility

Problem	Cause/solution
I cannot search the phonebook, caller list, redial list, memory dial, or call block list.	● Other units are in use and the system is busy. Try again later.
The unit does not announce names or phone numbers when I search the phonebook, caller list, etc.	● The default setting for the talking keypad and phonebook feature is "**Off**". Change the setting (page 29). ● Other units are in use and the system is busy. Try again later.
The announcement is in a language I cannot understand.	● Change the voice announcement language (page 23).
The announcement is too low to be heard.	● Change the talking keypad and phonebook setting to "**High**" (page 30).
I cannot use the slow talk feature.	● Other units are in use and the system is busy. Try again later.
When using a neckloop, whistling or feedback is heard, or the other party cannot hear your voice.	● The headset type is set to "**Headset**" or "**Neckloop with Mic**". Select "**Neckloop w/o Mic**" (page 33).
When using a headset, the other party says that your voice is very quiet or sounds far away.	● The headset type is set to "**Neckloop w/o Mic**". Select "**Headset**" (page 33).
When using a neckloop with a built-in microphone, the other party says that your voice is very quiet or sounds far away.	● The headset type is set to "**Neckloop w/o Mic**". Select "**Neckloop with Mic**" (page 33).

Menu list

Problem	Cause/solution
The display is in a language I cannot read.	● Change the display language (page 23).
I cannot register a handset to a base unit.	● The maximum number of handsets (6) is already registered to the base unit. Cancel unused handset registrations from the base unit (page 64).

Battery recharge

Problem	Cause/solution
The handset beeps and/or flashes.	● Battery charge is low. Fully charge the batteries (page 14).

Problem	Cause/solution
I fully charged the batteries, but – still flashes, – is displayed, or – the operating time seems to be shorter.	● Clean the battery ends (⊕, ⊖) and the charge contacts with a dry cloth and charge again. ● It is time to replace the batteries (page 15).

Making/answering calls, intercom

Problem	Cause/solution
is displayed.	● The handset is too far from the base unit. Move closer. ● The base unit's AC adaptor is not properly connected. Reconnect AC adaptor to the base unit. ● The handset is not registered to the base unit. Register it (page 64).
Noise is heard, sound cuts in and out.	● You are using the handset or base unit in an area with high electrical interference. Re-position the base unit and use the handset away from sources of interference. ● Move closer to the base unit. ● If you use a DSL/ADSL service, we recommend connecting a DSL/ADSL filter between the base unit and the telephone line jack. Contact your DSL/ADSL provider for details.
The handset or base unit does not ring.	● The ringer volume for landline is turned off. Adjust the ringer volume (page 41, 57). ● The ringer volume for cellular line is turned off. Adjust the ringer volume (page 41, 55). ● The unit which is not selected to ring for cellular calls does not ring. To change the selection, see page 36. ● Silent mode is turned on. Turn it off (page 63). ● The ringer volume is turned off by pressing and holding 0 (🔕). Press and hold 0 (🔕) again to turn it on (page 41). ● The ringer volume is turned off by pressing **[RINGER OFF]**. Press **[RINGER OFF]** again to turn it on (page 41).
I cannot make local calls with the handset or base unit using a cellular line.	● You need to add your area code when making cellular calls. Store your area code in order to automatically add it to the beginning of the 7-digit phone number when making cellular calls (page 38).

Problem	Cause/solution
I cannot make or answer cellular calls with the handset or base unit.	● Depending on the cellular phone's compatibility (page 6), you may not be able to make or answer cellular calls even if the cellular phone is connected to the base unit. ● Make sure that the CELL indicator lights up on the base unit and ✱1/2 is displayed on the handset (page 21, 22). ● Make sure that the cellular phone is connected to the base unit (page 37). ● Only 2 Bluetooth devices can be used with the unit at the same time (for example, 2 cellular lines, or the headset and 1 cellular line). ● The cellular phone is being used separately from your system.
I can make and answer cellular calls but cannot hear a sound.	● The Bluetooth technology on your cellular phone may not be functioning normally. Turn off and on your cellular phone.
I cannot switch cellular calls from the unit to the cellular phone.	● Your cellular phone may not support this feature. Refer to the operating instructions of your cellular phone.
I cannot make a call using a landline.	● The dialing mode may be set incorrectly. Change the setting (page 25).
I cannot use a cellular line or a landline.	● The unit can be used to talk on 2 lines at the same time (for example, 2 cellular lines, or the landline and 1 cellular line).
I cannot make long distance calls.	● Make sure that you have long distance service.
I cannot use voice paging.	● You cannot use voice paging if other units are in use. ● Voice paging is not available when a range extender (KX-TGA407) is registered to the base unit.

Caller ID/Talking Caller ID

Problem	Cause/solution
Caller information is not displayed.	● You must subscribe to Caller ID service. Contact your phone service provider for details. ● If your unit is connected to any additional telephone equipment such as a Caller ID box or cordless telephone line jack, plug the unit directly into the wall jack. ● If you use a DSL/ADSL service, we recommend connecting a DSL/ADSL filter between the base unit and the telephone line jack. Contact your DSL/ADSL provider for details. ● The name display service for landline calls may not be available in some areas. Contact your phone service provider for details. ● Other telephone equipment may be interfering with this unit. Disconnect the other equipment and try again.

Problem	Cause/solution
Caller information is displayed or announced late.	● Depending on your phone service provider, the unit may display or announce the caller's information at the 2nd ring or later. ● Move closer to the base unit.
Caller information is not announced.	● The ringer volume for landline is turned off. Adjust the ringer volume (page 57). ● The ringer volume for cellular line is turned off. Adjust the ringer volume (page 55). ● The unit which is not selected to ring for cellular calls does not announce caller information. To change the selection, see page 36. ● The Talking Caller ID feature is turned off. Turn it on (page 58). ● The ring as cell mode is set to "**On (without Talking CID)**". To change the mode, see page 36. ● The number of rings for the answering system is set to "**2 rings**" or "**Toll saver**". Select a different setting (page 78). ● Your unit does not announce caller information while the other devices such as Bluetooth headset or handsets are engaged in a call.
The caller list/incoming phone numbers are not edited automatically.	● The Caller ID number auto edit feature is turned off. Turn it on and try again (page 60). ● You need to call back the edited number to activate Caller ID number auto edit.
I cannot dial the phone number edited in the caller list.	● The phone number you dialed might have been edited incorrectly (for example, the long distance "1" or the area code is missing). Edit the phone number with another pattern (page 66).
Time on the unit has shifted.	● Incorrect time information from incoming Caller ID changes the time. Set the time adjustment to "**Manual**" (off) (page 58).
The 2nd caller's information is not displayed during an outside call.	● In order to use Caller ID, call waiting, or Call Waiting Caller ID (CWID), you must first contact your phone service provider and subscribe to the desired service. After subscribing, you may need to contact your phone service provider again to activate this specific service, even if you already subscribed to both Caller ID and Call Waiting with Caller ID services (CWID).

Using Bluetooth devices

Problem	Cause/solution
I cannot copy phonebook entries from a cellular phone.	● Confirm that the cellular phone supports Bluetooth wireless technology. ● Confirm that the cellular phone supports the Phone Book Access Profile (PBAP) or Object Push Profile (OPP) specification. ● If the cellular phone is already connected to another Bluetooth device such as a Bluetooth headset, turn it off or disconnect it from the cellular phone. ● Someone is using a cellular line or Bluetooth headset. Try again later. ● Turn the cellular phone off, then turn it on and try again. ● If an entry is already stored in the unit's phonebook, the entry cannot be copied even by selecting another group. ● iPhone does not support individual phonebook copy.
I cannot have a conversation using the Bluetooth headset. or I cannot connect my Bluetooth headset to the base unit.	● Confirm that the Bluetooth wireless headset supports the HeadSet Profile (HSP) specification. ● Your headset is not paired. Pair it (page 71). ● Turn your headset off, then turn it on and try again. ● If your headset is already connected to another Bluetooth device such as your cellular phone, disconnect the headset from your cellular phone, then perform the connecting procedure from the base unit. ● Only 2 Bluetooth devices can be used with the unit at the same time (for example, 2 cellular lines, or the headset and 1 cellular line).
Noise is heard during a call on the Bluetooth headset.	● A Bluetooth headset can communicate with the base unit within a range of approximately 10 m (33 feet). The connection may be subject to interference from obstructions such as walls or electronic devices. Move closer to the base unit.
Some Bluetooth headset enhanced features are not available.	● The base unit does not support enhanced features such as Last number redial or Call reject.
An error tone is heard when I try to program the Bluetooth feature.	● The Bluetooth feature cannot be accessed immediately after connecting the AC adaptor to the base unit. Wait a few seconds and try again. ● The headset has not connected to the base unit yet, even though you performed the connecting procedure setting. Wait a few seconds and try again.

Problem	Cause/solution
App alert is not displayed or announced. or Text message alert is not displayed or announced.	● Confirm that the cellular phone supports the Message Access Profile (MAP) specification to use text message alert feature. ● Confirm that the cellular phone supports the Serial Port Profile (SPP) specification to use App alert feature. ● Confirm that the **[Application Alerts manager]** setting of your Android phone is turned on. ● **"Alert On/Off"** is set to **"Off"**. Set it to **"On"** (page 70). ● **"Voice alert"** is set to **"Off"**. Set it to **"On"** (page 70). ● The Bluetooth device's Bluetooth notifications setting is turned off. ● The handset selected to display and/or announce alerts is in use. ● The Bluetooth device or its corresponding cellular line is in use. ● Your cellular phone's Bluetooth feature is turned off. Turn it on. ● The unit which is not selected to ring for cellular calls does not ring. To change the selection, see page 36.

Answering system

Problem	Cause/solution
The unit does not record new messages.	● The answering system is turned off. Turn it on (page 73). ● The answering system does not answer or record calls from cellular lines. ● The message memory is full. Erase unnecessary messages (page 74, 75). ● The recording time is set to **"Greeting only"**. Change the setting (page 79). ● Your phone service provider's voicemail service may be answering your calls before the unit's answering system can answer your calls. Change the unit's number of rings setting (page 78) to a lower value, or contact your phone service provider. ● The answering system will not answer incoming calls while the other devices such as Bluetooth headset or handsets are engaged in a call.
I cannot operate the answering system remotely.	● The remote access code is not set. Set the remote access code (page 77). ● You are entering the wrong remote access code. If you have forgotten your remote access code, enter the remote access code setting to check your current code (page 77). ● The answering system is turned off. Turn it on (page 78). ● You cannot operate the answering system when calling a cellular phone paired to the base unit.

Problem	Cause/solution
The unit does not emit the specified number of rings.	● If the first ring is turned off (“No”) (page 47), the number of rings decreases by 1 from the specified number of rings.

Bluetooth PIN

Problem	Cause/solution
I cannot remember the PIN.	● Change the PIN using the following method. **1** 【MENU】#619 **2** *7000 **3** Enter the new 4-digit PIN. → 【OK】 **4** Enter the new 4-digit PIN again. → 【SAVE】 → 【OFF】

Voicemail

Problem	Cause/solution
“Voicemail msg. via phone co.” is shown on the handset display. How do I remove this message from the display?	● This notification is displayed when your phone service provider’s voicemail service (not the unit’s answering system) has recorded a message for you. Typically you can remove this notification from the display by listening to the message. To listen to the message, dial the voicemail number provided by your phone service provider (for most cases, this will be your own phone number), and follow the voice instructions. Depending on your phone service provider, you may need to remove all messages from your voice mailbox to remove the notification. You can also remove this notification by pressing and holding # until the unit beeps.

Liquid damage

Problem	Cause/solution
Liquid or other form of moisture has entered the handset/base unit.	● Disconnect the AC adaptor and telephone line cord from the base unit. Remove the batteries from the base unit and handset and leave to dry for at least 3 days. After the handset/base unit are completely dry, reconnect the AC adaptor and telephone line cord. Insert the batteries and charge fully before use. If the unit does not work properly, contact an authorized service center.

Caution:

- To avoid permanent damage, do not use a microwave oven to speed up the drying process.

FCC and other information

This equipment complies with Part 68 of the FCC rules and the requirements adopted by the ACTA. On the bottom of this equipment is a label that contains, among other information, a product identifier in the format US:ACJ----------.
If requested, this number must be provided to the telephone company.

- Registration No.....(found on the bottom of the unit)
- Ringer Equivalence No. (REN).....0.1B

A plug and jack used to connect this equipment to the premises wiring and telephone network must comply with the applicable FCC Part 68 rules and requirements adopted by the ACTA. A compliant telephone cord and modular plug is provided with the product. It is designed to be connected to a compatible modular jack that is also compliant.

The REN is used to determine the number of devices that may be connected to a telephone line. Excessive RENs on a telephone line may result in the devices not ringing in response to an incoming call. In most but not all areas, the sum of RENs should not exceed five (5.0). To be certain of the number of devices that may be connected to a line, as determined by the total RENs, contact the local telephone company. For products approved after July 23, 2001, the REN for the product is part of the product identifier that has the format US:AAAEQ##TXXXX. The digits represented by ## are the REN without a decimal point (e.g., 03 is a REN of 0.3).

If this equipment causes harm to the telephone network, the telephone company will notify you in advance that temporary discontinuance of service may be required. But if advance notice isn't practical, the telephone company will notify the customer as soon as possible. Also, you will be advised of your right to file a complaint with the FCC if you believe it is necessary.

The telephone company may make changes in its facilities, equipment, operations or procedures that could affect the operation of the equipment. If this happens the telephone company will provide advance notice in order for you to make necessary modifications to maintain uninterrupted service.

If trouble is experienced with this equipment, for repair or warranty information, please contact a Factory Service Center or other Authorized Servicer. If the equipment is causing harm to the telephone network, the telephone company may request that you disconnect the equipment until the problem is resolved.

Connection to party line service is subject to state tariffs. Contact the state public utility commission, public service commission or corporation commission for information.

If your home has specially wired alarm equipment connected to the telephone line, ensure the installation of this equipment does not disable your alarm equipment. If you have questions about what will disable alarm equipment, consult your telephone company or a qualified installer.

This equipment is hearing aid compatible as defined by the FCC in 47 CFR Section 68.316.

When you hold the phone to your ear, noise might be heard in your Hearing Aid. Some Hearing Aids are not adequately shielded from external RF (radio frequency) energy. If noise occurs, use an optional headset accessory or the speakerphone option (if applicable) when using this phone. Consult with your audiologist or Hearing Aid

manufacturer about the availability of Hearing Aids which provide adequate shielding to RF energy commonly emitted by digital devices.

WHEN PROGRAMMING EMERGENCY NUMBERS AND(OR) MAKING TEST CALLS TO EMERGENCY NUMBERS:
1) Remain on the line and briefly explain to the dispatcher the reason for the call.
2) Perform such activities in the off-peak hours, such as early morning or late evenings.

This device complies with Part 15 of the FCC Rules. Operation is subject to the following two conditions:
(1) This device may not cause harmful interference, and (2) this device must accept any interference received, including interference that may cause undesired operation.
Privacy of communications may not be ensured when using this phone.

CAUTION:
Any changes or modifications not expressly approved by the party responsible for compliance could void the user's authority to operate this device.

NOTE:
This equipment has been tested and found to comply with the limits for a Class B digital device, pursuant to Part 15 of the FCC Rules. These limits are designed to provide reasonable protection against harmful interference in a residential installation. This equipment generates, uses, and can radiate radio frequency energy and, if not installed and used in accordance with the instructions, may cause harmful interference to radio communications. However, there is no guarantee that interference will not occur in a particular installation. If this equipment does cause harmful interference to radio or television reception, which can be determined by turning the equipment off and on, the user is encouraged to try to correct the interference by one or more of the following measures:
– Reorient or relocate the receiving antenna.
– Increase the separation between the equipment and receiver.
– Connect the equipment into an outlet on a circuit different from that to which the receiver is connected.
– Consult the dealer or an experienced radio/TV technician for help.

Some cordless telephones operate at frequencies that may cause interference to nearby TVs and VCRs. To minimize or prevent such interference, the base of the cordless telephone should not be placed near or on top of a TV or VCR. If interference is experienced, move the cordless telephone further away from the TV or VCR. This will often reduce or eliminate interference.

FCC RF Exposure Warning:
- This product complies with FCC radiation exposure limits set forth for an uncontrolled environment.
- To comply with FCC RF exposure requirements, the base unit must be installed and operated 20 cm (8 inches) or more between the product and all person's body.
- This product may not be collocated or operated in conjunction with any other antenna or transmitter.
- The handset may be carried and operated with only the specific provided belt-clip. Other non-tested belt-clips or similar body-worn accessories may not comply and must be avoided.

Notice:
- FCC ID can be found inside the battery compartment or on the bottom of the units.

Compliance with TIA-1083 standard:
Telephone handsets identified with this logo have reduced noise and interference when used with T-Coil equipped hearing aids and cochlear implants.

Charge only mode

The charge only mode is the dedicated mode to charge the backup batteries of the base unit. Do not use this mode if it is unnecessary because all functions except the base unit's battery charge is disabled with this feature on. Leave all the registered handsets on the chargers during use of the charge only mode.

■ **To activate the charge only mode:**

1. Press **【ANSWER ON/OFF】** to turn on the answering system.
   - Make sure the message counter turns on.
2. Disconnect the telephone line cord, the AC adaptor plug, and remove the batteries from the base unit.
3. Press and hold **【►►I】**, **【🔊】**, and **【ERASE】** at the same time, then insert the AC adaptor plug to the base unit. Keep on pressing these keys until a beep tone sounds.
4. Release these keys.
   - The message counter turns off.
5. Insert batteries.
   - The batteries are started to be charged.

Note:

- If the message counter is still on when you release the keys, the base unit is not in the charging only mode. Repeat from step 1.

■ **To deactivate the charge only mode:**

– Press any key.
– 24 hours passed after activating the charge only mode.

Guía Rápida Española

Conexiones

① Conecte el adaptador de corriente alterna a la unidad presionándolo firmemente.
② Enganche el cable para fijarlo.
③ Conecte el adaptador de corriente alterna a la toma de corriente.
④ Conecte el cable de la línea telefónica a la unidad, y después a la toma telefónica de una sola línea (RJ11C) hasta que escuche un clic.
⑤ Se requiere un filtro DSL/ADSL (no incluido) si tiene este tipo de servicio.

Nota:

- El adaptador de CA y el cable de la línea de teléfono vienen conectados a la unidad base en el momento del envío.
- Use solo el adaptador de corriente alterna Panasonic que se suministra.*1

*1 PNLV226: KX-TGM430
PNLV236: KX-TGM460

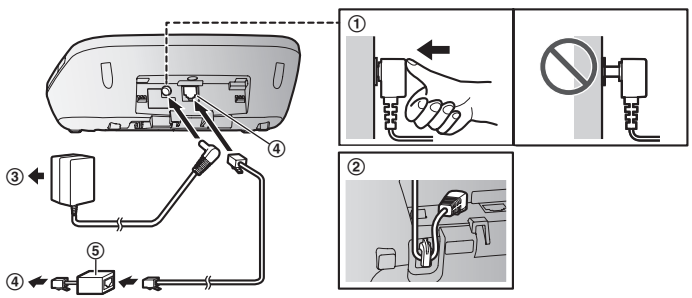

Carga de las baterías

Auricular

Dos (2) baterías Ni-MH recargables están instaladas en el auricular en el momento del envío.
Antes del uso inicial: Quite el precinto amarillo antes de usar el auricular.

Cargue aproximadamente durante 7 horas.

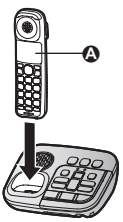

Nota para el auricular:
- UTILICE SOLO baterías recargables de Ni-MH tamaño AAA (R03).
- NO utilice baterías alcalinas, de manganeso ni de Ni-Cd.
- Confirme que las polaridades estén correctas (⊕, ⊖).
- Cambie el idioma de la pantalla.
- Confirme que aparezca "**Cargando**" (Ⓐ).

Unidad base

Dos (2) baterías Ni-MH recargables están instaladas en la unidad base en el momento del envío. Estas baterías pueden utilizarse para suministrar energía a la unidad base en caso de corte de energía.
Antes del uso inicial: Quite el precinto amarillo antes de usar la unidad base.

Cargue aproximadamente durante 15 horas.

Sugerencias de operación

Teclas de función
Al oprimir una tecla de función, puede seleccionar la función que aparece directamente encima de ella en la pantalla. Preste atención a la pantalla para ver qué funciones están asignadas a las teclas de función durante la operación.

Tecla navegadora
- 【▲】, 【▼】, 【◄】 o 【►】: Navegue por diversas listas y elementos.
- VOL. (Volumen: 【▲】 o 【▼】): Ajuste el volumen del receptor o el altavoz mientras habla.
- 【◄】 📖: Vea la entrada del directorio telefónico.
- 【►】 REDIAL (Remarcación): Vea la lista de remarcación.
- 【▼】 CID (Identificador de llamadas): Vea la lista de personas que llamaron.

Tecla de volumen
Oprima 【+】 o 【−】 repetidamente:
- ajustar el volumen del timbre.
- ajustar el volumen del receptor o del altavoz mientras habla.

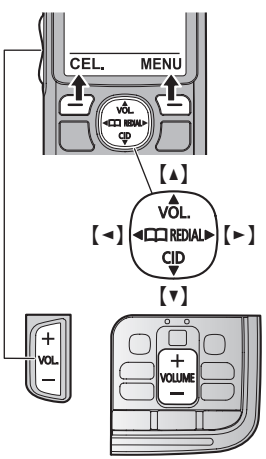

Cambio de idiomas (Auricular) (predeterminado: "English")

Cuando aparece **"Set date/time Press SELECT"**, presione **[OFF]** para salir.

Idioma de la pantalla

[MENU]#110 → **[▲▼]**: "Español" → **[GUARDAR]** → **[OFF]**

Idioma de anuncio de voz

[MENU]#112 → **[▲▼]**: "Español" → **[GUARDAR]** → **[OFF]**

Fecha y hora (Auricular)

1 **[MENU]**#101
2 Introduzca el día, mes y año actuales. → **[OK]**
3 Introduzca la hora y minuto actuales (formato de reloj de 24 horas).
4 **[GUARDAR]** → **[OFF]**

Cómo grabar el mensaje de saludo del contestador de llamadas para la línea terrestre (Auricular)

Puede grabar su propio mensaje de saludo en lugar de usar uno pregrabado.

1 **[MENU]**#302 → **[▲▼]**: "Si" → **[SELEC.]**
2 Después de que se emita un pitido, sostenga el auricular a una distancia aproximada de 20 cm (8 pulgadas) y hable con claridad en el micrófono (máx. de 2 minutos).
3 Oprima **[PARAR]** para dejar de grabar. → **[OFF]**

Accesibilidad

Control del tono (Auricular)

1 Oprima repetidamente **[TONE]** al costado para seleccionar la configuración deseada mientras habla.
2 Para salir, oprima **[ATRAS]** o espere unos segundos.

Control del tono (Unidad base)

1 Mantenga presionado **[TONE]** durante 2 segundos durante la llamada.
2 Oprima repetidamente **[+]** o **[−]** para seleccionar la configuración deseada.
3 Para salir, presione **[TONE]** o espere unos 5 segundos.

Accesibilidad

Activación del amplificador de volumen (Auricular)

⚠ ADVERTENCIA:

- Esta función está diseñada para usuarios con dificultades auditivas. Si otros usuarios utilizan el teléfono, asegúrese de desactivar esta función.
- No use esta función si no es necesario. El volumen alto que emite el producto puede provocar daños auditivos.
- Al presionar la tecla **【BOOST】** se activa la función de amplificación de sonido. Utilice esta tecla con cuidado. En la configuración de volumen más alto (las funciones de volumen y amplificador de volumen configuradas en su nivel máximo), el producto puede emitir sonidos de hasta 40 dB (KX-TGM430) o 50 dB (KX-TGM460). Para evitar daños auditivos, le recomendamos configurar este producto con el volumen mínimo en el cual pueda escuchar adecuadamente.

1 Oprima **【BOOST】** durante una llamada.
- El indicador BOOST enciende una luz roja.

2 Oprima repetidamente **【+】** o **【−】** al costado para seleccionar el volumen deseado.

Aumentador de voz (hace su voz más fuerte) (Auricular)

⚠ ADVERTENCIA:

- La función de amplificación de voz puede utilizarse para subir el volumen de su voz para su interlocutor. Si utiliza esta función innecesariamente, el volumen de su voz puede estar demasiado alto. Le recomendamos que utilice esta función solo si el volumen de su voz es demasiado bajo para el interlocutor.

1 Oprima **【MENU】** durante una llamada.

2 **【▲▼】**: "`Amp. de Trans. Enc.`" o "`Amp. Tr. Apag.`" → **【SELEC.】**

Configuración de teclado y libreta de teléfonos por voz (Auricular/Unidad base)

1 **Para el auricular: 【MENU】#750**
Para la unidad base (usando un auricular): 【MENU】#*750

2 **【▲▼】**: Seleccione la configuración deseada. → **【GUARDAR】** → **【OFF】**

Configuración del indicador de mensajes (Auricular/Unidad base)

1 **Para el auricular: 【MENU】#278**
Para la unidad base (usando un auricular): 【MENU】#*278

2 **【▲▼】**: Seleccione la configuración deseada y oprima **【SELEC.】**.

3 **【GUARDAR】** → **【OFF】**

Conversación lenta (Auricular)

Para activar esta función o cambiar la configuración actual, presione **【SLOW】**.

Conversación lenta (Unidad base)

Para activar esta función o cambiar la configuración actual, presione **【SLOW TALK】**.

Enlace a celular

Puede conectar su unidad base y teléfono celular usando la tecnología inalámbrica Bluetooth®, para poder hacer o responder llamadas a su teléfono celular usando su sistema telefónico. Para obtener más detalles, visite nuestro sitio web: http://shop.panasonic.com/bluetooth-phone

- Coloque su teléfono celular cerca de la unidad base. Si su teléfono celular está demasiado cerca de la unidad base durante la llamada celular, es posible que escuche ruido. Para un mejor funcionamiento, le recomendamos que coloque su teléfono celular de 0.6 m a 3 m (2 pies a 10 pies) de la unidad base.

Ⓐ Línea celular
Ⓑ Proveedores de servicios de telefonía celular

Cómo emparejar un teléfono celular con Bluetooth

1 Unidad base:
Oprima y mantenga oprimido 【**CELL 1**】 o 【**CELL 2**】 durante aproximadamente 5 segundos.
- Después de que el indicador de CELL correspondiente comienza a parpadear en la unidad base, el resto del procedimiento debe completarse en menos de 5 minutos.

2 Su teléfono celular:
Mientras el indicador de CELL correspondiente esté parpadeando, siga las instrucciones de su teléfono celular para entrar al modo de emparejamiento.
- Dependiendo de su teléfono celular, es posible que le pida que introduzca el NIP de Bluetooth (predeterminado: "0000").
- Si el teléfono celular le solicita que confirme la clave, oprima 【**OK**】 o acepte la solicitud de enlace.

3 Unidad base:
Espere a que se emita un pitido largo.
- Es posible que tarde más de 10 segundos en completar el emparejamiento.
- Cuando el indicador de CELL correspondiente se ilumina, esto significa que el teléfono celular está conectado a la unidad base. Ya está listo para hacer llamadas regulares de celular.

Nota:
- Asegúrese de que su teléfono celular está configurado para conectarse a este producto automáticamente. Consulte las instrucciones de operación de su teléfono celular.

Marcas registradas
- La marca denominativa y los logotipos de Bluetooth® son marcas registradas de Bluetooth SIG, Inc. y cualquier uso de dichas marcas por parte de Panasonic Corporation se hace bajo licencia.
- Todas las demás marcas comerciales que se identifican en el presente pertenecen a sus respectivos propietarios.

Enlace a celular

Unidad base: Indicadores de CELL	
Estado	**Significado**
Encendido	Un teléfono celular está conectado. Listo para hacer o recibir llamadas celulares.
Parpadeando	– La línea del celular se está usando. – Las entradas del directorio telefónico se están copiando desde un teléfono celular. – La unidad base está buscando el teléfono celular emparejado. – La unidad base está emparejando un teléfono celular. – Una llamada de celular se pone en espera.
Parpadea rápidamente	Se está recibiendo una llamada de celular.
Luz apagada	– No hay un teléfono celular emparejado con la unidad base. – No hay un teléfono celular conectado a la unidad base.

Auricular: enlace a elementos de la pantalla del celular	
1 2	Se está usando una línea de celular.*1 ● Cuando parpadea: la llamada celular se pone en espera. ● Cuando parpadea rápidamente: se está recibiendo una llamada celular. *1 Las líneas correspondientes (1, 2: línea del celular) se indican junto al elemento.
1 2H	1, 2: Hay un teléfono celular conectado.*1 Listo para realizar y recibir llamadas de celular. H: El audífono Bluetooth está conectado.*1 Listo para realizar y recibir llamadas de teléfono fijo con su audífono. ● Cuando no aparezca 1, 2, ni H: No hay un teléfono celular (1, 2) ni un audífono Bluetooth (H) conectado a la unidad base. *1 Las líneas correspondientes (1, 2: línea de celular, H: audífono Bluetooth) se indican junto al elemento.
C1 C2	– Se está haciendo una llamada de celular en esa línea. – La línea celular está seleccionada para la configuración.

Enlace a celular

Cómo conectar o desconectar el teléfono celular (Auricular)

Conexión automática a los dispositivos con Bluetooth (teléfonos celulares)
La unidad se conecta a los dispositivos Bluetooth a intervalos regulares si se pierde la conexión. Consulte las instrucciones de operación para cambiar el intervalo (predeterminado: "`1 min`").

- Cuando se sincronizan 3 dispositivos con capacidad Bluetooth (2 teléfonos celulares y 1 auricular) a la unidad base, sólo 2 dispositivos Bluetooth pueden usarse con la unidad a la vez, y la unidad base pierde su conexión con otros dispositivos Bluetooth. Para restablecer la conexión a los dispositivos Bluetooth automáticamente, deje encendida la conexión automática.

Cómo conectar o desconectar manualmente el teléfono celular
Si no va a utilizar el vínculo del teléfono celular emparejado a la función del celular temporalmente (por ejemplo, si no quiere que la unidad timbre cuando su línea celular reciba una llamada), puede desconectar su teléfono celular de la unidad base. Si desea usarlo de nuevo, reconecte el teléfono celular a la unidad base.

- Después de desconectar un teléfono celular emparejado de la unidad base manualmente, se conectará automáticamente a la misma en 30 minutos. Si ya no usa la función de enlace al celular, deshaga el emparejamiento del celular.
- Los teléfonos celulares desconectados no se desemparejan de la unidad base, así que no es necesario emparejarlos de nuevo con ella.

1 **Para conectarlo o desconectarlo:**
Para CELL 1: **【MENU】**#6251
Para CELL 2: **【MENU】**#6252
- Se emite un pitido largo.

2 **【OFF】**

Modo exclusivo para la línea celular (si no utiliza la línea terrestre) (Auricular)

Si no utiliza la línea terrestre, recomendamos configurar la unidad en el modo exclusivo para la línea celular. La configuración predeterminada es "`Apagado`".

- Si enciende el "`Modo Lín. Cel.`", desconecte el cable de la línea telefónica de la unidad base. De lo contrario, no es posible activar el "`Modo Lín. Cel.`".

1 **【MENU】**#157

2 **Para encenderlo:**
【▲▼】: "`Encendido`" → **【SELEC.】** → **【▲▼】**: "`Sí`" → **【SELEC.】**
Para apagarlo:
【▲▼】: "`Apagado`" → **【SELEC.】**

Operaciones básicas

Cómo hacer y contestar llamadas (Auricular)	
Para hacer llamadas de celular	**1** Marque el número telefónico. → **【CEL.】** ● Cuando el modo exclusivo para la línea celular está configurado, también puede oprimir **【TALK】**/**【🔊】** en lugar de **【CEL.】**. ● Cuando solo hay 1 teléfono celular emparejado, la unidad comienza a marcar. **2** Cuando hay 2 teléfonos celulares emparejados: **【▲▼】**: Seleccione el teléfono celular deseado. → **【SELEC.】**
Para hacer llamadas por la línea terrestre	Marque el número telefónico. → **【TALK】**/**【🔊】**
Para contestar llamadas	**【TALK】**/**【🔊】**
Para colgar	**【OFF】**
Para ajustar el volumen del receptor o del altavoz	Oprima repetidamente **【+】** o **【−】** al costado durante la llamada.
Cómo hacer una llamada usando la lista de remarcación	**1** **【►】** REDIAL → **【▲▼】**: Seleccione la entrada deseada. **2** **Para hacer una llamada celular:** Cuando solo 1 teléfono celular está emparejado: **【CEL.】** o Cuando 2 teléfonos celulares están emparejados: **【CEL.】** → **【▲▼】**: Seleccione el teléfono celular deseado. → **【SELEC.】** **Para hacer una llamada terrestre:** **【TALK】**
Para ajustar el volumen del timbre (línea de celular/línea terrestre)	Oprima repetidamente **【+】** o **【−】** al costado para seleccionar el volumen deseado mientras suena el tono.
Para contestar llamadas (Unidad base)	
Para contestar llamadas	**【🔊】**
Para colgar	**【🔊】**
Para ajustar el volumen del altavoz	Oprima **【+】** o **【−】** repetidamente mientras habla.
Para ajustar el volumen del timbre (línea de celular/línea terrestre)	Oprima **【+】** o **【−】** repetidamente para seleccionar el volumen deseado mientras timbra.

Operaciones básicas

Directorio telefónico (Auricular)	
Para añadir entradas	**1** 【◄】📖 → 【MENU】 **2** 【▲▼】: "Agregar Ent. Nueva" → 【SELEC.】 **3** Introduzca el nombre de la persona (máx. 16 caracteres). → 【OK】 **4** Introduzca el número telefónico de la persona (máx. 24 dígitos). → 【OK】 **5** 【▲▼】: Seleccione el grupo deseado. → 【SELEC.】 2 veces → 【OFF】 ● En el paso 3, puede cambiar el idioma de introducción de caracteres. # → 【▲▼】: Seleccione el idioma deseado. → 【OK】
Para hacer llamadas	**1** 【◄】📖 → 【▲▼】: Seleccione la entrada deseada. **2** **Para hacer una llamada celular:** Cuando solo 1 teléfono celular está emparejado: 【CEL.】 o Cuando 2 teléfonos celulares están emparejados: 【CEL.】 → 【▲▼】: Seleccione el teléfono celular deseado. → 【SELEC.】 **Para hacer una llamada terrestre:** 【TALK】
Memoria de marcaje (Unidad base)	
Añadir números de teléfono usando un auricular	**1** Mantenga pulsada la tecla de memoria que desee (1 a 3) en el auricular. → 【AÑADIR】 **2** 【▲▼】: "Manual" → 【SELEC.】 ● Si selecciona "Directorio", puede agregar números de teléfono del directorio. En este caso, siga las instrucciones en pantalla. **3** Introduzca el nombre de la persona (máx. 16 caracteres). → 【OK】 **4** Introduzca el número telefónico de la persona (máx. 24 dígitos). → 【OK】 → 【SELEC.】 → 【OFF】 ● El número de teléfono se asigna a la tecla correspondiente de la memoria en el auricular (1, 2, o 3) y unidad base (【M1】, 【M2】, o 【M3】).
Para hacer llamadas	**Para hacer una llamada celular:** **1** Oprima 【CELL 1】 o 【CELL 2】. **2** Oprima la tecla de marcación de memoria deseada (【M1】 a 【M3】). **Para hacer una llamada terrestre:** Mantenga pulsada la tecla de memoria que desee (【M1】 a 【M3】) en la unidad base.

Operaciones básicas

Contestador de llamadas de la línea terrestre (Unidad base)	
Contestador encendido/ apagado	Oprima **【ANSWER ON/OFF】** para encender y apagar el contestador de llamadas.
Para escuchar mensajes	**【▶■】** (PLAY)

Contestador de llamadas de la línea terrestre (Auricular)	
Para escuchar mensajes	**Para escuchar mensajes nuevos:** **【REPROD.】** o **【MENU】#3 2 3** **Para escuchar todos los mensajes:** **【MENU】#3 2 4**

Cómo usar dispositivos Bluetooth

Copiado de entradas del directorio telefónico desde un teléfono celular con Bluetooth (transferencia del directorio telefónico)

Puede copiar entradas del directorio telefónico desde los teléfonos celulares emparejados o desde otros teléfonos celulares (no emparejados) al directorio telefónico de la unidad.

1 Auricular: 【MENU】#6 1 8

2 Auricular:

Para copiar desde teléfonos celulares emparejados:

【▲▼】: Seleccione el teléfono celular deseado. → **【SELEC.】**

- Los elementos copiados se almacenan en el grupo (“`Cel. 1`” o “`Cel. 2`”) en el que está emparejado el teléfono celular.

Para copiar desde otros teléfonos celulares (no emparejados):

【▲▼】: “`Otro celular`” → **【SELEC.】** → **【▲▼】**: Seleccione el grupo al que desea copiar. → **【SELEC.】**

3 Auricular:

Cuando aparezca “`Transf. datos del directorio del celular`”: Vaya al paso 4.

Cuando aparezca el menú “`Selec. modo`”:

【▲▼】: Seleccione “`Auto`” o “`Manual`”. → **【SELEC.】**

“`Auto`”: Descargue todas las entradas del teléfono celular automáticamente. Vaya al paso 5.

“`Manual`”: Copie las entradas que seleccionó.

- El menú “`Selec. modo`” aparece solo cuando el teléfono celular soporta PBAP (Perfil de Acceso a Directorio Telefónico) para la conexión Bluetooth.

4 Teléfono celular:

Siga las instrucciones de su teléfono celular para copiar las entradas del directorio telefónico.

- Para otros teléfonos celulares (no emparejados), necesita buscar y seleccionar la unidad base. Quizás requiera el NIP de Bluetooth (predeterminado: “`0000`”).
- Si el teléfono celular le solicita que confirme la clave, oprima **【OK】** o acepte la solicitud de enlace.
- Las entradas que se están copiando aparecen en el auricular.

5 Auricular:

Espere a que aparezca “`Completo`”. → **【OFF】**

Cómo usar dispositivos Bluetooth

Cómo usar un audífono Bluetooth (opcional)

Al emparejar un audífono Bluetooth con la unidad base, podrá tener conversaciones a manos libres para llamadas terrestres.

- Solo se pueden usar 2 dispositivos Bluetooth con la unidad al mismo tiempo (por ejemplo, 2 líneas celulares o el audífono y 1 línea celular[*1]).

*1 No es posible usar un audífono Bluetooth para hablar en una línea celular.

Cómo emparejar un audífono Bluetooth con la unidad base

1 Audífono Bluetooth:
Configure su audífono en modo de emparejamiento.
- Consulte las instrucciones de operación de su audífono.

2 Auricular:
【MENU】#6 2 1

Ⓐ Empareje usando el auricular.
Ⓑ Emparejamiento

3 Si el PIN de su audífono es "0000", vaya al paso 4.
Si el PIN de su audífono no es "0000", oprima **【BORRAR】** y, a continuación, escriba el PIN de su audífono.
- Por lo general, el PIN predeterminado es **"0000"**. Consulte las instrucciones de operación del audífono.

4 Oprima **【OK】**, y después espere a que se emita un pitido largo. → **【OFF】**
- Cuando el audífono Bluetooth esté listo para utilizar:
  - ✱H aparece en el auricular (H: audífono Bluetooth),
  - Se enciende el indicador CELL 2/HEADSET en la unidad base.

Cómo operar un audífono con Bluetooth usando una línea terrestre (Unidad base)
Para obtener detalles, consulte las instrucciones de operación de su audífono.

■ **Cómo realizar llamadas de la línea terrestre con su audífono**

1 Oprima el botón del audífono que le permite ver las instrucciones operativas del audífono.
2 Oprima la tecla de marcación de memoria deseada (**【M1】** a **【M3】**).
3 Cuando termine de hablar, oprima el botón del audífono (consulte las instrucciones de operación de su audífono).
- Si no puede colgar la llamada usando su audífono, oprima **【🔊】** 2 veces en la unidad base.

■ **Cómo contestar llamadas de la línea terrestre con su audífono**
Para contestar una llamada de línea terrestre, oprima el botón del audífono (consulte las instrucciones de operación de su audífono).
Cuando termine de hablar, oprima el botón del audífono (consulte las instrucciones de operación de su audífono).

■ **Cómo cambiar entre la unidad base y su audífono**
Puede cambiar entre la unidad base y su audífono:
- durante una llamada por una línea terrestre con el altavoz de la unidad base.
- durante una llamada de intercomunicador entre la unidad base y el auricular.
- mientras escucha los mensajes grabados en el contestador de llamadas de la unidad base.

Para cambiar a su audífono:
Encienda el audífono. Para ello, consulte las instrucciones de operación de su audífono.
Para cambiar a la unidad base:
Oprima **【🔊】** en la unidad base.

Preguntas frecuentes

Pregunta	Causa y solución
¿Por qué aparece ▼?	● El auricular está demasiado lejos de la unidad base. Acérquelo. ● El adaptador para corriente de la unidad base no está conectado correctamente. Conecte de nuevo el adaptador para corriente a la unidad base. ● El auricular no está registrado en la unidad base. Regístrelo. **1** **Auricular:** 【MENU】#130 **2** **Unidad base:** Oprima y mantenga oprimido 【**LOCATOR/INTERCOM**】 durante aproximadamente 5 segundos. **3** **Auricular:** Oprima 【**OK**】, y después espere hasta que suene un pitido largo.
¿Por qué no es posible emparejar un teléfono celular con la unidad base?	● Dependiendo de la compatibilidad del teléfono celular, es posible que no pueda emparejarlo con la unidad base. Para obtener más información, visite: http://shop.panasonic.com/bluetooth-phone ● Confirme que la función de Bluetooth de su teléfono celular esté encendida. Es posible que necesite encender esta función dependiendo de su teléfono celular.
¿Por qué no se escucha el tono de marcación? (línea celular)	● Asegúrese de que se encienda el indicador CELL en la unidad base y que aparezca ✱ en el auricular. ● El teléfono celular no se ha emparejado con la unidad base. Empareje el teléfono celular.
¿Cómo se incrementa el nivel de volumen del auricular?	● Presione repetidamente la tecla de volumen 【+】 en el lateral del auricular durante una llamada. ● Si el indicador BOOST no está encendido, active el aumentador de volumen presionando 【**BOOST**】 durante una llamada. Tenga en cuenta que el volumen subirá drásticamente.
¿Cómo se disminuye el nivel de volumen del auricular?	● Presione repetidamente la tecla de volumen 【−】 en el lateral del auricular durante una llamada. ● Si el indicador BOOST está encendido, desactive el aumentador de volumen presionando 【**BOOST**】 durante una llamada.
¿Por qué hay ruido o se corta la conversación?	● Trate de reubicar la unidad base de forma que se minimice la distancia al auricular. ● Si ocurre el mismo problema aunque el auricular se encuentre enseguida de la unidad base, visite: http://shop.panasonic.com/support
¿Es posible añadir otro auricular accesorio a mi unidad base?	● Sí, puede añadir hasta 6 auriculares (incluyendo los que se venden con su unidad base) a una sola unidad base. ● Para adquirir auriculares accesorios adicionales*1, visite: http://shop.panasonic.com/support Los usuarios TTY (usuarios con impedimentos auditivos o del habla) pueden llamar al 1-877-833-8855. *1 KX-TGMA44: El volumen máximo del receptor es de 40 dB. KX-TGMA45: El volumen máximo del receptor es de 50 dB.

Preguntas frecuentes

Pregunta	Causa y solución
¿Es posible mantener cargando las baterías todo el tiempo?	● Puede dejar el auricular en la unidad base o el cargador en cualquier momento. Esto no daña las baterías.
¿Cómo se contestan las llamadas en espera (2a llamada)?	● Oprima **【FLASH】** en el auricular o **【FLASH/CALL WAIT】** en la unidad base cuando escuche el tono de llamada en espera.

Customer services

Shop Accessories!

for all your Panasonic gear

Go to

http://shop.panasonic.com/support

Get everything you need to get the most out of your Panasonic products
Accessories & Parts for your Camera, Phone, A/V products, TV, Computers & Networking, Personal Care, Home Appliances, Headphones, Batteries, Backup Chargers & more…

Customer Services Directory

For Product Information, Operating Assistance, Parts, Owner's Manuals, Dealer and Service info go to http://shop.panasonic.com/support

For the hearing or speech impaired TTY: 1- 877-833-8855

As of June 2015

Limited Warranty (ONLY FOR U.S.A.)

Panasonic Products Limited Warranty

Limited Warranty Coverage (For USA Only)

If your product does not work properly because of a defect in materials or workmanship, Panasonic Corporation of North America (referred to as “the warrantor”) will, for the length of the period indicated on the chart below, which starts with the date of original purchase (“warranty period”), at its option either (a) repair your product with new or refurbished parts, (b) replace it with a new or a refurbished equivalent value product, or (c) refund your purchase price. The decision to repair, replace or refund will be made by the warrantor.

Product or Part Name	Parts	Labor
Telephone	One (1) Year	One (1) Year

During the “Labor” warranty period there will be no charge for labor. During the “Parts” warranty period, there will be no charge for parts. This Limited Warranty excludes both parts and labor for non-rechargeable batteries, antennas, and cosmetic parts (cabinet). This warranty only applies to products purchased and serviced in the United States. This warranty is extended only to the original purchaser of a new product which was not sold “as is”.

Mail-In Service--Online Repair Request

Online Repair Request

To submit a new repair request and for quick repair status visit our Web Site at http://shop.panasonic.com/support

When shipping the unit, carefully pack, include all supplied accessories listed in the Owner’s Manual, and send it prepaid, adequately insured and packed well in a carton box. When shipping Lithium Ion batteries please visit our Web Site at http://shop.panasonic.com/support as Panasonic is committed to providing the most up to date information. Include a letter detailing the complaint, a return address and provide a daytime phone number where you can be reached. A valid registered receipt is required under the Limited Warranty.

IF REPAIR IS NEEDED DURING THE WARRANTY PERIOD, THE PURCHASER WILL BE REQUIRED TO FURNISH A SALES RECEIPT/PROOF OF PURCHASE INDICATING DATE OF PURCHASE, AMOUNT PAID AND PLACE OF PURCHASE. CUSTOMER WILL BE CHARGED FOR THE REPAIR OF ANY UNIT RECEIVED WITHOUT SUCH PROOF OF PURCHASE.

Limited Warranty Limits and Exclusions

This warranty ONLY COVERS failures due to defects in materials or workmanship, and DOES NOT COVER normal wear and tear or cosmetic damage. The warranty ALSO DOES NOT COVER damages which occurred in shipment, or failures which are caused by products not supplied by the warrantor, or failures which result from accidents, misuse, abuse, neglect, mishandling, misapplication, alteration, faulty installation, set-up adjustments, misadjustment of consumer controls, improper maintenance, power line surge, lightning damage, modification, introduction of sand, humidity or liquids, commercial use such as hotel, office, restaurant, or other business or rental use of the product, or service by anyone other than a Factory Service Center or other Authorized Servicer, or damage that is attributable to acts of God.

THERE ARE NO EXPRESS WARRANTIES EXCEPT AS LISTED UNDER "LIMITED WARRANTY COVERAGE".

THE WARRANTOR IS NOT LIABLE FOR INCIDENTAL OR CONSEQUENTIAL DAMAGES RESULTING FROM THE USE OF THIS PRODUCT, OR ARISING OUT OF ANY BREACH OF THIS WARRANTY.

(As examples, this excludes damages for lost time, travel to and from the servicer, loss of or damage to media or images, data or other memory or recorded content. The items listed are not exclusive, but for illustration only.)

ALL EXPRESS AND IMPLIED WARRANTIES, INCLUDING THE WARRANTY OF MERCHANTABILITY, ARE LIMITED TO THE PERIOD OF THE LIMITED WARRANTY.

Some states do not allow the exclusion or limitation of incidental or consequential damages, or limitations on how long an implied warranty lasts, so the exclusions may not apply to you. This warranty gives you specific legal rights and you may also have other rights which vary from state to state. If a problem with this product develops during or after the warranty period, you may contact your dealer or Service Center. If the problem is not handled to your satisfaction, then write to:

Consumer Affairs Department
Panasonic Corporation of North America
661 Independence Pkwy
Chesapeake, VA 23320

PARTS AND SERVICE, WHICH ARE NOT COVERED BY THIS LIMITED WARRANTY, ARE YOUR RESPONSIBILITY.

As of June 2015

Index

3-way conference: *43*

A Accessibility
- Auto boost: *28*
- Booster (speech): *29*
- Booster (volume): *27*
- Headset type: *33*
- Message indicator: *31*
- Neckloop: *32*
- Talking dial: *29*
- Tone control: *26*

Additional handset: *64*
Alarm: *62*
Answering calls: *40*
Answering system
- Call screening: *78*
- Erasing messages: *74*, *75*, *78*
- Greeting message: *73*
- Greeting only: *79*
- Listening to messages: *74*, *77*
- New message alerting: *76*
- Number of rings: *78*
- Recording time: *79*
- Remote access code: *77*
- Remote operation: *77*
- Ring count: *78*
- Toll saver: *78*
- Turning on/off: *73*

Auto talk: *40*, *60*

B Battery: *15*, *17*
Bluetooth wireless technology
- Bluetooth headset: *71*
- Cellular phone (Link to cell): *35*
- Phonebook transfer: *68*

C Call block: *46*
- One ring for blocked call: *47*

Call share: *42*, *61*
Call waiting: *42*
Call Waiting Caller ID: *42*
Caller ID number auto edit: *60*, *66*
Caller ID service: *65*
Caller list: *65*
Caller list edit: *66*
Cellular calls: *39*
Cellular phone
- Pairing: *35*
- Unpairing: *35*

Chain dial: *51*
CID (Caller ID): *65*, *66*
Conference calls: *43*
Control type: *19*
Customer support: *61*

D Date and time: *24*
Dialing mode: *25*
Direct command code: *53*
Display
- Contrast: *59*
- Language: *23*

E Eco mode: *17*
Error messages: *83*

F Flash: *42*, *60*

G Groups: *50*

H Handset
- Deregistration: *64*
- Name: *63*
- Registration: *64*

Hold: *41*

I Intercom: *44*

K Key detector: *59*, *61*
Key tone: *58*

L Landline calls: *40*
Line mode: *60*
Link to cell
- Alert settings for your DECT phone: *70*
- Area code: *38*
- Auto connection: *36*
- Cellular line only mode: *37*
- Cellular line selection: *38*
- Connection: *37*
- Link to Cell app: *69*
- Ring as cell mode: *36*
- Select unit to ring: *36*
- Text message (SMS: Short Message Service) alert: *70*

M Making calls: *40*
Memory dial: *51*
Missed calls: *65*
Mute: *41*

N Noise reduction: *42*

P Pause: *40*
Phonebook: *49*
PIN: *38*
Power failure (power backup operation): *15*

R Redialing: *39*, *40*
Ringer ID: *50*
Ringer tone
- Intercom call (Base unit): *57*

Intercom call (Handset): *57*
Outside call (Base unit): *55*, *57*
Outside call (Handset): *55*, *57*
Rotary/pulse service: *42*

S Silent mode: *63*
Sound enhancer: *42*
SP-PHONE (Speakerphone): *40*

T Talking Caller ID: *65*
Temporary tone dialing: *42*
Time adjustment: *58*
Transferring calls: *43*
Troubleshooting: *84*
TTY: *109*

V VM (Voicemail): *80*
Voice announcement language: *23*
Voice paging: *45*
Voicemail: *80*
Volume
Receiver: *39*
Ringer for intercom call (Base unit): *41*, *57*
Ringer for intercom call (Handset): *41*, *57*
Ringer for outside call (Base unit): *41*, *55*, *57*
Ringer for outside call (Handset): *41*, *55*, *57*
Speaker: *39*

W Wall mounting: *81*

IMPORTANT!

If your product is not working properly. . .

① **Disconnect AC adaptor and remove batteries from base unit.**
② **Reconnect AC adaptor and reinsert batteries into base unit.**
③ **Check if telephone line cord is connected.**
④ **Use rechargeable Ni-MH batteries.**
(Alkaline/Manganese/Ni-Cd batteries CANNOT be used.)
⑤ Read **troubleshooting** page in the **Operating Instructions.**

Visit our Web site: http://shop.panasonic.com/support
- **FAQ and troubleshooting hints are available.**

For your future reference

We recommend keeping a record of the following information to assist with any repair under warranty.

Serial No.	Date of purchase
(found on the bottom of the base unit)	
Name and address of dealer	

Attach your purchase receipt here.

Panasonic Corporation of North America
Two Riverfront Plaza, Newark, NJ 07102-5490

© Panasonic Corporation 2016

Printed in Malaysia

PNQX7805XA

PNQX7805XA TT0416YK2010