DAkkS
Deutsche
Akkreditierungsstelle
D-PL-12139-01-00

The Testcenter facility 'Dosimetric Test Lab' within IMST GmbH is accredited by the German National 'Deutsche Akkreditierungsstelle GmbH (DAkkS)' for testing according to the scope as listed in the accreditation certificate: D-PL-12139-01-00.

Appendix for the SAR Test Report

Dosimetric Assessment of the Portable Device KX-TGMA45 from Panasonic

(FCC ID: ACJ96NKX-TGMA45)

According to the FCC Requirements SAR Distribution Plots

March 16, 2016

IMST GmbH

Carl-Friedrich-Gauß-Str. 2 - 4

47475 Kamp-Lintfort

Germany

Customer

Panasonic System Networks Co., Ltd.

1 - 62, 4 - chome Minoshima, Hakata,

Fukuoka 812-8531

Japan

The test results only relate to the items tested.

This report shall not be reproduced except in full without the written approval of the testing laboratory.

SAR Distribution Plots for Head and Body Worn Configuration

Test Laboratory: IMST GmbH, DASY Blue (I); File Name: TGMA45_b_dect_lm_1.da4

DUT: Panasonic; Type: KX-TGMA45; Serial: 6160093_000001
Program Name: DECT

Communication System: DECT US; Frequency: 1924.99 MHz;Duty Cycle: 1:24
Medium parameters used: f = 1924.99 MHz; σ = 1.44 mho/m; ε_r = 40.2; ρ = 1000 kg/m^3
Phantom section: Left Section

DASY4 Configuration:
- Probe: ET3DV6R - SN1669; ConvF(4.97, 4.97, 4.97); Calibrated: 19.02.2015
- Sensor-Surface: 4mm (Mechanical Surface Detection)
- Electronics: DAE3 Sn335; Calibrated: 16.02.2016
- Phantom: SAM Glycol 1176; Type: Speag; Serial: 1176
- Measurement SW: DASY4, V4.7 Build 80; Postprocessing SW: SEMCAD, V1.8 Build 186

Tilted Left/Area Scan (7x13x1): Measurement grid: dx=15mm, dy=15mm
Maximum value of SAR (measured) = 0.016 mW/g
Tilted Left/Zoom Scan (7x7x7)/Cube 0: Measurement grid: dx=5mm, dy=5mm, dz=5mm
Reference Value = 2.16 V/m; Power Drift = -0.031 dB
Peak SAR (extrapolated) = 0.025 W/kg
SAR(1 g) = 0.016 mW/g; SAR(10 g) = 0.00997 mW/g
Maximum value of SAR (measured) = 0.018 mW/g

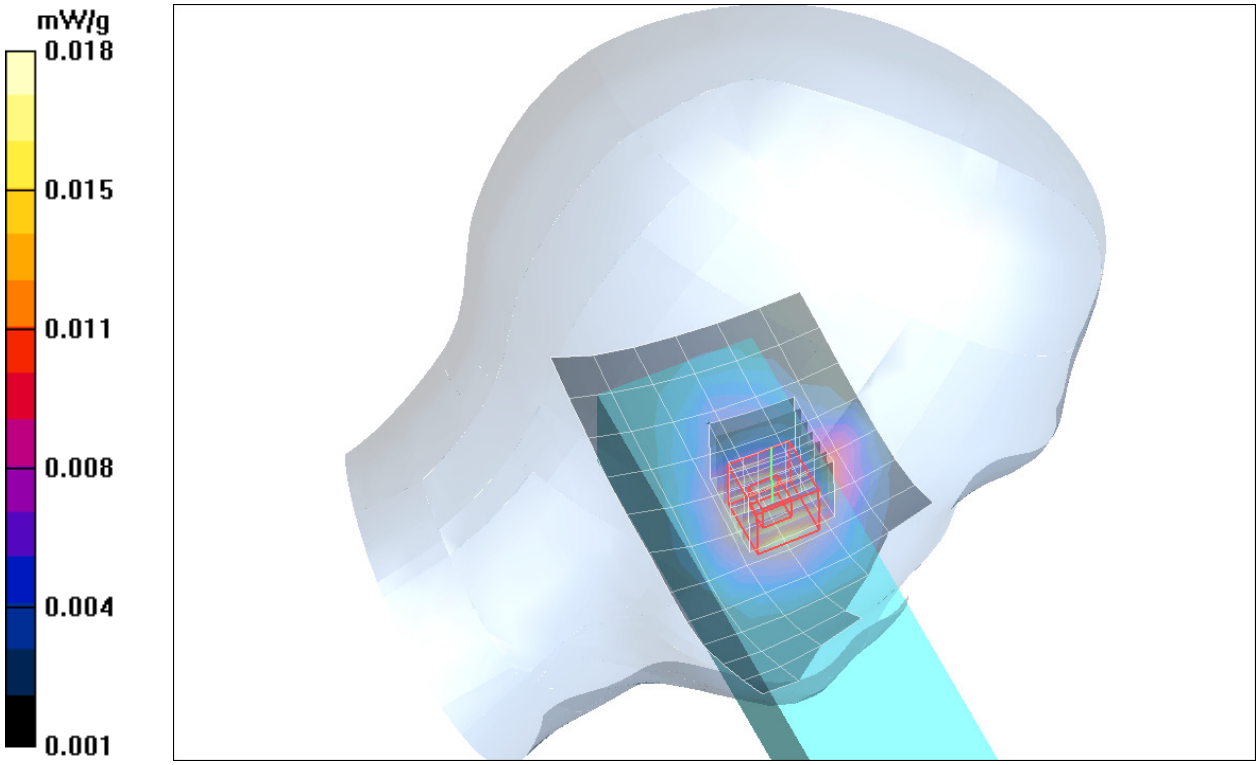

Fig. 1: SAR distribution for DECT US, channel 2, antenna 1, cheek position, left side of head (February 29, 2016)

Test Laboratory: IMST GmbH, DASY Blue (I); File Name: TGMA45_b_dect_lm_2.da4

DUT: Panasonic; Type: KX-TGMA45; Serial: 6160093_000001
Program Name: DECT

Communication System: DECT US; Frequency: 1924.99 MHz;Duty Cycle: 1:24
Medium parameters used: f = 1924.99 MHz; σ = 1.44 mho/m; ε_r = 40.2; ρ = 1000 kg/m^3
Phantom section: Left Section

DASY4 Configuration:
- Probe: ET3DV6R - SN1669; ConvF(4.97, 4.97, 4.97); Calibrated: 19.02.2015
- Sensor-Surface: 4mm (Mechanical Surface Detection)
- Electronics: DAE3 Sn335; Calibrated: 16.02.2016
- Phantom: SAM Glycol 1176; Type: Speag; Serial: 1176
- Measurement SW: DASY4, V4.7 Build 80; Postprocessing SW: SEMCAD, V1.8 Build 186

Tilted Left/Area Scan (7x13x1): Measurement grid: dx=15mm, dy=15mm
Maximum value of SAR (measured) = 0.007 mW/g
Tilted Left/Zoom Scan (7x7x7)/Cube 0: Measurement grid: dx=5mm, dy=5mm, dz=5mm
Reference Value = 2.26 V/m; Power Drift = 0.137 dB
Peak SAR (extrapolated) = 0.010 W/kg
SAR(1 g) = 0.00691 mW/g; SAR(10 g) = 0.00446 mW/g
Maximum value of SAR (measured) = 0.008 mW/g

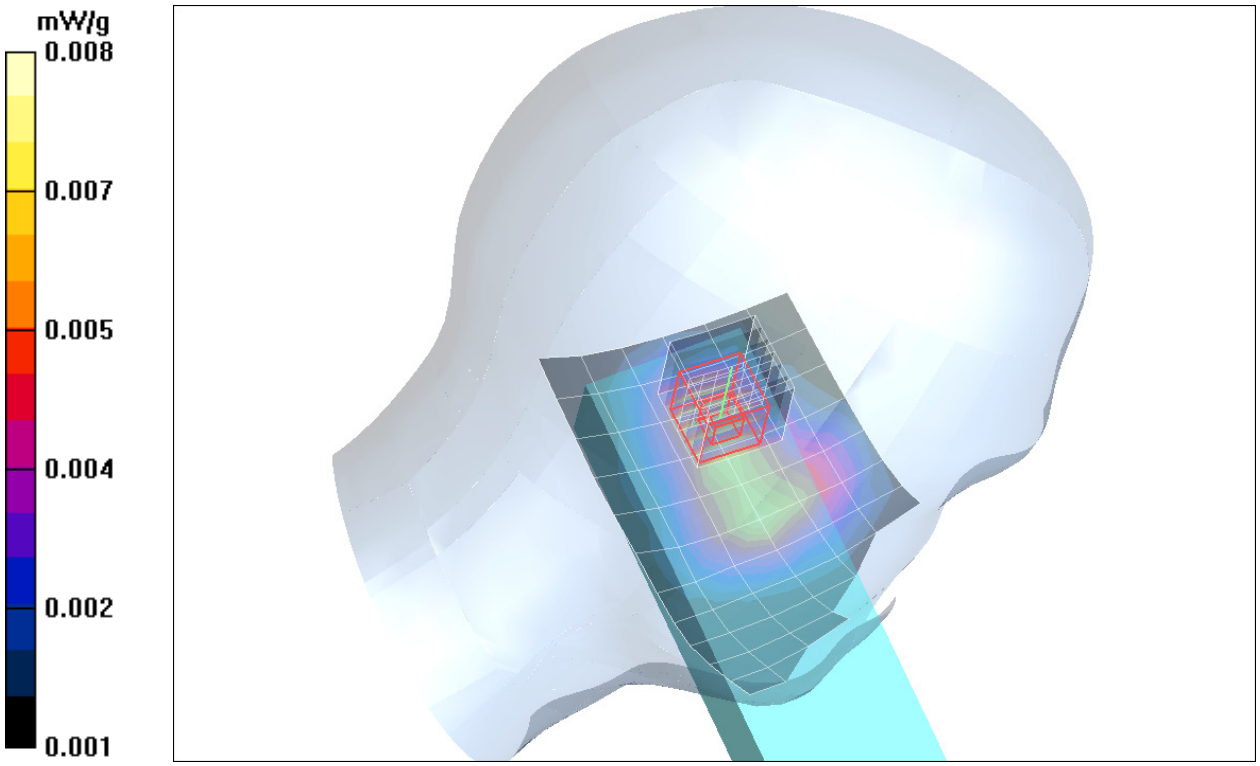

Fig. 2: SAR distribution for DECT US, channel 2, antenna 1, tilted position, left side of head (February 29, 2016)

Test Laboratory: IMST GmbH, DASY Blue (I); File Name: TGMA45_b_dect_rm_1.da4

DUT: Panasonic; Type: KX-TGMA45; Serial: 6160093_000001
Program Name: DECT

Communication System: DECT US; Frequency: 1924.99 MHz;Duty Cycle: 1:24
Medium parameters used: f = 1924.99 MHz; σ = 1.44 mho/m; ε_r = 40.2; ρ = 1000 kg/m^3
Phantom section: Right Section

DASY4 Configuration:
- Probe: ET3DV6R - SN1669; ConvF(4.97, 4.97, 4.97); Calibrated: 19.02.2015
- Sensor-Surface: 4mm (Mechanical Surface Detection)
- Electronics: DAE3 Sn335; Calibrated: 16.02.2016
- Phantom: SAM Glycol 1176; Type: Speag; Serial: 1176
- Measurement SW: DASY4, V4.7 Build 80; Postprocessing SW: SEMCAD, V1.8 Build 186

Cheek Right/Area Scan (7x14x1): Measurement grid: dx=15mm, dy=15mm
Maximum value of SAR (measured) = 0.014 mW/g
Cheek Right/Zoom Scan (7x7x7)/Cube 0: Measurement grid: dx=5mm, dy=5mm, dz=5mm
Reference Value = 2.43 V/m; Power Drift = 0.184 dB
Peak SAR (extrapolated) = 0.020 W/kg
SAR(1 g) = 0.013 mW/g; SAR(10 g) = 0.00837 mW/g

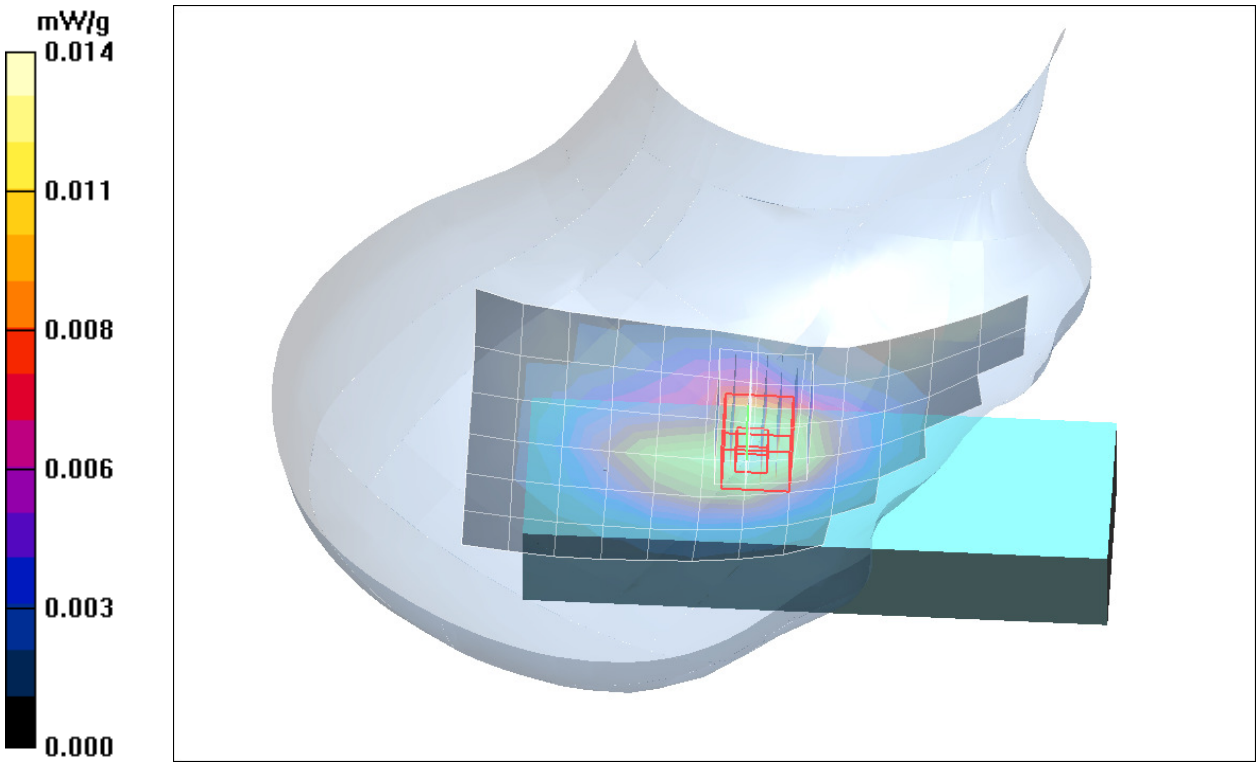

Fig. 3: SAR distribution for DECT US, channel 2, *antenna 1,* cheek position, right side of head (February 29, 2016)

Test Laboratory: IMST GmbH, DASY Blue (I); File Name: TGMA45_b_dect_rm_2.da4

DUT: Panasonic; Type: KX-TGMA45; Serial: 6160093_000001
Program Name: DECT

Communication System: DECT US; Frequency: 1924.99 MHz;Duty Cycle: 1:24
Medium parameters used: f = 1924.99 MHz; σ = 1.44 mho/m; ε_r = 40.2; ρ = 1000 kg/m^3
Phantom section: Right Section

DASY4 Configuration:
- Probe: ET3DV6R - SN1669; ConvF(4.97, 4.97, 4.97); Calibrated: 19.02.2015
- Sensor-Surface: 4mm (Mechanical Surface Detection)
- Electronics: DAE3 Sn335; Calibrated: 16.02.2016
- Phantom: SAM Glycol 1176; Type: Speag; Serial: 1176
- Measurement SW: DASY4, V4.7 Build 80; Postprocessing SW: SEMCAD, V1.8 Build 186

Cheek Right/Area Scan (7x14x1): Measurement grid: dx=15mm, dy=15mm
Maximum value of SAR (measured) = 0.008 mW/g
Cheek Right/Zoom Scan (7x7x7)/Cube 0: Measurement grid: dx=5mm, dy=5mm, dz=5mm
Reference Value = 2.56 V/m; Power Drift = 0.071 dB
Peak SAR (extrapolated) = 0.011 W/kg
SAR(1 g) = 0.00782 mW/g; SAR(10 g) = 0.00492 mW/g

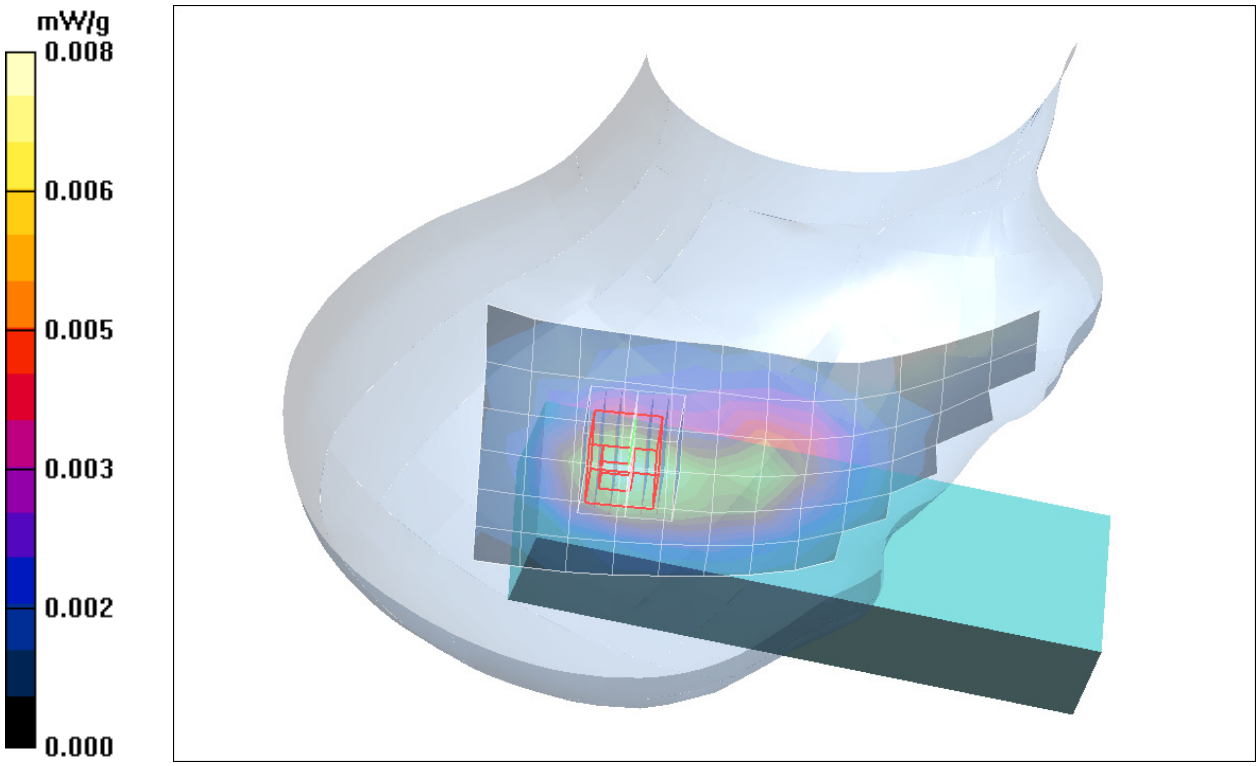

Fig. 4: SAR distribution for DECT US, channel 2, antenna 1, tilted position, right side of head (February 29, 2016)

Test Laboratory: IMST GmbH, DASY Blue (I); File Name: TGMA45_b_dect_lm_1_ant2.da4

DUT: Panasonic; Type: KX-TGMA45; Serial: 6160093_000001
Program Name: DECT

Communication System: DECT US; Frequency: 1924.99 MHz;Duty Cycle: 1:24
Medium parameters used: f = 1924.99 MHz; σ = 1.44 mho/m; ε_r = 40.2; ρ = 1000 kg/m^3
Phantom section: Left Section

DASY4 Configuration:
- Probe: ET3DV6R - SN1669; ConvF(4.97, 4.97, 4.97); Calibrated: 19.02.2015
- Sensor-Surface: 4mm (Mechanical Surface Detection)
- Electronics: DAE3 Sn335; Calibrated: 16.02.2016
- Phantom: SAM Glycol 1176; Type: Speag; Serial: 1176
- Measurement SW: DASY4, V4.7 Build 80; Postprocessing SW: SEMCAD, V1.8 Build 186

Tilted Left/Area Scan (8x13x1): Measurement grid: dx=15mm, dy=15mm
Maximum value of SAR (measured) = 0.005 mW/g
Tilted Left/Zoom Scan (7x7x7)/Cube 0: Measurement grid: dx=5mm, dy=5mm, dz=5mm
Reference Value = 1.41 V/m; Power Drift = 0.089 dB
Peak SAR (extrapolated) = 0.007 W/kg
SAR(1 g) = 0.00529 mW/g; SAR(10 g) = 0.00349 mW/g
Maximum value of SAR (measured) = 0.006 mW/g

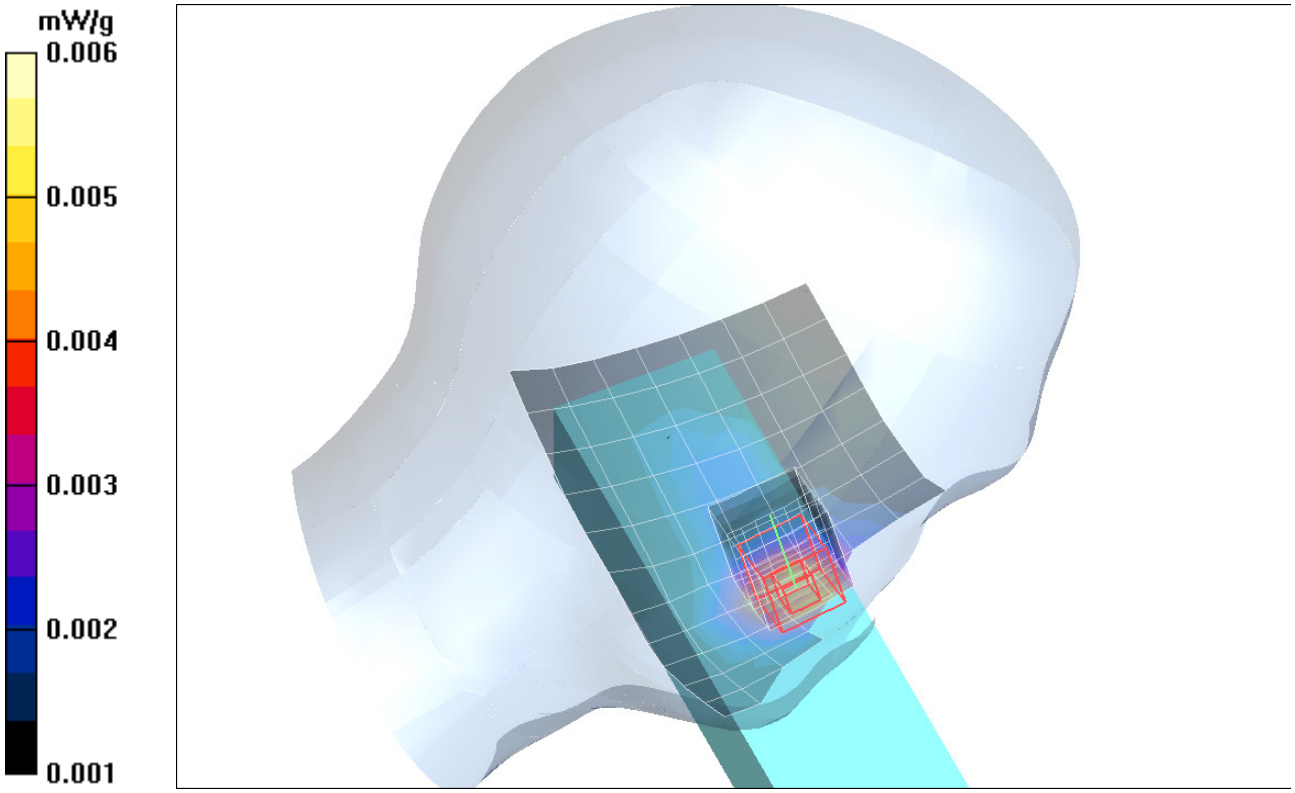

Fig. 5: SAR distribution for DECT US, channel 2, antenna 2, cheek position, left side of head (February 29, 2016)

Test Laboratory: IMST GmbH, DASY Blue (I); File Name: TGMA45_b_dect_lm_2_ant2.da4

DUT: Panasonic; Type: KX-TGMA45; Serial: 6160093_000001
Program Name: DECT

Communication System: DECT US; Frequency: 1924.99 MHz;Duty Cycle: 1:24
Medium parameters used: f = 1924.99 MHz; σ = 1.44 mho/m; ε_r = 40.2; ρ = 1000 kg/m^3
Phantom section: Left Section

DASY4 Configuration:
- Probe: ET3DV6R - SN1669; ConvF(4.97, 4.97, 4.97); Calibrated: 19.02.2015
- Sensor-Surface: 4mm (Mechanical Surface Detection)
- Electronics: DAE3 Sn335; Calibrated: 16.02.2016
- Phantom: SAM Glycol 1176; Type: Speag; Serial: 1176
- Measurement SW: DASY4, V4.7 Build 80; Postprocessing SW: SEMCAD, V1.8 Build 186

Tilted Left/Area Scan (8x13x1): Measurement grid: dx=15mm, dy=15mm
Maximum value of SAR (measured) = 0.003 mW/g
Tilted Left/Zoom Scan (7x7x7)/Cube 0: Measurement grid: dx=5mm, dy=5mm, dz=5mm
Reference Value = 0.961 V/m; Power Drift = -0.059 dB
Peak SAR (extrapolated) = 0.005 W/kg
SAR(1 g) = 0.00255 mW/g; SAR(10 g) = 0.00171 mW/g

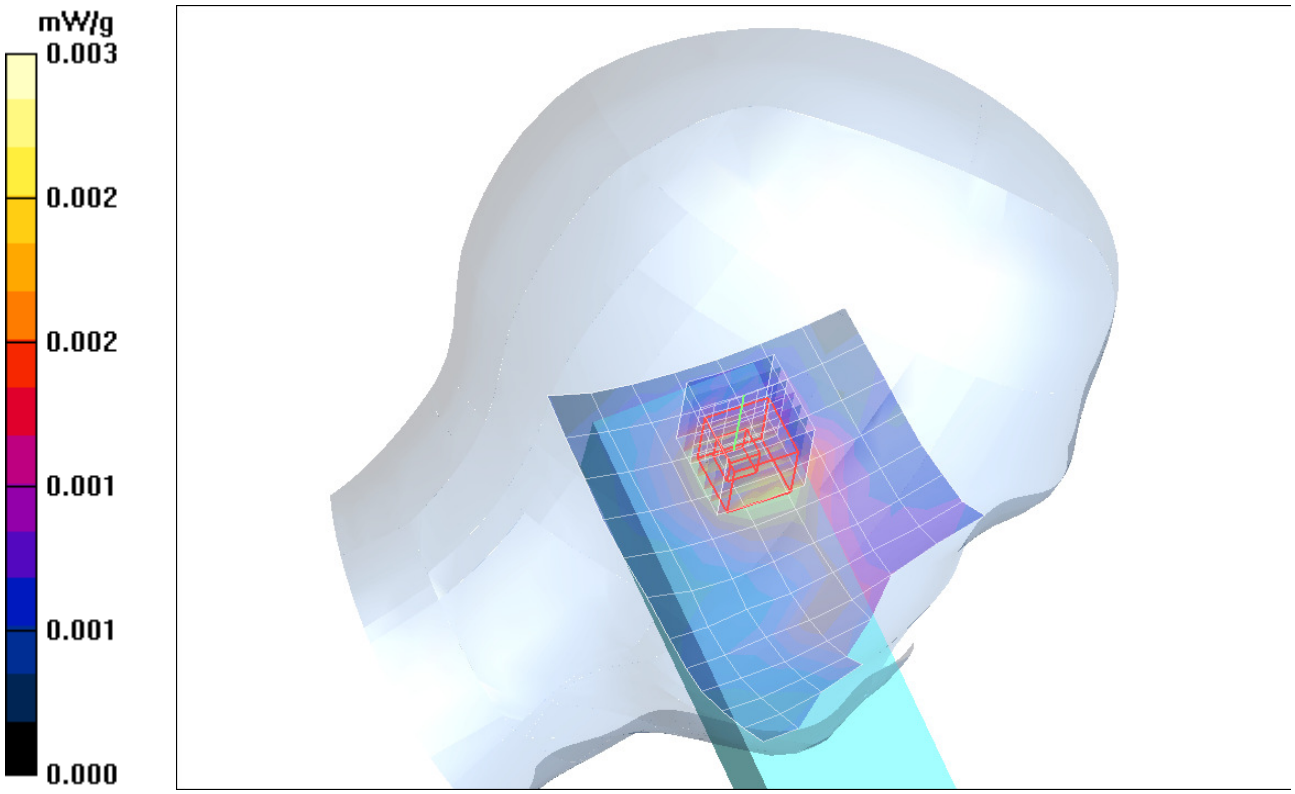

Fig. 6: SAR distribution for DECT US, channel 2, antenna 2, tilted position, left side of head (February 29, 2016)

Test Laboratory: IMST GmbH, DASY Blue (I); File Name: TGMA45_b_dect_rm_1_ant2.da4

DUT: Panasonic; Type: KX-TGMA45; Serial: 6160093_000001
Program Name: DECT

Communication System: DECT US; Frequency: 1924.99 MHz;Duty Cycle: 1:24
Medium parameters used: f = 1924.99 MHz; σ = 1.44 mho/m; ε_r = 40.2; ρ = 1000 kg/m^3
Phantom section: Right Section

DASY4 Configuration:
- Probe: ET3DV6R - SN1669; ConvF(4.97, 4.97, 4.97); Calibrated: 19.02.2015
- Sensor-Surface: 4mm (Mechanical Surface Detection)
- Electronics: DAE3 Sn335; Calibrated: 16.02.2016
- Phantom: SAM Glycol 1176; Type: Speag; Serial: 1176
- Measurement SW: DASY4, V4.7 Build 80; Postprocessing SW: SEMCAD, V1.8 Build 186

Cheek Right/Area Scan (7x14x1): Measurement grid: dx=15mm, dy=15mm
Maximum value of SAR (measured) = 0.008 mW/g
Cheek Right/Zoom Scan (7x7x7)/Cube 0: Measurement grid: dx=5mm, dy=5mm, dz=5mm
Reference Value = 1.37 V/m; Power Drift = -0.149 dB
Peak SAR (extrapolated) = 0.010 W/kg
SAR(1 g) = 0.00695 mW/g; SAR(10 g) = 0.0044 mW/g
Maximum value of SAR (measured) = 0.007 mW/g

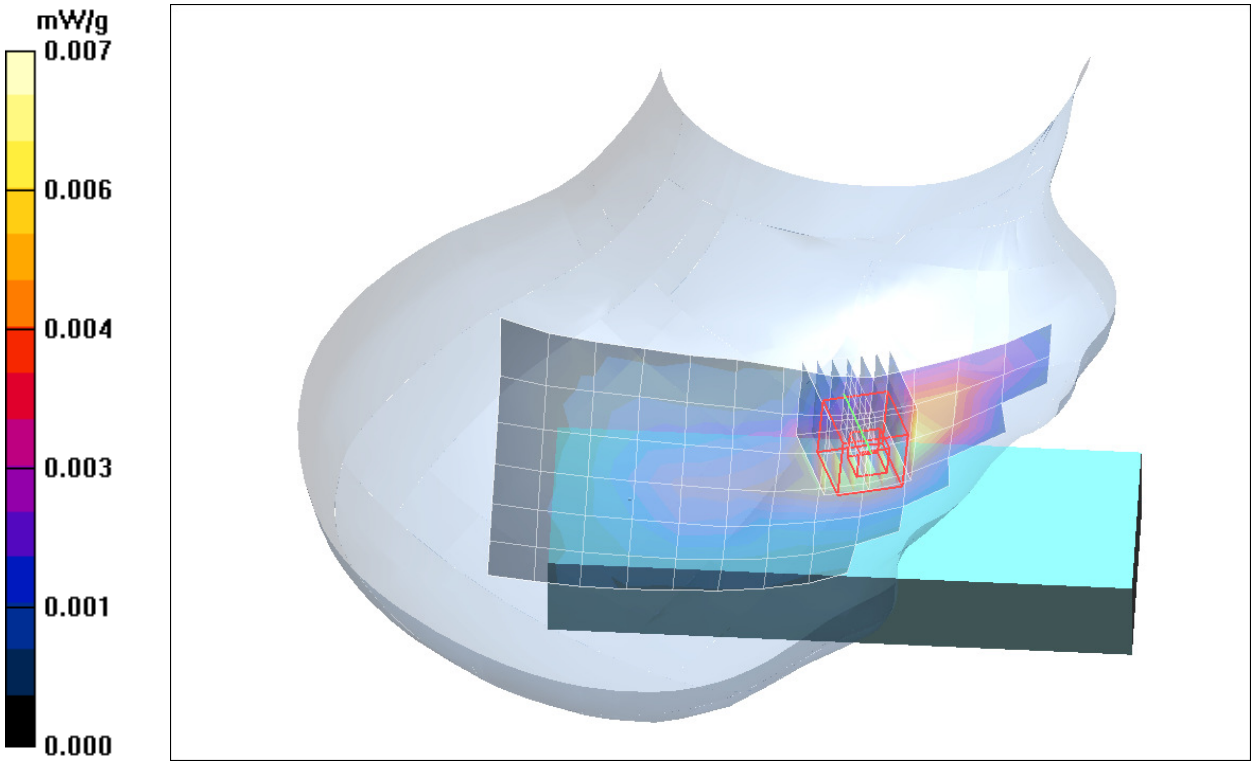

Fig. 7: SAR distribution for DECT US, channel 2, antenna 2, cheek position, right side of head (February 29, 2016)

Test Laboratory: IMST GmbH, DASY Blue (I); File Name: TGMA45_b_dect_rm_2_ant2.da4

DUT: Panasonic; Type: KX-TGMA45; Serial: 6160093_000001
Program Name: DECT

Communication System: DECT US; Frequency: 1924.99 MHz;Duty Cycle: 1:24
Medium parameters used: f = 1924.99 MHz; σ = 1.44 mho/m; ε_r = 40.2; ρ = 1000 kg/m^3
Phantom section: Right Section

DASY4 Configuration:
- Probe: ET3DV6R - SN1669; ConvF(4.97, 4.97, 4.97); Calibrated: 19.02.2015
- Sensor-Surface: 4mm (Mechanical Surface Detection)
- Electronics: DAE3 Sn335; Calibrated: 16.02.2016
- Phantom: SAM Glycol 1176; Type: Speag; Serial: 1176
- Measurement SW: DASY4, V4.7 Build 80; Postprocessing SW: SEMCAD, V1.8 Build 186

Cheek Right/Area Scan (7x14x1): Measurement grid: dx=15mm, dy=15mm
Maximum value of SAR (measured) = 0.003 mW/g
Cheek Right/Zoom Scan (7x7x7)/Cube 0: Measurement grid: dx=5mm, dy=5mm, dz=5mm
Reference Value = 1.47 V/m; Power Drift = 0.169 dB
Peak SAR (extrapolated) = 0.004 W/kg
SAR(1 g) = 0.00252 mW/g; SAR(10 g) = 0.00166 mW/g

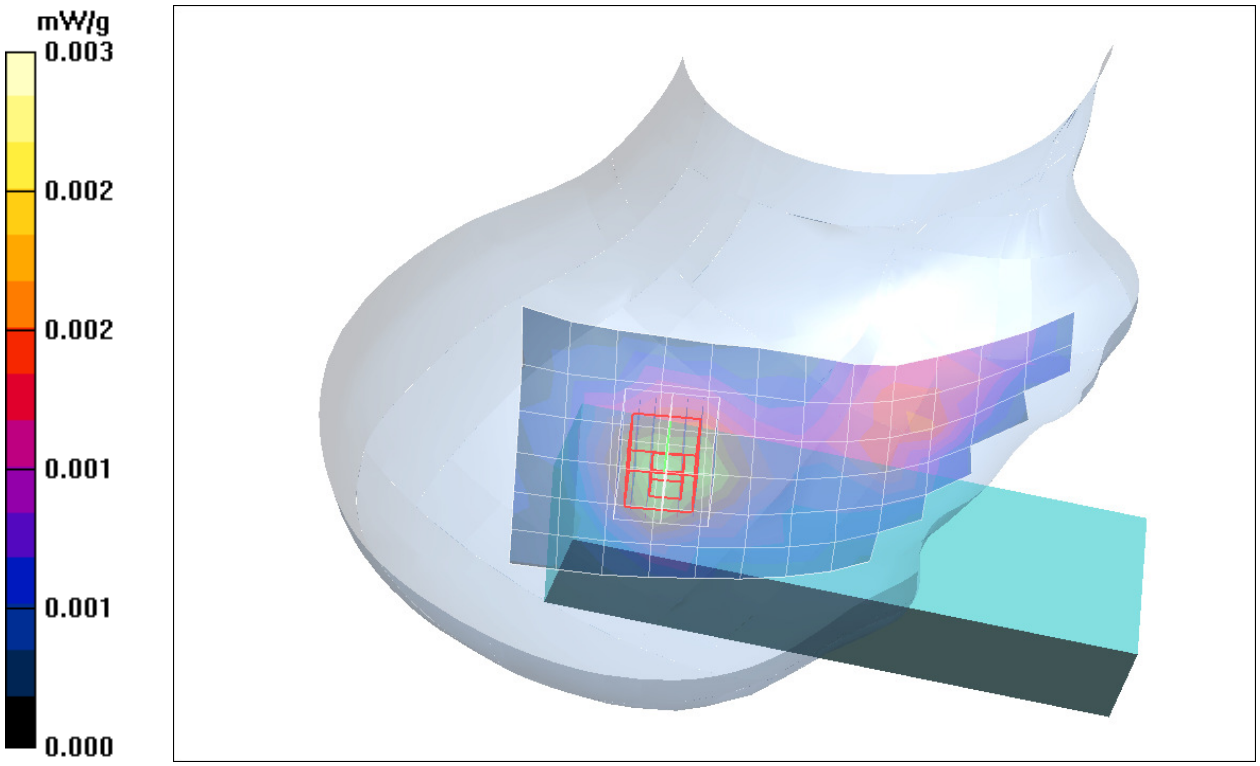

Fig. 8: SAR distribution for DECT US, channel 2, antenna 2, tilted position, right side of head (February 29, 2016)

Test Laboratory: IMST GmbH, DASY Yellow (II); File Name: TGMA45_y_dect_fm_front_ant1_0mm.da4

DUT: Panasonic; Type: KX-TGMA45; Serial: 6160093_000001
Program Name: US DECT

Communication System: DECT US; Frequency: 1924.99 MHz;Duty Cycle: 1:24
Medium parameters used: f = 1924.99 MHz; σ = 1.57 mho/m; ε_r = 54.2; ρ = 1000 kg/m^3
Phantom section: Flat Section

DASY4 Configuration:
- Probe: ET3DV6R - SN1579; ConvF(4.63, 4.63, 4.63); Calibrated: 2/23/2016
- Sensor-Surface: 4mm (Mechanical Surface Detection)
- Electronics: DAE4 Sn631; Calibrated: 9/16/2015
- Phantom: SAM 1340; Type: QD 000 P40 CB; Serial: TP-1340
- Measurement SW: DASY4, V4.7 Build 80; Postprocessing SW: SEMCAD, V1.8 Build 186

Body/Area Scan (7x15x1): Measurement grid: dx=15mm, dy=15mm
Maximum value of SAR (measured) = 0.010 mW/g
Body/Zoom Scan (7x7x7)/Cube 0: Measurement grid: dx=5mm, dy=5mm, dz=5mm
Reference Value = 1.92 V/m; Power Drift = 0.170 dB
Peak SAR (extrapolated) = 0.018 W/kg
SAR(1 g) = 0.00987 mW/g; SAR(10 g) = 0.00578 mW/g
Maximum value of SAR (measured) = 0.011 mW/g

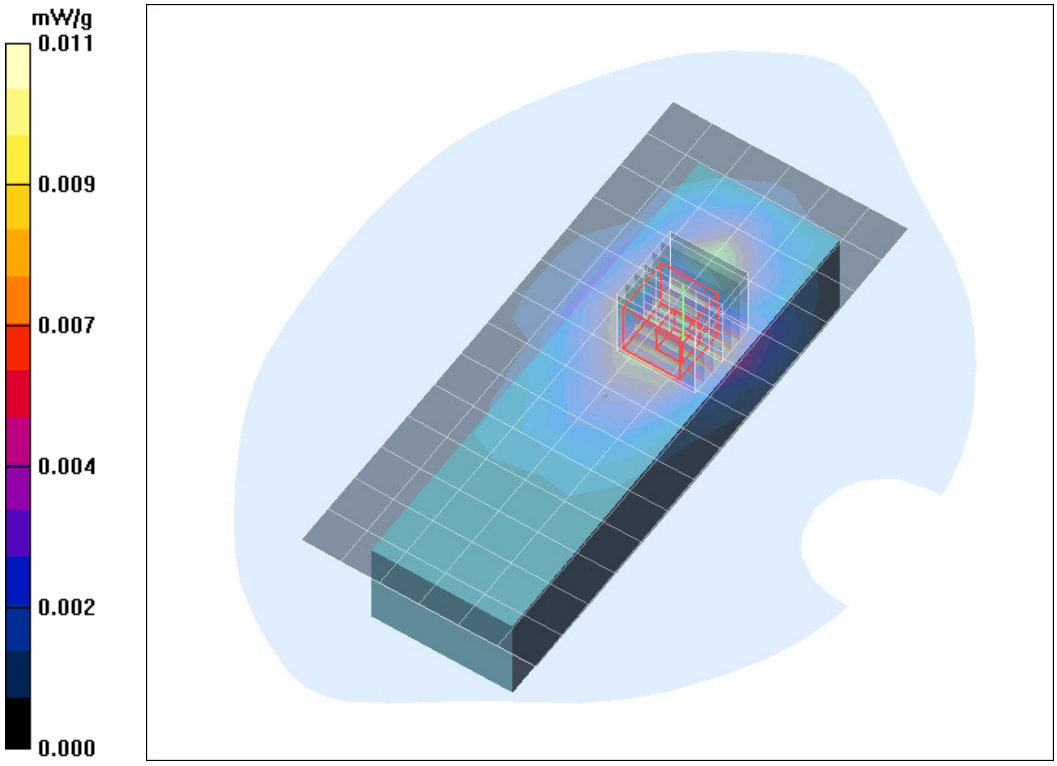

Fig. 9: SAR distribution for DECT US, channel 2, antenna 1, body worn configuration, front side of the device towards the phantom, HS attached (March 03, 2016)

Test Laboratory: IMST GmbH, DASY Yellow (II); File Name: TGMA45_y_dect_fm_back_ant1_0mm.da4

DUT: Panasonic; Type: KX-TGMA45; Serial: 6160093_000001
Program Name: US DECT

Communication System: DECT US; Frequency: 1924.99 MHz;Duty Cycle: 1:24
Medium parameters used: f = 1924.99 MHz; σ = 1.57 mho/m; ε_r = 54.2; ρ = 1000 kg/m^3
Phantom section: Flat Section

DASY4 Configuration:
- Probe: ET3DV6R - SN1579; ConvF(4.63, 4.63, 4.63); Calibrated: 2/23/2016
- Sensor-Surface: 4mm (Mechanical Surface Detection)
- Electronics: DAE4 Sn631; Calibrated: 9/16/2015
- Phantom: SAM 1340; Type: QD 000 P40 CB; Serial: TP-1340
- Measurement SW: DASY4, V4.7 Build 80; Postprocessing SW: SEMCAD, V1.8 Build 186

Body/Area Scan (7x15x1): Measurement grid: dx=15mm, dy=15mm
Maximum value of SAR (measured) = 0.018 mW/g
Body/Zoom Scan (7x7x7)/Cube 0: Measurement grid: dx=5mm, dy=5mm, dz=5mm
Reference Value = 3.59 V/m; Power Drift = 0.070 dB
Peak SAR (extrapolated) = 0.028 W/kg
SAR(1 g) = 0.017 mW/g; SAR(10 g) = 0.0096 mW/g
Maximum value of SAR (measured) = 0.019 mW/g

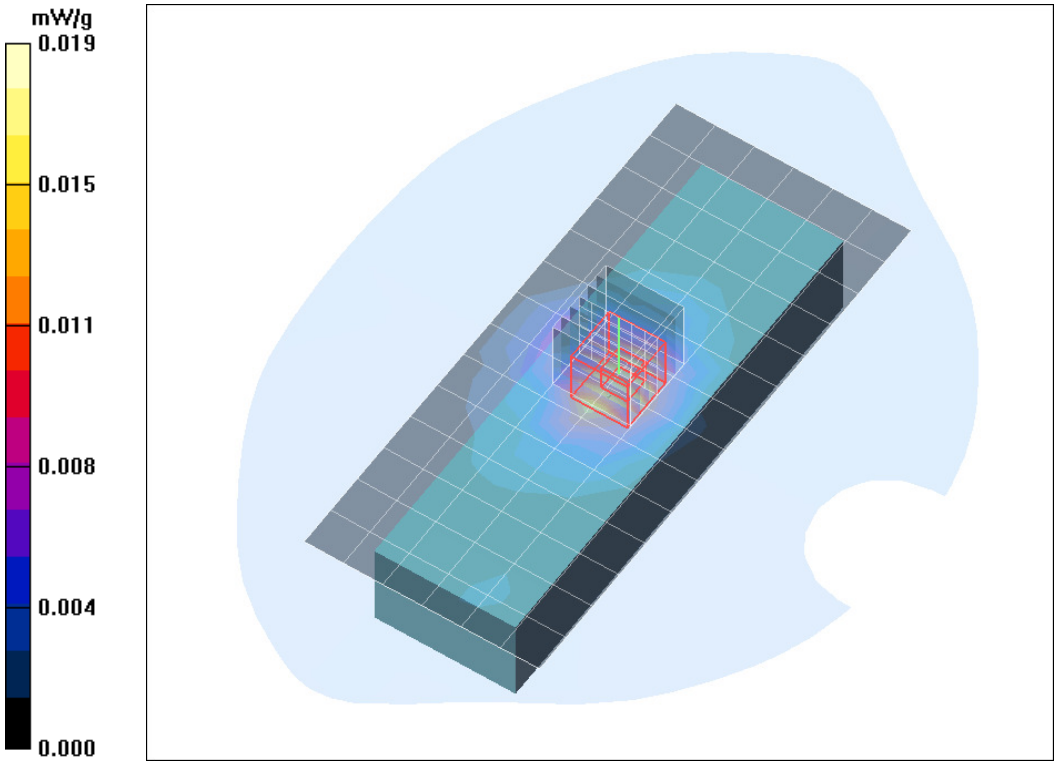

Fig. 10: SAR distribution for DECT US, channel 2, antenna 1, body worn configuration, back side of the device towards the phantom, HS attached (March 03, 2016)

Test Laboratory: IMST GmbH, DASY Yellow (II); File Name: TGMA45_y_dect_fm_front_ant2_0mm.da4

DUT: Panasonic; Type: KX-TGMA45; Serial: 6160093_000001
Program Name: US DECT

Communication System: DECT US; Frequency: 1924.99 MHz;Duty Cycle: 1:24
Medium parameters used: f = 1924.99 MHz; σ = 1.57 mho/m; ε_r = 54.2; ρ = 1000 kg/m^3
Phantom section: Flat Section

DASY4 Configuration:
- Probe: ET3DV6R - SN1579; ConvF(4.63, 4.63, 4.63); Calibrated: 2/23/2016
- Sensor-Surface: 4mm (Mechanical Surface Detection)
- Electronics: DAE4 Sn631; Calibrated: 9/16/2015
- Phantom: SAM 1340; Type: QD 000 P40 CB; Serial: TP-1340
- Measurement SW: DASY4, V4.7 Build 80; Postprocessing SW: SEMCAD, V1.8 Build 186

Body/Area Scan (7x15x1): Measurement grid: dx=15mm, dy=15mm
Maximum value of SAR (measured) = 0.020 mW/g
Body/Zoom Scan (7x7x7)/Cube 0: Measurement grid: dx=5mm, dy=5mm, dz=5mm
Reference Value = 1.16 V/m; Power Drift = 0.144 dB
Peak SAR (extrapolated) = 0.031 W/kg
SAR(1 g) = 0.019 mW/g; SAR(10 g) = 0.011 mW/g
Maximum value of SAR (measured) = 0.021 mW/g

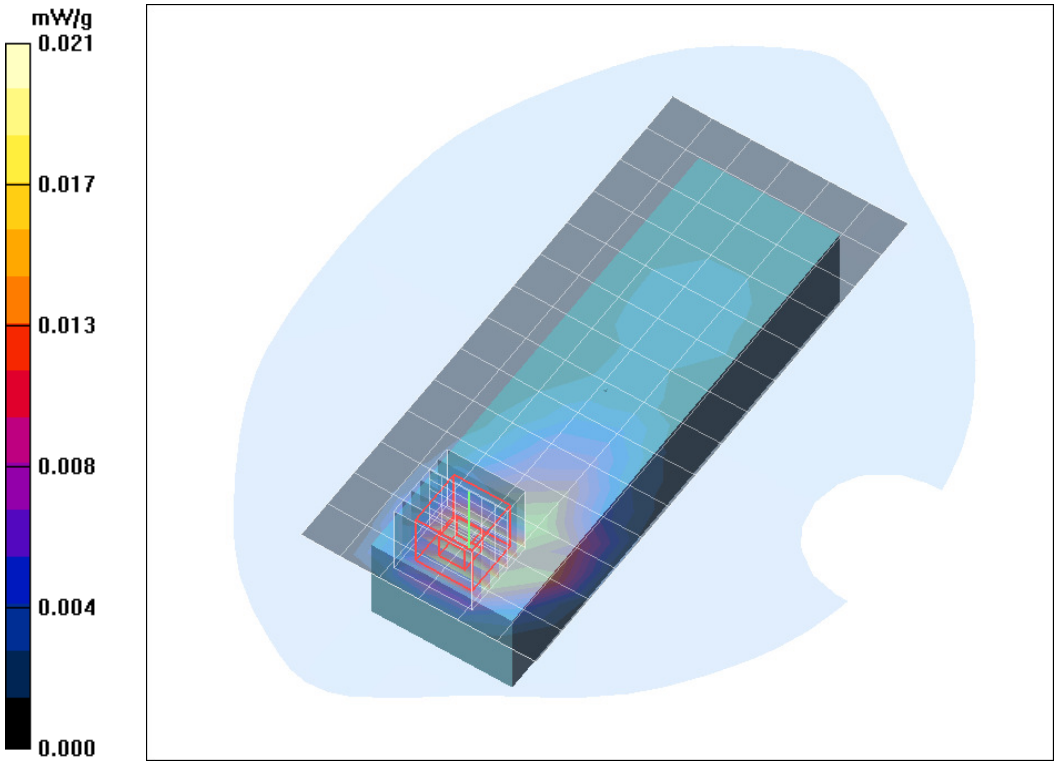

Fig. 11: SAR distribution for DECT US, channel 2, antenna 2, body worn configuration, front side of the device towards the phantom, HS attached (March 03, 2016)

Test Laboratory: IMST GmbH, DASY Yellow (II); File Name: TGMA45_y_dect_fm_back_ant2_0mm.da4

DUT: Panasonic; Type: KX-TGMA45; Serial: 6160093_000001
Program Name: US DECT

Communication System: DECT US; Frequency: 1924.99 MHz;Duty Cycle: 1:24
Medium parameters used: f = 1924.99 MHz; σ = 1.57 mho/m; ε_r = 54.2; ρ = 1000 kg/m^3
Phantom section: Flat Section

DASY4 Configuration:
- Probe: ET3DV6R - SN1579; ConvF(4.63, 4.63, 4.63); Calibrated: 2/23/2016
- Sensor-Surface: 4mm (Mechanical Surface Detection)
- Electronics: DAE4 Sn631; Calibrated: 9/16/2015
- Phantom: SAM 1340; Type: QD 000 P40 CB; Serial: TP-1340
- Measurement SW: DASY4, V4.7 Build 80; Postprocessing SW: SEMCAD, V1.8 Build 186

Body/Area Scan (7x15x1): Measurement grid: dx=15mm, dy=15mm
Maximum value of SAR (measured) = 0.012 mW/g
Body/Zoom Scan (7x7x7)/Cube 0: Measurement grid: dx=5mm, dy=5mm, dz=5mm
Reference Value = 2.77 V/m; Power Drift = 0.092 dB
Peak SAR (extrapolated) = 0.016 W/kg
SAR(1 g) = 0.011 mW/g; SAR(10 g) = 0.00645 mW/g

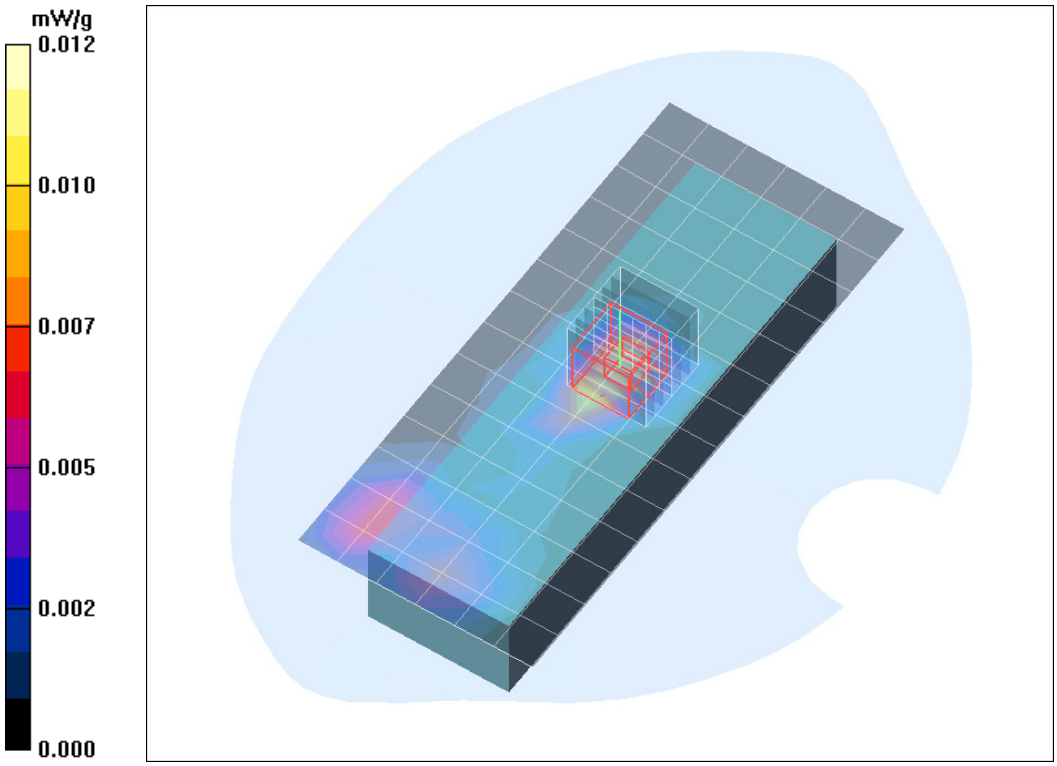

Fig. 12: SAR distribution for DECT US, channel 2, antenna 2, body worn configuration, back side of the device towards the phantom, HS attached (March 03, 2016)