APPENDIX 2 : SAR Measurement data

1. Evaluation procedure

The evaluation was performed with the following procedure:

Step 1: Measurement of the E-field at a fixed location above the ear point or central position of flat phantom was used as a reference value for assessing the power drop.

Step 2: The SAR distribution at the exposed side of head or body position was measured at a distance of each device from the inner surface of the shell. The area covered the entire dimension of the antenna of EUT and the horizontal grid spacing was 15 mm x 15 mm . Based on these data, the area of the maximum absorption was determined by spline interpolation.

Step 3: Around this point found in the Step 2 (area scan) , a volume of 30mm x 30mm x 30mm was assessed by measuring 7 x 7 x 7 points. And for any secondary peaks found in the Step2 which are within 2dB of maximum peak (level more than ambient noise (≥0.012 W/kg)) and not with this Step3 (Zoom scan) is repeated. On the basis of this data set, the spatial peak SAR value was evaluated under the following procedure:

(1). The data at the surface were extrapolated, since the center of the dipoles is 1mm away from the tip of the probe and the distance between the surface and the lowest measuring point is 1.3 mm. The extrapolation was based on a least square algorithm [4]. A polynomial of the fourth order was calculated through the points in z-axes.
This polynomial was then used to evaluate the points between the surface and the probe tip.

(2). The maximum interpolated value was searched with a straightforward algorithm. Around this maximum the SAR values averaged over the spatial volumes (1 g or 10 g) were computed by the 3D-Spline interpolation algorithm. The 3D-Spline is composed of three one-dimensional splines with the “Not a knot"-condition (in x, y and z-directions) [4], [5]. The volume was integrated with the trapezoidal-algorithm. One thousand points (10 x 10 x 10) were interpolated to calculate the average.

(3). All neighboring volumes were evaluated until no neighboring volume with a higher average value was found.

Step 4: Re-measurement of the E-field at the same location as in Step 1.

2. Head measurement data of ANT.0

KX-WPA100(Hand Unit) / Head / Left cheek / Ant.0 / 2437MHz / 11b DBPSK (1Mbps)

Crest factor: 1
Medium parameters used: f = 2450 MHz; σ = 1.88 mho/m; ε_r = 37.7; ρ = 1000 kg/m^3
Phantom section: Left Section
Measurement Standard: DASY4 (High Precision Assessment)
DASY4 Configuration:
Probe: EX3DV3 - SN3507; ConvF(8.26, 8.26, 8.26); Calibrated: 2006/05/26
Sensor-Surface: 2mm (Mechanical Surface Detection)
Electronics: DAE3 Sn509; Calibrated: 2006/06/15
Phantom: SAM 1196
Measurement SW: DASY4, V4.6 Build 23; Postprocessing SW: SEMCAD, V1.8 Build 160

Area Scan (71x81x1): Measurement grid: dx=15mm, dy=15mm
Maximum value of SAR (interpolated) = 0.177 mW/g

Zoom Scan (7x7x7)/Cube 0: Measurement grid: dx=5mm, dy=5mm, dz=5mm
Reference Value = 9.48 V/m; Power Drift = -0.063 dB
Peak SAR (extrapolated) = 0.234 W/kg
SAR(1 g) = 0.120 mW/g; SAR(10 g) = 0.061 mW/g
Maximum value of SAR (measured) = 0.175 mW/g

Zoom Scan (7x7x7)/Cube 1: Measurement grid: dx=5mm, dy=5mm, dz=5mm
Reference Value = 9.48 V/m; Power Drift = -0.063 dB
Peak SAR (extrapolated) = 0.157 W/kg
SAR(1 g) = 0.093 mW/g; SAR(10 g) = 0.050 mW/g
Maximum value of SAR (measured) = 0.126 mW/g

Test Date = 08/01/06
Ambient Temperature = 25.0 degree C.
Liquid Temperature = Before 23.8 degree C. , After 23.8 degree C.

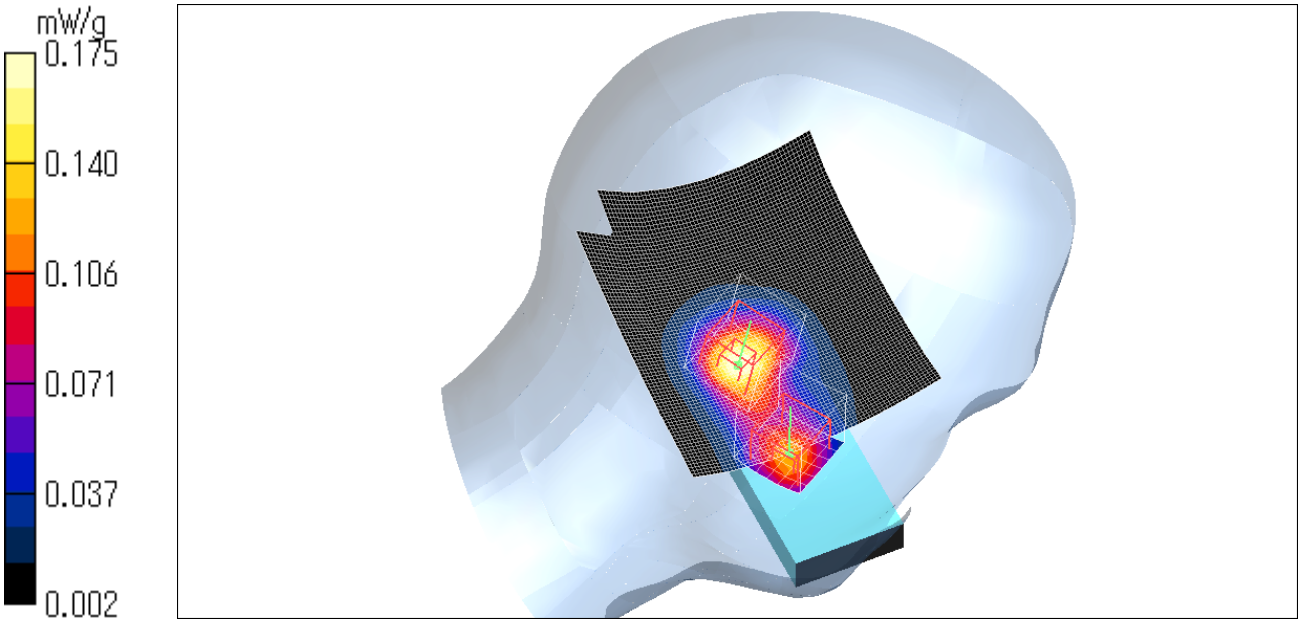

KX-WPA100(Hand Unit) / Head / Left tilt / Ant.0 / 2437MHz / 11b DBPSK (1Mbps)

Crest factor: 1
Medium parameters used: f = 2450 MHz; σ = 1.88 mho/m; ε_r = 37.7; ρ = 1000 kg/m^3
Phantom section: Left Section
Measurement Standard: DASY4 (High Precision Assessment)
DASY4 Configuration:
Probe: EX3DV3 - SN3507; ConvF(8.26, 8.26, 8.26); Calibrated: 2006/05/26
Sensor-Surface: 2mm (Mechanical Surface Detection)
Electronics: DAE3 Sn509; Calibrated: 2006/06/15
Phantom: SAM 1196
Measurement SW: DASY4, V4.6 Build 23; Postprocessing SW: SEMCAD, V1.8 Build 160

Area Scan (71x81x1): Measurement grid: dx=15mm, dy=15mm
Maximum value of SAR (interpolated) = 0.186 mW/g

Zoom Scan (7x7x7)/Cube 0: Measurement grid: dx=5mm, dy=5mm, dz=5mm
Reference Value = 9.99 V/m; Power Drift = -0.008 dB
Peak SAR (extrapolated) = 0.243 W/kg
SAR(1 g) = 0.125 mW/g; SAR(10 g) = 0.063 mW/g
Maximum value of SAR (measured) = 0.179 mW/g

Test Date = 08/01/06
Ambient Temperature = 25.0 degree C.
Liquid Temperature = Before 23.8 degree C. , After 23.8 degree C.

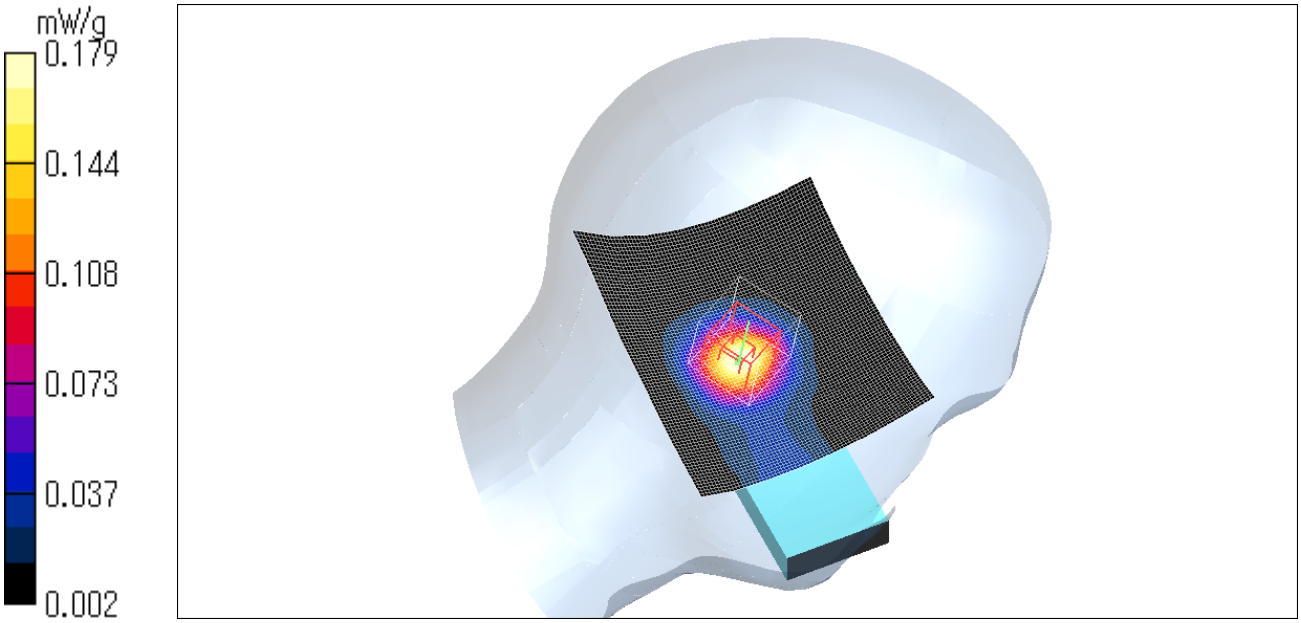

KX-WPA100(Hand Unit) / Head / Right cheek / Ant.0 / 2437MHz / 11b DBPSK (1Mbps)

Crest factor: 1
Medium parameters used: f = 2450 MHz; σ = 1.88 mho/m; ε_r = 37.7; ρ = 1000 kg/m^3
Phantom section: Right Section
Measurement Standard: DASY4 (High Precision Assessment)

DASY4 Configuration:
Probe: EX3DV3 - SN3507; ConvF(8.26, 8.26, 8.26); Calibrated: 2006/05/26
Sensor-Surface: 2mm (Mechanical Surface Detection)
Electronics: DAE3 Sn509; Calibrated: 2006/06/15
Phantom: SAM 1196
Measurement SW: DASY4, V4.6 Build 23; Postprocessing SW: SEMCAD, V1.8 Build 160

Area Scan (71x81x1): Measurement grid: dx=15mm, dy=15mm
Maximum value of SAR (interpolated) = 0.224 mW/g

Zoom Scan (7x7x7)/Cube 0: Measurement grid: dx=5mm, dy=5mm, dz=5mm
Reference Value = 8.58 V/m; Power Drift = 0.114 dB
Peak SAR (extrapolated) = 0.301 W/kg
SAR(1 g) = 0.153 mW/g; SAR(10 g) = 0.073 mW/g
Maximum value of SAR (measured) = 0.229 mW/g
Zoom Scan (7x7x7)/Cube 1: Measurement grid: dx=5mm, dy=5mm, dz=5mm
Reference Value = 8.58 V/m; Power Drift = 0.114 dB
Peak SAR (extrapolated) = 0.202 W/kg
SAR(1 g) = 0.117 mW/g; SAR(10 g) = 0.062 mW/g
Maximum value of SAR (measured) = 0.160 mW/g

Test Date = 08/01/06
Ambient Temperature = 24.8 degree C.
Liquid Temperature = Before 23.8 degree C. , After 23.8 degree C.

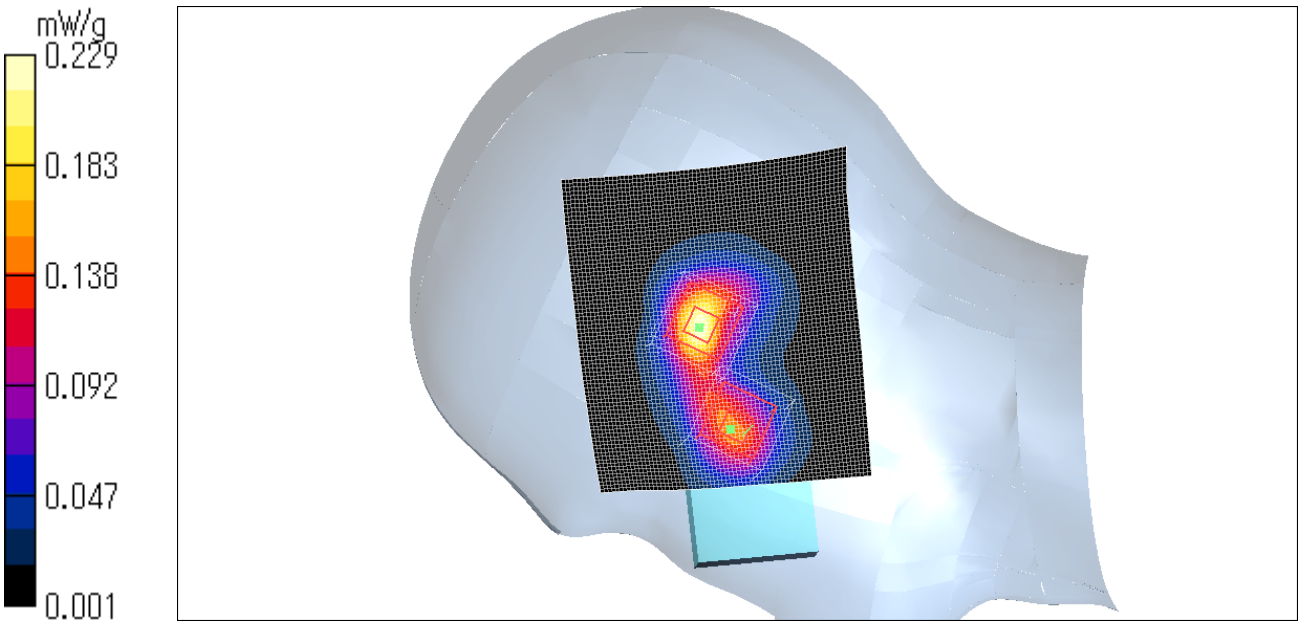

KX-WPA100(Hand Unit) / Head / Right tilt / Ant.0 / 2437MHz / 11b DBPSK (1Mbps)

Crest factor: 1
Medium parameters used: f = 2450 MHz; σ = 1.88 mho/m; ε_r = 37.7; ρ = 1000 kg/m^3
Phantom section: Right Section
Measurement Standard: DASY4 (High Precision Assessment)

DASY4 Configuration:
Probe: EX3DV3 - SN3507; ConvF(8.26, 8.26, 8.26); Calibrated: 2006/05/26
Sensor-Surface: 2mm (Mechanical Surface Detection)
Electronics: DAE3 Sn509; Calibrated: 2006/06/15
Phantom: SAM 1196
Measurement SW: DASY4, V4.6 Build 23; Postprocessing SW: SEMCAD, V1.8 Build 160

Area Scan (71x81x1): Measurement grid: dx=15mm, dy=15mm
Maximum value of SAR (interpolated) = 0.205 mW/g

Zoom Scan (7x7x7)/Cube 0: Measurement grid: dx=5mm, dy=5mm, dz=5mm
Reference Value = 9.55 V/m; Power Drift = 0.118 dB
Peak SAR (extrapolated) = 0.260 W/kg
SAR(1 g) = 0.136 mW/g; SAR(10 g) = 0.068 mW/g
Maximum value of SAR (measured) = 0.197 mW/g

Test Date = 08/01/06
Ambient Temperature = 25.0 degree C.
Liquid Temperature = Before 23.8 degree C. , After 23.8 degree C.

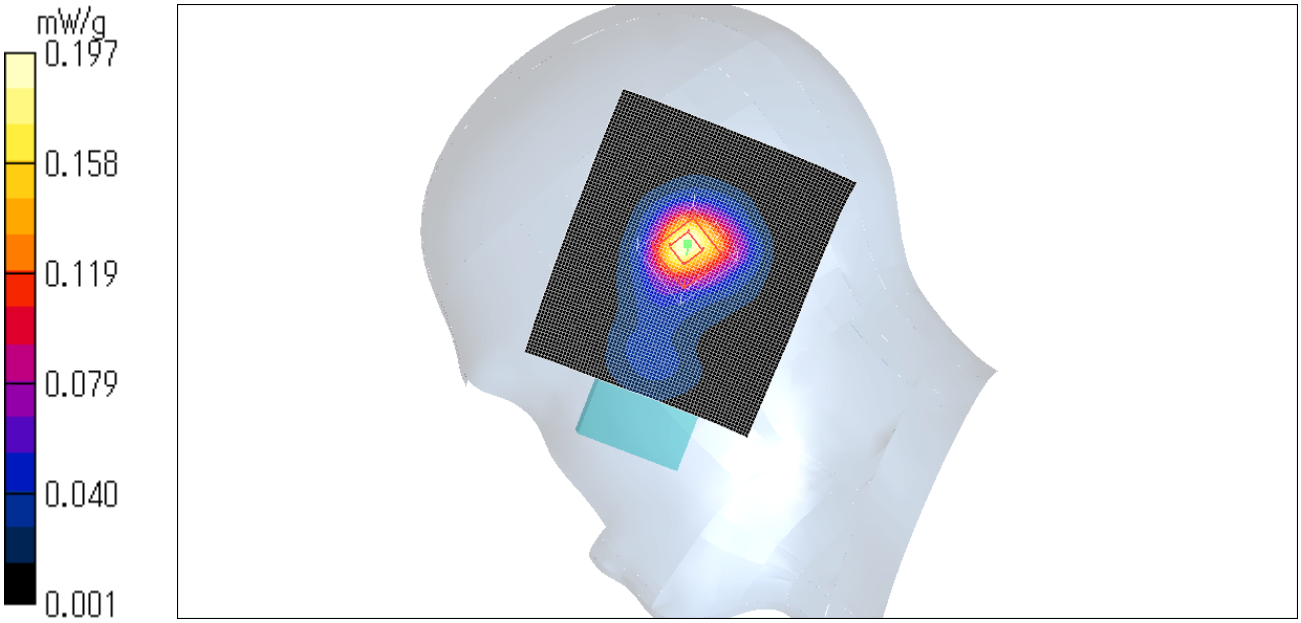

KX-WPA100(Hand Unit) / Head / Right cheek / Ant.0 / 2437MHz / 11b CCK (11Mbps)

Crest factor: 1.2
Medium parameters used: f = 2450 MHz; σ = 1.88 mho/m; ε_r = 37.7; ρ = 1000 kg/m^3
Phantom section: Right Section
Measurement Standard: DASY4 (High Precision Assessment)

DASY4 Configuration:
Probe: EX3DV3 - SN3507; ConvF(8.26, 8.26, 8.26); Calibrated: 2006/05/26
Sensor-Surface: 2mm (Mechanical Surface Detection)
Electronics: DAE3 Sn509; Calibrated: 2006/06/15
Phantom: SAM 1196
Measurement SW: DASY4, V4.6 Build 23; Postprocessing SW: SEMCAD, V1.8 Build 160

Area Scan (71x81x1): Measurement grid: dx=15mm, dy=15mm
Maximum value of SAR (interpolated) = 0.176 mW/g

Zoom Scan (7x7x7)/Cube 0: Measurement grid: dx=5mm, dy=5mm, dz=5mm
Reference Value = 7.79 V/m; Power Drift = 0.109 dB
Peak SAR (extrapolated) = 0.227 W/kg
SAR(1 g) = 0.118 mW/g; SAR(10 g) = 0.057 mW/g
Maximum value of SAR (measured) = 0.172 mW/g
Zoom Scan (7x7x7)/Cube 1: Measurement grid: dx=5mm, dy=5mm, dz=5mm
Reference Value = 7.79 V/m; Power Drift = 0.109 dB
Peak SAR (extrapolated) = 0.170 W/kg
SAR(1 g) = 0.098 mW/g; SAR(10 g) = 0.051 mW/g
Maximum value of SAR (measured) = 0.135 mW/g

Test Date = 08/01/06
Ambient Temperature = 25.0 degree C.
Liquid Temperature = Before 23.8 degree C. , After 23.9 degree C.

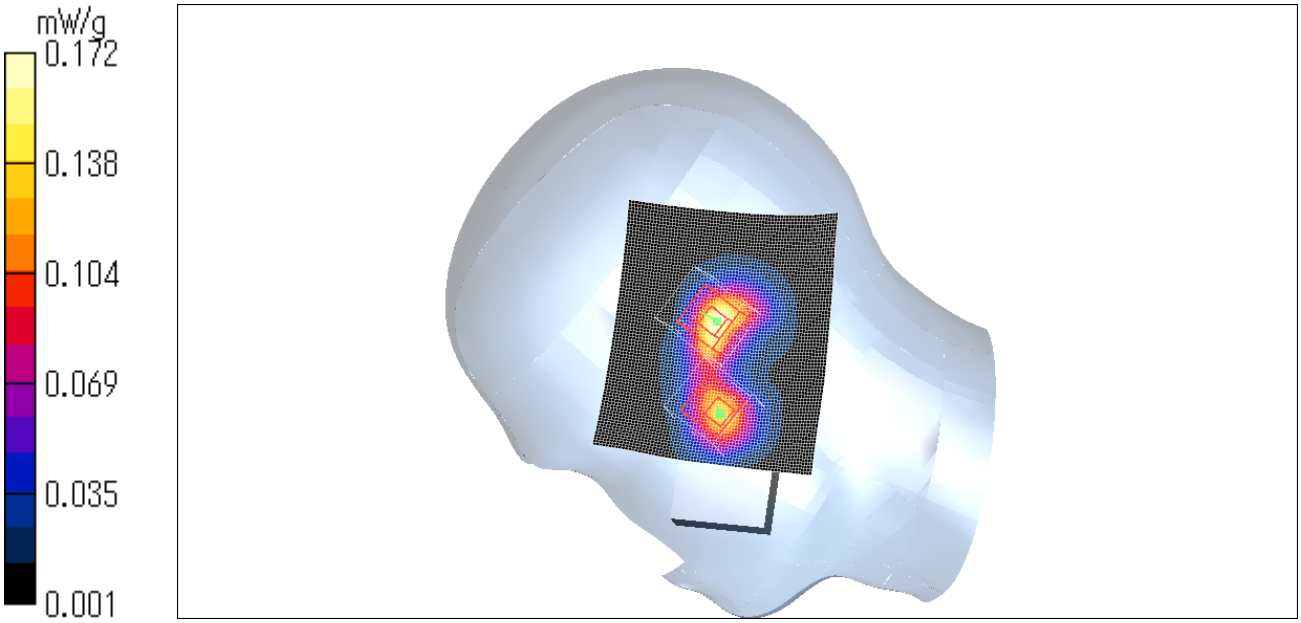

KX-WPA100(Hand Unit) / Head / Right cheek / Ant.0 / 2412MHz / 11b DBPSK (1Mbps)

Crest factor: 1
Medium parameters used: f = 2450 MHz; σ = 1.88 mho/m; ε_r = 37.7; ρ = 1000 kg/m^3
Phantom section: Right Section
Measurement Standard: DASY4 (High Precision Assessment)

DASY4 Configuration:
Probe: EX3DV3 - SN3507; ConvF(8.26, 8.26, 8.26); Calibrated: 2006/05/26
Sensor-Surface: 2mm (Mechanical Surface Detection)
Electronics: DAE3 Sn509; Calibrated: 2006/06/15
Phantom: SAM 1196
Measurement SW: DASY4, V4.6 Build 23; Postprocessing SW: SEMCAD, V1.8 Build 160

Area Scan (71x81x1): Measurement grid: dx=15mm, dy=15mm
Maximum value of SAR (interpolated) = 0.184 mW/g

Zoom Scan (7x7x7)/Cube 0: Measurement grid: dx=5mm, dy=5mm, dz=5mm
Reference Value = 8.16 V/m; Power Drift = 0.166 dB
Peak SAR (extrapolated) = 0.245 W/kg
SAR(1 g) = 0.127 mW/g; SAR(10 g) = 0.062 mW/g
Maximum value of SAR (measured) = 0.187 mW/g
Zoom Scan (7x7x7)/Cube 1: Measurement grid: dx=5mm, dy=5mm, dz=5mm
Reference Value = 8.16 V/m; Power Drift = 0.166 dB
Peak SAR (extrapolated) = 0.218 W/kg
SAR(1 g) = 0.126 mW/g; SAR(10 g) = 0.066 mW/g
Maximum value of SAR (measured) = 0.175 mW/g

Test Date = 08/01/06
Ambient Temperature = 25.0 degree C.
Liquid Temperature = Before 24.0 degree C. , After 24.0 degree C.

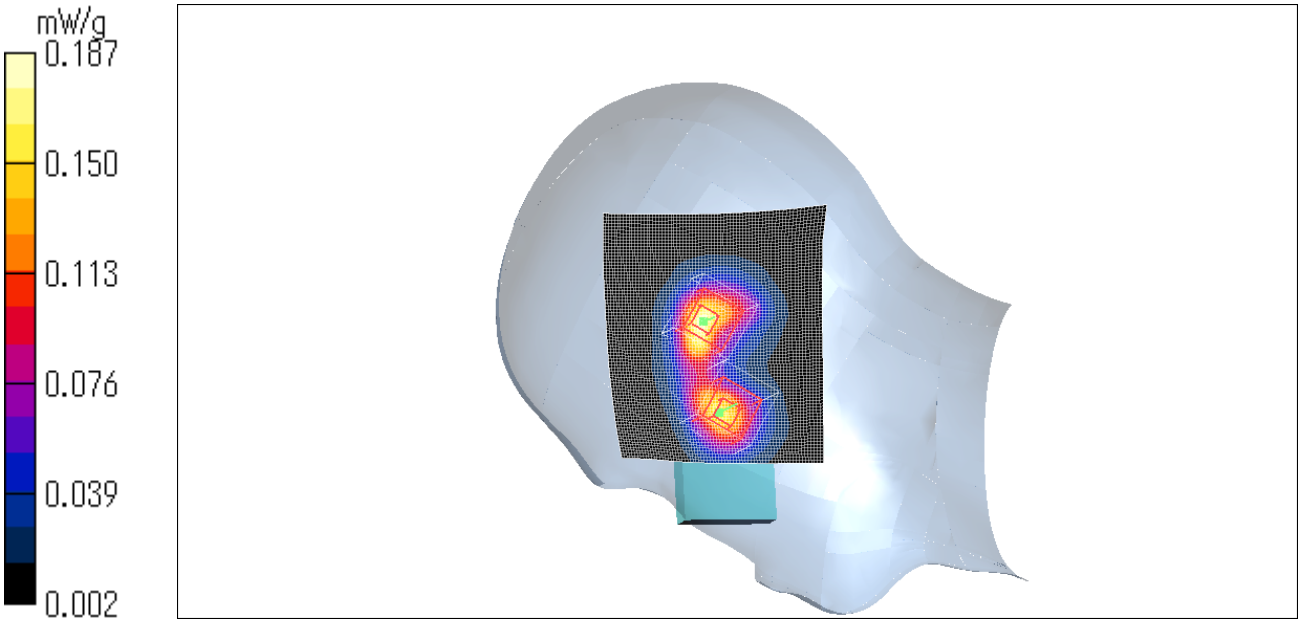

KX-WPA100(Hand Unit) / Head / Right cheek / Ant.0 / 2462MHz / 11b DBPSK (1Mbps)

Crest factor: 1
Medium parameters used: f = 2450 MHz; σ = 1.88 mho/m; ε_r = 37.7; ρ = 1000 kg/m^3
Phantom section: Right Section
Measurement Standard: DASY4 (High Precision Assessment)

DASY4 Configuration:
Probe: EX3DV3 - SN3507; ConvF(8.26, 8.26, 8.26); Calibrated: 2006/05/26
Sensor-Surface: 2mm (Mechanical Surface Detection)
Electronics: DAE3 Sn509; Calibrated: 2006/06/15
Phantom: SAM 1196
Measurement SW: DASY4, V4.6 Build 23; Postprocessing SW: SEMCAD, V1.8 Build 160

Area Scan (71x81x1): Measurement grid: dx=15mm, dy=15mm
Maximum value of SAR (interpolated) = 0.236 mW/g

Zoom Scan (7x7x7)/Cube 0: Measurement grid: dx=5mm, dy=5mm, dz=5mm
Reference Value = 9.54 V/m; Power Drift = -0.169 dB
Peak SAR (extrapolated) = 0.326 W/kg
SAR(1 g) = 0.169 mW/g; SAR(10 g) = 0.080 mW/g
Maximum value of SAR (measured) = 0.252 mW/g

Test Date = 08/01/06
Ambient Temperature = 25.0 degree C.
Liquid Temperature = Before 24.2 degree C. , After 24.3 degree C.

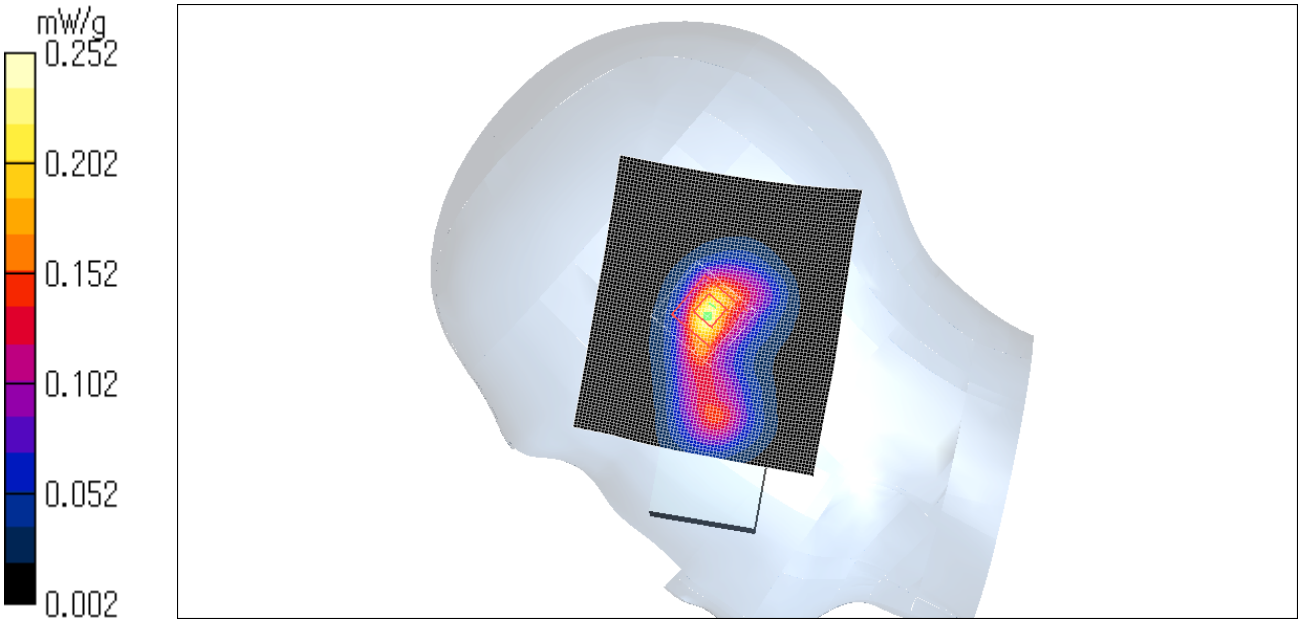

KX-WPA100(Hand Unit) / Head / Left cheek / Ant.0 / 2437MHz / 11g BPSK (6Mbps)

Crest factor: 1.1
Medium parameters used: f = 2450 MHz; σ = 1.88 mho/m; ε_r = 37.7; ρ = 1000 kg/m^3
Phantom section: Left Section
Measurement Standard: DASY4 (High Precision Assessment)

DASY4 Configuration:
Probe: EX3DV3 - SN3507; ConvF(8.26, 8.26, 8.26); Calibrated: 2006/05/26
Sensor-Surface: 2mm (Mechanical Surface Detection)
Electronics: DAE3 Sn509; Calibrated: 2006/06/15
Phantom: SAM 1196
Measurement SW: DASY4, V4.6 Build 23; Postprocessing SW: SEMCAD, V1.8 Build 160

Area Scan (71x81x1): Measurement grid: dx=15mm, dy=15mm
Maximum value of SAR (interpolated) = 0.074 mW/g

Zoom Scan (7x7x7)/Cube 0: Measurement grid: dx=5mm, dy=5mm, dz=5mm
Reference Value = 6.49 V/m; Power Drift = -0.058 dB
Peak SAR (extrapolated) = 0.102 W/kg
SAR(1 g) = 0.052 mW/g; SAR(10 g) = 0.027 mW/g
Maximum value of SAR (measured) = 0.076 mW/g
Zoom Scan (7x7x7)/Cube 1: Measurement grid: dx=5mm, dy=5mm, dz=5mm
Reference Value = 6.49 V/m; Power Drift = -0.058 dB
Peak SAR (extrapolated) = 0.083 W/kg
SAR(1 g) = 0.047 mW/g; SAR(10 g) = 0.024 mW/g
Maximum value of SAR (measured) = 0.065 mW/g

Test Date = 08/01/06
Ambient Temperature = 25.0 degree C.
Liquid Temperature = Before 24.0 degree C. , After 24.0 degree C.

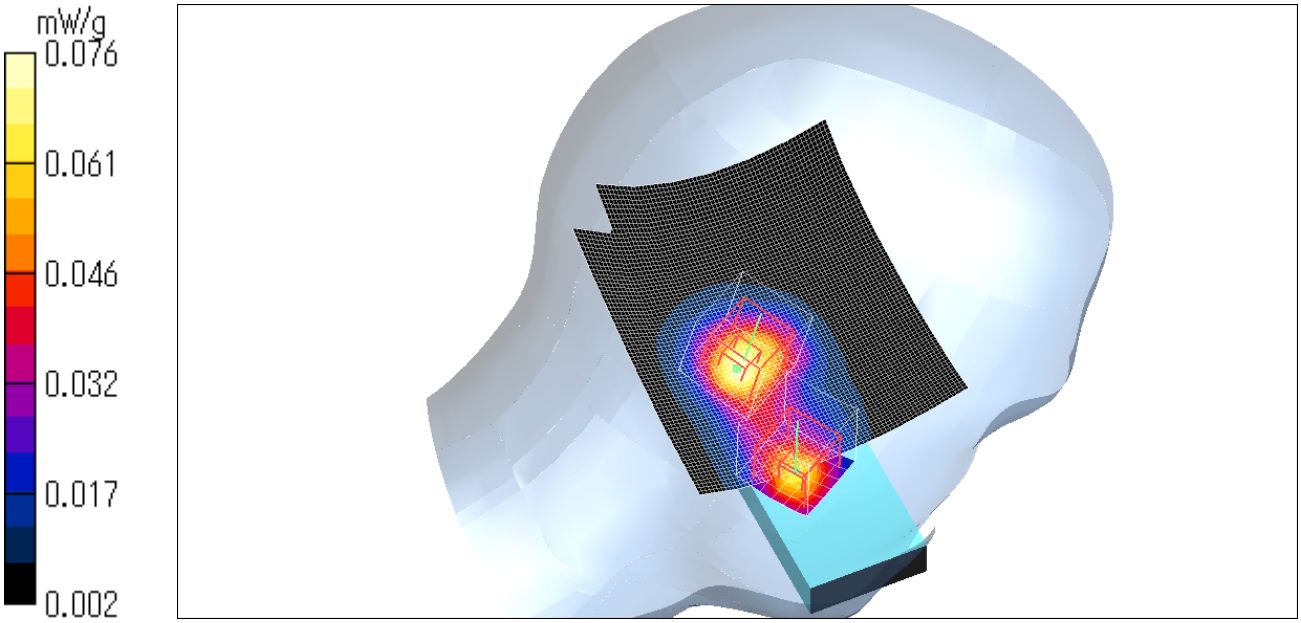

KX-WPA100(Hand Unit) / Head / Left tilt / Ant.0 / 2437MHz / 11g BPSK (6Mbps)

Crest factor: 1.1
Medium parameters used: f = 2450 MHz; σ = 1.88 mho/m; ε_r = 37.7; ρ = 1000 kg/m^3
Phantom section: Left Section
Measurement Standard: DASY4 (High Precision Assessment)

DASY4 Configuration:
Probe: EX3DV3 - SN3507; ConvF(8.26, 8.26, 8.26); Calibrated: 2006/05/26
Sensor-Surface: 2mm (Mechanical Surface Detection)
Electronics: DAE3 Sn509; Calibrated: 2006/06/15
Phantom: SAM 1196
Measurement SW: DASY4, V4.6 Build 23; Postprocessing SW: SEMCAD, V1.8 Build 160

Area Scan (71x81x1): Measurement grid: dx=15mm, dy=15mm
Maximum value of SAR (interpolated) = 0.083 mW/g

Zoom Scan (7x7x7)/Cube 0: Measurement grid: dx=5mm, dy=5mm, dz=5mm
Reference Value = 6.69 V/m; Power Drift = 0.054 dB
Peak SAR (extrapolated) = 0.114 W/kg
SAR(1 g) = 0.058 mW/g; SAR(10 g) = 0.030 mW/g
Maximum value of SAR (measured) = 0.084 mW/g

Test Date = 08/01/06
Ambient Temperature = 25.0 degree C.
Liquid Temperature = Before 24.0 degree C. , After 24.0 degree C.

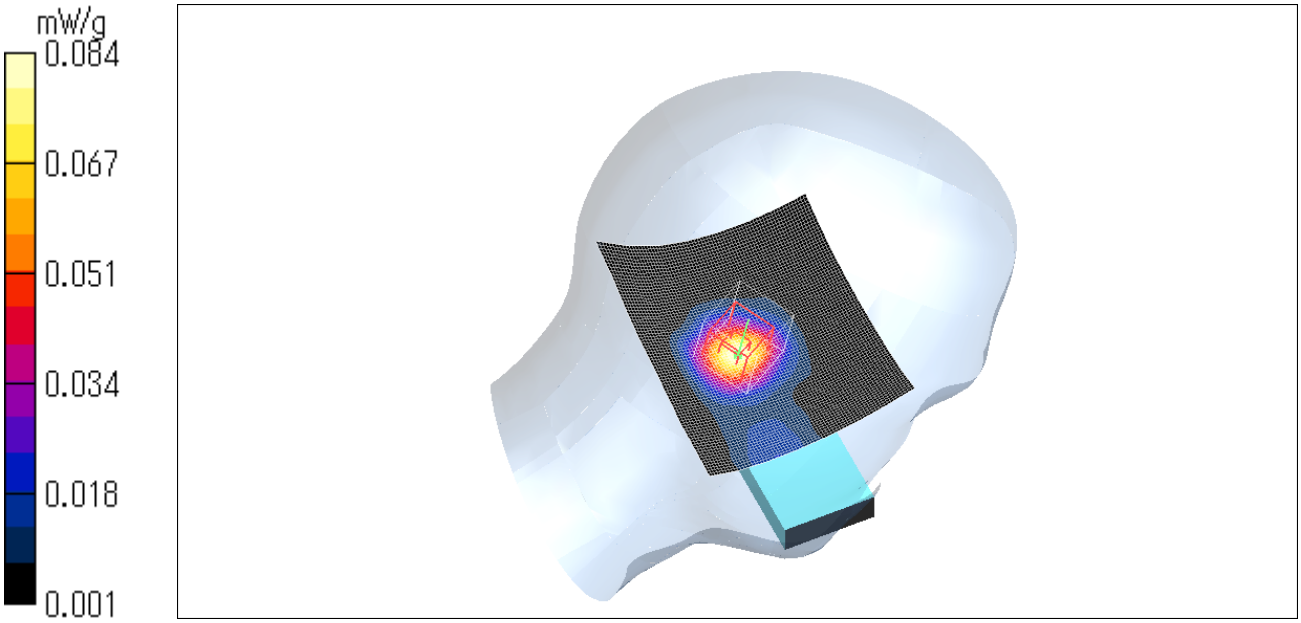

KX-WPA100(Hand Unit) / Head / Right cheek / Ant.0 / 2437MHz / 11g BPSK (6Mbps)

Crest factor: 1.1
Medium parameters used: f = 2450 MHz; σ = 1.88 mho/m; ε_r = 37.7; ρ = 1000 kg/m^3
Phantom section: Right Section
Measurement Standard: DASY4 (High Precision Assessment)

DASY4 Configuration:
Probe: EX3DV3 - SN3507; ConvF(8.26, 8.26, 8.26); Calibrated: 2006/05/26
Sensor-Surface: 2mm (Mechanical Surface Detection)
Electronics: DAE3 Sn509; Calibrated: 2006/06/15
Phantom: SAM 1196
Measurement SW: DASY4, V4.6 Build 23; Postprocessing SW: SEMCAD, V1.8 Build 160

Area Scan (71x81x1): Measurement grid: dx=15mm, dy=15mm
Maximum value of SAR (interpolated) = 0.130 mW/g

Zoom Scan (7x7x7)/Cube 0: Measurement grid: dx=5mm, dy=5mm, dz=5mm
Reference Value = 6.37 V/m; Power Drift = 0.019 dB
Peak SAR (extrapolated) = 0.167 W/kg
SAR(1 g) = 0.084 mW/g; SAR(10 g) = 0.040 mW/g
Maximum value of SAR (measured) = 0.124 mW/g

Test Date = 08/01/06
Ambient Temperature = 25.0 degree C.
Liquid Temperature = Before 24.0 degree C. , After 24.0 degree C.

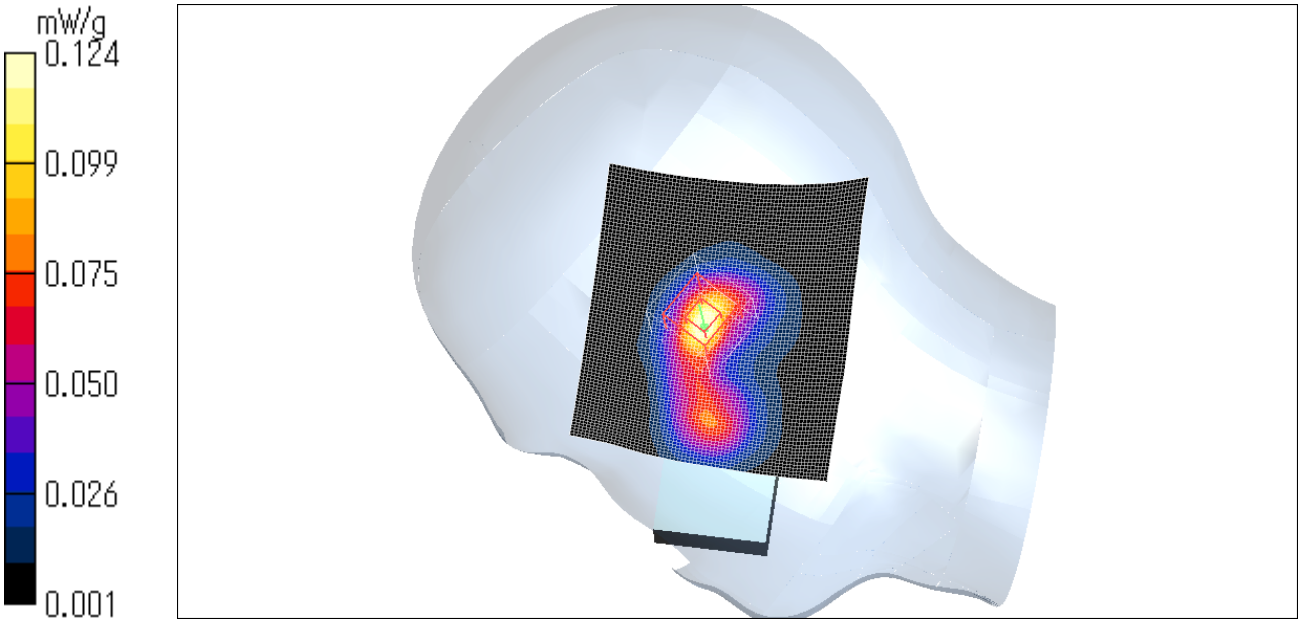

KX-WPA100(Hand Unit) / Head / Right tilt / Ant.0 / 2437MHz / 11g BPSK (6Mbps)

Crest factor: 1.1
Medium parameters used: f = 2450 MHz; σ = 1.88 mho/m; ε_r = 37.7; ρ = 1000 kg/m^3
Phantom section: Right Section
Measurement Standard: DASY4 (High Precision Assessment)

DASY4 Configuration:
Probe: EX3DV3 - SN3507; ConvF(8.26, 8.26, 8.26); Calibrated: 2006/05/26
Sensor-Surface: 2mm (Mechanical Surface Detection)
Electronics: DAE3 Sn509; Calibrated: 2006/06/15
Phantom: SAM 1196
Measurement SW: DASY4, V4.6 Build 23; Postprocessing SW: SEMCAD, V1.8 Build 160

Area Scan (71x81x1): Measurement grid: dx=15mm, dy=15mm
Maximum value of SAR (interpolated) = 0.109 mW/g

Zoom Scan (7x7x7)/Cube 0: Measurement grid: dx=5mm, dy=5mm, dz=5mm
Reference Value = 6.85 V/m; Power Drift = 0.112 dB
Peak SAR (extrapolated) = 0.138 W/kg
SAR(1 g) = 0.071 mW/g; SAR(10 g) = 0.036 mW/g
Maximum value of SAR (measured) = 0.105 mW/g

Test Date = 08/01/06
Ambient Temperature = 25.0 degree C.
Liquid Temperature = Before 24.0 degree C. , After 24.0 degree C.

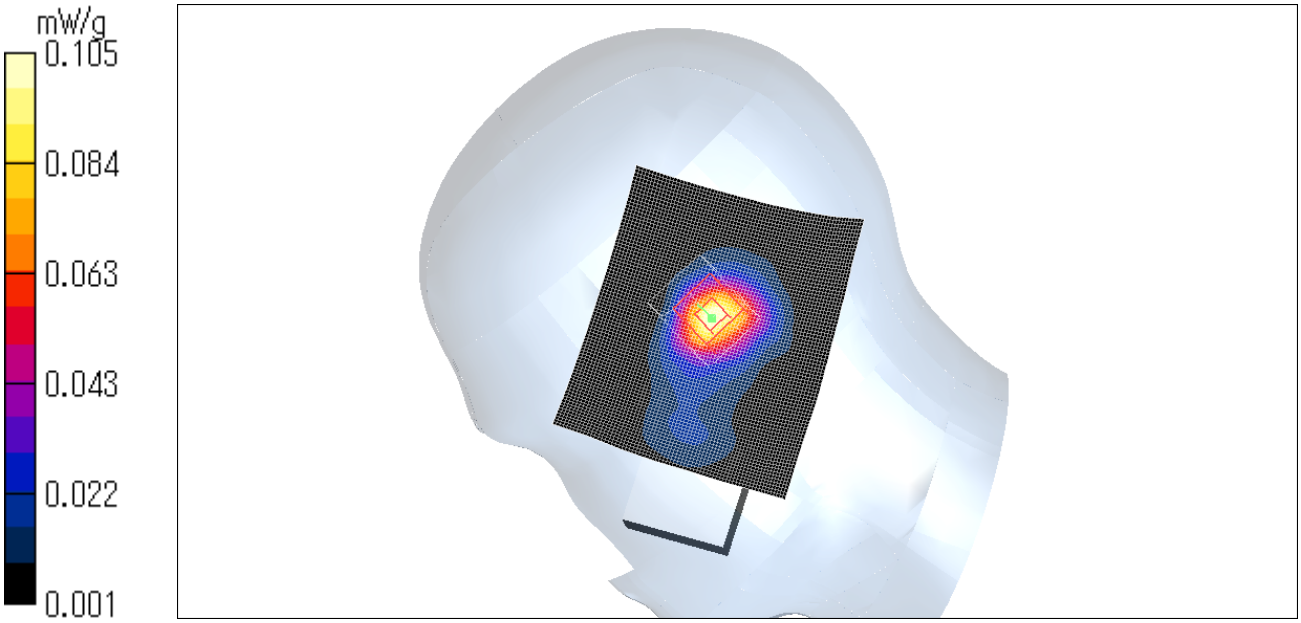

KX-WPA100(Hand Unit) / Head / Right cheek / Ant.0 / 2437MHz / 11g QPSK (12Mbps)

Crest factor: 1.5
Medium parameters used: f = 2450 MHz; σ = 1.88 mho/m; ε_r = 37.7; ρ = 1000 kg/m^3
Phantom section: Right Section
Measurement Standard: DASY4 (High Precision Assessment)

DASY4 Configuration:
Probe: EX3DV3 - SN3507; ConvF(8.26, 8.26, 8.26); Calibrated: 2006/05/26
Sensor-Surface: 2mm (Mechanical Surface Detection)
Electronics: DAE3 Sn509; Calibrated: 2006/06/15
Phantom: SAM 1196
Measurement SW: DASY4, V4.6 Build 23; Postprocessing SW: SEMCAD, V1.8 Build 160

Area Scan (71x81x1): Measurement grid: dx=15mm, dy=15mm
Maximum value of SAR (interpolated) = 0.089 mW/g

Zoom Scan (7x7x7)/Cube 0: Measurement grid: dx=5mm, dy=5mm, dz=5mm
Reference Value = 5.11 V/m; Power Drift = -0.006 dB
Peak SAR (extrapolated) = 0.118 W/kg
SAR(1 g) = 0.060 mW/g; SAR(10 g) = 0.029 mW/g
Maximum value of SAR (measured) = 0.088 mW/g
Zoom Scan (7x7x7)/Cube 1: Measurement grid: dx=5mm, dy=5mm, dz=5mm
Reference Value = 5.11 V/m; Power Drift = -0.006 dB
Peak SAR (extrapolated) = 0.075 W/kg
SAR(1 g) = 0.044 mW/g; SAR(10 g) = 0.024 mW/g
Maximum value of SAR (measured) = 0.060 mW/g

Test Date = 08/01/06
Ambient Temperature = 25.0 degree C.
Liquid Temperature = Before 24.0 degree C. , After 24.0 degree C.

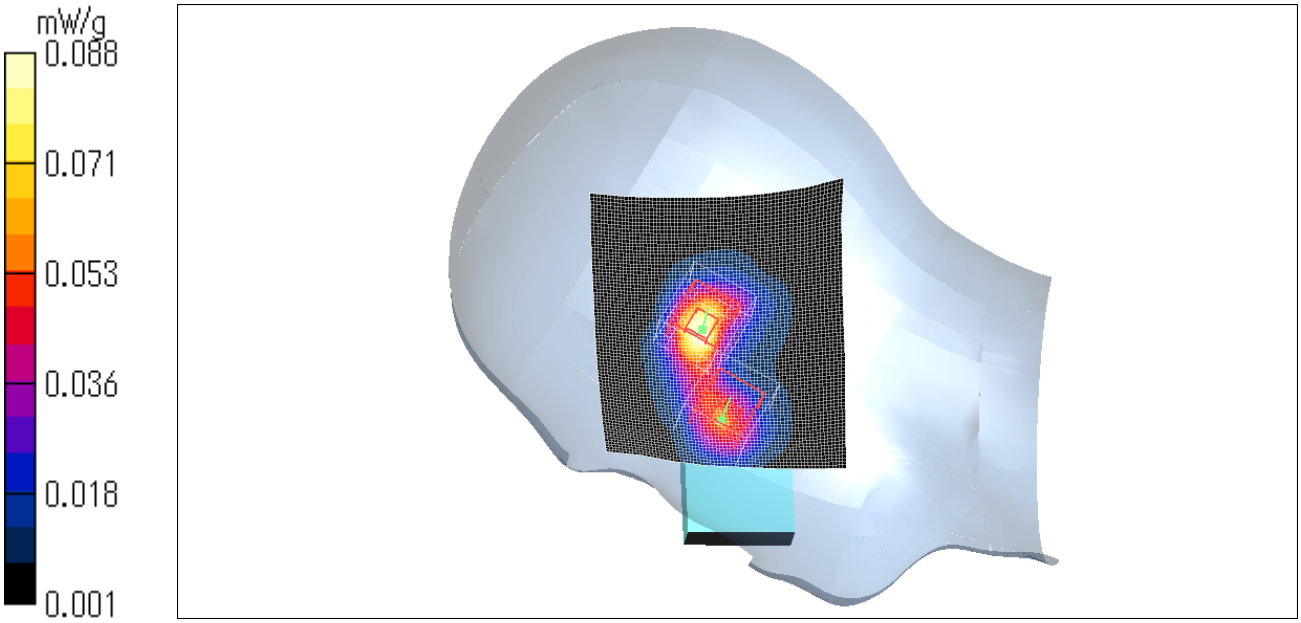

KX-WPA100(Hand Unit) / Head / Right cheek / Ant.0 / 2437MHz / 11g 16QAM (24Mbps)

Crest factor: 2.6
Medium parameters used: f = 2450 MHz; σ = 1.88 mho/m; ε_r = 37.7; ρ = 1000 kg/m^3
Phantom section: Right Section
Measurement Standard: DASY4 (High Precision Assessment)
DASY4 Configuration:
Probe: EX3DV3 - SN3507; ConvF(8.26, 8.26, 8.26); Calibrated: 2006/05/26
Sensor-Surface: 2mm (Mechanical Surface Detection)
Electronics: DAE3 Sn509; Calibrated: 2006/06/15
Phantom: SAM 1196
Measurement SW: DASY4, V4.6 Build 23; Postprocessing SW: SEMCAD, V1.8 Build 160

Area Scan (71x81x1): Measurement grid: dx=15mm, dy=15mm
Maximum value of SAR (interpolated) = 0.044 mW/g

Zoom Scan (7x7x7)/Cube 0: Measurement grid: dx=5mm, dy=5mm, dz=5mm
Reference Value = 3.66 V/m; Power Drift = -0.088 dB
Peak SAR (extrapolated) = 0.055 W/kg
SAR(1 g) = 0.030 mW/g; SAR(10 g) = 0.014 mW/g
Maximum value of SAR (measured) = 0.043 mW/g
Zoom Scan (7x7x7)/Cube 1: Measurement grid: dx=5mm, dy=5mm, dz=5mm
Reference Value = 3.66 V/m; Power Drift = -0.088 dB
Peak SAR (extrapolated) = 0.038 W/kg
SAR(1 g) = 0.022 mW/g; SAR(10 g) = 0.011 mW/g
Maximum value of SAR (measured) = 0.030 mW/g

Test Date = 08/01/06
Ambient Temperature = 25.0 degree C.
Liquid Temperature = Before 24.0 degree C. , After 24.0 degree C.

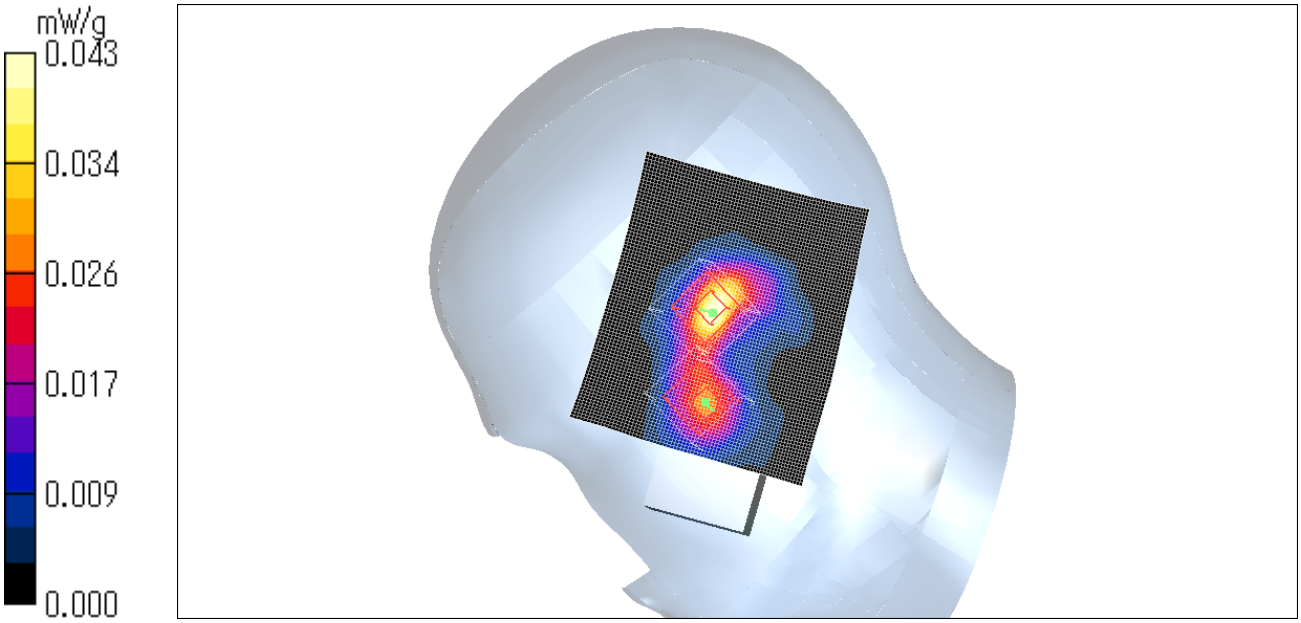

KX-WPA100(Hand Unit) / Head / Right cheek / Ant.0 / 2437MHz / 11g 64QAM (48Mbps)

Crest factor: 5.7
Medium parameters used: f = 2450 MHz; σ = 1.88 mho/m; ε_r = 37.7; ρ = 1000 kg/m^3
Phantom section: Right Section
Measurement Standard: DASY4 (High Precision Assessment)

DASY4 Configuration:
Probe: EX3DV3 - SN3507; ConvF(8.26, 8.26, 8.26); Calibrated: 2006/05/26
Sensor-Surface: 2mm (Mechanical Surface Detection)
Electronics: DAE3 Sn509; Calibrated: 2006/06/15
Phantom: SAM 1196
Measurement SW: DASY4, V4.6 Build 23; Postprocessing SW: SEMCAD, V1.8 Build 160

Area Scan (71x81x1): Measurement grid: dx=15mm, dy=15mm
Maximum value of SAR (interpolated) = 0.024 mW/g

Zoom Scan (7x7x7)/Cube 0: Measurement grid: dx=5mm, dy=5mm, dz=5mm
Reference Value = 2.41 V/m; Power Drift = 0.203 dB
Peak SAR (extrapolated) = 0.029 W/kg
SAR(1 g) = 0.014 mW/g; SAR(10 g) = 0.00665 mW/g

Zoom Scan (7x7x7)/Cube 1: Measurement grid: dx=5mm, dy=5mm, dz=5mm
Reference Value = 2.41 V/m; Power Drift = 0.203 dB
Peak SAR (extrapolated) = 0.016 W/kg
SAR(1 g) = 0.00944 mW/g; SAR(10 g) = 0.00513 mW/g
Maximum value of SAR (measured) = 0.013 mW/g
Maximum value of SAR (measured) = 0.022 mW/g

Test Date = 08/01/06
Ambient Temperature = 25.0 degree C.
Liquid Temperature = Before 24.0 degree C. , After 24.0 degree C.

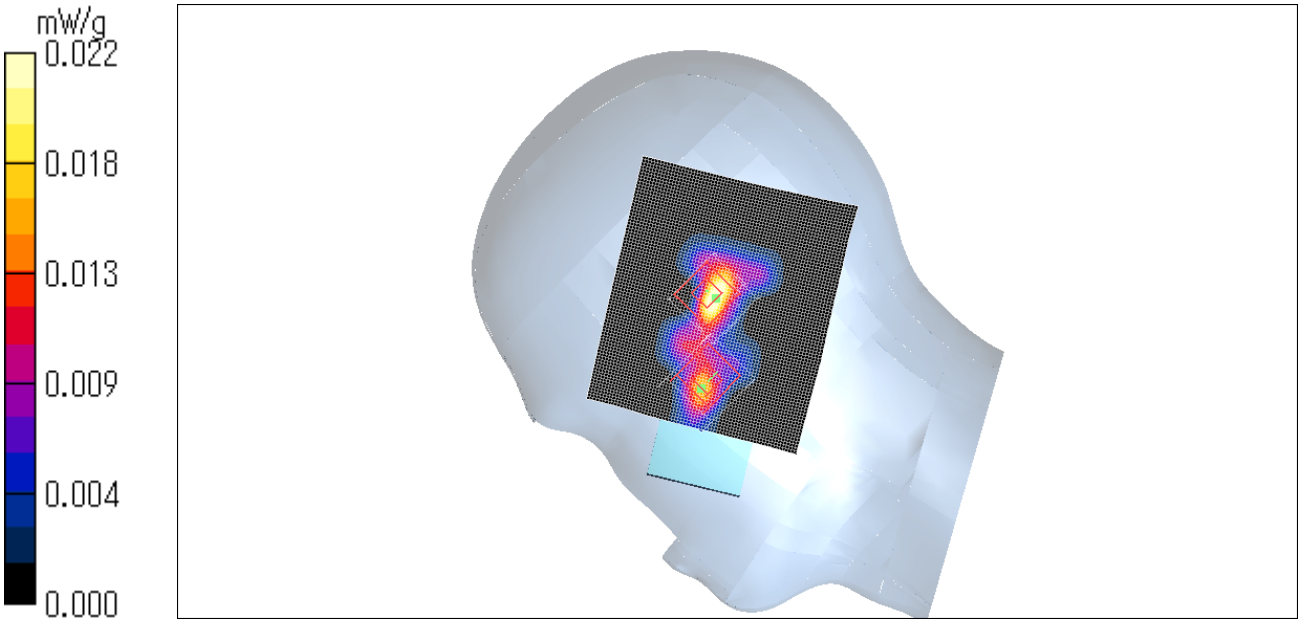

KX-WPA100(Hand Unit) / Head / Right cheek / Ant.0 / 2412MHz / 11g BPSK (6Mbps)

Crest factor: 1.1
Medium parameters used: f = 2450 MHz; σ = 1.88 mho/m; ε_r = 37.7; ρ = 1000 kg/m^3
Phantom section: Right Section
Measurement Standard: DASY4 (High Precision Assessment)

DASY4 Configuration:
Probe: EX3DV3 - SN3507; ConvF(8.26, 8.26, 8.26); Calibrated: 2006/05/26
Sensor-Surface: 2mm (Mechanical Surface Detection)
Electronics: DAE3 Sn509; Calibrated: 2006/06/15
Phantom: SAM 1196
Measurement SW: DASY4, V4.6 Build 23; Postprocessing SW: SEMCAD, V1.8 Build 160

Area Scan (71x81x1): Measurement grid: dx=15mm, dy=15mm
Maximum value of SAR (interpolated) = 0.093 mW/g

Zoom Scan (7x7x7)/Cube 0: Measurement grid: dx=5mm, dy=5mm, dz=5mm
Reference Value = 6.02 V/m; Power Drift = 0.110 dB
Peak SAR (extrapolated) = 0.124 W/kg
SAR(1 g) = 0.064 mW/g; SAR(10 g) = 0.031 mW/g

Zoom Scan (7x7x7)/Cube 1: Measurement grid: dx=5mm, dy=5mm, dz=5mm
Reference Value = 6.02 V/m; Power Drift = 0.110 dB
Peak SAR (extrapolated) = 0.094 W/kg
SAR(1 g) = 0.056 mW/g; SAR(10 g) = 0.030 mW/g
Maximum value of SAR (measured) = 0.076 mW/g

Maximum value of SAR (measured) = 0.094 mW/g
Test Date = 08/01/06
Ambient Temperature = 25.0 degree C.
Liquid Temperature = Before 24.0 degree C. , After 24.0 degree C.

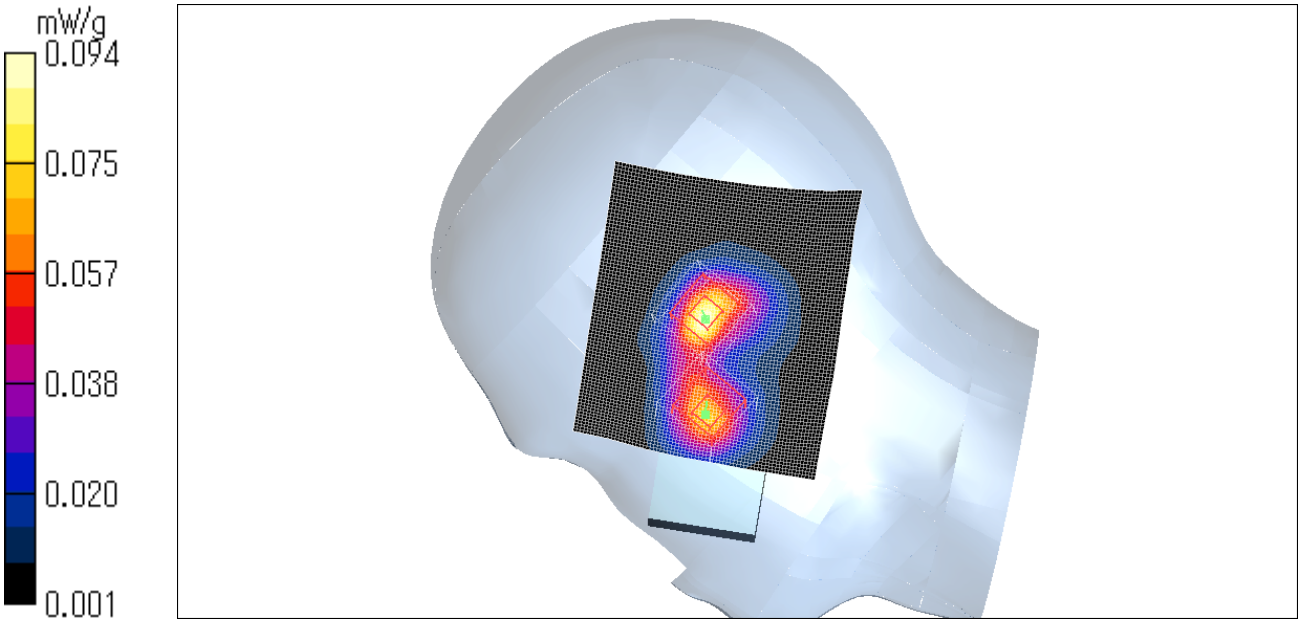

KX-WPA100(Hand Unit) / Head / Right cheek / Ant.0 / 2462MHz / 11g BPSK (6Mbps)

Crest factor: 1.1
Medium parameters used: f = 2450 MHz; σ = 1.88 mho/m; ε_r = 37.7; ρ = 1000 kg/m^3
Phantom section: Right Section
Measurement Standard: DASY4 (High Precision Assessment)

DASY4 Configuration:
Probe: EX3DV3 - SN3507; ConvF(8.26, 8.26, 8.26); Calibrated: 2006/05/26
Sensor-Surface: 2mm (Mechanical Surface Detection)
Electronics: DAE3 Sn509; Calibrated: 2006/06/15
Phantom: SAM 1196
Measurement SW: DASY4, V4.6 Build 23; Postprocessing SW: SEMCAD, V1.8 Build 160

Area Scan (71x81x1): Measurement grid: dx=15mm, dy=15mm
Maximum value of SAR (interpolated) = 0.117 mW/g

Zoom Scan (7x7x7)/Cube 0: Measurement grid: dx=5mm, dy=5mm, dz=5mm
Reference Value = 5.80 V/m; Power Drift = 0.164 dB
Peak SAR (extrapolated) = 0.150 W/kg
SAR(1 g) = 0.078 mW/g; SAR(10 g) = 0.037 mW/g
Maximum value of SAR (measured) = 0.115 mW/g
Test Date = 08/01/06
Ambient Temperature = 25.0 degree C.
Liquid Temperature = Before 23.7 degree C. , After 23.7 degree C.

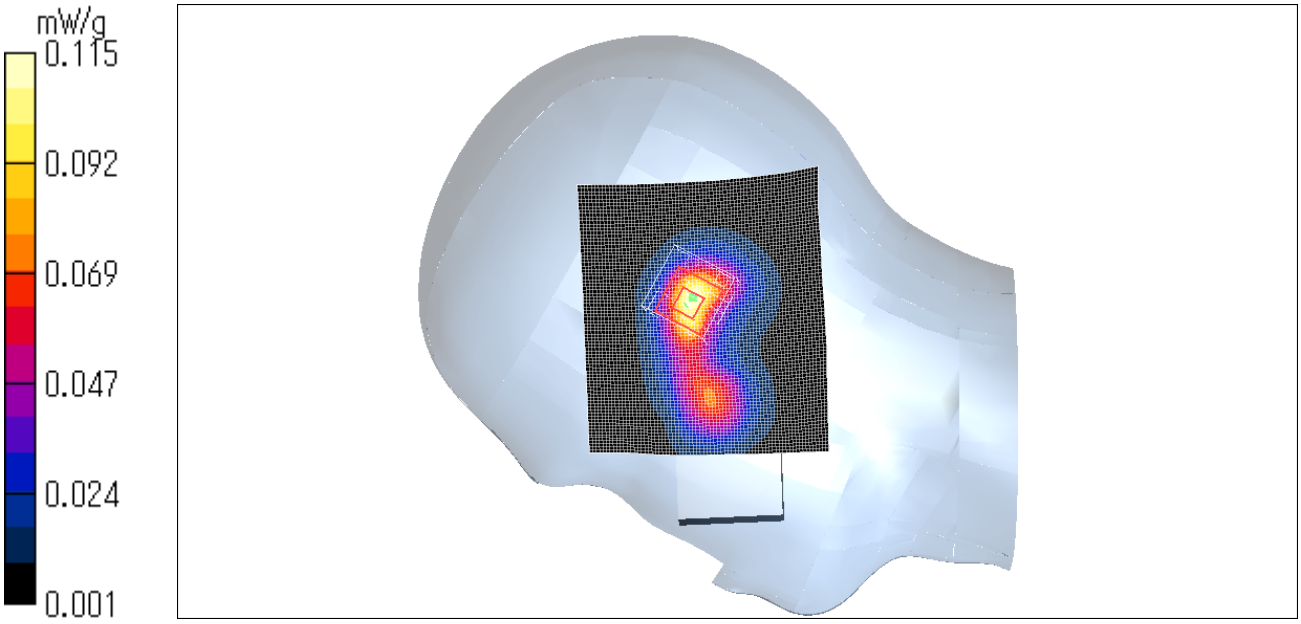

3. Body measurement data of ANT.0

KX-WPA100(Hand Unit) / Body / Front / Ant.0 / 2437MHz / 11b DBPSK (1Mbps)

Crest factor: 1
Medium parameters used: f = 2450 MHz; σ = 1.97 mho/m; ε_r = 50.3; ρ = 1000 kg/m^3
Phantom section: Flat Section
Measurement Standard: DASY4 (High Precision Assessment)

DASY4 Configuration:
Probe: EX3DV3 - SN3507; ConvF(8.24, 8.24, 8.24); Calibrated: 2006/05/26
Sensor-Surface: 2mm (Mechanical Surface Detection)
Electronics: DAE3 Sn509; Calibrated: 2006/06/15
Phantom: SAM 1196
Measurement SW: DASY4, V4.6 Build 23; Postprocessing SW: SEMCAD, V1.8 Build 160

Area Scan (81x91x1): Measurement grid: dx=15mm, dy=15mm
Maximum value of SAR (interpolated) = 0.293 mW/g

Zoom Scan (7x7x7)/Cube 0: Measurement grid: dx=5mm, dy=5mm, dz=5mm
Reference Value = 10.9 V/m; Power Drift = 0.144 dB
Peak SAR (extrapolated) = 0.377 W/kg
SAR(1 g) = 0.194 mW/g; SAR(10 g) = 0.091 mW/g
Maximum value of SAR (measured) = 0.290 mW/g

Test Date = 08/01/06
Ambient Temperature = 25.0 degree C.
Liquid Temperature = Before 24.0 degree C. , After 24.0 degree C.

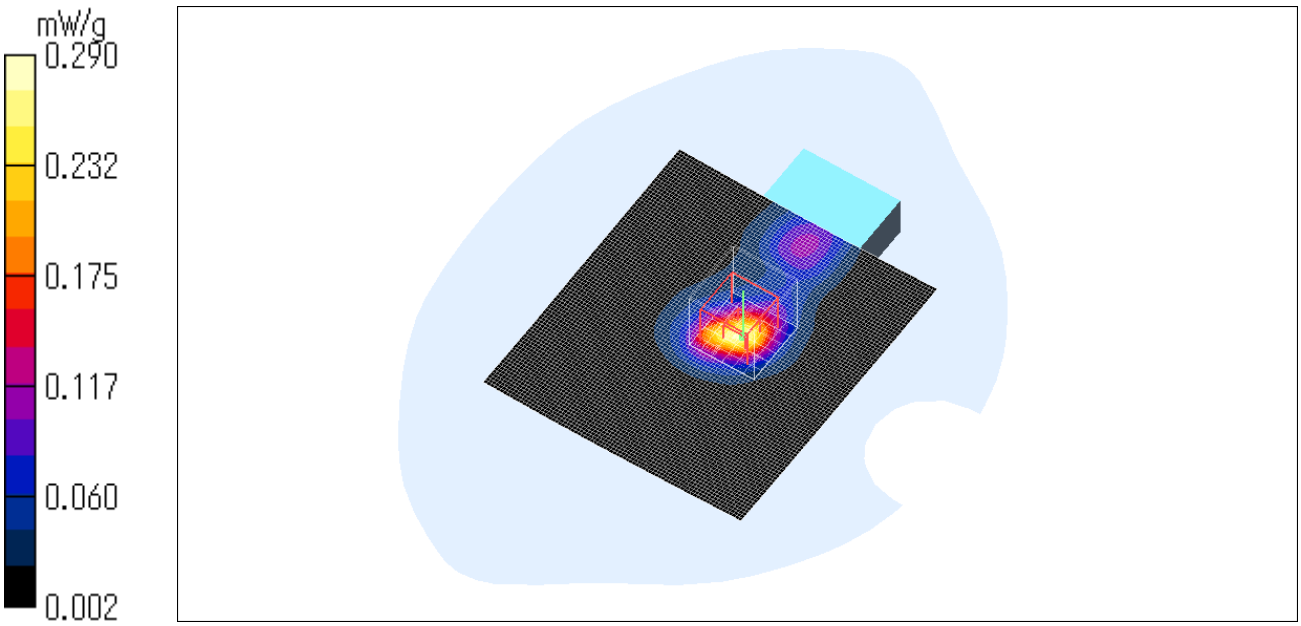

KX-WPA100(Hand Unit) / Body / Back / Ant.0 / 2437MHz / 11b DBPSK (1Mbps)

Crest factor: 1
Medium parameters used: f = 2450 MHz; σ = 1.97 mho/m; ε_r = 50.3; ρ = 1000 kg/m^3
Phantom section: Flat Section
Measurement Standard: DASY4 (High Precision Assessment)

DASY4 Configuration:
Probe: EX3DV3 - SN3507; ConvF(8.24, 8.24, 8.24); Calibrated: 2006/05/26
Sensor-Surface: 2mm (Mechanical Surface Detection)
Electronics: DAE3 Sn509; Calibrated: 2006/06/15
Phantom: SAM 1196
Measurement SW: DASY4, V4.6 Build 23; Postprocessing SW: SEMCAD, V1.8 Build 160

Area Scan (81x91x1): Measurement grid: dx=15mm, dy=15mm
Maximum value of SAR (interpolated) = 1.00 mW/g

Zoom Scan (7x7x7)/Cube 0: Measurement grid: dx=5mm, dy=5mm, dz=5mm
Reference Value = 14.8 V/m; Power Drift = 0.088 dB
Peak SAR (extrapolated) = 2.01 W/kg
SAR(1 g) = 0.700 mW/g; SAR(10 g) = 0.282 mW/g
Maximum value of SAR (measured) = 1.21 mW/g

Test Date = 08/01/06
Ambient Temperature = 25.0 degree C.
Liquid Temperature = Before 24.0 degree C. , After 24.0 degree C.

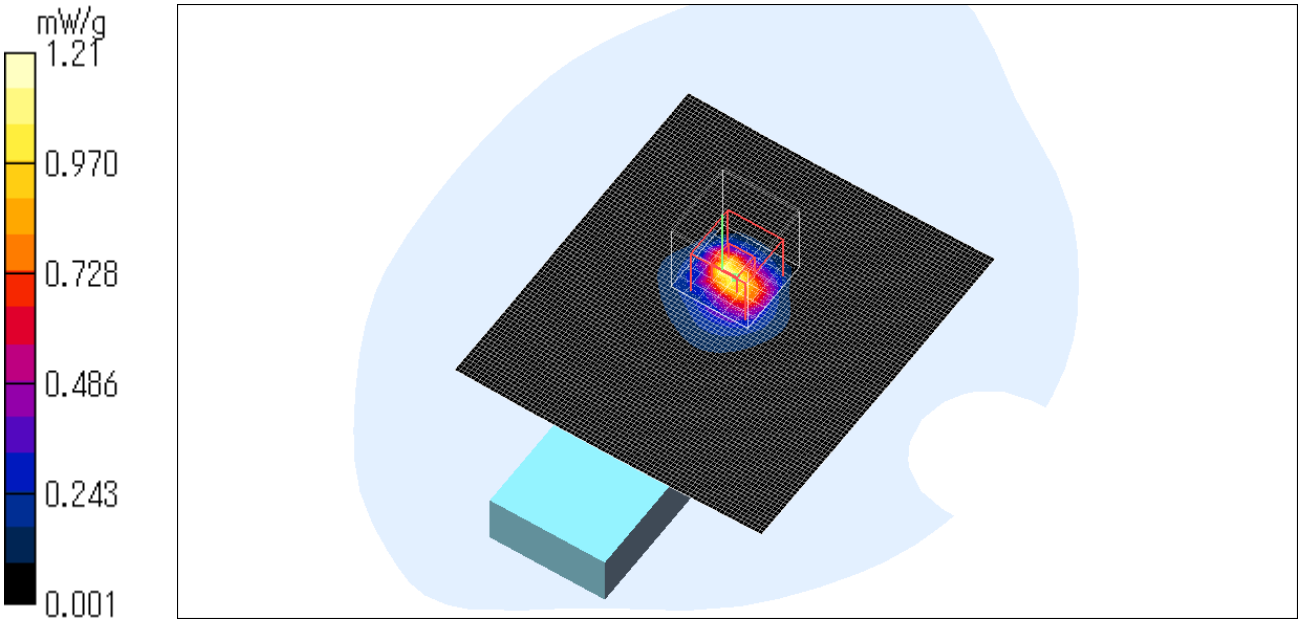

KX-WPA100(Hand Unit) / Body / Back / Ant.0 / 2437MHz / 11b CCK (11Mbps)

Crest factor: 1.2
Medium parameters used: f = 2450 MHz; σ = 1.97 mho/m; ε_r = 50.3; ρ = 1000 kg/m^3
Phantom section: Flat Section
Measurement Standard: DASY4 (High Precision Assessment)

DASY4 Configuration:
Probe: EX3DV3 - SN3507; ConvF(8.24, 8.24, 8.24); Calibrated: 2006/05/26
Sensor-Surface: 2mm (Mechanical Surface Detection)
Electronics: DAE3 Sn509; Calibrated: 2006/06/15
Phantom: SAM 1196
Measurement SW: DASY4, V4.6 Build 23; Postprocessing SW: SEMCAD, V1.8 Build 160

Area Scan (81x91x1): Measurement grid: dx=15mm, dy=15mm
Maximum value of SAR (interpolated) = 0.992 mW/g

Zoom Scan (7x7x7)/Cube 0: Measurement grid: dx=5mm, dy=5mm, dz=5mm
Reference Value = 10.1 V/m; Power Drift = -0.139 dB
Peak SAR (extrapolated) = 1.73 W/kg
SAR(1 g) = 0.612 mW/g; SAR(10 g) = 0.252 mW/g
Maximum value of SAR (measured) = 1.09 mW/g

Test Date = 08/01/06
Ambient Temperature = 25.0 degree C.
Liquid Temperature = Before 24.0 degree C. , After 24.0 degree C.

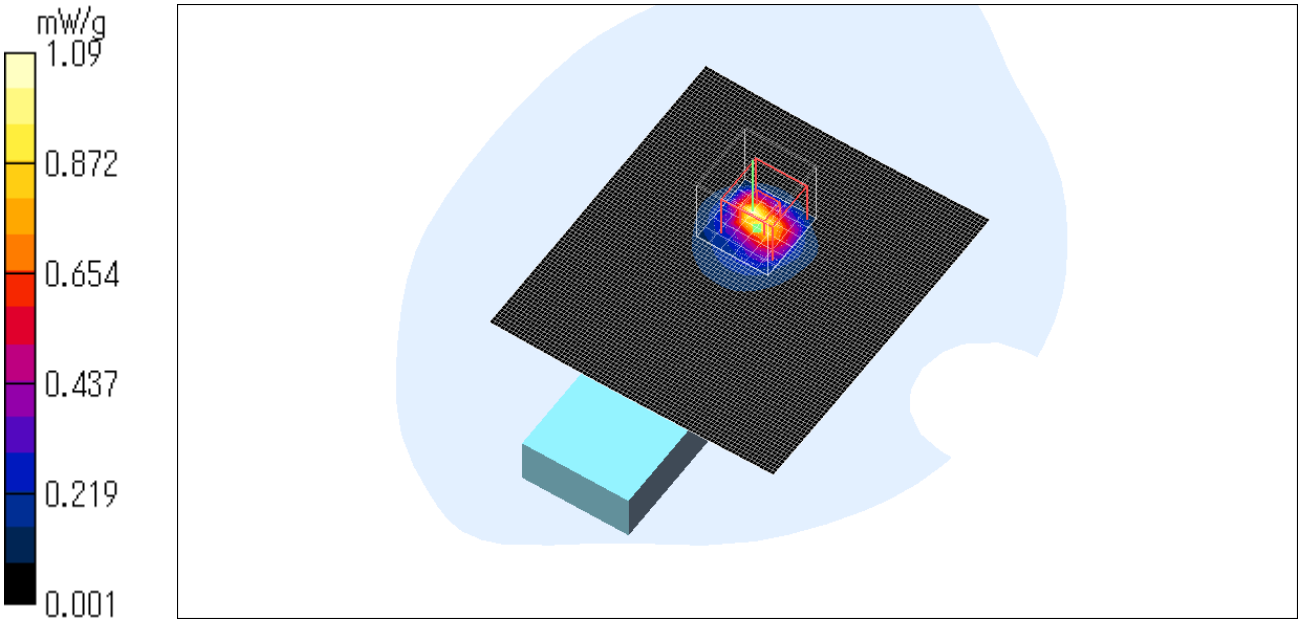

KX-WPA100(Hand Unit) / Body / Back / Ant.0 / 2412MHz / 11b DBPSK (1Mbps)

Crest factor: 1
Medium parameters used: f = 2450 MHz; σ = 1.97 mho/m; ε_r = 50.3; ρ = 1000 kg/m^3
Phantom section: Flat Section
Measurement Standard: DASY4 (High Precision Assessment)

DASY4 Configuration:
Probe: EX3DV3 - SN3507; ConvF(8.24, 8.24, 8.24); Calibrated: 2006/05/26
Sensor-Surface: 2mm (Mechanical Surface Detection)
Electronics: DAE3 Sn509; Calibrated: 2006/06/15
Phantom: SAM 1196
Measurement SW: DASY4, V4.6 Build 23; Postprocessing SW: SEMCAD, V1.8 Build 160

Area Scan (81x91x1): Measurement grid: dx=15mm, dy=15mm
Maximum value of SAR (interpolated) = 1.05 mW/g

Zoom Scan (7x7x7)/Cube 0: Measurement grid: dx=5mm, dy=5mm, dz=5mm
Reference Value = 10.8 V/m; Power Drift = -0.149 dB
Peak SAR (extrapolated) = 1.66 W/kg
SAR(1 g) = 0.591 mW/g; SAR(10 g) = 0.249 mW/g
Maximum value of SAR (measured) = 1.05 mW/g

Test Date = 08/01/06
Ambient Temperature = 25.0 degree C.
Liquid Temperature = Before 24.0 degree C. , After 24.0 degree C.

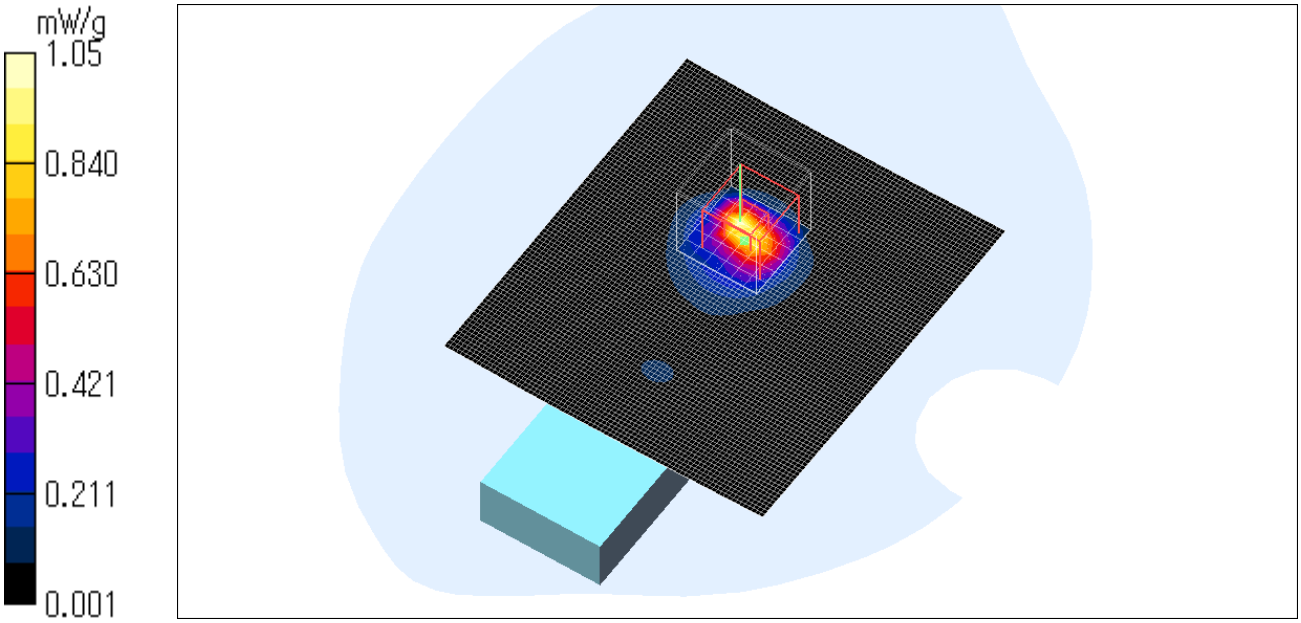

KX-WPA100(Hand Unit) / Body / Back / Ant.0 / 2462MHz / 11b DBPSK (1Mbps)

Crest factor: 1
Medium parameters used: f = 2450 MHz; σ = 1.97 mho/m; ε_r = 50.3; ρ = 1000 kg/m^3
Phantom section: Flat Section
Measurement Standard: DASY4 (High Precision Assessment)

DASY4 Configuration:
Probe: EX3DV3 - SN3507; ConvF(8.24, 8.24, 8.24); Calibrated: 2006/05/26
Sensor-Surface: 2mm (Mechanical Surface Detection)
Electronics: DAE3 Sn509; Calibrated: 2006/06/15
Phantom: SAM 1196
Measurement SW: DASY4, V4.6 Build 23; Postprocessing SW: SEMCAD, V1.8 Build 160

Area Scan (81x91x1): Measurement grid: dx=15mm, dy=15mm
Maximum value of SAR (interpolated) = 1.54 mW/g

Zoom Scan (7x7x7)/Cube 0: Measurement grid: dx=5mm, dy=5mm, dz=5mm
Reference Value = 15.4 V/m; Power Drift = -0.082 dB
Peak SAR (extrapolated) = 2.44 W/kg
SAR(1 g) = 0.887 mW/g; SAR(10 g) = 0.360 mW/g
Maximum value of SAR (measured) = 1.56 mW/g

Test Date = 08/01/06
Ambient Temperature = 25.0 degree C.
Liquid Temperature = Before 24.0 degree C. , After 24.0 degree C.

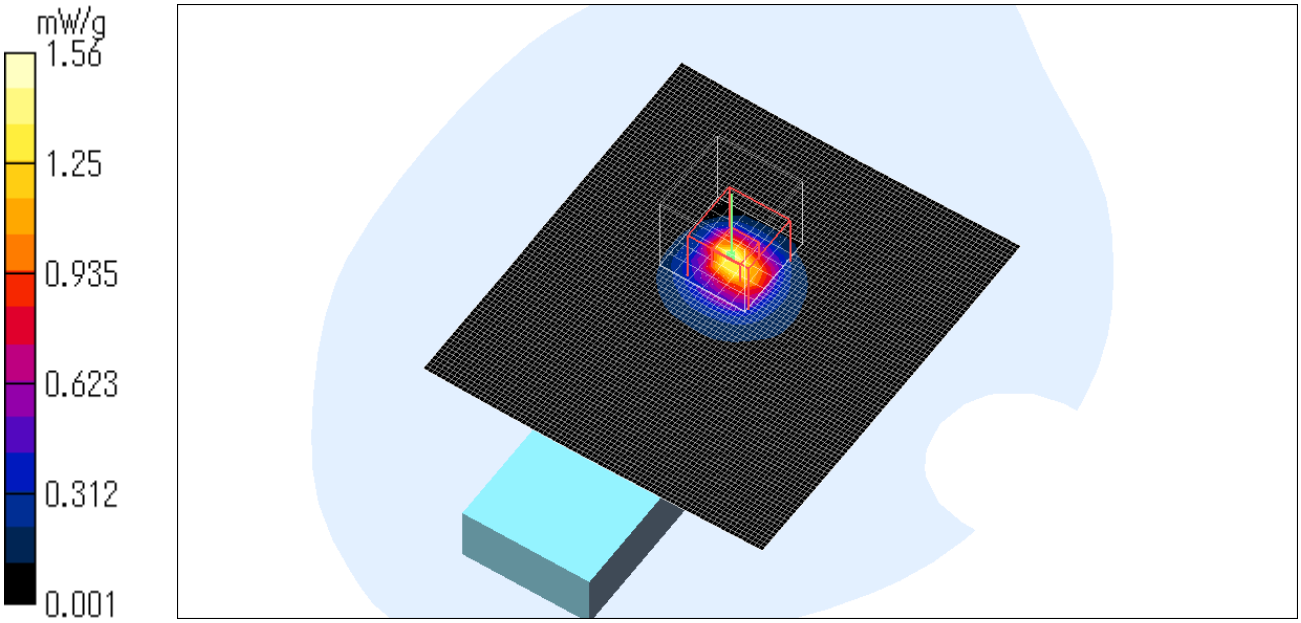

Z-axis scan at max SAR location

KX-WPA100(Hand Unit) / Body / Back / Ant.0 / 2462MHz / 11b DBPSK (1Mbps)

Crest factor: 1
Medium parameters used: f = 2450 MHz; σ = 1.97 mho/m; ε_r = 50.3; ρ = 1000 kg/m^3
Phantom section: Flat Section
Measurement Standard: DASY4 (High Precision Assessment)

DASY4 Configuration:
Probe: EX3DV3 - SN3507; ConvF(8.24, 8.24, 8.24); Calibrated: 2006/05/26
Sensor-Surface: 2mm (Mechanical Surface Detection)
Electronics: DAE3 Sn509; Calibrated: 2006/06/15
Phantom: SAM 1196
Measurement SW: DASY4, V4.6 Build 23; Postprocessing SW: SEMCAD, V1.8 Build 160

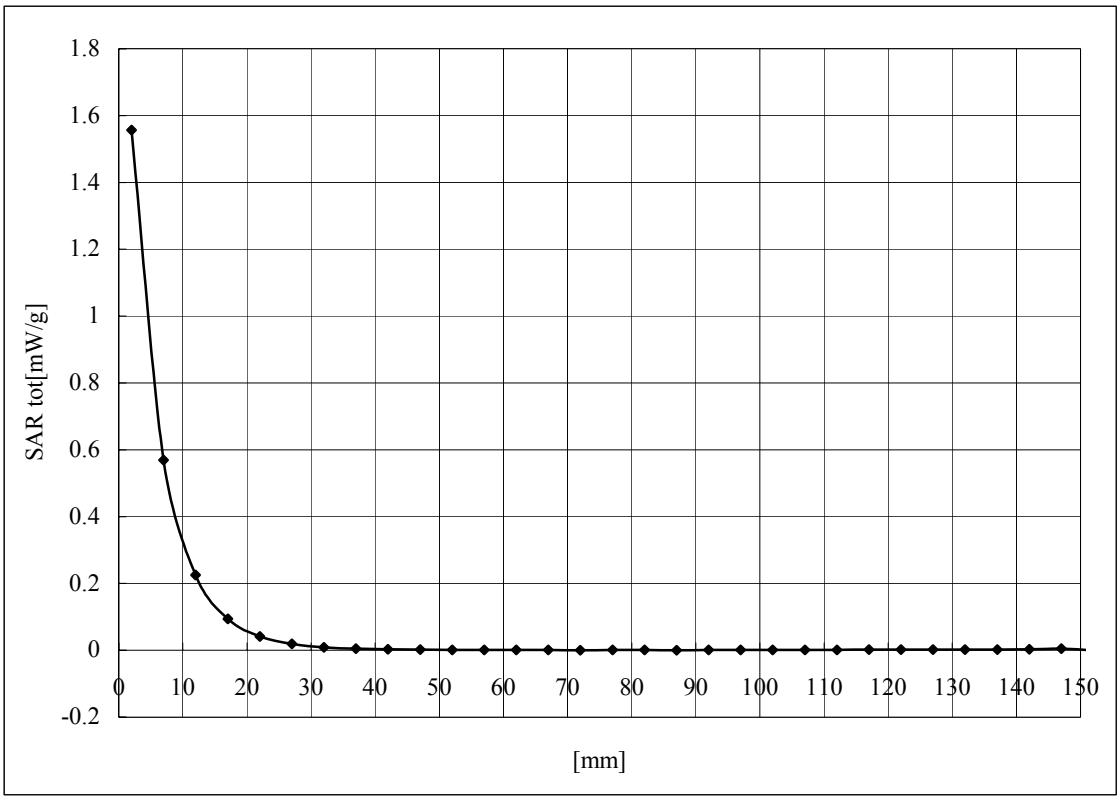

KX-WPA100(Hand Unit) / Body / Front / Ant.0 / 2437MHz / 11g BPSK (6Mbps)

Crest factor: 1.1
Medium parameters used: f = 2450 MHz; σ = 2.01 mho/m; ε_r = 50.1; ρ = 1000 kg/m^3
Phantom section: Flat Section
Measurement Standard: DASY4 (High Precision Assessment)

DASY4 Configuration:
Probe: EX3DV3 - SN3507; ConvF(8.24, 8.24, 8.24); Calibrated: 2006/05/26
Sensor-Surface: 2mm (Mechanical Surface Detection)
Electronics: DAE3 Sn509; Calibrated: 2006/06/15
Phantom: SAM 1196
Measurement SW: DASY4, V4.6 Build 23; Postprocessing SW: SEMCAD, V1.8 Build 160

Area Scan (81x91x1): Measurement grid: dx=15mm, dy=15mm
Maximum value of SAR (interpolated) = 0.166 mW/g

Zoom Scan (7x7x7)/Cube 0: Measurement grid: dx=5mm, dy=5mm, dz=5mm
Reference Value = 5.69 V/m; Power Drift = -0.141 dB
Peak SAR (extrapolated) = 0.246 W/kg
SAR(1 g) = 0.121 mW/g; SAR(10 g) = 0.057 mW/g
Maximum value of SAR (measured) = 0.179 mW/g

Test Date = 08/02/06
Ambient Temperature = 25.0 degree C.
Liquid Temperature = Before 23.9 degree C. , After 23.9 degree C.

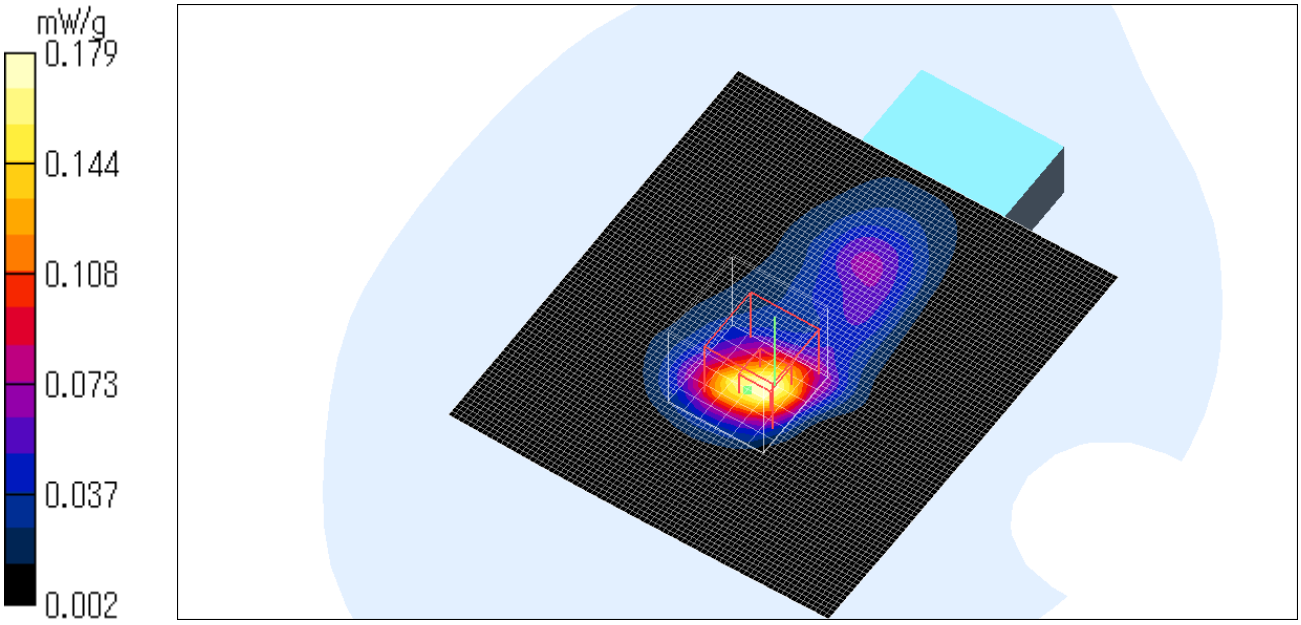

KX-WPA100(Hand Unit) / Body / Back / Ant.0 / 2437MHz / 11g BPSK (6Mbps)

Crest factor: 1.1
Medium parameters used: f = 2450 MHz; σ = 2.01 mho/m; ε_r = 50.1; ρ = 1000 kg/m^3
Phantom section: Flat Section
Measurement Standard: DASY4 (High Precision Assessment)

DASY4 Configuration:
Probe: EX3DV3 - SN3507; ConvF(8.24, 8.24, 8.24); Calibrated: 2006/05/26
Sensor-Surface: 2mm (Mechanical Surface Detection)
Electronics: DAE3 Sn509; Calibrated: 2006/06/15
Phantom: SAM 1196
Measurement SW: DASY4, V4.6 Build 23; Postprocessing SW: SEMCAD, V1.8 Build 160

Area Scan (81x91x1): Measurement grid: dx=15mm, dy=15mm
Maximum value of SAR (interpolated) = 0.712 mW/g

Zoom Scan (7x7x7)/Cube 0: Measurement grid: dx=5mm, dy=5mm, dz=5mm
Reference Value = 10.8 V/m; Power Drift = -0.110 dB
Peak SAR (extrapolated) = 1.13 W/kg
SAR(1 g) = 0.410 mW/g; SAR(10 g) = 0.167 mW/g
Maximum value of SAR (measured) = 0.722 mW/g

Test Date = 08/02/06
Ambient Temperature = 25.0 degree C.
Liquid Temperature = Before 24.0 degree C. , After 24.0 degree C.

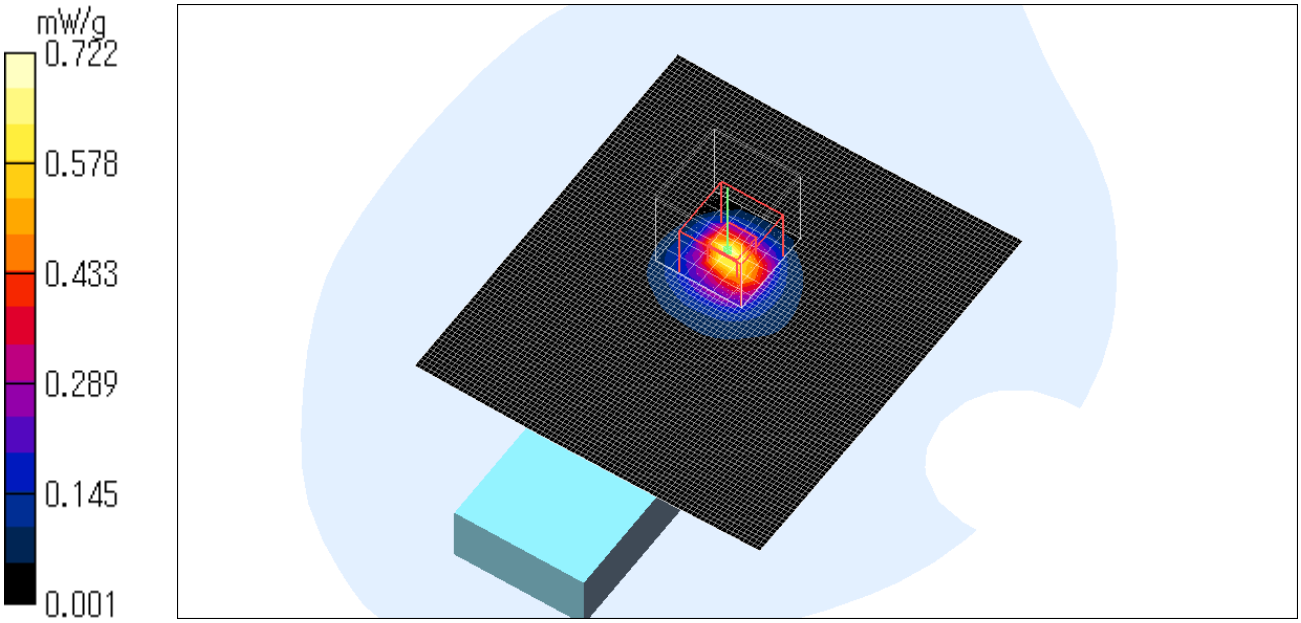

KX-WPA100(Hand Unit) / Body / Back / Ant.0 / 2437MHz / 11g QPSK (12Mbps)

Crest factor: 1.5
Medium parameters used: f = 2450 MHz; σ = 2.01 mho/m; ε_r = 50.1; ρ = 1000 kg/m^3
Phantom section: Flat Section
Measurement Standard: DASY4 (High Precision Assessment)

DASY4 Configuration:
Probe: EX3DV3 - SN3507; ConvF(8.24, 8.24, 8.24); Calibrated: 2006/05/26
Sensor-Surface: 2mm (Mechanical Surface Detection)
Electronics: DAE3 Sn509; Calibrated: 2006/06/15
Phantom: SAM 1196
Measurement SW: DASY4, V4.6 Build 23; Postprocessing SW: SEMCAD, V1.8 Build 160

Area Scan (81x91x1): Measurement grid: dx=15mm, dy=15mm
Maximum value of SAR (interpolated) = 0.513 mW/g

Zoom Scan (7x7x7)/Cube 0: Measurement grid: dx=5mm, dy=5mm, dz=5mm
Reference Value = 5.97 V/m; Power Drift = -0.221 dB
Peak SAR (extrapolated) = 0.859 W/kg
SAR(1 g) = 0.310 mW/g; SAR(10 g) = 0.126 mW/g
Maximum value of SAR (measured) = 0.532 mW/g

Test Date = 08/02/06
Ambient Temperature = 25.0 degree C.
Liquid Temperature = Before 23.9 degree C. , After 23.9 degree C.

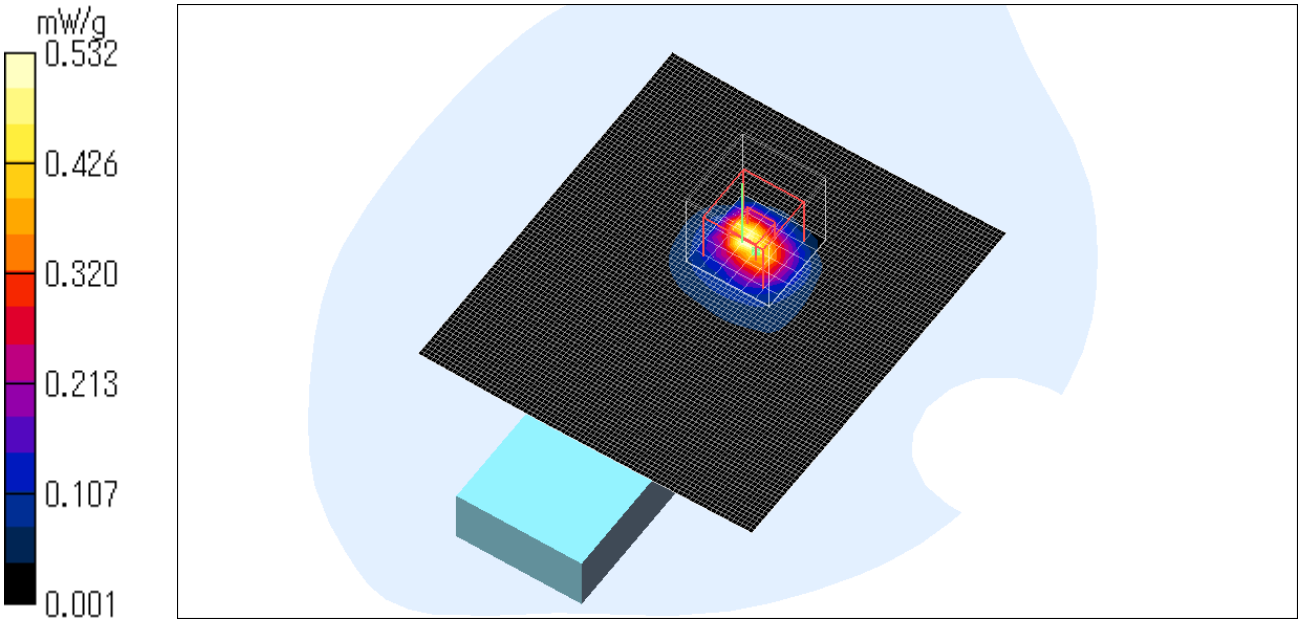

KX-WPA100(Hand Unit) / Body / Back / Ant.0 / 2437MHz / 11g 16QAM (24Mbps)

Crest factor: 2.6
Medium parameters used: f = 2450 MHz; σ = 2.01 mho/m; ε_r = 50.1; ρ = 1000 kg/m^3
Phantom section: Flat Section
Measurement Standard: DASY4 (High Precision Assessment)

DASY4 Configuration:
Probe: EX3DV3 - SN3507; ConvF(8.24, 8.24, 8.24); Calibrated: 2006/05/26
Sensor-Surface: 2mm (Mechanical Surface Detection)
Electronics: DAE3 Sn509; Calibrated: 2006/06/15
Phantom: SAM 1196
Measurement SW: DASY4, V4.6 Build 23; Postprocessing SW: SEMCAD, V1.8 Build 160

Area Scan (81x91x1): Measurement grid: dx=15mm, dy=15mm
Maximum value of SAR (interpolated) = 0.276 mW/g

Zoom Scan (7x7x7)/Cube 0: Measurement grid: dx=5mm, dy=5mm, dz=5mm
Reference Value = 4.16 V/m; Power Drift = -0.225 dB
Peak SAR (extrapolated) = 0.438 W/kg
SAR(1 g) = 0.157 mW/g; SAR(10 g) = 0.064 mW/g
Maximum value of SAR (measured) = 0.264 mW/g

Test Date = 08/02/06
Ambient Temperature = 25.0 degree C.
Liquid Temperature = Before 23.9 degree C. , After 23.9 degree C.

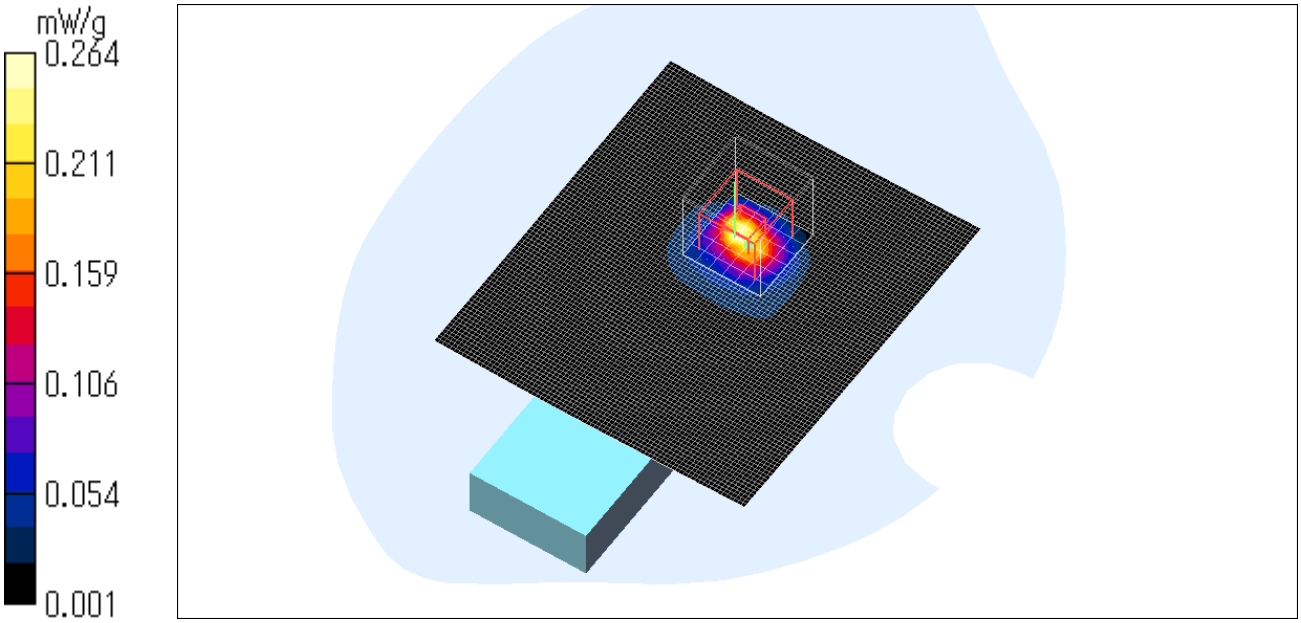

KX-WPA100(Hand Unit) / Body / Back / Ant.0 / 2437MHz / 11g 64QAM (48Mbps)

Crest factor: 5.7
Medium parameters used: f = 2450 MHz; σ = 2.01 mho/m; ε_r = 50.1; ρ = 1000 kg/m^3
Phantom section: Flat Section
Measurement Standard: DASY4 (High Precision Assessment)

DASY4 Configuration:
Probe: EX3DV3 - SN3507; ConvF(8.24, 8.24, 8.24); Calibrated: 2006/05/26
Sensor-Surface: 2mm (Mechanical Surface Detection)
Electronics: DAE3 Sn509; Calibrated: 2006/06/15
Phantom: SAM 1196
Measurement SW: DASY4, V4.6 Build 23; Postprocessing SW: SEMCAD, V1.8 Build 160

Area Scan (81x91x1): Measurement grid: dx=15mm, dy=15mm
Maximum value of SAR (interpolated) = 0.134 mW/g

Zoom Scan (7x7x7)/Cube 0: Measurement grid: dx=5mm, dy=5mm, dz=5mm
Reference Value = 2.91 V/m; Power Drift = -0.208 dB
Peak SAR (extrapolated) = 0.213 W/kg
SAR(1 g) = 0.075 mW/g; SAR(10 g) = 0.030 mW/g
Maximum value of SAR (measured) = 0.123 mW/g

Test Date = 08/02/06
Ambient Temperature = 25.0 degree C.
Liquid Temperature = Before 24.2 degree C. , After 24.2 degree C.

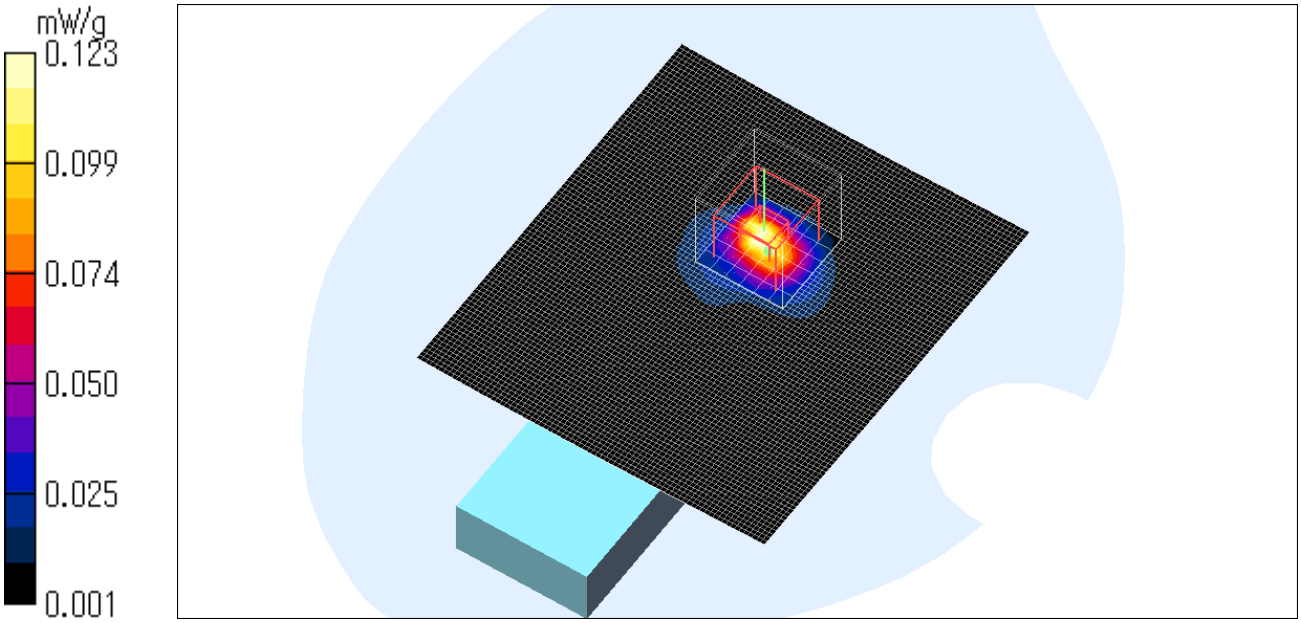

KX-WPA100(Hand Unit) / Body / Back / Ant.0 / 2412MHz / 11g BPSK (6Mbps)

Crest factor: 1.1
Medium parameters used: f = 2450 MHz; σ = 2.01 mho/m; ε_r = 50.1; ρ = 1000 kg/m^3
Phantom section: Flat Section
Measurement Standard: DASY4 (High Precision Assessment)
DASY4 Configuration:
Probe: EX3DV3 - SN3507; ConvF(8.24, 8.24, 8.24); Calibrated: 2006/05/26
Sensor-Surface: 2mm (Mechanical Surface Detection)
Electronics: DAE3 Sn509; Calibrated: 2006/06/15
Phantom: SAM 1196
Measurement SW: DASY4, V4.6 Build 23; Postprocessing SW: SEMCAD, V1.8 Build 160

Area Scan (81x91x1): Measurement grid: dx=15mm, dy=15mm
Maximum value of SAR (interpolated) = 0.544 mW/g

Zoom Scan (7x7x7)/Cube 0: Measurement grid: dx=5mm, dy=5mm, dz=5mm
Reference Value = 12.6 V/m; Power Drift = -0.012 dB
Peak SAR (extrapolated) = 1.13 W/kg
SAR(1 g) = 0.400 mW/g; SAR(10 g) = 0.171 mW/g
Maximum value of SAR (measured) = 0.665 mW/g
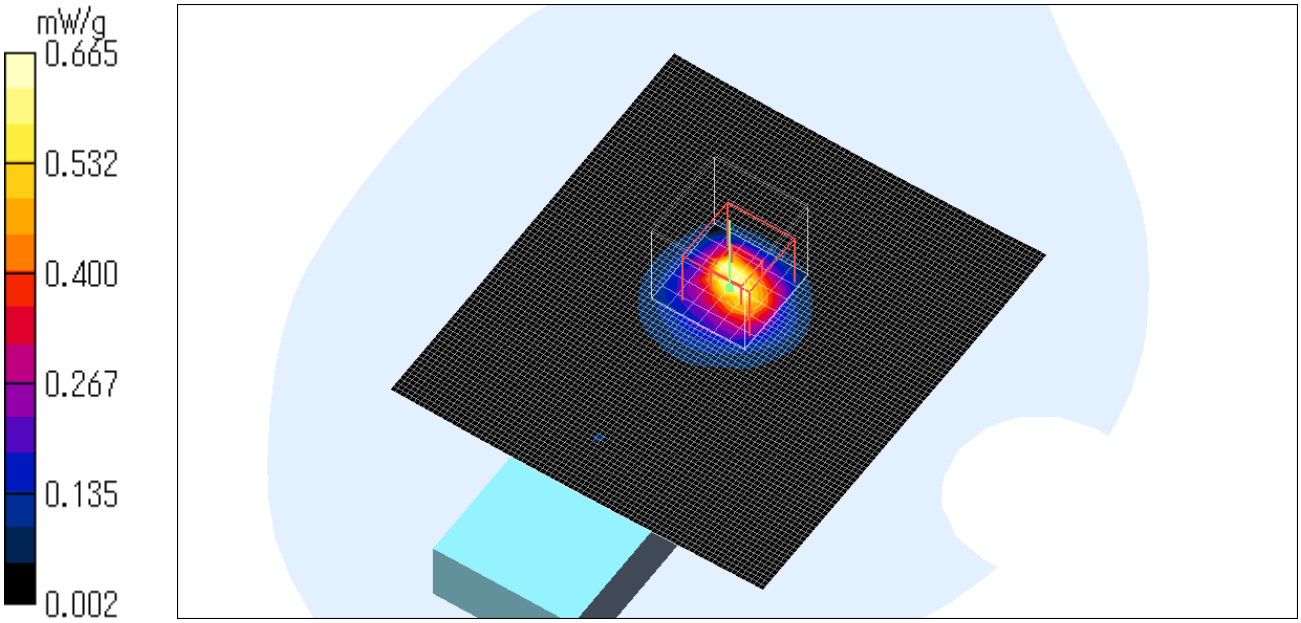
Test Date = 08/02/06
Ambient Temperature = 25.0 degree C.
Liquid Temperature = Before 23.8 degree C. , After 23.8 degree C.