KX-WPA100(Hand Unit) / Body / Back / Ant.0 / 2462MHz / 11g BPSK (6Mbps)

Crest factor: 1.1
Medium parameters used: f = 2450 MHz; σ = 2.01 mho/m; ε_r = 50.1; ρ = 1000 kg/m^3
Phantom section: Flat Section
Measurement Standard: DASY4 (High Precision Assessment)

DASY4 Configuration:
Probe: EX3DV3 - SN3507; ConvF(8.24, 8.24, 8.24); Calibrated: 2006/05/26
Sensor-Surface: 2mm (Mechanical Surface Detection)
Electronics: DAE3 Sn509; Calibrated: 2006/06/15
Phantom: SAM 1196
Measurement SW: DASY4, V4.6 Build 23; Postprocessing SW: SEMCAD, V1.8 Build 160

Area Scan (81x91x1): Measurement grid: dx=15mm, dy=15mm
Maximum value of SAR (interpolated) = 0.598 mW/g

Zoom Scan (7x7x7)/Cube 0: Measurement grid: dx=5mm, dy=5mm, dz=5mm
Reference Value = 12.9 V/m; Power Drift = 0.122 dB
Peak SAR (extrapolated) = 1.45 W/kg
SAR(1 g) = 0.514 mW/g; SAR(10 g) = 0.210 mW/g
Maximum value of SAR (measured) = 0.893 mW/g

Test Date = 08/02/06
Ambient Temperature = 25.0 degree C.
Liquid Temperature = Before 23.8 degree C. , After 23.8 degree C.

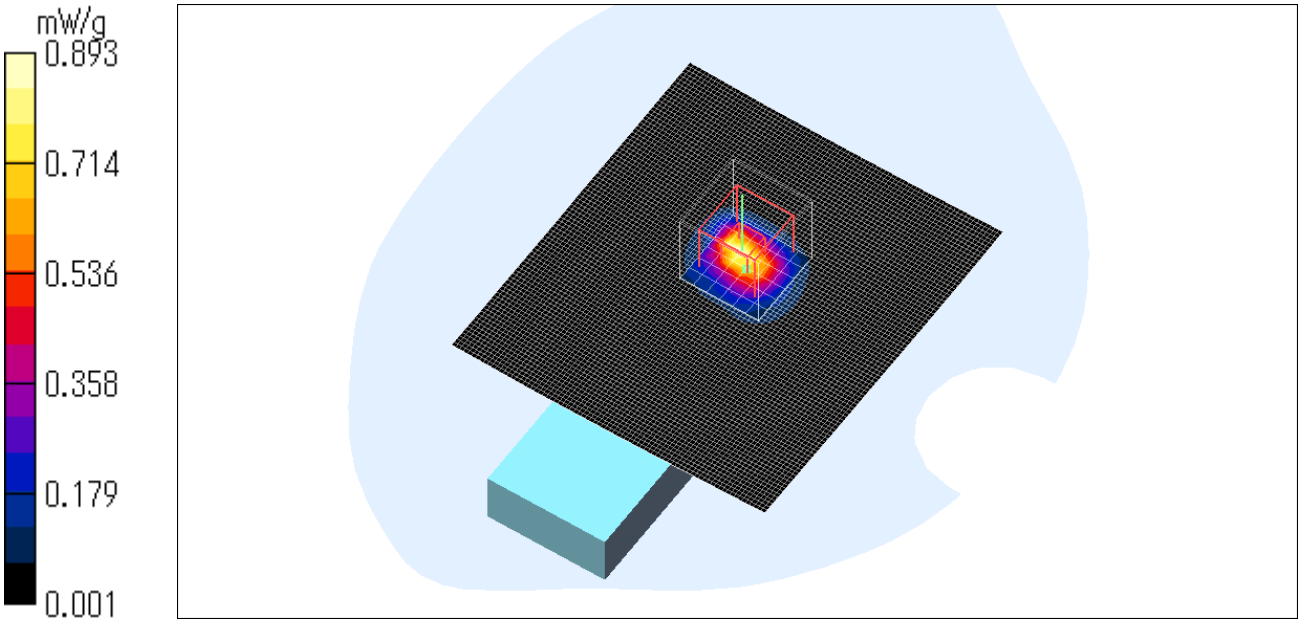

4. Head measurement data of ANT.1

KX-WPA100(Hand Unit) / Head / Left cheek / Ant.1 / 2437MHz / DBPSK (1Mbps)

Crest factor: 1
Medium parameters used: f = 2450 MHz; σ = 1.88 mho/m; ε_r = 37.8; ρ = 1000 kg/m^3
Phantom section: Left Section
Measurement Standard: DASY4 (High Precision Assessment)

DASY4 Configuration:
Probe: EX3DV3 - SN3507; ConvF(8.26, 8.26, 8.26); Calibrated: 2006/05/26
Sensor-Surface: 2mm (Mechanical Surface Detection)
Electronics: DAE3 Sn509; Calibrated: 2006/06/15
Phantom: SAM 1196
Measurement SW: DASY4, V4.6 Build 23; Postprocessing SW: SEMCAD, V1.8 Build 160

Area Scan (91x101x1): Measurement grid: dx=15mm, dy=15mm
Maximum value of SAR (interpolated) = 0.335 mW/g

Zoom Scan (7x7x7)/Cube 0: Measurement grid: dx=5mm, dy=5mm, dz=5mm
Reference Value = 9.37 V/m; Power Drift = 0.144 dB
Peak SAR (extrapolated) = 0.464 W/kg
SAR(1 g) = 0.240 mW/g; SAR(10 g) = 0.122 mW/g
Maximum value of SAR (measured) = 0.352 mW/g

Test Date = 07/31/06
Ambient Temperature = 24.8 degree C.
Liquid Temperature = Before 24.0 degree C. , After 24.0 degree C.

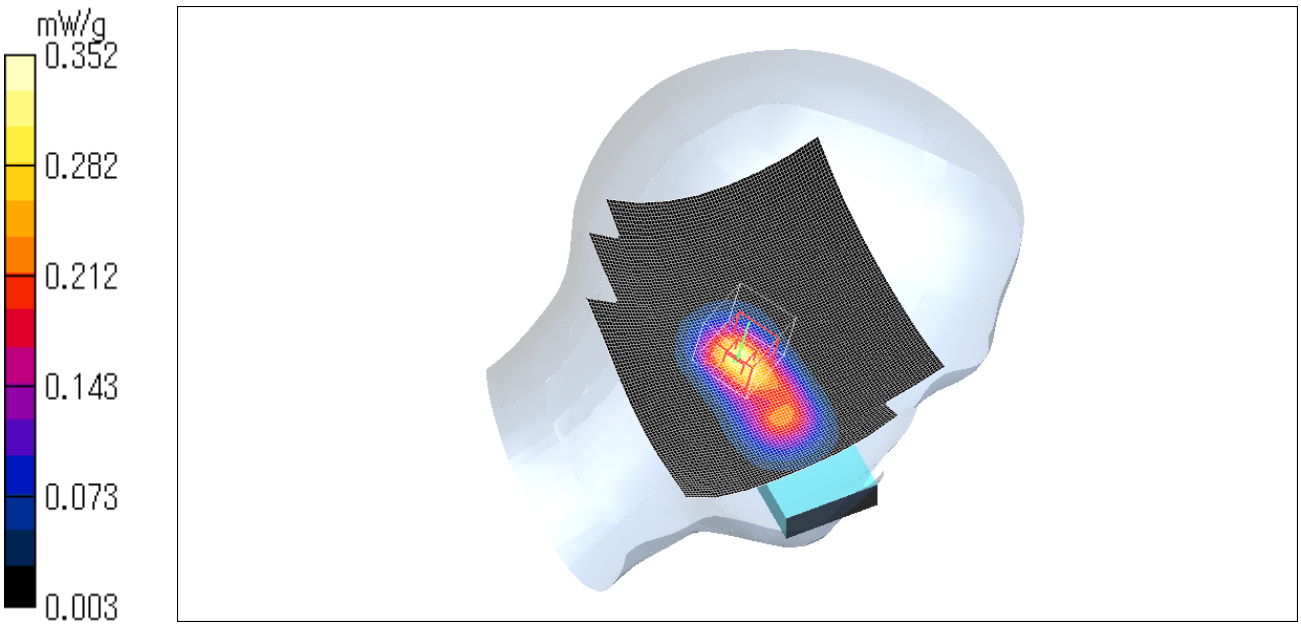

KX-WPA100(Hand Unit) / Head / Left Tilt / Ant.1 / 2437MHz / 11b DBPSK (1Mbps)

Crest factor: 1
Medium parameters used: f = 2450 MHz; σ = 1.88 mho/m; ε_r = 37.8; ρ = 1000 kg/m^3
Phantom section: Left Section
Measurement Standard: DASY4 (High Precision Assessment)

DASY4 Configuration:
Probe: EX3DV3 - SN3507; ConvF(8.26, 8.26, 8.26); Calibrated: 2006/05/26
Sensor-Surface: 2mm (Mechanical Surface Detection)
Electronics: DAE3 Sn509; Calibrated: 2006/06/15
Phantom: SAM 1196
Measurement SW: DASY4, V4.6 Build 23; Postprocessing SW: SEMCAD, V1.8 Build 160

Area Scan (91x101x1): Measurement grid: dx=15mm, dy=15mm
Maximum value of SAR (interpolated) = 0.327 mW/g

Zoom Scan (7x7x7)/Cube 0: Measurement grid: dx=5mm, dy=5mm, dz=5mm
Reference Value = 11.1 V/m; Power Drift = -0.151 dB
Peak SAR (extrapolated) = 0.411 W/kg
SAR(1 g) = 0.219 mW/g; SAR(10 g) = 0.109 mW/g
Maximum value of SAR (measured) = 0.311 mW/g

Test Date = 07/31/06
Ambient Temperature = 24.8 degree C.
Liquid Temperature = Before 24.0 degree C. , After 24.0 degree C.

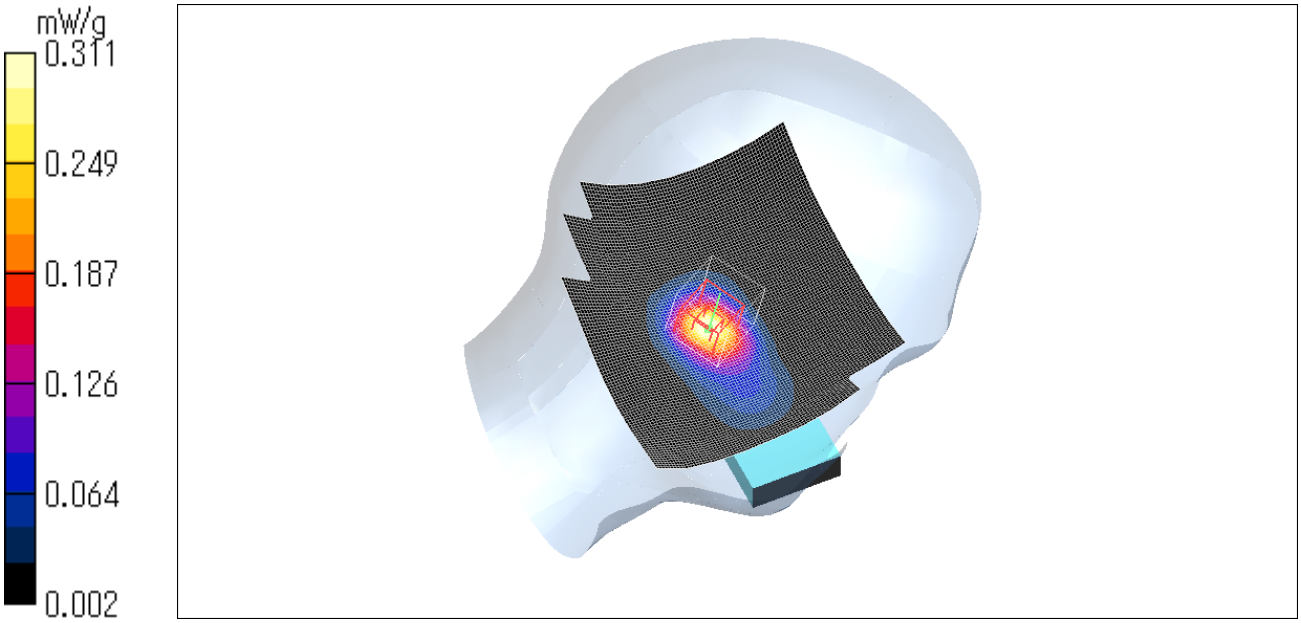

KX-WPA100(Hand Unit) / Head / Right cheek / Ant.1 / 2437MHz / 11b DBPSK (1Mbps)

Crest factor: 1
Medium parameters used: f = 2450 MHz; σ = 1.88 mho/m; ε_r = 37.8; ρ = 1000 kg/m^3
Phantom section: Right Section
Measurement Standard: DASY4 (High Precision Assessment)
DASY4 Configuration:
Probe: EX3DV3 - SN3507; ConvF(8.26, 8.26, 8.26); Calibrated: 2006/05/26
Sensor-Surface: 2mm (Mechanical Surface Detection)
Electronics: DAE3 Sn509; Calibrated: 2006/06/15
Phantom: SAM 1196
Measurement SW: DASY4, V4.6 Build 23; Postprocessing SW: SEMCAD, V1.8 Build 160

Area Scan (91x101x1): Measurement grid: dx=15mm, dy=15mm
Maximum value of SAR (interpolated) = 0.528 mW/g

Zoom Scan (7x7x7)/Cube 0: Measurement grid: dx=5mm, dy=5mm, dz=5mm
Reference Value = 13.1 V/m; Power Drift = -0.049 dB
Peak SAR (extrapolated) = 0.709 W/kg
SAR(1 g) = 0.357 mW/g; SAR(10 g) = 0.169 mW/g
Maximum value of SAR (measured) = 0.531 mW/g

Test Date = 07/31/06
Ambient Temperature = 24.8 degree C.
Liquid Temperature = Before 24.0 degree C. , After 24.0 degree C.

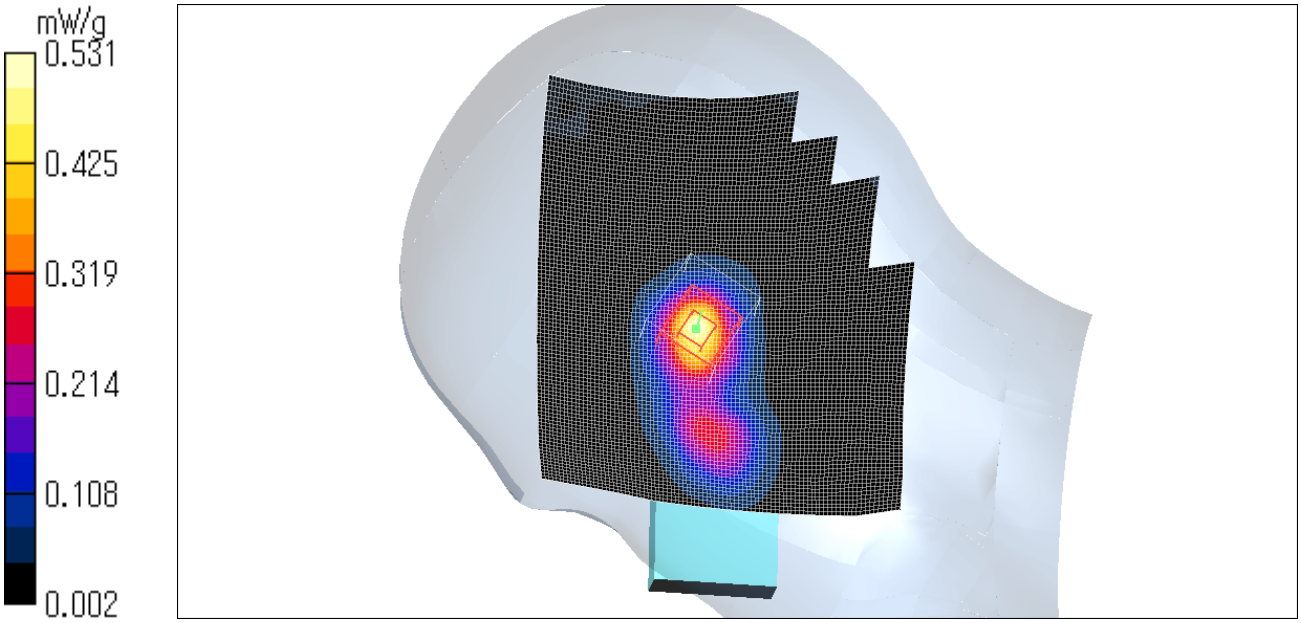

KX-WPA100(Hand Unit) / Head / Right tilt / Ant.1 / 2437MHz / 11b DBPSK (1Mbps)

Crest factor: 1
Medium parameters used: f = 2450 MHz; σ = 1.88 mho/m; ε_r = 37.8; ρ = 1000 kg/m^3
Phantom section: Right Section
Measurement Standard: DASY4 (High Precision Assessment)

DASY4 Configuration:
Probe: EX3DV3 - SN3507; ConvF(8.26, 8.26, 8.26); Calibrated: 2006/05/26
Sensor-Surface: 2mm (Mechanical Surface Detection)
Electronics: DAE3 Sn509; Calibrated: 2006/06/15
Phantom: SAM 1196
Measurement SW: DASY4, V4.6 Build 23; Postprocessing SW: SEMCAD, V1.8 Build 160

Area Scan (91x101x1): Measurement grid: dx=15mm, dy=15mm
Maximum value of SAR (interpolated) = 0.461 mW/g

Zoom Scan (7x7x7)/Cube 0: Measurement grid: dx=5mm, dy=5mm, dz=5mm
Reference Value = 12.9 V/m; Power Drift = -0.034 dB
Peak SAR (extrapolated) = 0.556 W/kg
SAR(1 g) = 0.295 mW/g; SAR(10 g) = 0.143 mW/g
Maximum value of SAR (measured) = 0.425 mW/g

Test Date = 07/31/06
Ambient Temperature = 24.8 degree C.
Liquid Temperature = Before 24.0 degree C. , After 24.0 degree C.

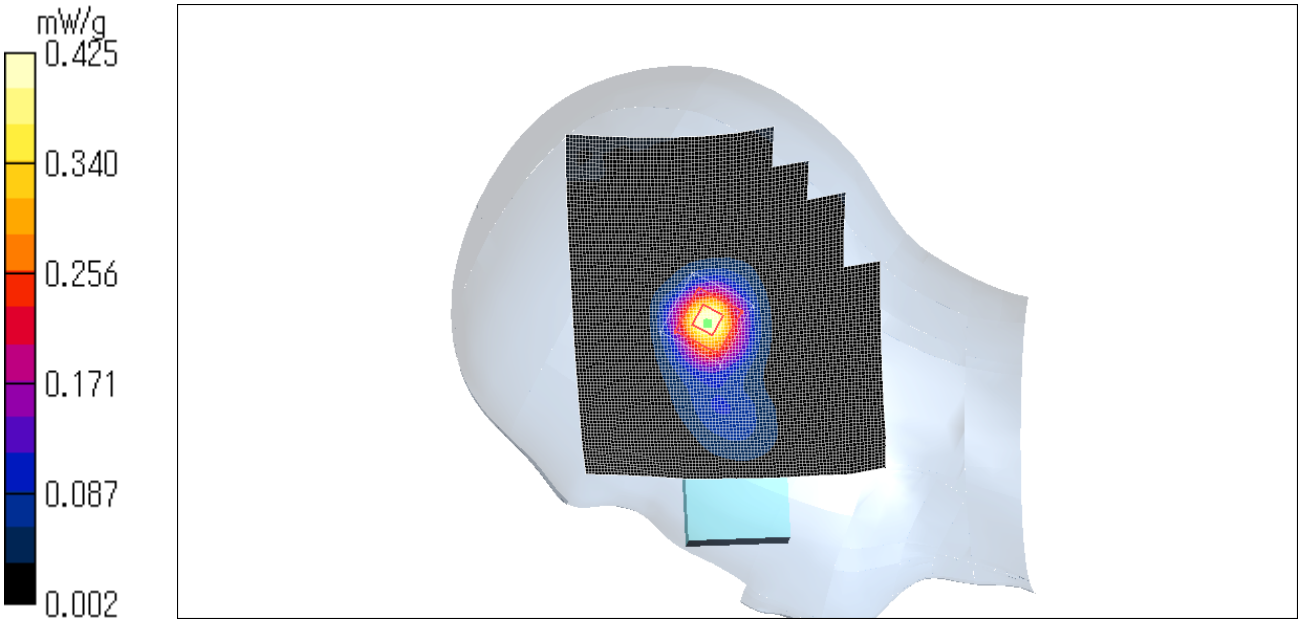

KX-WPA100(Hand Unit) / Head / Right cheek / Ant.1 / 2437MHz / 11b CCK (11Mbps)

Crest factor: 1.2
Medium parameters used: f = 2450 MHz; σ = 1.88 mho/m; ε_r = 37.8; ρ = 1000 kg/m^3
Phantom section: Right Section
Measurement Standard: DASY4 (High Precision Assessment)

DASY4 Configuration:
Probe: EX3DV3 - SN3507; ConvF(8.26, 8.26, 8.26); Calibrated: 2006/05/26
Sensor-Surface: 2mm (Mechanical Surface Detection)
Electronics: DAE3 Sn509; Calibrated: 2006/06/15
Phantom: SAM 1196
Measurement SW: DASY4, V4.6 Build 23; Postprocessing SW: SEMCAD, V1.8 Build 160

Area Scan (91x101x1): Measurement grid: dx=15mm, dy=15mm
Maximum value of SAR (interpolated) = 0.436 mW/g

Zoom Scan (7x7x7)/Cube 0: Measurement grid: dx=5mm, dy=5mm, dz=5mm
Reference Value = 12.1 V/m; Power Drift = -0.002 dB
Peak SAR (extrapolated) = 0.580 W/kg
SAR(1 g) = 0.300 mW/g; SAR(10 g) = 0.143 mW/g
Maximum value of SAR (measured) = 0.432 mW/g

Test Date = 07/31/06
Ambient Temperature = 25.0 degree C.
Liquid Temperature = Before 24.0 degree C. , After 24.0 degree C.

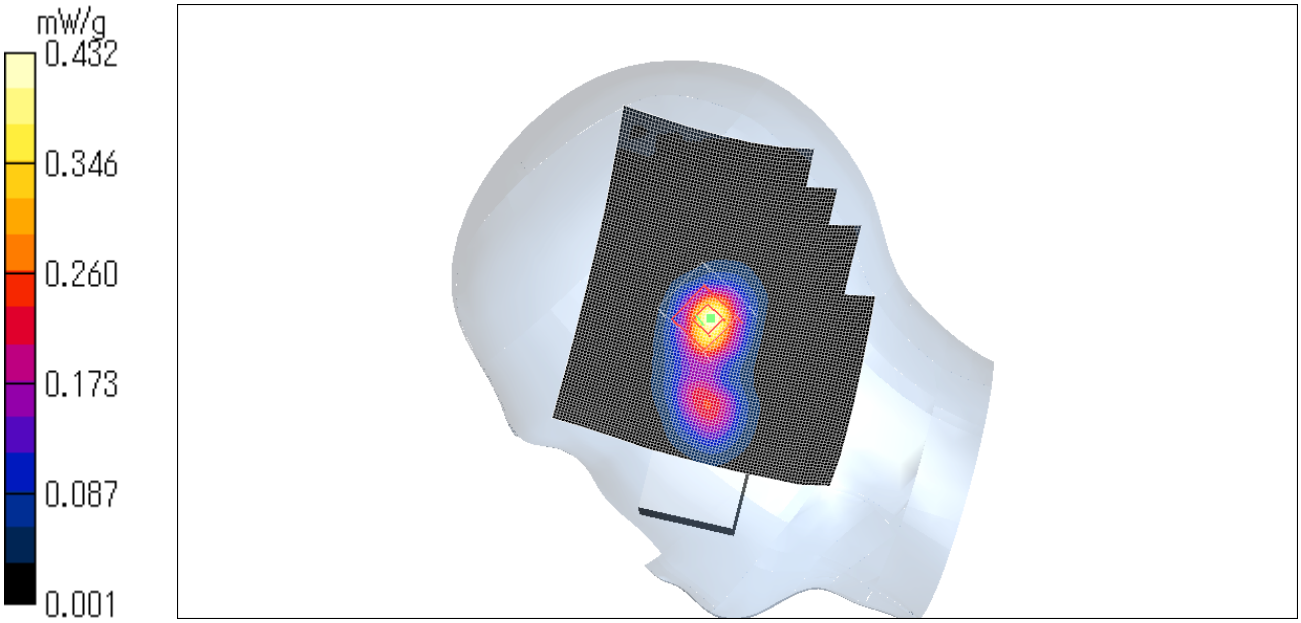

KX-WPA100(Hand Unit) / Head / Right cheek / Ant.1 / 2412MHz / 11b DBPSK (1Mbps)

Crest factor: 1
Medium parameters used: f = 2450 MHz; σ = 1.88 mho/m; ε_r = 37.8; ρ = 1000 kg/m^3
Phantom section: Right Section
Measurement Standard: DASY4 (High Precision Assessment)

DASY4 Configuration:
Probe: EX3DV3 - SN3507; ConvF(8.26, 8.26, 8.26); Calibrated: 2006/05/26
Sensor-Surface: 2mm (Mechanical Surface Detection)
Electronics: DAE3 Sn509; Calibrated: 2006/06/15
Phantom: SAM 1196
Measurement SW: DASY4, V4.6 Build 23; Postprocessing SW: SEMCAD, V1.8 Build 160

Area Scan (71x101x1): Measurement grid: dx=15mm, dy=15mm
Maximum value of SAR (interpolated) = 0.519 mW/g

Zoom Scan (7x7x7)/Cube 0: Measurement grid: dx=5mm, dy=5mm, dz=5mm
Reference Value = 13.1 V/m; Power Drift = 0.050 dB
Peak SAR (extrapolated) = 0.634 W/kg
SAR(1 g) = 0.335 mW/g; SAR(10 g) = 0.160 mW/g
Maximum value of SAR (measured) = 0.490 mW/g

Test Date = 07/31/06
Ambient Temperature = 24.8 degree C.
Liquid Temperature = Before 24.0 degree C. , After 24.0 degree C.

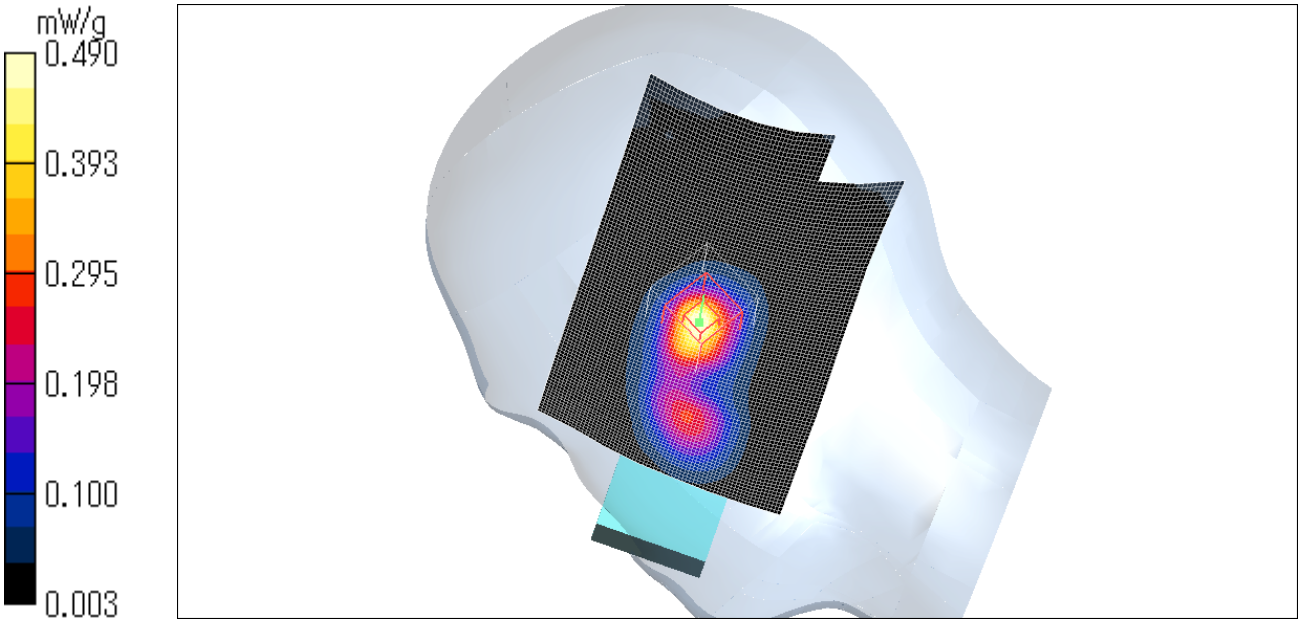

KX-WPA100(Hand Unit) / Head / Right cheek / Ant.1 / 2462MHz / 11b DBPSK (1Mbps)

Crest factor: 1
Medium parameters used: f = 2450 MHz; σ = 1.88 mho/m; ε_r = 37.8; ρ = 1000 kg/m^3
Phantom section: Right Section
Measurement Standard: DASY4 (High Precision Assessment)

DASY4 Configuration:
Probe: EX3DV3 - SN3507; ConvF(8.26, 8.26, 8.26); Calibrated: 2006/05/26
Sensor-Surface: 2mm (Mechanical Surface Detection)
Electronics: DAE3 Sn509; Calibrated: 2006/06/15
Phantom: SAM 1196
Measurement SW: DASY4, V4.6 Build 23; Postprocessing SW: SEMCAD, V1.8 Build 160

Area Scan (71x101x1): Measurement grid: dx=15mm, dy=15mm
Maximum value of SAR (interpolated) = 0.572 mW/g

Zoom Scan (7x7x7)/Cube 0: Measurement grid: dx=5mm, dy=5mm, dz=5mm
Reference Value = 13.2 V/m; Power Drift = -0.215 dB
Peak SAR (extrapolated) = 0.718 W/kg
SAR(1 g) = 0.376 mW/g; SAR(10 g) = 0.178 mW/g
Maximum value of SAR (measured) = 0.551 mW/g

Test Date = 07/31/06
Ambient Temperature = 24.8 degree C.
Liquid Temperature = Before 24.0 degree C. , After 24.0 degree C.

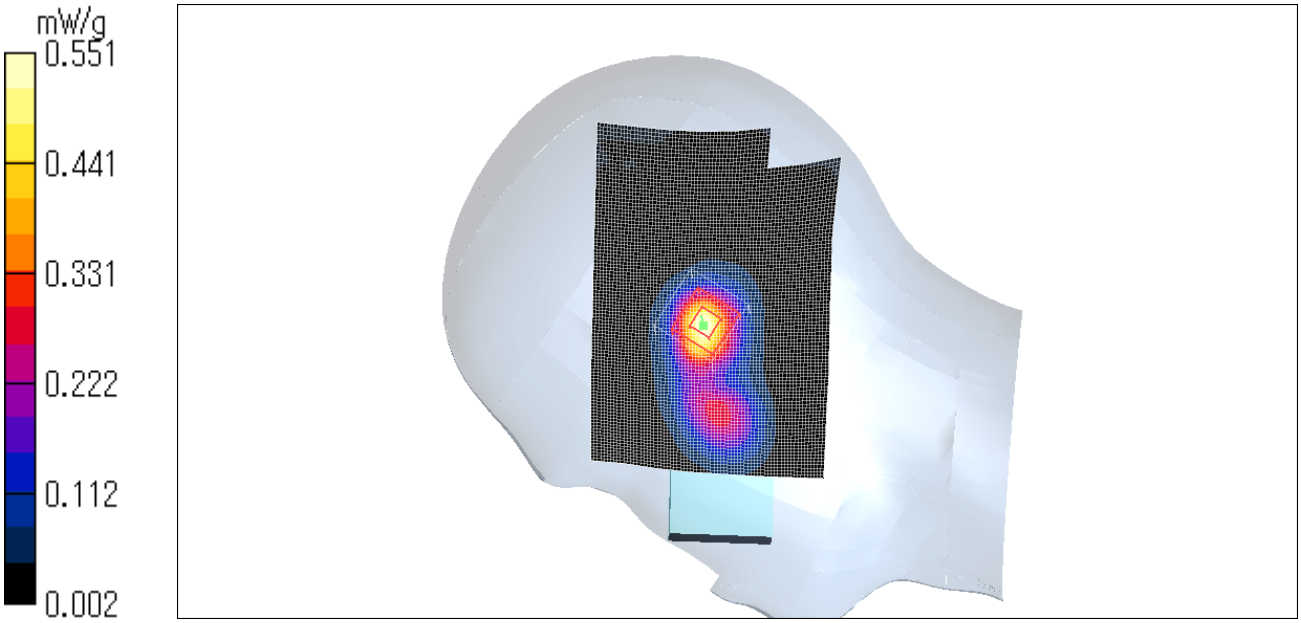

KX-WPA100(Hand Unit) / Head / Left cheek / Ant.1 / 2437MHz / 11g BPSK (6Mbps)

Crest factor: 1.1
Medium parameters used: f = 2450 MHz; σ = 1.88 mho/m; ε_r = 37.8; ρ = 1000 kg/m^3
Phantom section: Left Section
Measurement Standard: DASY4 (High Precision Assessment)

DASY4 Configuration:
Probe: EX3DV3 - SN3507; ConvF(8.26, 8.26, 8.26); Calibrated: 2006/05/26
Sensor-Surface: 2mm (Mechanical Surface Detection)
Electronics: DAE3 Sn509; Calibrated: 2006/06/15
Phantom: SAM 1196
Measurement SW: DASY4, V4.6 Build 23; Postprocessing SW: SEMCAD, V1.8 Build 160

Area Scan (71x81x1): Measurement grid: dx=15mm, dy=15mm
Maximum value of SAR (interpolated) = 0.197 mW/g

Zoom Scan (7x7x7)/Cube 0: Measurement grid: dx=5mm, dy=5mm, dz=5mm
Reference Value = 5.83 V/m; Power Drift = 0.060 dB
Peak SAR (extrapolated) = 0.257 W/kg
SAR(1 g) = 0.133 mW/g; SAR(10 g) = 0.066 mW/g
Maximum value of SAR (measured) = 0.198 mW/g

Test Date = 07/31/06
Ambient Temperature = 24.8 degree C.
Liquid Temperature = Before 24.0 degree C. , After 24.0 degree C.

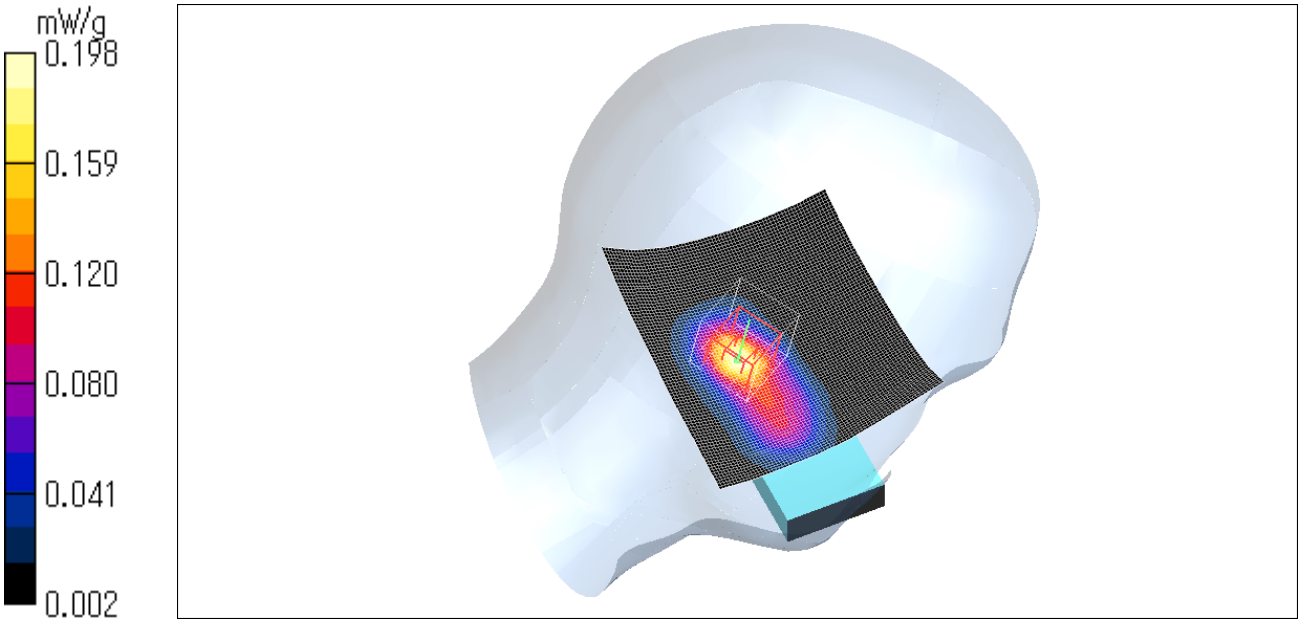

KX-WPA100(Hand Unit) / Head / Left tilt / Ant.1 / 2437MHz / 11g BPSK (6Mbps)

Crest factor: 1.1
Medium parameters used: f = 2450 MHz; σ = 1.88 mho/m; ε_r = 37.8; ρ = 1000 kg/m^3
Phantom section: Left Section
Measurement Standard: DASY4 (High Precision Assessment)

DASY4 Configuration:
Probe: EX3DV3 - SN3507; ConvF(8.26, 8.26, 8.26); Calibrated: 2006/05/26
Sensor-Surface: 2mm (Mechanical Surface Detection)
Electronics: DAE3 Sn509; Calibrated: 2006/06/15
Phantom: SAM 1196
Measurement SW: DASY4, V4.6 Build 23; Postprocessing SW: SEMCAD, V1.8 Build 160

Area Scan (71x81x1): Measurement grid: dx=15mm, dy=15mm
Maximum value of SAR (interpolated) = 0.169 mW/g

Zoom Scan (7x7x7)/Cube 0: Measurement grid: dx=5mm, dy=5mm, dz=5mm
Reference Value = 7.10 V/m; Power Drift = -0.126 dB
Peak SAR (extrapolated) = 0.213 W/kg
SAR(1 g) = 0.111 mW/g; SAR(10 g) = 0.056 mW/g
Maximum value of SAR (measured) = 0.163 mW/g

Test Date = 07/31/06
Ambient Temperature = 24.8 degree C.
Liquid Temperature = Before 24.0 degree C. , After 24.0 degree C.

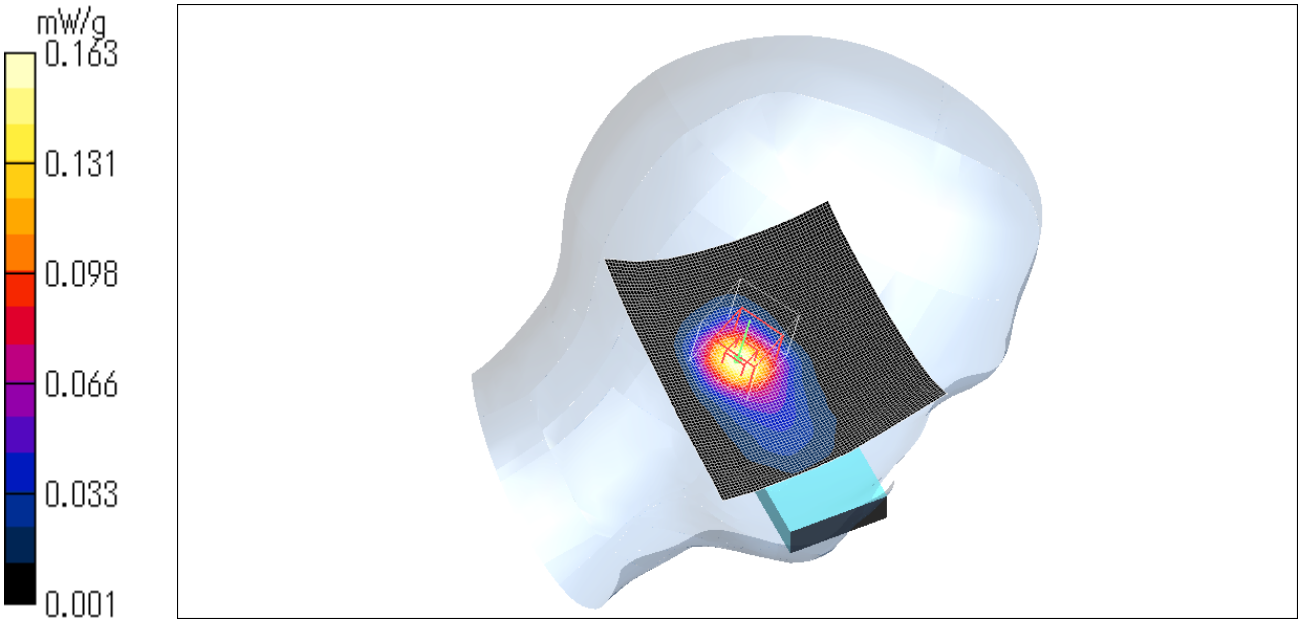

KX-WPA100(Hand Unit) / Head / Right cheek / Ant.1 / 2437MHz / 11g BPSK (6Mbps)

Crest factor: 1.1
Medium parameters used: f = 2450 MHz; σ = 1.88 mho/m; ε_r = 37.8; ρ = 1000 kg/m^3
Phantom section: Right Section
Measurement Standard: DASY4 (High Precision Assessment)

DASY4 Configuration:
Probe: EX3DV3 - SN3507; ConvF(8.26, 8.26, 8.26); Calibrated: 2006/05/26
Sensor-Surface: 2mm (Mechanical Surface Detection)
Electronics: DAE3 Sn509; Calibrated: 2006/06/15
Phantom: SAM 1196
Measurement SW: DASY4, V4.6 Build 23; Postprocessing SW: SEMCAD, V1.8 Build 160

Area Scan (71x101x1): Measurement grid: dx=15mm, dy=15mm
Maximum value of SAR (interpolated) = 0.316 mW/g

Zoom Scan (7x7x7)/Cube 0: Measurement grid: dx=5mm, dy=5mm, dz=5mm
Reference Value = 8.03 V/m; Power Drift = 0.112 dB
Peak SAR (extrapolated) = 0.385 W/kg
SAR(1 g) = 0.197 mW/g; SAR(10 g) = 0.094 mW/g
Maximum value of SAR (measured) = 0.291 mW/g

Test Date = 07/31/06
Ambient Temperature = 24.8 degree C.
Liquid Temperature = Before 24.0 degree C. , After 24.0 degree C.

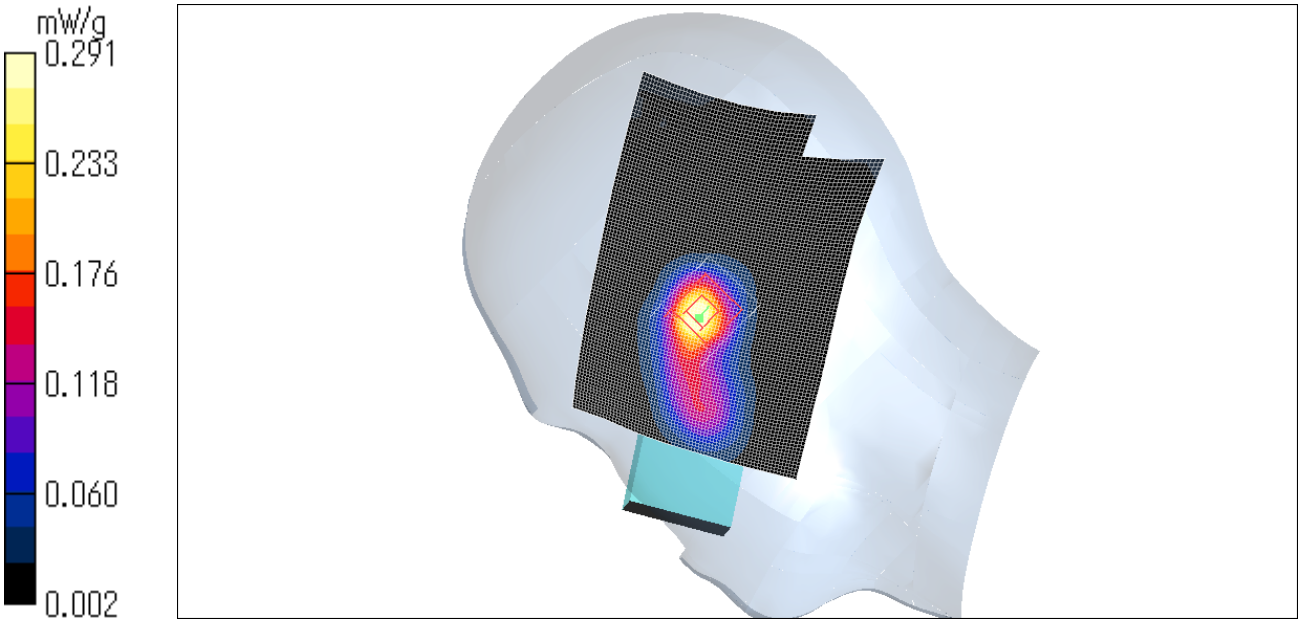

KX-WPA100(Hand Unit) / Head / Right tilt / Ant.1 / 2437MHz / 11g BPSK (6Mbps)

Crest factor: 1.1
Medium parameters used: f = 2450 MHz; σ = 1.88 mho/m; ε_r = 37.8; ρ = 1000 kg/m^3
Phantom section: Right Section
Measurement Standard: DASY4 (High Precision Assessment)

DASY4 Configuration:
Probe: EX3DV3 - SN3507; ConvF(8.26, 8.26, 8.26); Calibrated: 2006/05/26
Sensor-Surface: 2mm (Mechanical Surface Detection)
Electronics: DAE3 Sn509; Calibrated: 2006/06/15
Phantom: SAM 1196
Measurement SW: DASY4, V4.6 Build 23; Postprocessing SW: SEMCAD, V1.8 Build 160

Area Scan (71x81x1): Measurement grid: dx=15mm, dy=15mm
Maximum value of SAR (interpolated) = 0.213 mW/g

Zoom Scan (7x7x7)/Cube 0: Measurement grid: dx=5mm, dy=5mm, dz=5mm
Reference Value = 8.56 V/m; Power Drift = -0.071 dB
Peak SAR (extrapolated) = 0.274 W/kg
SAR(1 g) = 0.145 mW/g; SAR(10 g) = 0.071 mW/g
Maximum value of SAR (measured) = 0.212 mW/g

Test Date = 07/31/06
Ambient Temperature = 24.8 degree C.
Liquid Temperature = Before 24.0 degree C. , After 24.0 degree C.

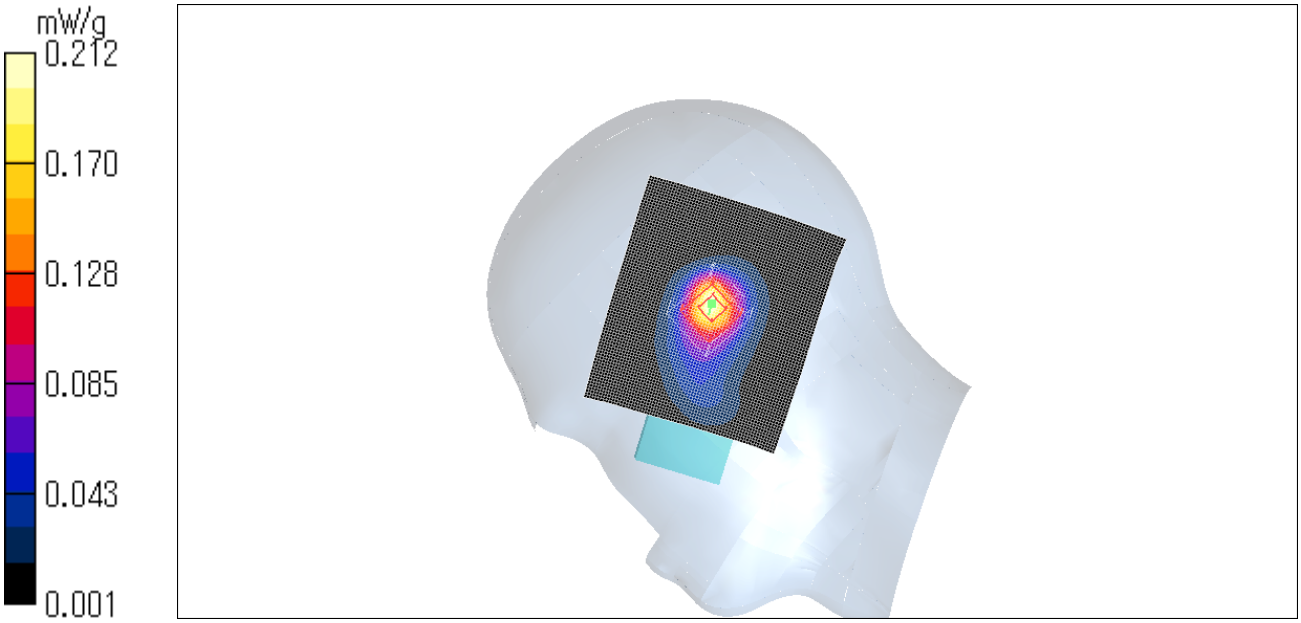

KX-WPA100(Hand Unit) / Head / Right cheek / Ant.1 / 2437MHz / 11g QPSK (12Mbps)

Crest factor: 1.5
Medium parameters used: f = 2450 MHz; σ = 1.88 mho/m; ε_r = 37.8; ρ = 1000 kg/m^3
Phantom section: Right Section
Measurement Standard: DASY4 (High Precision Assessment)

DASY4 Configuration:
Probe: EX3DV3 - SN3507; ConvF(8.26, 8.26, 8.26); Calibrated: 2006/05/26
Sensor-Surface: 2mm (Mechanical Surface Detection)
Electronics: DAE3 Sn509; Calibrated: 2006/06/15
Phantom: SAM 1196
Measurement SW: DASY4, V4.6 Build 23; Postprocessing SW: SEMCAD, V1.8 Build 160

Area Scan (71x81x1): Measurement grid: dx=15mm, dy=15mm
Maximum value of SAR (interpolated) = 0.219 mW/g

Zoom Scan (7x7x7)/Cube 0: Measurement grid: dx=5mm, dy=5mm, dz=5mm
Reference Value = 7.07 V/m; Power Drift = 0.195 dB
Peak SAR (extrapolated) = 0.290 W/kg
SAR(1 g) = 0.146 mW/g; SAR(10 g) = 0.069 mW/g
Maximum value of SAR (measured) = 0.215 mW/g

Test Date = 07/31/06
Ambient Temperature = 24.8 degree C.
Liquid Temperature = Before 24.0 degree C. , After 24.0 degree C.

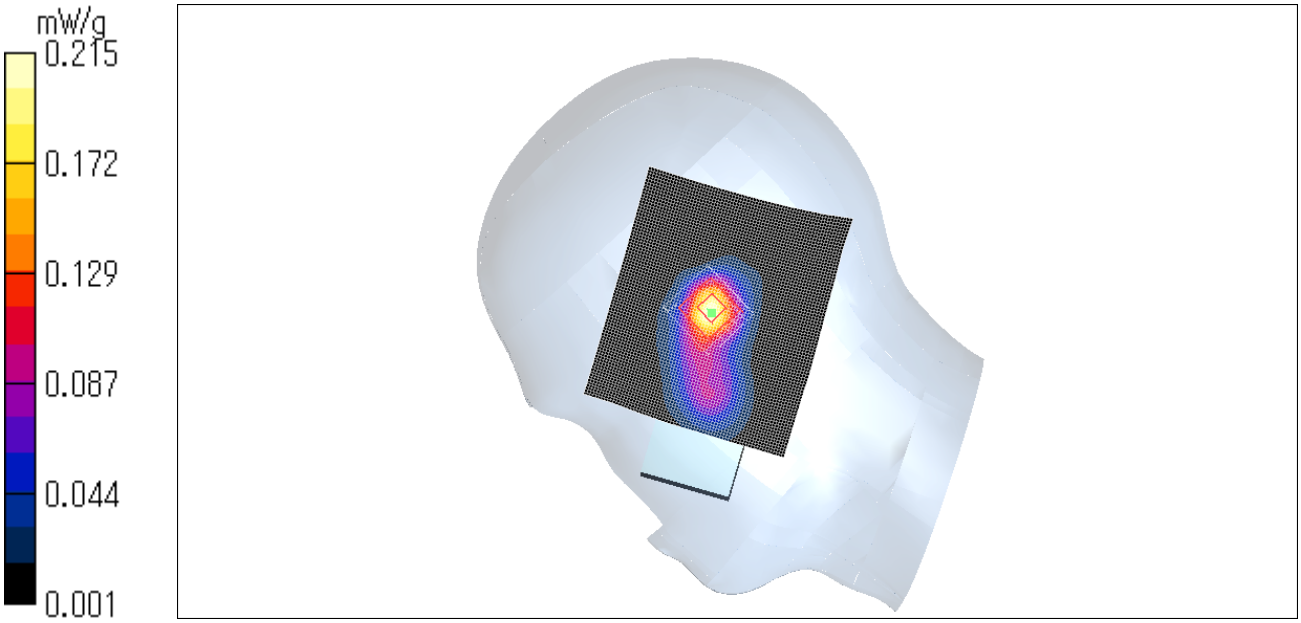

KX-WPA100(Hand Unit) / Head / Right cheek / Ant.1 / 2437MHz / 11g 16QAM (24Mbps)

Crest factor: 2.6
Medium parameters used: f = 2450 MHz; σ = 1.88 mho/m; ε_r = 37.8; ρ = 1000 kg/m^3
Phantom section: Right Section
Measurement Standard: DASY4 (High Precision Assessment)

DASY4 Configuration:
Probe: EX3DV3 - SN3507; ConvF(8.26, 8.26, 8.26); Calibrated: 2006/05/26
Sensor-Surface: 2mm (Mechanical Surface Detection)
Electronics: DAE3 Sn509; Calibrated: 2006/06/15
Phantom: SAM 1196
Measurement SW: DASY4, V4.6 Build 23; Postprocessing SW: SEMCAD, V1.8 Build 160

Area Scan (71x81x1): Measurement grid: dx=15mm, dy=15mm
Maximum value of SAR (interpolated) = 0.115 mW/g

Zoom Scan (7x7x7)/Cube 0: Measurement grid: dx=5mm, dy=5mm, dz=5mm
Reference Value = 5.15 V/m; Power Drift = 0.150 dB
Peak SAR (extrapolated) = 0.154 W/kg
SAR(1 g) = 0.077 mW/g; SAR(10 g) = 0.036 mW/g
Maximum value of SAR (measured) = 0.115 mW/g

Test Date = 07/31/06
Ambient Temperature = 24.8 degree C.
Liquid Temperature = Before 24.0 degree C. , After 24.0 degree C.

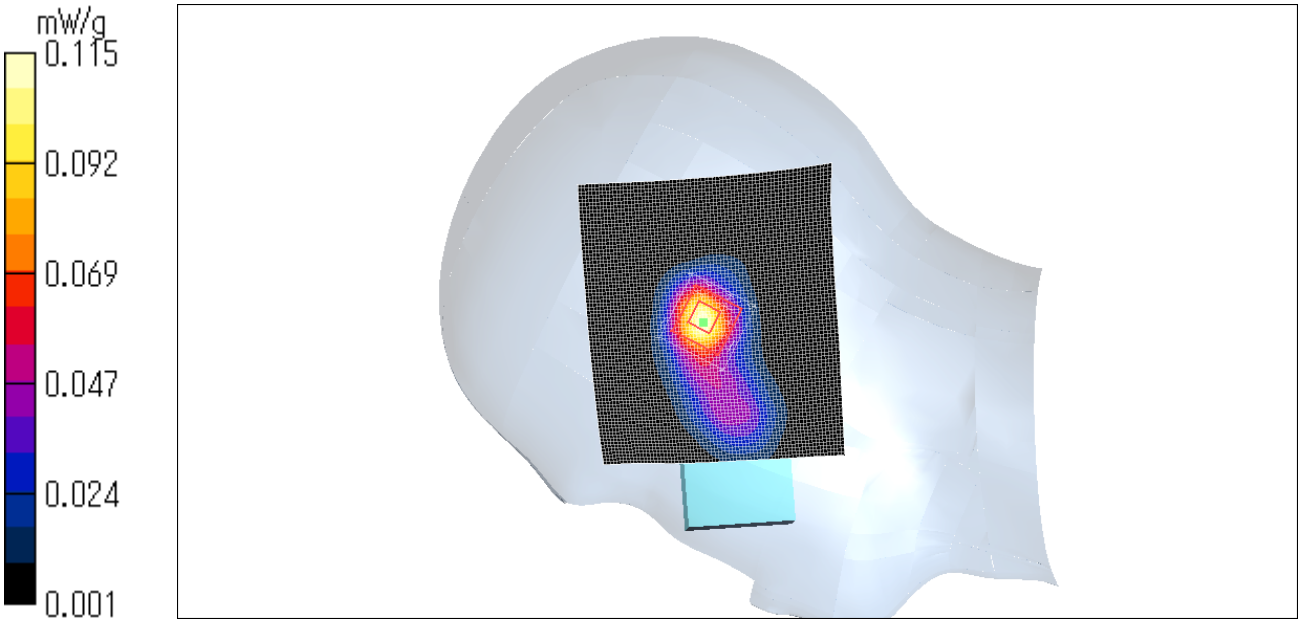

KX-WPA100(Hand Unit) / Head / Right cheek / Ant.1 / 2437MHz / 11g 64QAM (48Mbps)

Crest factor: 5.7
Medium parameters used: f = 2450 MHz; σ = 1.88 mho/m; ε_r = 37.8; ρ = 1000 kg/m^3
Phantom section: Right Section
Measurement Standard: DASY4 (High Precision Assessment)

DASY4 Configuration:
Probe: EX3DV3 - SN3507; ConvF(8.26, 8.26, 8.26); Calibrated: 2006/05/26
Sensor-Surface: 2mm (Mechanical Surface Detection)
Electronics: DAE3 Sn509; Calibrated: 2006/06/15
Phantom: SAM 1196
Measurement SW: DASY4, V4.6 Build 23; Postprocessing SW: SEMCAD, V1.8 Build 160

Area Scan (71x81x1): Measurement grid: dx=15mm, dy=15mm
Maximum value of SAR (interpolated) = 0.058 mW/g

Zoom Scan (7x7x7)/Cube 0: Measurement grid: dx=5mm, dy=5mm, dz=5mm
Reference Value = 3.54 V/m; Power Drift = 0.198 dB
Peak SAR (extrapolated) = 0.068 W/kg
SAR(1 g) = 0.036 mW/g; SAR(10 g) = 0.017 mW/g
Maximum value of SAR (measured) = 0.052 mW/g

Test Date = 07/31/06
Ambient Temperature = 24.8 degree C.
Liquid Temperature = Before 23.9 degree C. , After 23.8 degree C.

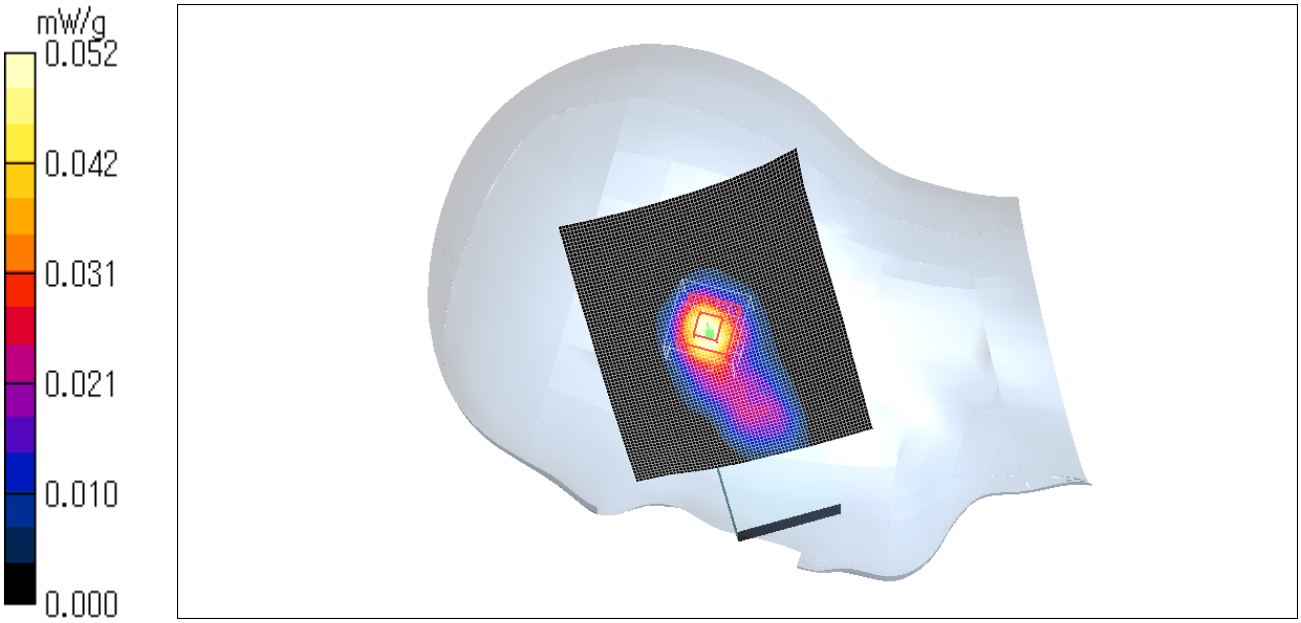

KX-WPA100(Hand Unit) / Head / Right cheek / Ant.1 / 2412MHz / 11g BPSK (6Mbps)

Crest factor: 1.1
Medium parameters used: f = 2450 MHz; σ = 1.88 mho/m; ε_r = 37.8; ρ = 1000 kg/m^3
Phantom section: Right Section
Measurement Standard: DASY4 (High Precision Assessment)

DASY4 Configuration:
Probe: EX3DV3 - SN3507; ConvF(8.26, 8.26, 8.26); Calibrated: 2006/05/26
Sensor-Surface: 2mm (Mechanical Surface Detection)
Electronics: DAE3 Sn509; Calibrated: 2006/06/15
Phantom: SAM 1196
Measurement SW: DASY4, V4.6 Build 23; Postprocessing SW: SEMCAD, V1.8 Build 160

Area Scan (71x81x1): Measurement grid: dx=15mm, dy=15mm
Maximum value of SAR (interpolated) = 0.284 mW/g

Zoom Scan (7x7x7)/Cube 0: Measurement grid: dx=5mm, dy=5mm, dz=5mm
Reference Value = 5.43 V/m; Power Drift = 0.215 dB
Peak SAR (extrapolated) = 0.352 W/kg
SAR(1 g) = 0.182 mW/g; SAR(10 g) = 0.086 mW/g
Maximum value of SAR (measured) = 0.268 mW/g

Test Date = 07/31/06
Ambient Temperature = 24.8 degree C.
Liquid Temperature = Before 23.8 degree C. , After 23.8 degree C.

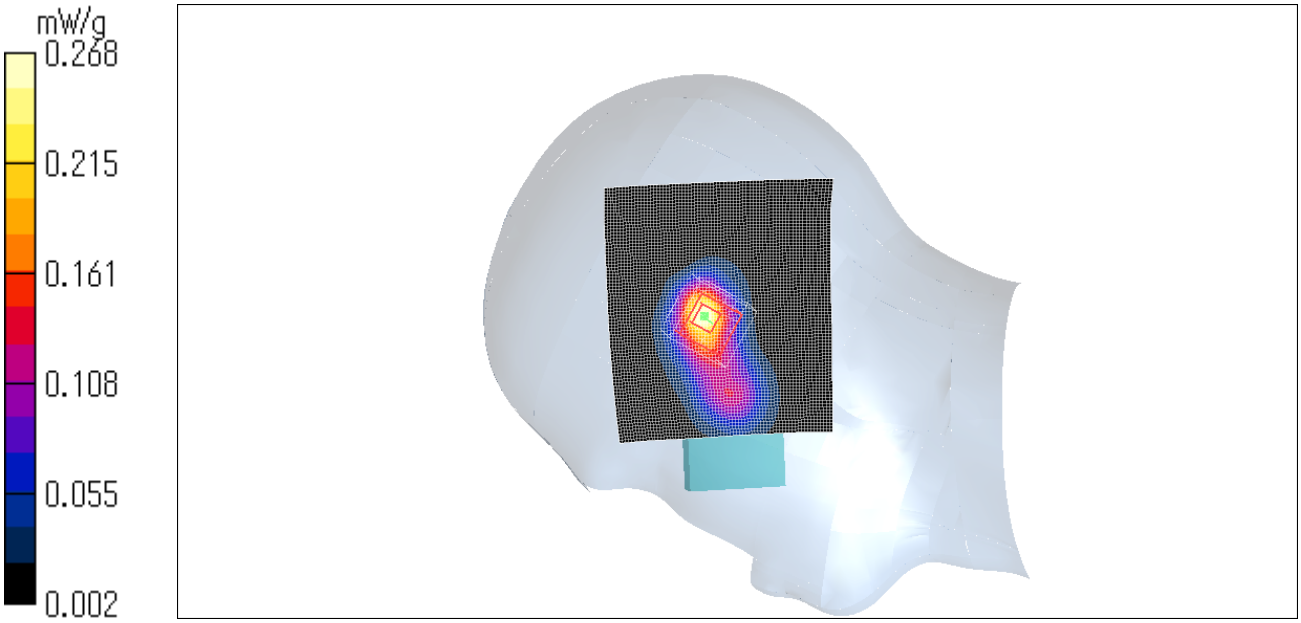

KX-WPA100(Hand Unit) / Head / Right cheek / Ant.1 / 2462MHz / 11g BPSK (6Mbps)

Crest factor: 1.1
Medium parameters used: f = 2450 MHz; σ = 1.88 mho/m; ε_r = 37.8; ρ = 1000 kg/m^3
Phantom section: Right Section
Measurement Standard: DASY4 (High Precision Assessment)

DASY4 Configuration:
Probe: EX3DV3 - SN3507; ConvF(8.26, 8.26, 8.26); Calibrated: 2006/05/26
Sensor-Surface: 2mm (Mechanical Surface Detection)
Electronics: DAE3 Sn509; Calibrated: 2006/06/15
Phantom: SAM 1196
Measurement SW: DASY4, V4.6 Build 23; Postprocessing SW: SEMCAD, V1.8 Build 160

Area Scan (71x81x1): Measurement grid: dx=15mm, dy=15mm
Maximum value of SAR (interpolated) = 0.320 mW/g

Zoom Scan (7x7x7)/Cube 0: Measurement grid: dx=5mm, dy=5mm, dz=5mm
Reference Value = 5.81 V/m; Power Drift = -0.163 dB
Peak SAR (extrapolated) = 0.403 W/kg
SAR(1 g) = 0.204 mW/g; SAR(10 g) = 0.095 mW/g
Maximum value of SAR (measured) = 0.304 mW/g

Test Date = 07/31/06
Ambient Temperature = 24.8 degree C.
Liquid Temperature = Before 23.8 degree C. , After 23.8 degree C.

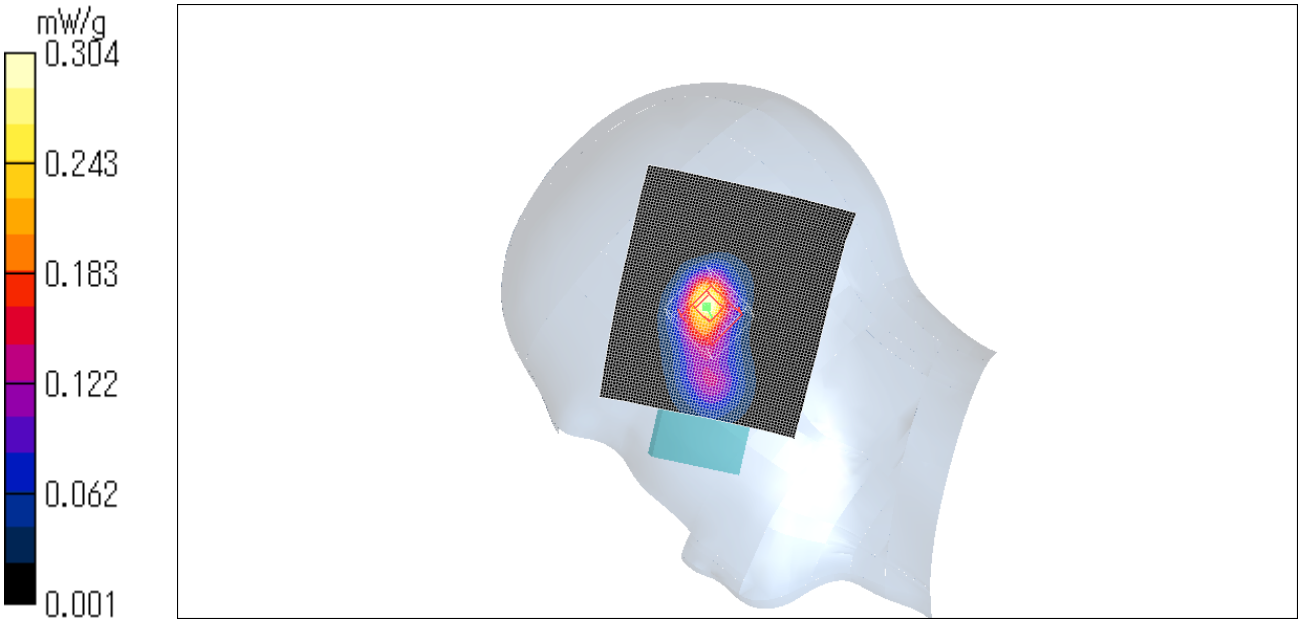

5. Body measurement data of ANT.1

KX-WPA100(Hand Unit) / Body / Front / Ant.1 / 2437MHz / 11b DBPSK (1Mbps)

Crest factor: 1
Medium parameters used: f = 2450 MHz; σ = 1.97 mho/m; ε_r = 50.3; ρ = 1000 kg/m^3
Phantom section: Flat Section
Measurement Standard: DASY4 (High Precision Assessment)

DASY4 Configuration:
Probe: EX3DV3 - SN3507; ConvF(8.24, 8.24, 8.24); Calibrated: 2006/05/26
Sensor-Surface: 2mm (Mechanical Surface Detection)
Electronics: DAE3 Sn509; Calibrated: 2006/06/15
Phantom: SAM 1196
Measurement SW: DASY4, V4.6 Build 23; Postprocessing SW: SEMCAD, V1.8 Build 160

Area Scan (81x91x1): Measurement grid: dx=15mm, dy=15mm
Maximum value of SAR (interpolated) = 0.770 mW/g

Zoom Scan (7x7x7)/Cube 0: Measurement grid: dx=5mm, dy=5mm, dz=5mm
Reference Value = 8.04 V/m; Power Drift = -0.213 dB
Peak SAR (extrapolated) = 0.928 W/kg
SAR(1 g) = 0.446 mW/g; SAR(10 g) = 0.210 mW/g
Maximum value of SAR (measured) = 0.654 mW/g

Test Date = 08/01/06
Ambient Temperature = 25.0 degree C.
Liquid Temperature = Before 24.0 degree C. , After 24.0 degree C.

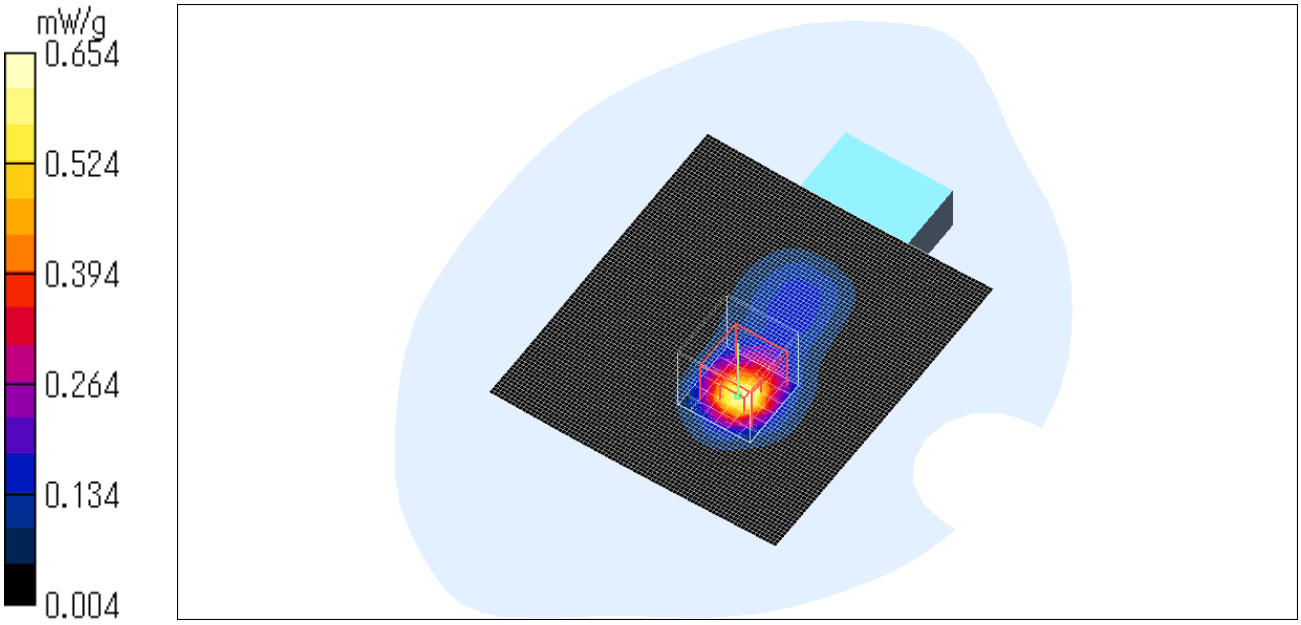

KX-WPA100(Hand Unit) / Body / Back / Ant.1 / 2437MHz / 11b DBPSK (1Mbps)

Crest factor: 1
Medium parameters used: f = 2450 MHz; σ = 1.97 mho/m; ε_r = 50.3; ρ = 1000 kg/m^3
Phantom section: Flat Section
Measurement Standard: DASY4 (High Precision Assessment)

DASY4 Configuration:
Probe: EX3DV3 - SN3507; ConvF(8.24, 8.24, 8.24); Calibrated: 2006/05/26
Sensor-Surface: 2mm (Mechanical Surface Detection)Sensor-Surface: 0mm (Fix Surface)
Electronics: DAE3 Sn509; Calibrated: 2006/06/15
Phantom: SAM 1196
Measurement SW: DASY4, V4.6 Build 23; Postprocessing SW: SEMCAD, V1.8 Build 160

Area Scan (81x91x1): Measurement grid: dx=15mm, dy=15mm
Maximum value of SAR (interpolated) = 0.823 mW/g

Zoom Scan (7x7x7)/Cube 0: Measurement grid: dx=5mm, dy=5mm, dz=5mm
Reference Value = 18.5 V/m; Power Drift = 0.014 dB
Peak SAR (extrapolated) = 0.934 W/kg
SAR(1 g) = 0.408 mW/g; SAR(10 g) = 0.188 mW/g
Maximum value of SAR (measured) = 0.638 mW/g

Test Date = 08/01/06
Ambient Temperature = 25.0 degree C.
Liquid Temperature = Before 24.0 degree C. , After 24.0 degree C.

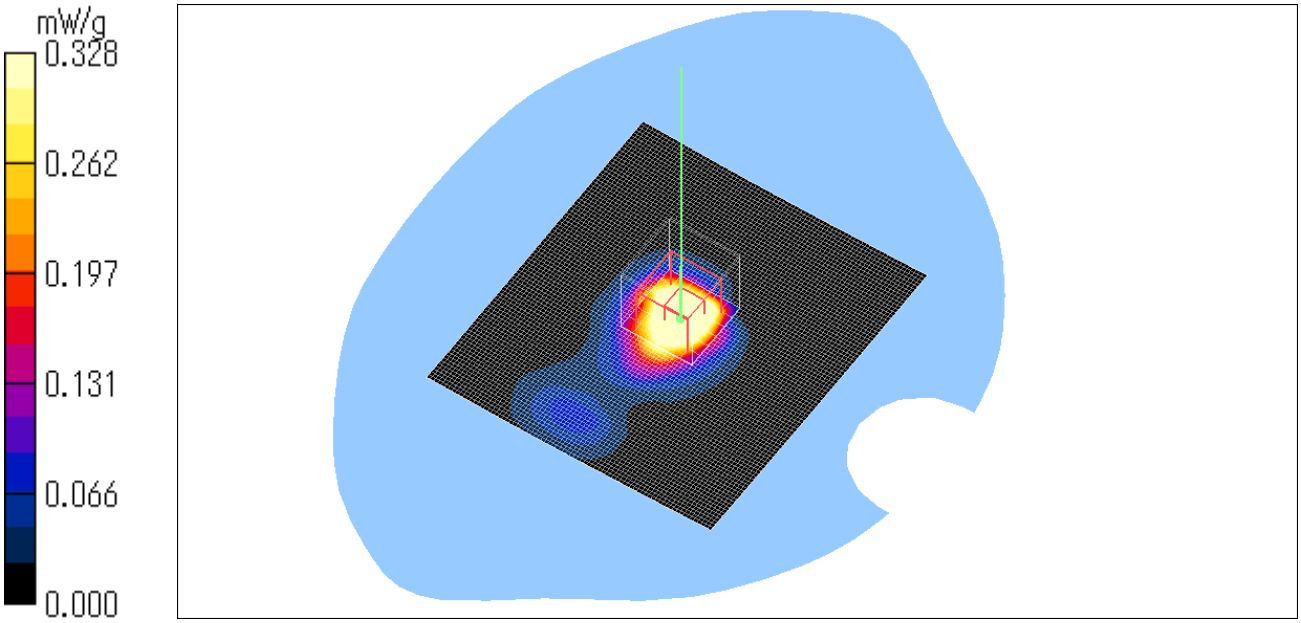

KX-WPA100(Hand Unit) / Body / Front / Ant.1 / 2437MHz / 11b CCK (11Mbps)

Crest factor: 1.2
Medium parameters used: f = 2450 MHz; σ = 1.97 mho/m; ε_r = 50.3; ρ = 1000 kg/m^3
Phantom section: Flat Section
Measurement Standard: DASY4 (High Precision Assessment)

DASY4 Configuration:
Probe: EX3DV3 - SN3507; ConvF(8.24, 8.24, 8.24); Calibrated: 2006/05/26
Sensor-Surface: 2mm (Mechanical Surface Detection)
Electronics: DAE3 Sn509; Calibrated: 2006/06/15
Phantom: SAM 1196
Measurement SW: DASY4, V4.6 Build 23; Postprocessing SW: SEMCAD, V1.8 Build 160

Area Scan (81x91x1): Measurement grid: dx=15mm, dy=15mm
Maximum value of SAR (interpolated) = 0.624 mW/g

Zoom Scan (7x7x7)/Cube 0: Measurement grid: dx=5mm, dy=5mm, dz=5mm
Reference Value = 7.06 V/m; Power Drift = 0.123 dB
Peak SAR (extrapolated) = 0.729 W/kg
SAR(1 g) = 0.380 mW/g; SAR(10 g) = 0.178 mW/g
Maximum value of SAR (measured) = 0.558 mW/g

Test Date = 08/01/06
Ambient Temperature = 25.0 degree C.
Liquid Temperature = Before 24.0 degree C. , After 24.0 degree C.

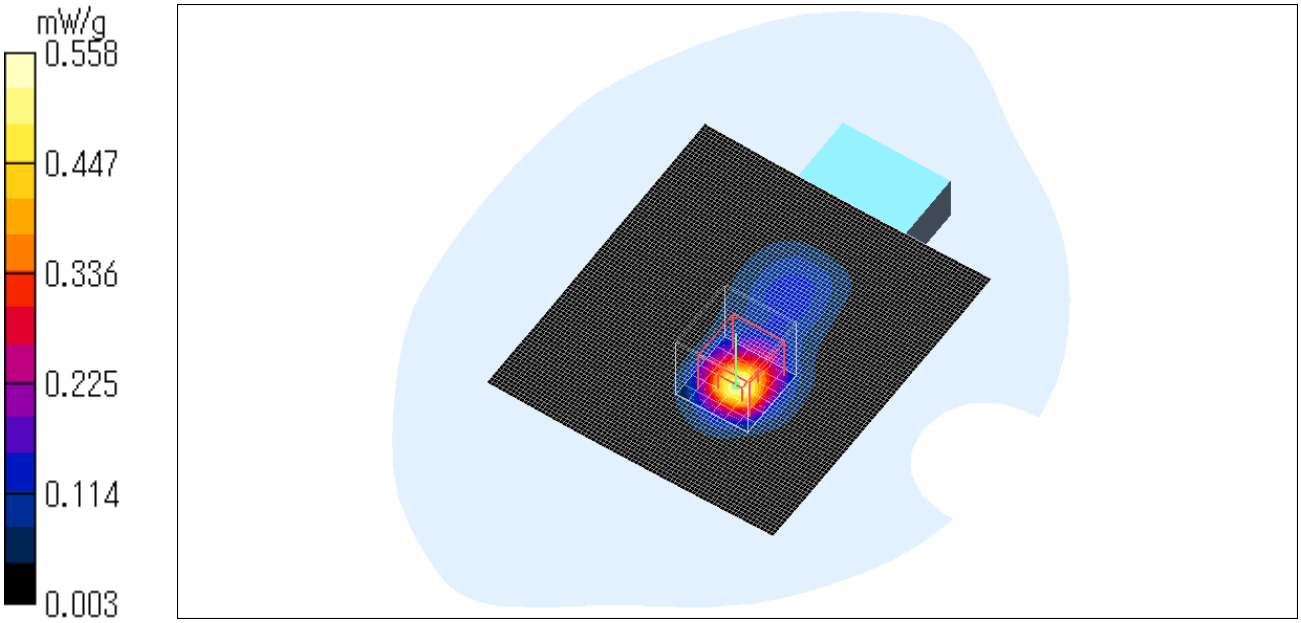

KX-WPA100(Hand Unit) / Body / Front / Ant.1 / 2412MHz / 11b DBPSK (1Mbps)

Crest factor: 1
Medium parameters used: f = 2450 MHz; σ = 1.97 mho/m; ε_r = 50.3; ρ = 1000 kg/m^3
Phantom section: Flat Section
Measurement Standard: DASY4 (High Precision Assessment)

DASY4 Configuration:
Probe: EX3DV3 - SN3507; ConvF(8.24, 8.24, 8.24); Calibrated: 2006/05/26
Sensor-Surface: 2mm (Mechanical Surface Detection)Sensor-Surface: 0mm (Fix Surface)
Electronics: DAE3 Sn509; Calibrated: 2006/06/15
Phantom: SAM 1196
Measurement SW: DASY4, V4.6 Build 23; Postprocessing SW: SEMCAD, V1.8 Build 160

Area Scan (81x91x1): Measurement grid: dx=15mm, dy=15mm
Maximum value of SAR (interpolated) = 0.735 mW/g

Zoom Scan (7x7x7)/Cube 0: Measurement grid: dx=5mm, dy=5mm, dz=5mm
Reference Value = 11.3 V/m; Power Drift = 0.182 dB
Peak SAR (extrapolated) = 0.931 W/kg
SAR(1 g) = 0.488 mW/g; SAR(10 g) = 0.225 mW/g
Maximum value of SAR (measured) = 0.746 mW/g

Z Scan (1x1x31): Measurement grid: dx=20mm, dy=20mm, dz=5mm
Maximum value of SAR (measured) = 0.202 mW/g

Test Date = 08/01/06
Ambient Temperature = 25.0 degree C.
Liquid Temperature = Before 24.1 degree C. , After 24.1 degree C.

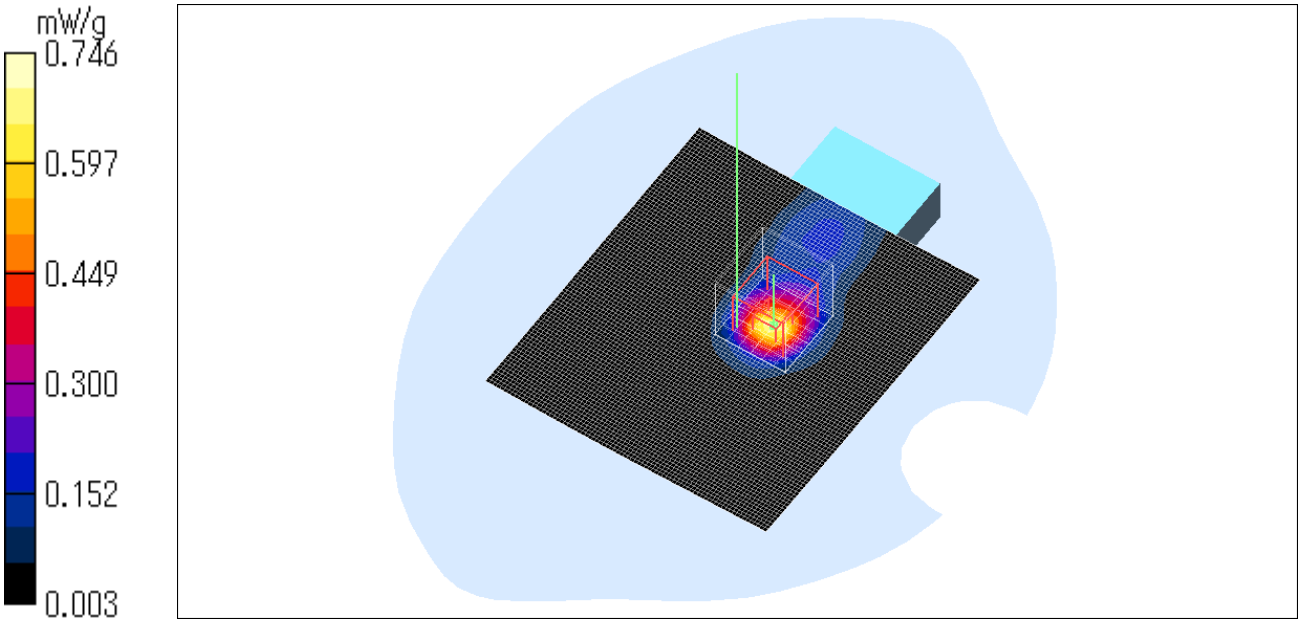

KX-WPA100(Hand Unit) / Body / Front / Ant.1 / 2462MHz / 11b DBPSK (1Mbps)

Crest factor: 1
Medium parameters used: f = 2450 MHz; σ = 1.97 mho/m; ε_r = 50.3; ρ = 1000 kg/m^3
Phantom section: Flat Section
Measurement Standard: DASY4 (High Precision Assessment)

DASY4 Configuration:
Probe: EX3DV3 - SN3507; ConvF(8.24, 8.24, 8.24); Calibrated: 2006/05/26
Sensor-Surface: 2mm (Mechanical Surface Detection)
Electronics: DAE3 Sn509; Calibrated: 2006/06/15
Phantom: SAM 1196
Measurement SW: DASY4, V4.6 Build 23; Postprocessing SW: SEMCAD, V1.8 Build 160

Area Scan (81x91x1): Measurement grid: dx=15mm, dy=15mm
Maximum value of SAR (interpolated) = 0.811 mW/g

Zoom Scan (7x7x7)/Cube 0: Measurement grid: dx=5mm, dy=5mm, dz=5mm
Reference Value = 12.0 V/m; Power Drift = -0.128 dB
Peak SAR (extrapolated) = 1.00 W/kg

SAR(1 g) = 0.512 mW/g; SAR(10 g) = 0.236 mW/g
Maximum value of SAR (measured) = 0.751 mW/g

Test Date = 08/01/06
Ambient Temperature = 25.0 degree C.
Liquid Temperature = Before 24.1 degree C. , After 24.1 degree C.

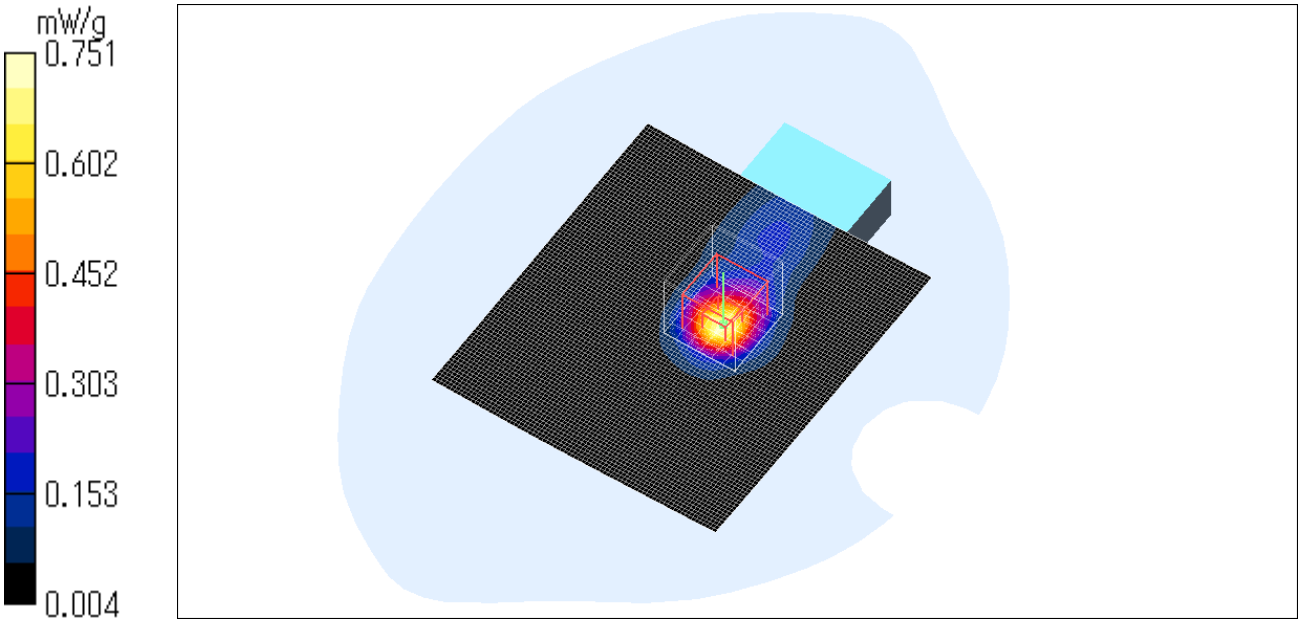

KX-WPA100(Hand Unit) / Body / Front / Ant.1 / 2437MHz / 11g BPSK (6Mbps)

Crest factor: 1.1
Medium parameters used: f = 2450 MHz; σ = 2.01 mho/m; ε_r = 50.1; ρ = 1000 kg/m^3
Phantom section: Flat Section
Measurement Standard: DASY4 (High Precision Assessment)

DASY4 Configuration:
Probe: EX3DV3 - SN3507; ConvF(8.24, 8.24, 8.24); Calibrated: 2006/05/26
Sensor-Surface: 2mm (Mechanical Surface Detection)
Electronics: DAE3 Sn509; Calibrated: 2006/06/15
Phantom: SAM 1196
Measurement SW: DASY4, V4.6 Build 23; Postprocessing SW: SEMCAD, V1.8 Build 160

Area Scan (81x91x1): Measurement grid: dx=15mm, dy=15mm
Maximum value of SAR (interpolated) = 0.421 mW/g

Zoom Scan (7x7x7)/Cube 0: Measurement grid: dx=5mm, dy=5mm, dz=5mm
Reference Value = 10.4 V/m; Power Drift = 0.051 dB
Peak SAR (extrapolated) = 0.623 W/kg
SAR(1 g) = 0.317 mW/g; SAR(10 g) = 0.146 mW/g
Maximum value of SAR (measured) = 0.459 mW/g

Test Date = 08/02/06
Ambient Temperature = 25.0 degree C.
Liquid Temperature = Before 23.9 degree C. , After 24.0 degree C.

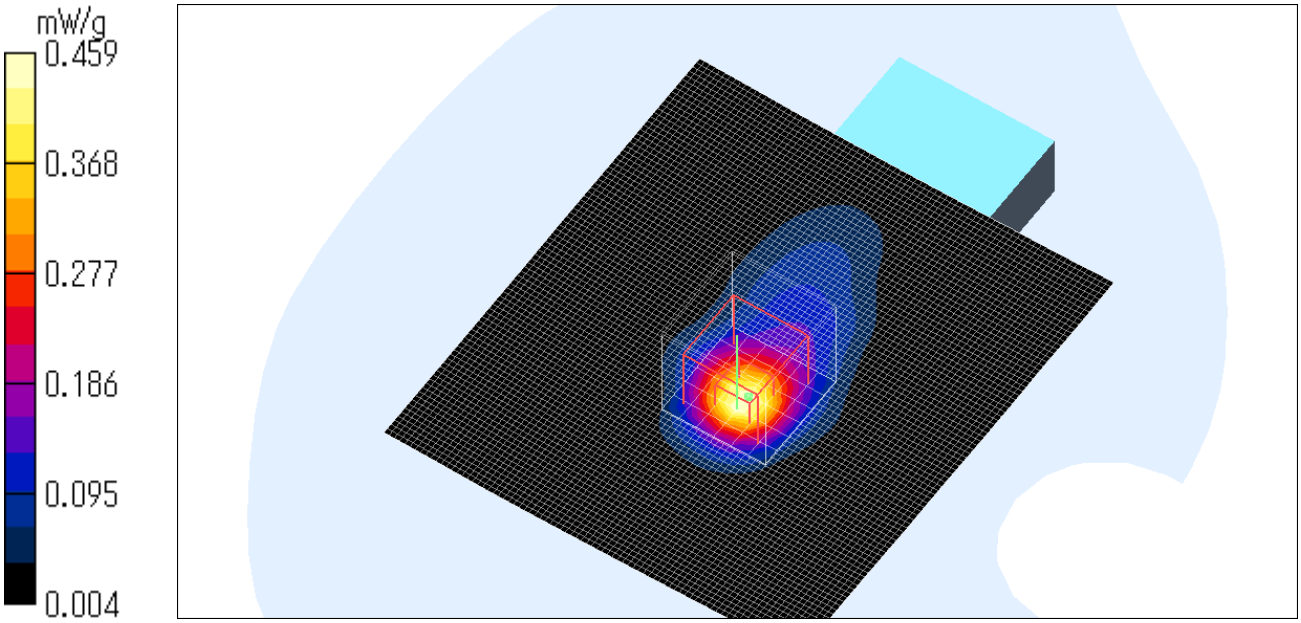

KX-WPA100(Hand Unit) / Body / Back / Ant.1 / 2437MHz / 11g BPSK (6Mbps)

Crest factor: 1.1
Medium parameters used: f = 2450 MHz; σ = 2.01 mho/m; ε_r = 50.1; ρ = 1000 kg/m^3
Phantom section: Flat Section
Measurement Standard: DASY4 (High Precision Assessment)

DASY4 Configuration:
Probe: EX3DV3 - SN3507; ConvF(8.24, 8.24, 8.24); Calibrated: 2006/05/26
Sensor-Surface: 2mm (Mechanical Surface Detection)
Electronics: DAE3 Sn509; Calibrated: 2006/06/15
Phantom: SAM 1196
Measurement SW: DASY4, V4.6 Build 23; Postprocessing SW: SEMCAD, V1.8 Build 160

Area Scan (81x91x1): Measurement grid: dx=15mm, dy=15mm
Maximum value of SAR (interpolated) = 0.360 mW/g

Zoom Scan (7x7x7)/Cube 0: Measurement grid: dx=5mm, dy=5mm, dz=5mm
Reference Value = 11.9 V/m; Power Drift = -0.217 dB
Peak SAR (extrapolated) = 0.563 W/kg
SAR(1 g) = 0.242 mW/g; SAR(10 g) = 0.111 mW/g
Maximum value of SAR (measured) = 0.380 mW/g

Test Date = 08/02/06
Ambient Temperature = 25.0 degree C.
Liquid Temperature = Before 24.0 degree C. , After 24.0 degree C.

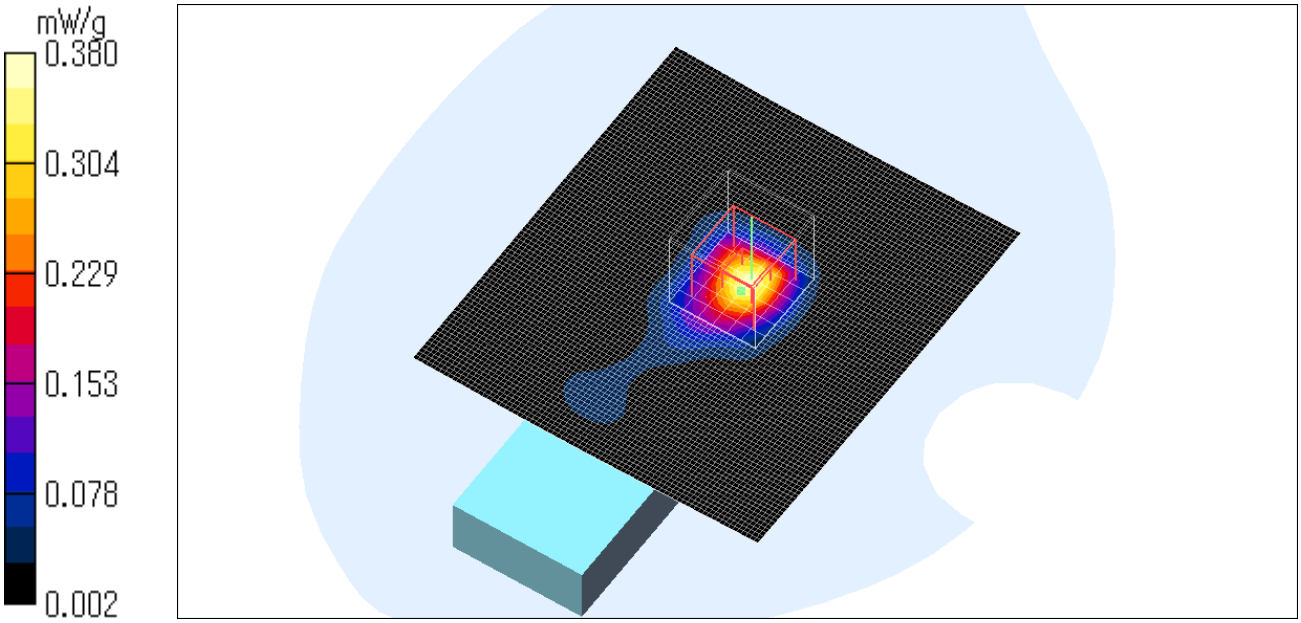

KX-WPA100(Hand Unit) / Body / Front / Ant.1 / 2437MHz / 11g QPSK (12Mbps)

Crest factor: 1.5
Medium parameters used: f = 2450 MHz; σ = 2.01 mho/m; ε_r = 50.1; ρ = 1000 kg/m^3
Phantom section: Flat Section
Measurement Standard: DASY4 (High Precision Assessment)

DASY4 Configuration:
Probe: EX3DV3 - SN3507; ConvF(8.24, 8.24, 8.24); Calibrated: 2006/05/26
Sensor-Surface: 2mm (Mechanical Surface Detection)
Electronics: DAE3 Sn509; Calibrated: 2006/06/15
Phantom: SAM 1196
Measurement SW: DASY4, V4.6 Build 23; Postprocessing SW: SEMCAD, V1.8 Build 160

Area Scan (81x91x1): Measurement grid: dx=15mm, dy=15mm
Maximum value of SAR (interpolated) = 0.388 mW/g

Zoom Scan (7x7x7)/Cube 0: Measurement grid: dx=5mm, dy=5mm, dz=5mm
Reference Value = 7.47 V/m; Power Drift = 0.218 dB
Peak SAR (extrapolated) = 0.476 W/kg
SAR(1 g) = 0.246 mW/g; SAR(10 g) = 0.113 mW/g
Maximum value of SAR (measured) = 0.368 mW/g

Test Date = 08/02/06
Ambient Temperature = 25.0 degree C.
Liquid Temperature = Before 24.0 degree C. , After 24.0 degree C.

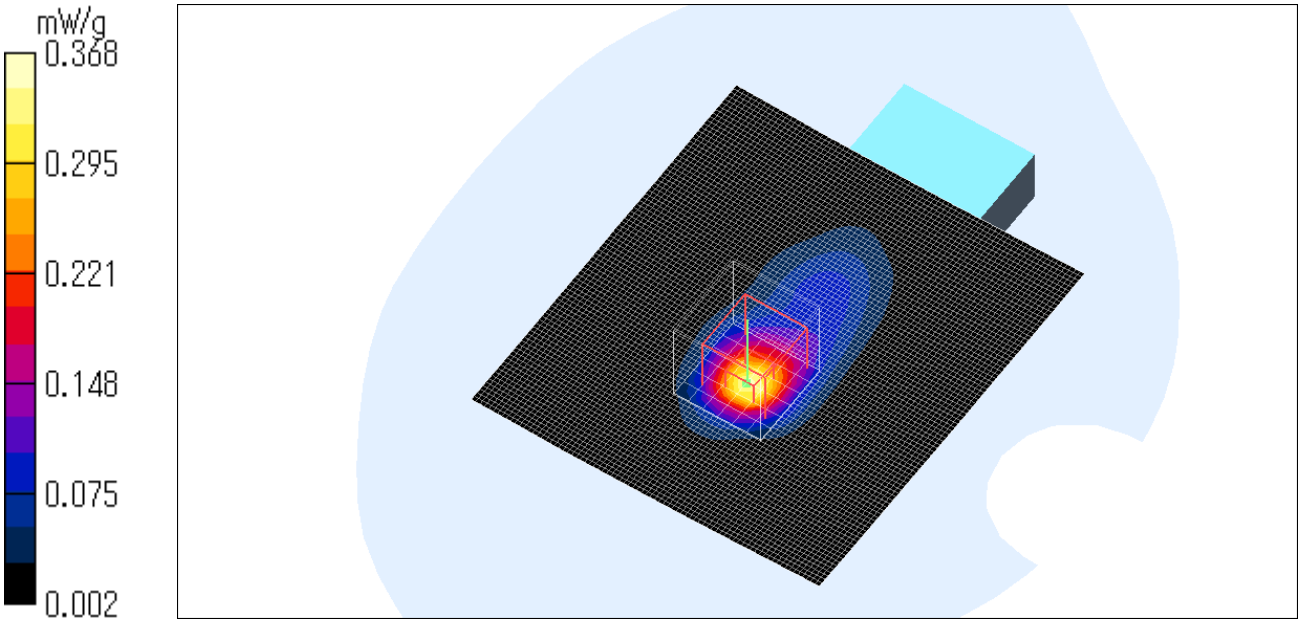

KX-WPA100(Hand Unit) / Body / Front / Ant.1 / 2437MHz / 11g 16QAM (24Mbps)

Crest factor: 2.6
Medium parameters used: f = 2450 MHz; σ = 2.01 mho/m; ε_r = 50.1; ρ = 1000 kg/m^3
Phantom section: Flat Section
Measurement Standard: DASY4 (High Precision Assessment)

DASY4 Configuration:
Probe: EX3DV3 - SN3507; ConvF(8.24, 8.24, 8.24); Calibrated: 2006/05/26
Sensor-Surface: 2mm (Mechanical Surface Detection)
Electronics: DAE3 Sn509; Calibrated: 2006/06/15
Phantom: SAM 1196
Measurement SW: DASY4, V4.6 Build 23; Postprocessing SW: SEMCAD, V1.8 Build 160

Area Scan (81x91x1): Measurement grid: dx=15mm, dy=15mm
Maximum value of SAR (interpolated) = 0.180 mW/g

Zoom Scan (7x7x7)/Cube 0: Measurement grid: dx=5mm, dy=5mm, dz=5mm
Reference Value = 6.91 V/m; Power Drift = -0.008 dB
Peak SAR (extrapolated) = 0.251 W/kg
SAR(1 g) = 0.128 mW/g; SAR(10 g) = 0.059 mW/g
Maximum value of SAR (measured) = 0.184 mW/g

Test Date = 08/02/06
Ambient Temperature = 25.0 degree C.
Liquid Temperature = Before 24.0 degree C. , After 24.0 degree C.

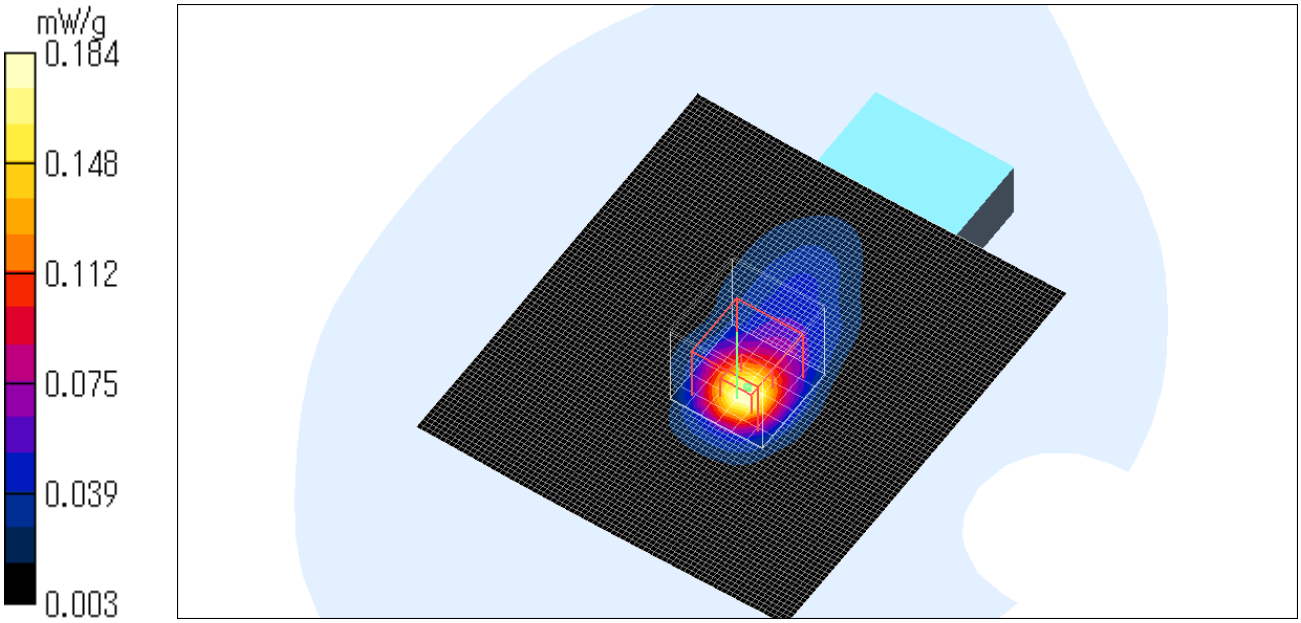

KX-WPA100(Hand Unit) / Body / Front / Ant.1 / 2437MHz / 11g 64QAM (48Mbps)

Crest factor: 5.7
Medium parameters used: f = 2450 MHz; σ = 2.01 mho/m; ε_r = 50.1; ρ = 1000 kg/m^3
Phantom section: Flat Section
Measurement Standard: DASY4 (High Precision Assessment)

DASY4 Configuration:
Probe: EX3DV3 - SN3507; ConvF(8.24, 8.24, 8.24); Calibrated: 2006/05/26
Sensor-Surface: 2mm (Mechanical Surface Detection)
Electronics: DAE3 Sn509; Calibrated: 2006/06/15
Phantom: SAM 1196
Measurement SW: DASY4, V4.6 Build 23; Postprocessing SW: SEMCAD, V1.8 Build 160

Area Scan (81x91x1): Measurement grid: dx=15mm, dy=15mm
Maximum value of SAR (interpolated) = 0.097 mW/g

Zoom Scan (7x7x7)/Cube 0: Measurement grid: dx=5mm, dy=5mm, dz=5mm
Reference Value = 4.96 V/m; Power Drift = 0.003 dB
Peak SAR (extrapolated) = 0.126 W/kg
SAR(1 g) = 0.063 mW/g; SAR(10 g) = 0.029 mW/g
Maximum value of SAR (measured) = 0.095 mW/g

Test Date = 08/02/06
Ambient Temperature = 25.0 degree C.
Liquid Temperature = Before 24.0 degree C. , After 24.0 degree C.

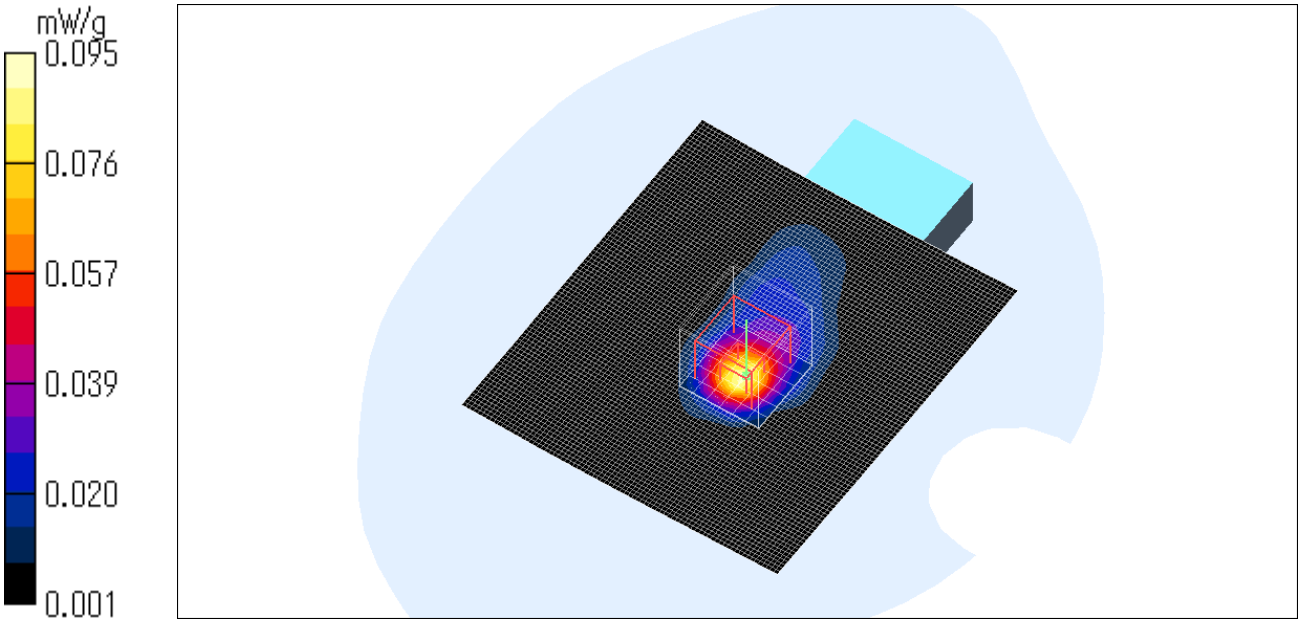

KX-WPA100(Hand Unit) / Body / Front / Ant.1 / 2412MHz / 11g BPSK (6Mbps)

Crest factor: 1.1
Medium parameters used: f = 2450 MHz; σ = 2.01 mho/m; ε_r = 50.1; ρ = 1000 kg/m^3
Phantom section: Flat Section
Measurement Standard: DASY4 (High Precision Assessment)

DASY4 Configuration:
Probe: EX3DV3 - SN3507; ConvF(8.24, 8.24, 8.24); Calibrated: 2006/05/26
Sensor-Surface: 2mm (Mechanical Surface Detection)
Electronics: DAE3 Sn509; Calibrated: 2006/06/15
Phantom: SAM 1196
Measurement SW: DASY4, V4.6 Build 23; Postprocessing SW: SEMCAD, V1.8 Build 160

Area Scan (81x91x1): Measurement grid: dx=15mm, dy=15mm
Maximum value of SAR (interpolated) = 0.352 mW/g

Zoom Scan (7x7x7)/Cube 0: Measurement grid: dx=5mm, dy=5mm, dz=5mm
Reference Value = 9.68 V/m; Power Drift = -0.196 dB
Peak SAR (extrapolated) = 0.527 W/kg
SAR(1 g) = 0.281 mW/g; SAR(10 g) = 0.130 mW/g
Maximum value of SAR (measured) = 0.410 mW/g

Test Date = 08/02/06
Ambient Temperature = 25.0 degree C.
Liquid Temperature = Before 24.0 degree C. , After 24.0 degree C.

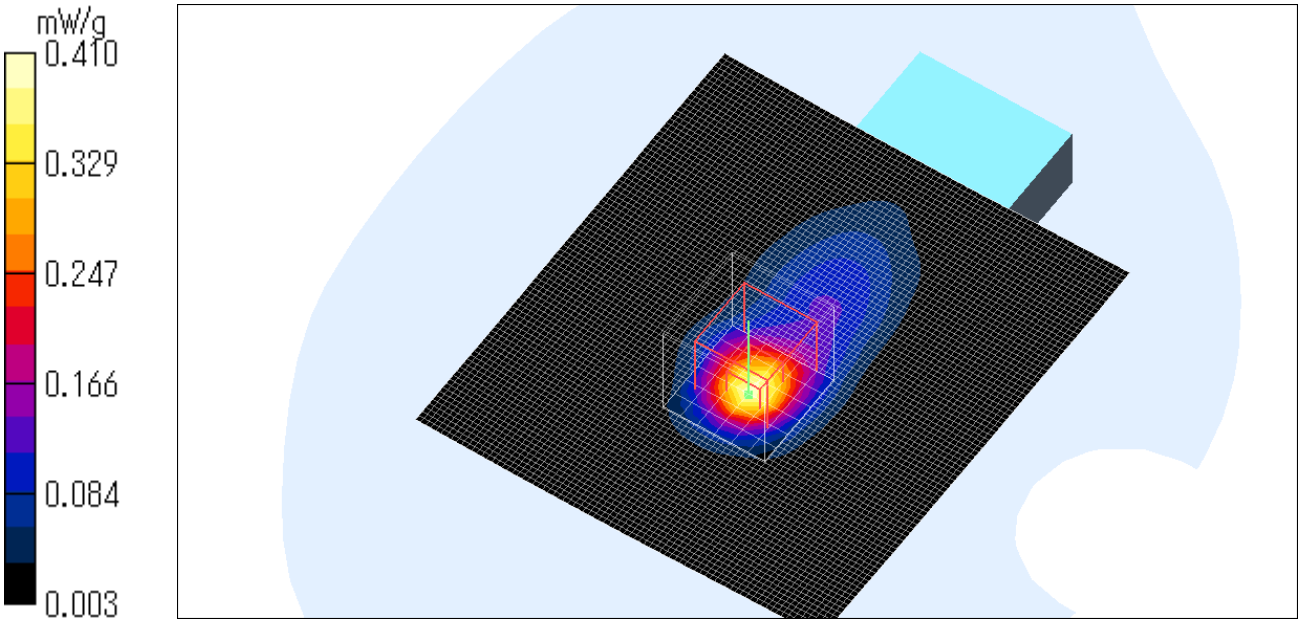

KX-WPA100(Hand Unit) / Body / Front / Ant.1 / 2462MHz / 11g BPSK (6Mbps)

Crest factor: 1.1
Medium parameters used: f = 2450 MHz; σ = 2.01 mho/m; ε_r = 50.1; ρ = 1000 kg/m^3
Phantom section: Flat Section
Measurement Standard: DASY4 (High Precision Assessment)

DASY4 Configuration:
Probe: EX3DV3 - SN3507; ConvF(8.24, 8.24, 8.24); Calibrated: 2006/05/26
Sensor-Surface: 2mm (Mechanical Surface Detection)
Electronics: DAE3 Sn509; Calibrated: 2006/06/15
Phantom: SAM 1196
Measurement SW: DASY4, V4.6 Build 23; Postprocessing SW: SEMCAD, V1.8 Build 160

Area Scan (81x91x1): Measurement grid: dx=15mm, dy=15mm
Maximum value of SAR (interpolated) = 0.382 mW/g

Zoom Scan (7x7x7)/Cube 0: Measurement grid: dx=5mm, dy=5mm, dz=5mm
Reference Value = 9.95 V/m; Power Drift = 0.068 dB
Peak SAR (extrapolated) = 0.619 W/kg
SAR(1 g) = 0.307 mW/g; SAR(10 g) = 0.141 mW/g
Maximum value of SAR (measured) = 0.472 mW/g
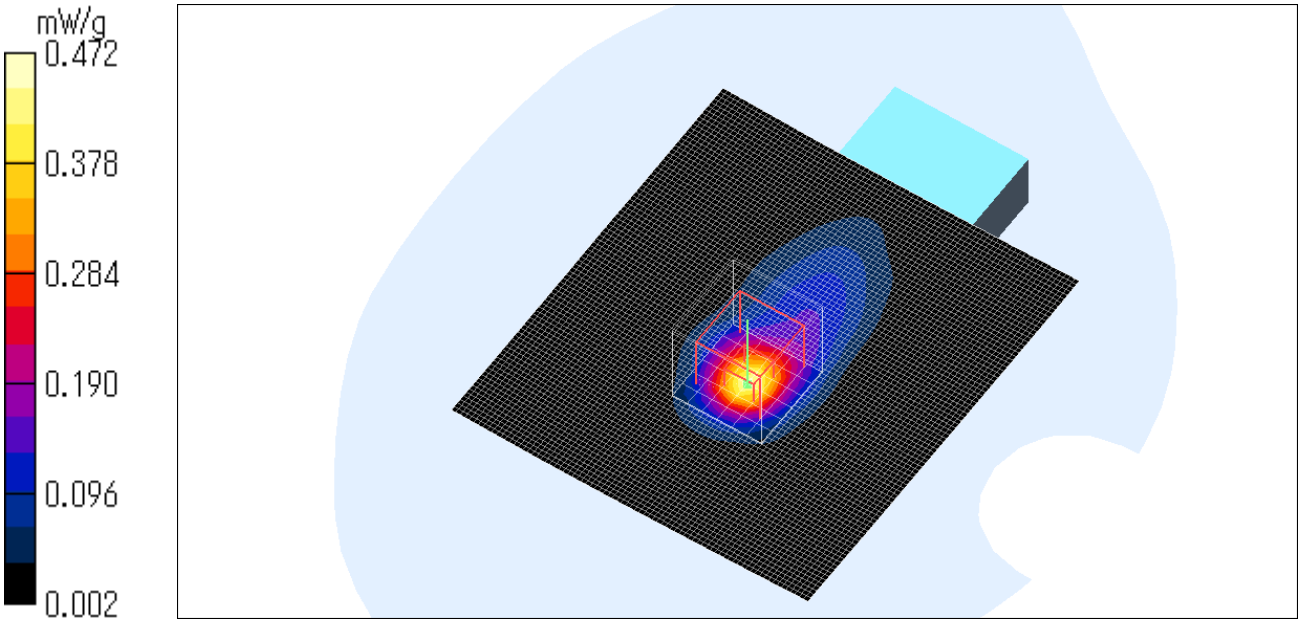
Test Date = 08/02/06
Ambient Temperature = 25.0 degree C.
Liquid Temperature = Before 24.0 degree C. , After 24.0 degree C.