SAR TEST REPORT

Test Report No. : 11500824H-E-R1

Applicant	:	**Panasonic Corporation of North America**
Type of Equipment	:	**Body Worn Camera**
Model No.	:	**WV-TW370**
FCC ID	:	**ACJ9TAWV-TW370**
Test regulation	:	**FCC47CFR 2.1093**
Test Result	:	**Complied**
Reported SAR(1g) Value		**The highest reported SAR(1g)** Body : 1.21 W/kg Body-worn accessory : < 0.10 W/kg

1. This test report shall not be reproduced in full or partial, without the written approval of UL Japan, Inc.
2. The results in this report apply only to the sample tested.
3. This sample tested is in compliance with the limits of the above regulation.
4. The test results in this report are traceable to the national or international standards.
5. This test report must not be used by the customer to claim product certification, approval, or endorsement by NVLAP, NIST, or any agency of the Federal Government.
6. This test report covers SAR technical requirements. It does not cover administrative issues such as Manual or non-SAR test related Requirements. (if applicable)
7. This report is a revised version of 11500824H-E. 11500824H-E is replaced with this report.

Date of test: November 28 to December1, 2016

Representative test engineer: T. Nakagawa
Tomohisa Nakagawa
Engineer
Consumer Technology Division

Approved by : T. Hatakeda
Takahiro Hatakeda
Leader
Consumer Technology Division

NVLAP TESTING
NVLAP LAB CODE: 200572-0

This laboratory is accredited by the NVLAP LAB CODE 200572-0, U.S.A. The tests reported herein have been performed in accordance with its terms of accreditation.
*As for the range of Accreditation in NVLAP, you may refer to the WEB address,
http://japan.ul.com/resources/emc_accredited/

REVISION HISTORY

Original Test Report No.: 11500824H-E-R1

Revision	Test report No.	Date	Page revised	Contents
- (Original)	11500824H-E	December 27, 2016	-	-
1	11500824H-E-R1	February 2, 2017	P11	Correction of Power setting for WLAN.
1	11500824H-E-R1	February 2, 2017	P23	Note 5 of Section 12, Clause 12.1 was added.

CONTENTS PAGE

SECTION1: Customer information **4**
SECTION2: Equipment under test (E.U.T.) **4**
2.1 Identification of E.U.T. 4
2.2 Product description 4
SECTION3: Test standard information **6**
3.1 Test Specification 6
3.2 Procedure 6
3.3 Exposure limit 7
3.4 Test Location 7
SECTION4: Test result **8**
4.1 Stand-alone SAR result 8
SECTION5: RF Exposure Conditions (Test Configurations) **9**
5.1 SAR test exclusion considerations according to KDB447498 D01 9
SECTION6: Description of the operating mode **11**
6.1 Output power operating modes 11
6.2 Output Power and SAR initial test configuration 12
6.3 SAR testing operating modes 14
SECTION7: Description of the Body setup **15**
7.1 Procedure for SAR testing 15
7.2 Test position for Body setup 15
7.3 Test position for Body-worn accessory setup 15
SECTION8: Test surrounding **16**
8.1 Measurement uncertainty 16
SECTION9: Parameter Check **18**
SECTION10: System Check confirmation **21**
SECTION11: SAR Test data for WLAN 2.4GHz band **22**
11.1 Result of Body 2.4GHz SAR 22
SECTION12: SAR Test data for WLAN 5GHz band **23**
12.1 Result of Body 5.3GHz SAR 23
12.2 Result of Body 5.5GHz SAR 25
12.3 Result of Body 5.8GHz SAR 27
SECTION13: SAR Test data for Body-worn accessory **28**
13.1 Result of Body-worn accessory 28
SECTION14: Repeated measurement **29**
SECTION15: Test instruments **30**
APPENDIX 1 : SAR Measurement data **31**
Evaluation procedure 31
2.4GHz Measurement data 33
5.3GHz Measurement data 40
5.5GHz Measurement data 52
5.8GHz Measurement data 63
Body-worn accessory Measurement data 73
Repeated Measurement data 76
APPENDIX 2 : System Check **79**
System check result Body 2450MHz 79
System check result Body 5250MHz 81
System check result Body 5600MHz 83
System check result Body 5750MHz 85
APPENDIX 3 : System specifications **87**
Configuration and peripherals 87
Specifications 88
System Check Dipole SAR Calibration Certificate -Dipole 2450MHz(D2450V2,S/N:854) 92
System Check Dipole SAR Calibration Certificate -Dipole 5GHz(D5GHzV2,S/N:1020) 100
Dosimetric E-Field Probe Calibration Certificate (EX3DV4, S/N: 3745) 117
System check uncertainty 128
APPENDIX 4 : Photographs of test setup **130**
Photographs of EUT 130
Antenna position 132
Photographs of setup 133

SECTION1: Customer information

Applicant

Company Name	:	Panasonic Corporation of North America
Address	:	Two Riverfront Plaza, Newark, NJ 07102-5490
Telephone Number	:	+1-201-348-7724
Facsimile Number	:	+1-201-392-4564
Contact Person	:	Vir Angelo Lontoc

Manufacturer

Company Name	:	Panasonic System Networks Co., Ltd.
Address	:	4-1-62, Minoshima, Hakata-ku, Fukuoka 812-8531, Japan
Telephone Number	:	+81-50-3380-1993
Facsimile Number	:	+81-50-3380-2002
Contact Person	:	Yukio Kaneko

*Remarks:
Panasonic Corporation of North America designates Panasonic System Networks Co., Ltd. as manufacturer of the product (Body Worn Camera).

SECTION2: Equipment under test (E.U.T.)

2.1 Identification of E.U.T.

Type of Equipment	:	Body Worn Camera
Model No.	:	WV-TW370
Serial No.	:	37 121
Rating	:	DC 3.7 V
Option battery	:	None
Body-worn accessory	:	Belt clip (3 types)
Receipt Date of Sample	:	November 8, 2016
Country of Mass-production	:	Japan
Condition of EUT	:	Engineering prototype (Not for Sale: This sample is equivalent to mass-produced items.)
Modification of EUT	:	No Modification by the test lab

2.2 Product description

Model: WV-TW370 (referred to as the EUT in this report) is a Body Worn Camera.

General Specification

Radio Type	:	Transceiver
Power Supply (inner)	:	DC3.7V (POWER), DC1.8V (IO)
Clock frequency (crysstal)	:	37.4 MHz

Radio Specification

	IEEE802.11b	IEEE802.11g/n (20 M band)	IEEE802.11a/n/ac (20 M band)	IEEE802.11n/ac (40 M band)	IEEE802.11ac (80 M band)
Frequency of operation	2412 MHz to 2462 MHz	2412 MHz to 2462 MHz	5280 MHz to 5320 MHz 5500 MHz to 5580 MHz 5660 MHz to 5720 MHz 5745 MHz to 5825 MHz	5310 MHz 5510 MHz 5550 MHz 5670 MHz 5710 MHz 5755 MHz 5795 MHz	5530 MHz 5690 MHz 5775 MHz
Type of modulation	DSSS (CCK, DQPSK, DBPSK)	OFDM-CCK (64QAM, 16QAM, QPSK, BPSK)	OFDM (64QAM, 16QAM, QPSK, BPSK, 256QAM(IEEE802.11ac only))		
Channel spacing	5MHz		20MHz	40MHz	80MHz
Antenna type	Chip antenna				
Antenna Connector type	-				
Antenna Gain	-1.85 dBi (2.4 GHz Band) 0.3 dBi (5 GHz Band)				

	Bluetooth Ver.4.1 with EDR function / Bluetooth Low Energy
Frequency of operation	2402 MHz - 2480 MHz
Type of modulation	BT: FHSS (GFSK, π/4-DQPSK, 8-DPSK) LE: GFSK
Channel spacing	BT: 1 MHz LE: 2 MHz
Antenna type	Chip antenna
Antenna Connector type	-
Antenna Gain	-1.85 dBi

*Wireless LAN and Bluetooth do not transmit simultaneously.

SECTION3: Test standard information

3.1 Test Specification

Title : **FCC47CFR 2.1093**
Radiofrequency radiation exposure evaluation: portable devices.
: **IEEE Std 1528-2013:**
IEEE Recommended Practice for Determining the Peak Spatial-Average Specific Absorption Rate (SAR) in the Human Head from Wireless Communications Devices: Measurement Techniques.

: **Published RF exposure KDB procedures**

☑	**KDB447498D01(v06)**	Mobile and Portable Device RF Exposure Procedures and Equipment Authorization Policies
☐	**KDB447498D02(v02r01)**	SAR Measurement Procedures for USB Dongle Transmitters
☐	**KDB648474D04(v01r03)**	SAR Evaluation Considerations for Wireless Handsets
☐	**KDB941225D01(v03r01)**	3G SAR MEASUREMENT PROCEDURES
☐	**KDB941225D05(v02r05)**	SAR for LTE Devices
☐	**KDB941225D06(v02r01)**	SAR test procedures for devices incorporating SAR Evaluation Procedures for Portable Devices with Wireless Router Capabilities (Hot Spot SAR)
☐	**KDB941225D07(v01r02)**	SAR Evaluation Procedures for UMPC Mini-Tablet Devices
☐	**KDB616217D04(v01r02)**	SAR Evaluation Considerations for Laptop, Notebook, Netbook and Tablet Computers
☑	**KDB865664D01(v01r04)**	SAR Measurement Requirements for 100MHz to 6 GHz
☑	**KDB248227D01(v02r02)**	SAR Measurement Procedures for 802.11(Wi-Fi) Transmitters

Reference
[1]SPEAG uncertainty document (AN 15-7/AN19-17) for DASY 5 System from SPEAG (Schmid & Partner Engineering AG).

3.2 Procedure

Transmitter	**WLAN and Bluetooth**
Test Procedure	Published RF exposure KDB procedures
Category	FCC47CFR 2.1093
Note: UL Japan, Inc. 's SAR Work Procedures 13-EM-W0429 and 13-EM-W0430	

3.3 Exposure limit

(A) Limits for Occupational/Controlled Exposure (W/kg)

Spatial Average (averaged over the whole body)	Spatial Peak (averaged over any 1g of tissue)	Spatial Peak (hands/wrists/feet/ankles averaged over 10g)
0.4	8.0	20.0

(B) Limits for General population/Uncontrolled Exposure (W/kg)

Spatial Average (averaged over the whole body	Spatial Peak (averaged over any 1g of tissue)	Spatial Peak (hands/wrists/feet/ankles averaged over 10g)
0.08	1.6	4.0

Occupational/Controlled Environments: are defined as locations where there is exposure that may be incurred by people who are aware of the potential for exposure, (i.e. as a result of employment or occupation).

General Population/Uncontrolled Environments: are defined as locations where there is the exposure of individuals who have no knowledge or control of their exposure.

NOTE:GENERAL POPULATION/UNCONTROLLED EXPOSURE
SPATIAL PEAK(averaged over any 1g of tissue) LIMIT
1.6 W/kg

3.4 Test Location

*Shielded room for SAR testings
UL Japan, Inc. Ise EMC Lab. *NVLAP Lab. code: 200572-0
4383-326 Asama-cho, Ise-shi, Mie-ken 516-0021 JAPAN
Telephone : +81 596 24 8999 Facsimile : +81 596 24 8124

SECTION4: Test result

4.1 Stand-alone SAR result

Reported SAR

Measured SAR is scaled to the maximum tune-up tolerance limit by the following formulas.
Reported SAR= Measured SAR [W/kg] · Scaled factor *1
Maximum tune-up tolerance limit is by the specification from a customer.

Body SAR

Mode	Frequency [MHz]	Maximum tune-up tolerance limit [dBm]*3	Maximum tune-up tolerance limit [mW]*3	Measured power [dBm]*2	Measured power [mW]	Measured SAR [W/kg]	Scaled factor	**Reported SAR [W/kg]**
WLAN11b	2412	18.00	63.10	17.65	58.21	0.211	1.084	**0.229**
WLAN11a	5320	11.00	12.59	10.02	10.05	0.969	1.253	**1.214**
WLAN11a	5700	11.00	12.59	10.61	11.51	0.989	1.094	**1.082**
WLAN11a	5785	11.00	12.59	10.59	11.46	0.947	1.099	**1.041**

Body-worn accessory

Mode	Frequency [MHz]	Maximum tune-up tolerance limit [dBm]*3	Maximum tune-up tolerance limit [mW]*3	Measured power (Burst power) [dBm]*2	Measured power (Burst power) [mW]	Measured SAR [W/kg]	Scaled factor	**Reported SAR [W/kg]**
WLAN11a	5745	11.00	12.59	10.76	11.91	0.054	1.057	**0.057**

Note
*1 Scaled factor = Maximum tune-up tolerance limit [mW] / Measured power [mW]
*2 The sample used by the SAR test is not more than 2 dB lower than the maximum tune-up tolerance limit. That is, measured power is included the tune-up tolerance range.

Maximum tune-up tolerance limit

Mode	Band	Maximum tune-up tolerance limit [dBm]	Maximum tune-up tolerance limit [mW]
BT BDR L/Mch	2.4GHz	5.00	3.16
BT BDR Hch	2.4GHz	3.00	2.00
BT EDR L/Mch	2.4GHz	-1.00	0.79
BT EDR Hch	2.4GHz	-2.00	0.63
BT LE L/Mch	2.4GHz	2.00	1.58
BT LE Hch	2.4GHz	0.00	1.00
WLAN 11b	2.4GHz	18.00	63.10
WLAN 11g n20	2.4GHz	14.00	25.12
WLAN 11a	5GHz	11.00	12.59
WLAN 11n ac20 ac40	5GHz	10.50	11.22
WLAN 11ac80	5GHz	10.00	10.00

SECTION5: RF Exposure Conditions (Test Configurations)

5.1 SAR test exclusion considerations according to KDB447498 D01

The following is based on KDB447498D01.
1) The 1-g and 10-g SAR test exclusion thresholds for 100 MHz to 6 GHz at test separation distances ≤ 50 mm are determined by:
[(max. power of channel, including tune-up tolerance, mW)/(min. test separation distance, mm)] ·[√f(GHz)] ≤ 3.0 for 1-g SAR and ≤ 7.5 for 10-g extremity SAR

When the minimum test separation distance is < 5 mm, a distance of 5 mm is applied to determine SAR test exclusion. When the separation of antenna to EUT's surfaces and edges are ≤ 50 mm, the separation distance used for the SAR exclusion calculations is 5 mm.

When the calculated threshold value by a numerical formula above-mentioned in the following table is 3.0 or less, SAR test is excluded.

SAR exclusion calculations for antenna <50mm from the user

Antenna	Tx Interface	Frequency (MHz)	Output Power		Separation Distances (mm)					Calculated Threshold Value				
			dBm	mW	Top	Bottom	Right	Left	Left tilt	Top	Bottom	Right	Left	Left tilt
Main	BT BDR	2480	5.00	3	26	53	60	9	9	0.9 -EXEMPT-	-	-	0.9 -EXEMPT-	0.9 -EXEMPT-
Main	BT EDR	2480	-1.00	1	26	53	60	9	9	0.3 -EXEMPT-	-	-	0.3 -EXEMPT-	0.3 -EXEMPT-
Main	BT LE	2480	2.00	2	26	53	60	9	9	0.6 -EXEMPT-	-	-	0.6 -EXEMPT-	0.6 -EXEMPT-
Main	11b	2462	18.00	63	26	53	60	9	9	19.8 -MEASURE-	-	-	19.8 -MEASURE-	19.8 -MEASURE-
Main	11g n 20	2462	14.00	25	26	53	60	9	9	7.8 -MEASURE-	-	-	7.8 -MEASURE-	7.8 -MEASURE-
Main	11a	5825	11.00	13	26	53	60	9	9	6.3 -MEASURE-	-	-	6.3 -MEASURE-	6.3 -MEASURE-
Main	11n ac 20	5825	10.50	11	26	53	60	9	9	5.3 -MEASURE-	-	-	5.3 -MEASURE-	5.3 -MEASURE-
Main	11n ac 40	5825	10.50	11	26	53	60	9	9	5.3 -MEASURE-	-	-	5.3 -MEASURE-	5.3 -MEASURE-
Main	11ac 80	5825	10.00	10	26	53	60	9	9	4.8 -MEASURE-	-	-	4.8 -MEASURE-	4.8 -MEASURE-

SAR exclusion calculations for antenna <50mm from the user

Antenna	Tx Interface	Frequency (MHz)	Output Power		Separation Distances (mm)				Calculated Threshold Value			
			dBm	mW	Front	Front tilt	Rear	Diagonal side	Front	Front tilt	Rear	Diagonal side
Main	BT BDR	2480	5.00	3	8	8	27	8	0.9 -EXEMPT-	0.9 -EXEMPT-	0.9 -EXEMPT-	0.9 -EXEMPT-
Main	BT EDR	2480	-1.00	1	8	8	27	8	0.3 -EXEMPT-	0.3 -EXEMPT-	0.3 -EXEMPT-	0.3 -EXEMPT-
Main	BT LE	2480	2.00	2	8	8	27	8	0.6 -EXEMPT-	0.6 -EXEMPT-	0.6 -EXEMPT-	0.6 -EXEMPT-
Main	11b	2462	18.00	63	8	8	27	8	19.8 -MEASURE-	19.8 -MEASURE-	19.8 -MEASURE-	19.8 -MEASURE-
Main	11g n 20	2462	14.00	25	8	8	27	8	7.8 -MEASURE-	7.8 -MEASURE-	7.8 -MEASURE-	7.8 -MEASURE-
Main	11a	5825	11.00	13	8	8	27	8	6.3 -MEASURE-	6.3 -MEASURE-	6.3 -MEASURE-	6.3 -MEASURE-
Main	11n ac 20	5825	10.50	11	8	8	27	8	5.3 -MEASURE-	5.3 -MEASURE-	5.3 -MEASURE-	5.3 -MEASURE-
Main	11n ac 40	5825	10.50	11	8	8	27	8	5.3 -MEASURE-	5.3 -MEASURE-	5.3 -MEASURE-	5.3 -MEASURE-
Main	11ac 80	5825	10.00	10	8	8	27	8	4.8 -MEASURE-	4.8 -MEASURE-	4.8 -MEASURE-	4.8 -MEASURE-

Notes:
1. The upper frequency of the frequency band was used in order to calculate standalone SAR test exclusion considerations.
2. Power and distance are rounded to the nearest mW and mm before calculation
3. The result is rounded to one decimal place for comparison

2) At 100 MHz to 6 GHz and for test separation distances > 50 mm, the SAR test exclusion threshold is determined according to the following.

a) [(3·50)/(√f(GHz))) + (test separation distance - 50 mm)·(f(MHz)/150)] mW at > 100 MHz and ≤ 1500 MHz

b) [(3·50)/(√f(GHz))) + (test separation distance - 50 mm)·10] mW at > 1500 MHz and ≤ 6 GHz

When output power is less than the calculated threshold value by a numerical formula above-mentioned in the following table, SAR test is excluded.

SAR exclusion calculations for antenna >50mm from the user

Antenna	Tx Interface	Frequency (MHz)	Output Power		Separation Distances (mm)					Calculated Threshold Value				
			dBm	mW	Top	Bottom	Right	Left	Left tilt	Top	Bottom	Right	Left	Left tilt
Main	BT BDR	2480	5.00	3	26	53	60	9	9	-	125.3 mW -EXEMPT-	197.3 mW -EXEMPT-	-	-
Main	BT EDR	2480	-1.00	1	26	53	60	9	9	-	125.3 mW -EXEMPT-	197.3 mW -EXEMPT-	-	-
Main	BT LE	2480	2.00	2	26	53	60	9	9	-	125.3 mW -EXEMPT-	197.3 mW -EXEMPT-	-	-
Main	11b	2462	18.00	63	26	53	60	9	9	-	125.6 mW -EXEMPT-	197.6 mW -EXEMPT-	-	-
Main	11g n 20	2462	14.00	25	26	53	60	9	9	-	125.6 mW -EXEMPT-	197.6 mW -EXEMPT-	-	-
Main	11a	5825	11.00	13	26	53	60	9	9	-	92.2 mW -EXEMPT-	164.2 mW -EXEMPT-	-	-
Main	11n ac 20	5825	10.50	11	26	53	60	9	9	-	92.2 mW -EXEMPT-	164.2 mW -EXEMPT-	-	-
Main	11n ac 40	5825	10.50	11	26	53	60	9	9	-	92.2 mW -EXEMPT-	164.2 mW -EXEMPT-	-	-
Main	11ac 80	5825	10.00	10	26	53	60	9	9	-	92.2 mW -EXEMPT-	164.2 mW -EXEMPT-	-	-

SAR exclusion calculations for antenna >50mm from the user

Antenna	Tx Interface	Frequency (MHz)	Output Power		Separation Distances (mm)				Calculated Threshold Value			
			dBm	mW	Front	Front tilt	Rear	Diagonal side	Front	Front tilt	Rear	Diagonal side
Main	BT BDR	2480	5.00	3	8	8	27	8	-	-	-	-
Main	BT EDR	2480	-1.00	1	8	8	27	8	-	-	-	-
Main	BT LE	2480	2.00	2	8	8	27	8	-	-	-	-
Main	11b	2462	18.00	63	8	8	27	8	-	-	-	-
Main	11g n 20	2462	14.00	25	8	8	27	8	-	-	-	-
Main	11a	5825	11.00	13	8	8	27	8	-	-	-	-
Main	11n ac 20	5825	10.50	11	8	8	27	8	-	-	-	-
Main	11n ac 40	5825	10.50	11	8	8	27	8	-	-	-	-
Main	11ac 80	5825	10.00	10	8	8	27	8	-	-	-	-

Notes:

1. The upper frequency of the frequency band was used in order to calculate standalone SAR test exclusion considerations.
2. Power and distance are rounded to the nearest mW and mm before calculation

SECTION6: Description of the operating mode

6.1 Output power operating modes

Mode	Frequency Band	Test Frequency	Modulation
Bluetooth	2402-2480MHz	2402MHz(0ch) 2441MHz(39ch) 2480MHz(78ch)	DH5,2DH5,3DH5
Bluetooth	2402-2480MHz	2402MHz(1ch) 2440MHz(19ch) 2480MHz(39ch)	LE
IEEE802.11b	2412-2462MHz	2412MHz (1ch) 2437MHz (6ch) 2462MHz (11ch)	DSSS (DBPSK.DQPSK.CCK)
IEEE802.11g IEEE802.11n20 (2.4G)	2412-2462MHz	2412MHz (1ch) 2437MHz (6ch) 2462MHz (11ch)	OFDM (BPSK, QPSK, 16QAM, 64QAM, 256QAM)
IEEE802.11a IEEE802.11n20 (5G) IEEE802.11ac20	5280-5320MHz	5280MHz (56ch)	
		5300MHz (60ch)	
		5320MHz (64ch)	
	5500-5720MHz	5500MHz (100ch)	
		5580MHz (116ch)	
		5700MHz (140ch)	
		5720MHz (142ch)	
	5745-5825MHz	5745MHz (149ch)	
		5785MHz (157ch)	
		5825MHz (165ch)	
IEEE802.11n40 (5G) IEEE802.11ac40	5310MHz	5310MHz (62ch)	
	5510-5710MHz	5510MHz (102ch)	
		5550MHz (110ch)	
		5670MHz (134ch)	
		5710MHz (142ch)	
	5755-5795MHz	5755MHz (151ch)	
		5795MHz (159ch)	
IEEE802.11ac80	5530-5690MHz 5775MHz	All channels	

Software setting
*The power value of the EUT was set for testing as follows (setting value might be different from product specification value); Power settings: WLAN: Same as production model BT LE: 2dBm EDR: -1dBm, BDR: 5dBm Software: bcm43455c0 (WLAN, BT LE) BLUETest3 (EDR/BDR) *This setting of software is the worst case. The test was performed with condition that obtained the maximum average power in pre-check. Any conditions under the normal use do not exceed the condition of setting. In addition, end users cannot change the settings of the output power of the product.

6.2 Output Power and SAR initial test configuration

According to KDB248227D01, The initial test configuration for 2.4 GHz and 5 GHz OFDM transmission modes is determined by the 802.11 configuration with the highest maximum output power specified for production units, including tune-up tolerance, in each standalone and aggregated frequency band. SAR for the initial test configuration is measured using the highest maximum output power channel determined by the default power measurement procedures. When multiple configurations in a frequency band have the same specified maximum output power, the initial test configuration is determined according to the following steps applied sequentially.

1. The largest channel bandwidth configuration is selected among the multiple configurations with the same specified maximum output power.
2. If multiple configurations have the same specified maximum output power and largest channel bandwidth, the lowest order modulation among the largest channel bandwidth configurations is selected.
3. If multiple configurations have the same specified maximum output power, largest channel bandwidth and lowest order modulation, the lowest data rate configuration among these configurations is selected.
4. When multiple transmission modes (802.11a/g/n/ac) have the same specified maximum output power, largest channel bandwidth, lowest order modulation and lowest data rate, the lowest order 802.11 mode is selected; i.e., 802.11a is chosen over 802.11n then 802.11ac or 802.11g is chosen over 802.11n.

Wi-Fi 2.4GHz (DTS Band)

Band (GHz)	Mode	Data Rate	Ch #	Freq. (MHz)	Measured average Power (dBm)	Tune-up upper Power (dBm)	Initial test configuration	Note(s)
2.4	802.11b	1 Mbps	1	2412	16.53	18.00		
			6	2437	17.25	18.00		
			11	2462	17.65	18.00	Yes	
	802.11g	6 Mbps	1	2412	12.42	14.00		
			6	2437	13.13	14.00		
			11	2462	13.26	14.00		
	802.11n20	6.5 Mbps	1	2412	12.44	14.00		
			6	2437	13.18	14.00		
			11	2462	13.30	14.00		

Note(s):

1. SAR test channel was chosen. (shaded blue frame)

Bluetooth

Band (GHz)	Mode	Data Rate	Ch #	Freq. (MHz)	Measured average Power (dBm)	Tune-up upper Power (dBm)	Initial test configuration	Note(s)
2.4	BDR	DH5	0	2402	3.30	5.00		1
			39	2441	3.33	5.00		1
			78	2480	1.51	3.00		1
	EDR	2DH5	0	2402	-2.48	-1.00		1
			39	2441	-1.87	-1.00		1
			78	2480	-3.70	-2.00		1
	EDR	3DH5	0	2402	-2.47	-1.00		1
			39	2441	-1.77	-1.00		1
			78	2480	-3.69	-2.00		1
	LE	-	0	2402	0.77	2.00		1
			19	2440	1.10	2.00		1
			39	2480	-1.01	0.00		1

Note(s):

1. SAR measurement is not required for Bluetooth according with Section 5.

Wi-Fi 5GHz (U-NII-2A Band)

Band (GHz)	Mode	Data Rate	Ch #	Freq. (MHz)	Measured average Power (dBm)	Tune-up upper Power (dBm)	Initial test configuration	Note(s)
5.3 (U-NII-2A)	802.11a	6 Mbps	56	5280	10.00	11.0		
			60	5300	10.07	11.0	Yes	
			64	5320	10.02	11.0		
	802.11n20	6.5 Mbps	56	5280	9.57	10.5		
			60	5300	9.53	10.5		
			64	5320	9.53	10.5		
	802.11n40	13.5 Mbps	62	5310	9.32	10.5		
	802.11ac20	6.5 Mbps	56	5280	9.59	10.5		
			60	5300	9.64	10.5		
			64	5320	9.58	10.5		
	802.11ac40	13.5 Mbps	62	5310	9.23	10.5		

Wi-Fi 5GHz (U-NII-2C Band)

Band (GHz)	Mode	Data Rate	Ch #	Freq. (MHz)	Measured average Power (dBm)	Tune-up upper Power (dBm)	Initial test configuration	Note(s)
5.5 (U-NII-2C)	802.11a	6 Mbps	100	5500	10.33	11.0		
			116	5580	10.44	11.0		
			140	5700	10.61	11.0		
			144	5720	10.63	11.0	Yes	
	802.11n20	6.5 Mbps	100	5500	9.89	10.5		
			116	5580	9.92	10.5		
			140	5700	10.32	10.5		
			144	5720	10.36	10.5		
	802.11n40	13.5 Mbps	102	5510	9.52	10.5		
			110	5550	9.61	10.5		
			134	5670	10.03	10.5		
			142	5710	10.07	10.5		
	802.11ac20	6.5 Mbps	100	5500	9.84	10.5		
			116	5580	9.97	10.5		
			140	5700	10.36	10.5		
			144	5720	10.22	10.5		
	802.11ac40	13.5 Mbps	102	5510	9.53	10.5		
			110	5550	9.72	10.5		
			134	5670	9.95	10.5		
			142	5710	10.03	10.5		
	802.11ac80	29.3 Mbps	106	5530	8.17	10.0		
			122	5610	8.10	10.0		
			138	5690	8.51	10.0		

Wi-Fi 5GHz (U-NII-3 Band)

Band (GHz)	Mode	Data Rate	Ch #	Freq. (MHz)	Measured average Power (dBm)	Tune-up upper Power (dBm)	Initial test configuration	Note(s)
5.8 (U-NII-3)	802.11a	6 Mbps	149	5745	10.76	11.0	Yes	
			157	5785	10.59	11.0		
			165	5825	10.30	11.0		
	802.11n20	6.5 Mbps	149	5745	10.32	10.5		
			157	5785	10.12	10.5		
			165	5825	9.87	10.5		
	802.11n40	13.5 Mbps	151	5755	10.13	10.5		
			159	5795	9.84	10.5		
	802.11ac20	6.5 Mbps	149	5745	10.33	10.5		
			157	5785	10.12	10.5		
			165	5825	9.82	10.5		
	802.11ac40	13.5 Mbps	151	5755	10.03	10.5		
			159	5795	9.94	10.5		
	802.11ac80	29.3 Mbps	155	5775	8.60	10.0		

Note(s):

1. SAR test channel was chosen. (shaded blue frame)

6.3 SAR testing operating modes

The operating mode for SAR testing was decided by the output power

Mode	Frequency Band	Test Frequency	Modulation
IEEE802.11b	2412-2462MHz	2462MHz 11ch	DSSS
IEEE802.11a	5280-5320MHz	5280MHz 56ch	OFDM
IEEE802.11a	5280-5320MHz	5300MHz 60ch	OFDM
IEEE802.11a	5280-5320MHz	5320MHz 64ch	OFDM
IEEE802.11a	5500-5700MHz	5700MHz 140ch	OFDM
IEEE802.11a	5500-5700MHz	5720MHz 144ch	OFDM
IEEE802.11a	5745-5825MHz	5745MHz 149ch	OFDM
IEEE802.11a	5745-5825MHz	5785MHz 157ch	OFDM

SECTION7: Description of the Body setup

7.1 Procedure for SAR testing

-The tested procedure was performed according to the KDB 447498 D01 (Mobile and Portable Device RF Exposure Procedures and Equipment Authorization Policies).

7.2 Test position for Body setup

No.	Position	Test distance	WLAN	Bluetooth
			Tested	Tested
1	Top	0mm	☑	☐
2	Bottom	0mm	☐	☐
3	Right	0mm	☐	☐
4	Left	0mm	☑	☐
5	Left tilt	0mm	☑	☐
6	Front	0mm	☑	☐
7	Front tilt	0mm	☑	☐
8	Rear	0mm	☑	☐
9	Diagonal side	0mm	☑	☐

7.3 Test position for Body-worn accessory setup

No.	Position	Test distance	WLAN	Bluetooth
			Tested	Tested
1	Rear	0mm	☑	☐

SECTION8: Test surrounding

8.1 Measurement uncertainty

This measurement uncertainty budget is suggested by IEEE Std 1528(2013) and IEC62209-2:2010, and determined by Schmid & Partner Engineering AG (DASY5 Uncertainty Budget). Per KDB 865664 D01 SAR Measurement 100 MHz to 6 GHz Section 2.8.1., when the highest measured SAR(1g) within a frequency band is < 1.5W/kg, the extensive SAR measurement uncertainty analysis described in IEEE Std.1528 (2013) is not required in SAR reports submitted for equipment approval.

<0.3 – 3GHz range Body>

Error Description	Uncertain value ± %	Probability distribution	divisor	(ci) 1g	Standard (1g)
Measurement System					
Probe calibration	± 6.00	Normal	1	1	± 6.00
Axial isotropy of the probe	± 4.7	Rectangular	√3	0.7	± 1.9
Spherical isotropy of the probe	± 9.6	Rectangular	√3	0.7	± 3.9
Boundary effects	± 1.0	Rectangular	√3	1	± 0.6
Probe linearity	± 4.7	Rectangular	√3	1	± 2.7
Detection limit	± 1.0	Rectangular	√3	1	± 0.6
Modulation response	± 2.4	Rectangular	√3	1	± 1.4
Readout electronics	± 0.3	Normal	1	1	± 0.3
Response time	± 0.8	Rectangular	√3	1	± 0.5
Integration time	± 2.6	Rectangular	√3	1	± 1.5
RF ambient Noise	± 3.0	Rectangular	√3	1	± 1.7
RF ambient Reflections	± 3.0	Rectangular	√3	1	± 1.7
Probe Positioner	± 0.4	Rectangular	√3	1	± 0.2
Probe positioning	± 2.9	Rectangular	√3	1	± 1.7
Max.SAR Eval.	± 2.0	Rectangular	√3	1	± 1.2
Test Sample Related					
Device positioning	± 2.9	Normal	1	1	± 2.9
Device holder uncertainty	± 3.6	Normal	1	1	± 3.6
Power drift	± 5.0	Rectangular	√3	1	± 2.9
Power Scaling	+ 0.0	Rectangular	√3	1	± 0.0
Phantom and Setup					
Phantom uncertainty	± 6.1	Rectangular	√3	1	± 3.5
Algorithm for correcting SAR for deviations in permittivity and conductivity	± 1.9	Rectangular	√3	1	± 1.1
Liquid conductivity (meas.)	+ 4.3	Rectangular	√3	0.78	+ 1.9
Liquid permittivity (meas.)	- 3.4	Rectangular	√3	0.26	- 0.5
Liquid conductivity - temp.unc (below 2deg.C.)	± 5.2	Rectangular	√3	0.78	± 2.3
Liquid permittivity - temp.unc (below 2deg.C.)	± 0.8	Rectangular	√3	0.23	± 0.1
Combined Standard Uncertainty					± **11.332**
Expanded Uncertainty (k=2)					± **22.7**

*. Table of uncertainties are listed for ISO/IEC 17025.

<3 – 6GHz range Body>

Error Description	Uncertai value ±	Probability distribution	divisor	(ci) 1g	Standard (1g)
Measurement System					
Probe calibration	± 6.55	Normal	1	1	± 6.55
Axial isotropy of the probe	± 4.7	Rectangular	√3	0.7	± 1.9
Spherical isotropy of the probe	± 9.6	Rectangular	√3	0.7	± 3.9
Boundary effects	± 1.0	Rectangular	√3	1	± 0.6
Probe linearity	± 4.7	Rectangular	√3	1	± 2.7
Detection limit	± 1.0	Rectangular	√3	1	± 0.6
Modulation response	± 2.4	Rectangular	√3	1	± 1.4
Readout electronics	± 0.3	Normal	1	1	± 0.3
Response time	± 0.8	Rectangular	√3	1	± 0.5
Integration time	± 2.6	Rectangular	√3	1	± 1.5
RF ambient Noise	± 3.0	Rectangular	√3	1	± 1.7
RF ambient Reflections	± 3.0	Rectangular	√3	1	± 1.7
Probe Positioner	± 0.4	Rectangular	√3	1	± 0.2
Probe positioning	± 2.9	Rectangular	√3	1	± 1.7
Max.SAR Eval.	± 2.0	Rectangular	√3	1	± 1.2
Test Sample Related					
Device positioning	± 2.9	Normal	1	1	± 2.9
Device holder uncertainty	± 3.6	Normal	1	1	± 3.6
Power drift	± 5.0	Rectangular	√3	1	± 2.9
Power Scaling	+ 0.0	Rectangular	√3	1	± 0.0
Phantom and Setup					
Phantom uncertainty	± 6.1	Rectangular	√3	1	± 3.5
Algorithm for correcting SAR for deviations in permittivity and conductivity	± 1.9	Rectangular	√3	1	± 1.1
Liquid conductivity (meas.)	+ 4.2	Rectangular	√3	0.78	+ 1.9
Liquid permittivity (meas.)	- 3.8	Rectangular	√3	0.26	- 0.6
Liquid conductivity - temp.unc (below 2deg.C.)	± 5.2	Rectangular	√3	0.78	± 2.3
Liquid permittivity - temp.unc (below 2deg.C.)	± 0.8	Rectangular	√3	0.23	± 0.1
Combined Standard Uncertainty					**± 11.628**
Expanded Uncertainty (k=2)					**± 23.3**

*. Table of uncertainties are listed for ISO/IEC 17025.

SECTION9: Parameter Check

The dielectric parameters were checked prior to assessment using the DAK dielectric probe kit.
The dielectric parameters measurement is reported in each correspondent section.

According to KDB865664 D01, +/- 5% tolerances are required for εr and σ and then below table which is the target value of the simulated tissue liquid is quoted from KDB865664 D01.

Target Frequency	Head		Body	
(MHz)	ε_r	σ (S/m)	ε_r	σ (S/m)
150	52.3	0.76	61.9	0.80
300	45.3	0.87	58.2	0.92
450	43.5	0.87	56.7	0.94
835	41.5	0.90	55.2	0.97
900	41.5	0.97	55.0	1.05
915	41.5	0.98	55.0	1.06
1450	40.5	1.20	54.0	1.30
1610	40.3	1.29	53.8	1.40
1800 – 2000	40.0	1.40	53.3	1.52
2450	39.2	1.80	52.7	1.95
3000	38.5	2.40	52.0	2.73
5800	35.3	5.27	48.2	6.00

(ε_r = relative permittivity, σ = conductivity and ρ = 1000 kg/m^3)

For SAR system check

DIELECTRIC PARAMETERS MEASUREMENT RESULTS											
Date	Ambient Temp. [deg.c]	Relative Humidity [%]	Liquid type	Liquid Temp. [deg.c]	Measured Frequency [MHz]	Parameters	Target Value*1	Measured	Deviation [%]	Limit [%]	Remark
2016/11/28	24.0	45	MSL 2450	23.5	2450	σ [mho/m]	1.95	2.03	**4.3**	+/-5	*1
						εr	52.7	50.9	-3.3	+/-5	
2016/11/29	24.0	44	MBBL 3.5-5.8	23.5	5250	σ [mho/m]	5.36	5.46	2.0	+/-5	*2
						εr	48.9	48.0	-2.0	+/-5	
2016/11/29	24.0	44	MBBL 3.5-5.8	23.5	5600	σ [mho/m]	5.77	5.88	2.0	+/-5	*2
						εr	48.5	47.5	-1.9	+/-5	
2016/12/1	24.0	45	MBBL 3.5-5.8	23.5	5750	σ [mho/m]	5.94	6.04	1.6	+/-5	*2
						εr	48.3	46.5	**-3.7**	+/-5	

For SAR measurement for 2.4GHz

DIELECTRIC PARAMETERS MEASUREMENT RESULTS											
Date	Ambient Temp. [deg.c]	Relative Humidity [%]	Liquid type	Liquid Temp. [deg.c]	Measured Frequency [MHz]	Parameters	Target Value*1	Measured	Deviation [%]	Limit [%]	Remark
2016/11/28	24.0	45	MSL 2450	23.5	2462	σ [mho/m]	1.97	2.05	**4.3**	+/-5	*2
						εr	52.7	50.9	**-3.4**	+/-5	

For SAR measurement for 5GHz

DIELECTRIC PARAMETERS MEASUREMENT RESULTS											
Date	Ambient Temp. [deg.c]	Relative Humidity [%]	Liquid type	Liquid Temp. [deg.c]	Measured Frequency [MHz]	Parameters	Target Value*1	Measured	Deviation [%]	Limit [%]	Remark
2016/11/29	24.0	44	MBBL 3.5-5.8	23.5	5280	σ [mho/m]	5.39	5.53	2.5	+/-5	*2
						εr	48.9	47.9	-2.1	+/-5	
2016/11/29	24.0	44	MBBL 3.5-5.8	23.5	5300	σ [mho/m]	5.42	5.60	3.3	+/-5	*2
						εr	48.9	47.7	-2.4	+/-5	
2016/11/29	24.0	44	MBBL 3.5-5.8	23.5	5320	σ [mho/m]	5.44	5.67	**4.2**	+/-5	*2
						εr	48.9	47.7	-2.3	+/-5	
2016/11/29	24.0	44	MBBL 3.5-5.8	23.5	5700	σ [mho/m]	5.88	6.08	3.4	+/-5	*2
						εr	48.3	47.2	-2.3	+/-5	
2016/11/29	24.0	44	MBBL 3.5-5.8	23.5	5720	σ [mho/m]	5.91	6.13	3.7	+/-5	*2
						εr	48.3	47.4	-1.9	+/-5	
2016/12/1	24.0	45	MBBL 3.5-5.8	23.5	5745	σ [mho/m]	5.94	6.03	1.6	+/-5	*2
						εr	48.3	46.4	**-3.8**	+/-5	
2016/12/1	24.0	45	MBBL 3.5-5.8	23.5	5785	σ [mho/m]	5.98	6.04	0.9	+/-5	*2
						εr	48.2	46.5	-3.6	+/-5	

σ : Conductivity / εr: Relative Permittivity
*1 The Target value is a parameter defined in KDB 865664D01.
*2 The dielectric parameters should be linearly interpolated between the closest pair of target frequencies to determine the applicable dielectric parameters corresponding to the device test frequency.

Correlation confirmation with measured TSL parameters of the calibration certificate of system validation dipoles (Refer to Appendix 2)

+/- 6% limit for deviation provided by manufacture tolerances are required for εr and σ and then below table which is the target value of the simulated tissue liquid is quoted from data measured TSL parameters of dipole calibration.

Freq [MHz]	Model,S/N	Body	
		ε	σ
2450	D2450,854	52.6	2.02
5250	D5GHV2,1020	47	5.44
5600	D5GHV2,1020	46.4	5.91
5750	D5GHV2,1020	46.1	6.12

DIELECTRIC PARAMETERS MEASUREMENT RESULTS											
Date	Ambient Temp. [deg.c]	Relative Humidity [%]	Liquid type	Liquid Temp. [deg.c]	Measured Frequency [MHz]	Parameters	Target Value*1	Measured	Deviation [%]	Limit [%]	Remark
28-Nov	24.0	45	MSL 2450	23.5	2450	σ [mho/m]	2.02	2.03	0.7	+/-6	
						εr	52.6	50.9	-3.1	+/-6	
29-Nov	24.0	44	MBBL 3.5-5.8	23.5	5250	σ [mho/m]	5.44	5.46	0.4	+/-6	
						εr	47.0	48.0	2.1	+/-6	
29-Nov	24.0	44	MBBL 3.5-5.8	23.5	5600	σ [mho/m]	5.91	5.88	-0.5	+/-6	
						εr	46.4	47.5	2.5	+/-6	
1-Dec	24.0	45	MBBL 3.5-5.8	23.5	5750	σ [mho/m]	6.12	6.04	-1.4	+/-6	
						εr	46.1	46.5	0.8	+/-6	

εr: Relative Permittivity / σ : Conductivity
*1 The Target value is a parameter defined in each Dipole.

SECTION10: System Check confirmation

The measurements were performed in the flat section of the TWIN SAM or ELI phantom, shell thickness: 2.0 ±0.2 mm (bottom plate) filled with Body or Head simulating liquid of the following parameters.
The depth of tissue-equivalent liquid in a phantom must be ≥ 15.0 cm ± 0.5 cm for SAR measurements ≤ 3 GHz and ≥ 10.0 cm ± 0.5 cm for measurements > 3 GHz.
The DASY system with an E-Field Probe was used for the measurements.
The dipole was mounted on the small tripod so that the dipole feed point was positioned below the center marking of the flat phantom section and the dipole was oriented parallel to the body axis (the long side of the phantom).
The standard measuring distance was 10 mm (above 1GHz to 6GHz) and 15 mm (below 1GHz) from dipole center to the simulating liquid surface.
The coarse grid with a grid spacing of 12 mm (1GHz to 3GHz) and15 mm (below 1GHz) was aligned with the dipole.
For 5 GHz band - The coarse grid with a grid spacing of 10 mm was aligned with the dipole.
Special 7x7x7 (below 3 GHz) and/or 8x8x7 (above 3 GHz) fine cube was chosen for the cube.
Distance between probe sensors and phantom surface was set to 3 mm.
For 5 GHz band - Distance between probe sensors and phantom surface was set to 2.5 mm
The dipole input power (forward power) was 100 mW(For 5GHz band) or 250 mW(For other band).
The results are normalized to 1 W input power.

Freq [MHz]	Model,S/N	Body *1	
		(SPEAG) 1g [W/kg]	(SPEAG) 10g[W/kg]
2450	D2450,854	50.8	23.72
5250	D5GHV2,1020	73.6	20.9
5600	D5GHV2,1020	78.2	22.1
5750	D5GHV2,1020	73.9	2.07

*1 The target(reference) SAR values can be obtained from the calibration certificate of system validation dipoles(Refer to Appendix 2). The target SAR values are SAR measured value in the calibration certificate scaled to 1W.

Date Tested	Test Freq	Model,S/N	T.S. Liquid		Measured Results		Target (Ref. Value)	Delta ±10 %
					Zoom Scan	Normalize to 1 W		
11/28/2016	2450	D2450,854	Body	1g	13.00	52.0	50.80	0.8
				10g	5.99	24.0	23.72	0.5
11/29/2016	5250	D5GHV2,1020	Body	1g	7.49	74.9	73.60	1.8
				10g	2.12	21.20	20.90	1.4
11/29/2016	5600	D5GHV2,1020	Body	1g	8.22	82.2	78.20	5.1
				10g	2.29	22.90	22.10	3.6
12/1/2016	5750	D5GHV2,1020	Body	1g	6.74	67.40	73.90	-8.8
				10g	1.89	18.90	20.70	-8.7

SECTION11: SAR Test data for WLAN 2.4GHz band

11.1 Result of Body 2.4GHz SAR

Test Position	Mode	Dist. (mm)	Ch #.	Freq. (MHz)	Power (dBm)		Scaled factor	1-g SAR (W/kg)	
					Tune-up limit	Meas.		Meas.	Scaled
Top	802.11b	0	1	2412	18.00	16.53	1.40		
			6	2437	18.00	17.25	1.19		
			11	2462	18.00	17.65	1.08	0.011	0.012
Left	802.11b	0	1	2412	18.00	16.53	1.40		
			6	2437	18.00	17.25	1.19		
			11	2462	18.00	17.65	1.08	0.159	0.172
Left tilt	802.11b	0	1	2412	18.00	16.53	1.40		
			6	2437	18.00	17.25	1.19		
			11	2462	18.00	17.65	1.08	0.211	0.229
Front	802.11b	0	1	2412	18.00	16.53	1.40		
			6	2437	18.00	17.25	1.19		
			11	2462	18.00	17.65	1.08	0.070	0.076
Front tilt	802.11b	0	1	2412	18.00	16.53	1.40		
			6	2437	18.00	17.25	1.19		
			11	2462	18.00	17.65	1.08	0.171	0.185
Rear	802.11b	0	1	2412	18.00	16.53	1.40		
			6	2437	18.00	17.25	1.19		
			11	2462	18.00	17.65	1.08	0.031	0.034
Diagonal side	802.11b	0	1	2412	18.00	16.53	1.40		
			6	2437	18.00	17.25	1.19		
			11	2462	18.00	17.65	1.08	0.194	0.210

Note(s):

1. Scaled factor = Maximum tune-up tolerance limit [mW] / Measured power [mW]
2. Scaled SAR (Reported SAR)= Measured SAR [W/kg] · Scaled factor
3. Highest measured output power channel was tested initially according to KDB248227D01.
4. According to KDB248227D01
   1) Highest reported SAR is ≤ 0.4 W/kg. Therefore, further SAR measurements within this exposure condition are not required.
   2) Highest reported SAR is > 0.4 W/kg. Due to the highest reported SAR for this test position, other test positions in standalone exposure condition were evaluated until a SAR ≤ 0.8 W/kg was reported.
   3) For all positions/configurations tested using the initial test position and subsequent test positions, when the reported SAR is > 0.8 W/kg, measure the SAR for these positions/configurations on the subsequent next highest measured output power channel(s) until the reported SAR is ≤ 1.2 W/kg or all required test channels are considered.

OFDM was excluded from the following table according to KDB248227D01.

SAR is not required for the following 2.4 GHz OFDM conditions according to KDB248227D01.

1) When KDB447498D01 SAR test exclusion applies to the OFDM configuration.

2) When the highest reported SAR for DSSS is adjusted by the ratio of OFDM to DSSS specified maximum output power and the adjusted SAR is ≤ 1.2 W/kg.

Maximum tune-up tolerance limit		Maximum tune-up tolerance limit		OFDM scaled factor *5	Position	DSSS Reported SAR value [W/kg]	OFDM Estimated SAR value [W/kg]	Exclusion limit [W/kg]	**Standalone SAR tested**
DSSS		OFDM							
[dBm]	[mW]	[dBm]	[mW]						
18.00	63.10	14.00	25.12	0.398	**Left**	**0.229**	**0.091**	< 1.2	**No**

Notes:

5. OFDM scaled factor = Maximum tune-up tolerance limit of OFDM [mW] / Maximum tune-up tolerance limit of DSSS [mW]
6. Estimated SAR of OFDM= Reported SAR of DSSS[W/kg] · OFDM scaled factor

SECTION12: SAR Test data for WLAN 5GHz band

12.1 Result of Body 5.3GHz SAR

Test Position	Mode	Dist. (mm)	Ch #.	Freq. (MHz)	Power (dBm)		Scaled factor	1-g SAR (W/kg)	
					Tune-up limit	Meas.		Meas.	Scaled
Top	802.11a	0	56	5280	11.00	10.00	1.26		
			60	5300	11.00	10.07	1.24	0.173	0.214
			64	5320	11.00	10.02	1.25		
Left	802.11a	0	56	5280	11.00	10.00	1.26		
			60	5300	11.00	10.07	1.24	0.707	0.876
			64	5320	11.00	10.02	1.25	0.777	0.974
Left tilt	802.11a	0	56	5280	11.00	10.00	1.26	0.922	1.161
			60	5300	11.00	10.07	1.24	0.956	1.184
			64	5320	11.00	10.02	1.25	0.969	1.214
Front	802.11a	0	56	5280	11.00	10.00	1.26		
			60	5300	11.00	10.07	1.24	0.215	0.266
			64	5320	11.00	10.02	1.25		
Front tilt	802.11a	0	56	5280	11.00	10.00	1.26		
			60	5300	11.00	10.07	1.24	0.651	0.806
			64	5320	11.00	10.02	1.25	0.693	0.868
Rear	802.11a	0	56	5280	11.00	10.00	1.26		
			60	5300	11.00	10.07	1.24	0.057	0.071
			64	5320	11.00	10.02	1.25		
Diagonal side	802.11a	0	56	5280	11.00	10.00	1.26		
			60	5300	11.00	10.07	1.24	0.924	1.145
			64	5320	11.00	10.02	1.25	0.922	1.155

Note(s):

1. Scaled factor = Maximum tune-up tolerance limit [mW] / Measured power [mW]
2. Scaled SAR (Reported SAR)= Measured SAR [W/kg] · Scaled factor
3. Highest measured output power channel was tested initially according to KDB248227D01.
4. According to KDB248227D01
   1) Highest reported SAR is ≤ 0.4 W/kg. Therefore, further SAR measurements within this exposure condition are not required.
   2) Highest reported SAR is > 0.4 W/kg. Due to the highest reported SAR for this test position, other test positions in standalone exposure condition were evaluated until a SAR ≤ 0.8 W/kg was reported.
   3) For all positions/configurations tested using the initial test position and subsequent test positions, when the reported SAR is > 0.8 W/kg, measure the SAR for these positions/configurations on the subsequent next highest measured output power channel(s) until the reported SAR is ≤ 1.2 W/kg or all required test channels are considered.
5. When the highest reported SAR of an antenna is > 1.2 W/kg, device holder perturbation verification is required. It's compared with and without the device holder. The device holder doesn't influence SAR value and Reported SAR is complied as < 1.6 W/kg.

Subsequent test configuration was excluded from the following table according to KDB248227D01.
SAR is not required for the following exclusion conditions according to KDB248227D01.
1) When KDB447498D01 SAR test exclusion applies to the initial test configuration.
2) When the highest reported SAR for initial test configuration is adjusted by the ratio of Subsequent test configuration to initial test configuration specified maximum output power and the adjusted SAR is ≤ 1.2 W/kg.

Maximum tune-up tolerance limit		Maximum tune-up tolerance limit		Scaled factor *5	Position	Initial test configuration Reported SAR value [W/kg]	Subsequent test configuration Estimated SAR value [W/kg]	Exclusion limit [W/kg]	**Standalone SAR tested**
Initial test configuration		Subsequent test configuration							
[dBm]	[mW]	[dBm]	[mW]						
11.00	12.59	10.50	11.22	0.891	**Left tilt**	**1.214**	**1.082**	< 1.2	**No**

Notes:
1. Scaled factor = Maximum tune-up tolerance limit of subsequent test configuration [mW] / Maximum tune-up tolerance limit of initial test configuration [mW]
2. Estimated SAR of sbsequent test configuration = Reported SAR of initial test configuration [W/kg] ·scaled factor
3. Maximum tune-up tolerance limit of subsequent test configuration is next highest tune-up tolerance limit.

12.2 Result of Body 5.5GHz SAR

Test Position	Mode	Dist. (mm)	Ch #.	Freq. (MHz)	Power (dBm)		Scaled factor	1-g SAR (W/kg)	
					Tune-up limit	Meas.		Meas.	Scaled
Top	802.11a	0	100	5500	11.00	10.33	1.17		
			116	5580	11.00	10.44	1.14		
			140	5700	11.00	10.61	1.09		
			144	5720	11.00	10.63	1.09	0.275	0.299
Left	802.11a	0	100	5500	11.00	10.33	1.17		
			116	5580	11.00	10.44	1.14		
			140	5700	11.00	10.61	1.09	0.819	0.896
			144	5720	11.00	10.63	1.09	0.870	0.947
Left tilt	802.11a	0	100	5500	11.00	10.33	1.17		
			116	5580	11.00	10.44	1.14		
			140	5700	11.00	10.61	1.09	0.989	1.082
			144	5720	11.00	10.63	1.09	0.959	1.044
Front	802.11a	0	100	5500	11.00	10.33	1.17		
			116	5580	11.00	10.44	1.14		
			140	5700	11.00	10.61	1.09		
			144	5720	11.00	10.63	1.09	0.226	0.246
Front tilt	802.11a	0	100	5500	11.00	10.33	1.17		
			116	5580	11.00	10.44	1.14		
			140	5700	11.00	10.61	1.09	0.761	0.833
			144	5720	11.00	10.63	1.09	0.761	0.829
Rear	802.11a	0	100	5500	11.00	10.33	1.17		
			116	5580	11.00	10.44	1.14		
			140	5700	11.00	10.61	1.09		
			144	5720	11.00	10.63	1.09	0.073	0.079
Diagonal side	802.11a	0	100	5500	11.00	10.33	1.17		
			116	5580	11.00	10.44	1.14		
			140	5700	11.00	10.61	1.09	0.894	0.978
			144	5720	11.00	10.63	1.09	0.876	0.954

Note(s):

1. Scaled factor = Maximum tune-up tolerance limit [mW] / Measured power [mW]
2. Scaled SAR (Reported SAR)= Measured SAR [W/kg] · Scaled factor
3. Highest measured output power channel was tested initially according to KDB248227D01.
4. According to KDB248227D01
   1) Highest reported SAR is ≤ 0.4 W/kg. Therefore, further SAR measurements within this exposure condition are not required.
   2) Highest reported SAR is > 0.4 W/kg. Due to the highest reported SAR for this test position, other test positions in standalone exposure condition were evaluated until a SAR ≤ 0.8 W/kg was reported.
   3) For all positions/configurations tested using the initial test position and subsequent test positions, when the reported SAR is > 0.8 W/kg, measure the SAR for these positions/configurations on the subsequent next highest measured output power channel(s) until the reported SAR is ≤ 1.2 W/kg or all required test channels are considered.

Subsequent test configuration was excluded from the following table according to KDB248227D01.
SAR is not required for the following exclusion conditions according to KDB248227D01.
1) When KDB447498D01 SAR test exclusion applies to the initial test configuration.
2) When the highest reported SAR for initial test configuration is adjusted by the ratio of Subsequent test configuration to initial test configuration specified maximum output power and the adjusted SAR is ≤ 1.2 W/kg.

Maximum tune-up tolerance limit		Maximum tune-up tolerance limit		Scaled factor *5	Position	Initial test configuration Reported SAR value [W/kg]	Subsequent test configuration Estimated SAR value [W/kg]	Exclusion limit [W/kg]	**Standalone SAR tested**
Initial test configuration		Subsequent test configuration							
[dBm]	[mW]	[dBm]	[mW]						
11.00	12.59	10.50	11.22	0.891	**Left tilt**	**1.082**	**0.964**	< 1.2	**No**

Notes:
1. Scaled factor = Maximum tune-up tolerance limit of subsequent test configuration [mW] / Maximum tune-up tolerance limit of initial test configuration [mW]
2. Estimated SAR of sbsequent test configuration = Reported SAR of initial test configuration [W/kg] ·scaled factor
3. Maximum tune-up tolerance limit of subsequent test configuration is next highest tune-up tolerance limit.

12.3 Result of Body 5.8GHz SAR

Test Position	Mode	Dist. (mm)	Ch #.	Freq. (MHz)	Power (dBm)		Scaled factor	1-g SAR (W/kg)	
					Tune-up limit	Meas.		Meas.	Scaled
Top	802.11a	0	149	5745	11.00	10.76	1.06	0.229	0.242
			157	5785	11.00	10.59	1.10		
			165	5825	11.00	10.30	1.17		
Left	802.11a	0	149	5745	11.00	10.76	1.06	0.790	0.835
			157	5785	11.00	10.59	1.10	0.762	0.837
			165	5825	11.00	10.30	1.17		
Left tilt	802.11a	0	149	5745	11.00	10.76	1.06	0.943	0.997
			157	5785	11.00	10.59	1.10	0.947	1.041
			165	5825	11.00	10.30	1.17		
Front	802.11a	0	149	5745	11.00	10.76	1.06	0.203	0.215
			157	5785	11.00	10.59	1.10		
			165	5825	11.00	10.30	1.17		
Front tilt	802.11a	0	149	5745	11.00	10.76	1.06	0.675	0.713
			157	5785	11.00	10.59	1.10		
			165	5825	11.00	10.30	1.17		
Rear	802.11a	0	149	5745	11.00	10.76	1.06	0.092	0.097
			157	5785	11.00	10.59	1.10		
			165	5825	11.00	10.30	1.17		
Diagonal side	802.11a	0	149	5745	11.00	10.76	1.06	0.898	0.949
			157	5785	11.00	10.59	1.10	0.849	0.933
			165	5825	11.00	10.30	1.17		

Note(s):

1. Scaled factor = Maximum tune-up tolerance limit [mW] / Measured power [mW]
2. Scaled SAR (Reported SAR)= Measured SAR [W/kg] · Scaled factor
3. Highest measured output power channel was tested initially according to KDB248227D01.
4. According to KDB248227D01
   1) Highest reported SAR is ≤ 0.4 W/kg. Therefore, further SAR measurements within this exposure condition are not required.
   2) Highest reported SAR is > 0.4 W/kg. Due to the highest reported SAR for this test position, other test positions in standalone exposure condition were evaluated until a SAR ≤ 0.8 W/kg was reported.
   3) For all positions/configurations tested using the initial test position and subsequent test positions, when the reported SAR is > 0.8 W/kg, measure the SAR for these positions/configurations on the subsequent next highest measured output power channel(s) until the reported SAR is ≤ 1.2 W/kg or all required test channels are considered.

Subsequent test configuration was excluded from the following table according to KDB248227D01.

SAR is not required for the following exclusion conditions according to KDB248227D01.
1) When KDB447498D01 SAR test exclusion applies to the initial test configuration.
2) When the highest reported SAR for initial test configuration is adjusted by the ratio of Subsequent test configuration to initial test configuration specified maximum output power and the adjusted SAR is ≤ 1.2 W/kg.

Maximum tune-up tolerance limit		Maximum tune-up tolerance limit		Scaled factor *5	Position	Initial test configuration Reported SAR value [W/kg]	Subsequent test configuration Estimated SAR value [W/kg]	Exclusion limit [W/kg]	**Standalone SAR tested**
Initial test configuration		Subsequent test configuration							
[dBm]	[mW]	[dBm]	[mW]						
11.00	12.59	10.50	11.22	0.891	**Left tilt**	**1.041**	**0.928**	< 1.2	**No**

Notes:

1. Scaled factor = Maximum tune-up tolerance limit of subsequent test configuration [mW] / Maximum tune-up tolerance limit of initial test configuration [mW]
2. Estimated SAR of subsequent test configuration = Reported SAR of initial test configuration [W/kg] ·scaled factor
3. Maximum tune-up tolerance limit of subsequent test configuration is next highest tune-up tolerance limit.

SECTION13: SAR Test data for Body-worn accessory

13.1 Result of Body-worn accessory

Test Position	Mode	Dist. (mm)	Ch #.	Freq. (MHz)	Power (dBm)		Scaled factor	1-g SAR (W/kg)	
					Tune-up limit	Meas.		Meas.	Scaled
Rear with Magnet Clip	802.11a	0	149	5745	11.00	10.76	1.06	0.054	0.057
			157	5785	11.00	10.59	1.10		
			165	5825	11.00	10.30	1.17		
Rear with Main Clip	802.11a	0	149	5745	11.00	10.76	1.06	0.033	0.035
			157	5785	11.00	10.59	1.10		
			165	5825	11.00	10.30	1.17		
Rear with Pen Clip	802.11a	0	149	5745	11.00	10.76	1.06	0.035	0.037
			157	5785	11.00	10.59	1.10		
			165	5825	11.00	10.30	1.17		

Note(s):

1. Scaled factor = Maximum tune-up tolerance limit [mW] / Measured power [mW]
2. Scaled SAR (Reported SAR)= Measured SAR [W/kg] · Scaled factor
3. Highest measured output power channel was tested initially according to KDB248227D01.
4. According to KDB248227D01
   1) Highest reported SAR is ≤ 0.4 W/kg. Therefore, further SAR measurements within this exposure condition are not required.
   2) Highest reported SAR is > 0.4 W/kg. Due to the highest reported SAR for this test position, other test positions in standalone exposure condition were evaluated until a SAR ≤ 0.8 W/kg was reported.
5. Tested band was determined with worst SAR band of Rear position.
6. Each body-worn accessory is referred to Appendix4.

SECTION14: Repeated measurement

According to KDB865664 D1.
1) Repeated measurement is not required when the original highest measured SAR is < 0.80 W/kg; steps 2) through 4) do not apply.
2) When the original highest measured SAR is ≥ 0.80 W/kg, repeat that measurement once.
3) Perform a second repeated measurement only if the ratio of largest to smallest SAR for the original and first repeated measurements is > 1.20 or when the original or repeated measurement is ≥ 1.45 W/kg (~ 10% from the 1-g SAR limit).
4) Perform a third repeated measurement only if the original, first or second repeated measurement is ≥ 1.5 W/kg and the ratio of largest to smallest SAR for the original, first and second repeated measurements is > 1.20.

Wireless Technologies	Test Configuration	Mode	Dist. (mm)	Ch #.	Freq. (MHz)	Meas. SAR (W/kg)		Largest to Smallest SAR Ratio
	Position					Original	Repeated	
Wi-Fi 2.4 GHz	Left tilt	802.11b	0	11	2462	0.211	N/A	N/A
Wi-Fi 5.3 GHz	Left tilt	802.11a	0	62	5320	0.969	0.941	1.030
Wi-Fi 5.5 GHz	Left tilt	802.11a	0	140	5700	0.989	0.939	1.053
Wi-Fi 5.5 GHz	Left tilt	802.11a	0	157	5785	0.947	0.913	1.037

Note(s):
N/A: Repeated Measurement is not required since the original highest measured SAR for all bands is < 0.80 W/kg.

SECTION15: Test instruments

Control No.	Instrument	Manufacturer	Model No	Serial No	Test Item	Calibration Date * Interval(month)
MPM-11	Dual Power Meter	Agilent	E4419B	MY45102060	SAR	2016/08/24 * 12
MPSE-15	Power sensor	Agilent	E9301A	MY41498311	SAR	2016/08/24 * 12
MPSE-16	Power sensor	Agilent	E9301A	MY41498313	SAR	2016/08/24 * 12
MRFA-24	Pre Amplifier	R&K	R&K CGA020M602-2633R	B30550	SAR	2016/06/27 * 12
MSG-10	Signal Generator	Agilent	N5181A	MY47421098	SAR	2016/11/09 * 12
MOS-37	Digital thermometer	LKM electronic	DTM3000	-	SAR	2016/07/28 * 12
MAT-78	Attenuator	Telegrartner	J01156A0011	0042294119	SAR	Pre Check
MPM-15	Power Meter	Agilent	N1914A	MY53060017	SAR	2016/06/27 * 12
MPSE-21	Power sensor	Agilent	N8482H	MY52460010	SAR	2016/06/27 * 12
MHDC-12	Dual Directional Coupler	Hewlett Packard	772D	2839A0016	SAR(2-18GHz)	Pre Check
MMSL2450	Tissue simulation liquid (Body)	Schmid&Partner Engineering AG	MSL2450V2	SL AA 245 BA	SAR*Daily Check Target Value ±5%	Pre Check
MDA-08	Dipole Antenna	Schmid&Partner Engineering AG	D5GHzV2	1020	SAR(D5G)	2016/01/20 * 12
MMBBL3.5-5.8	Tissue simulation liquid (Body)	Schmid&Partner Engineering AG	MBBL3500-5800V5	SL AAM 501 DA	SAR*Daily Check Target Value ±5%	Pre Check
MDAE-02	Data Acquisition Electronics	Schmid&Partner Engineering AG	DAE4	1369	SAR	2016/05/13 * 12
MRENT-S04	Dosimetric E-Field Probe	Schmid&Partner Engineering AG	EX3DV4	3745	SAR	2016/04/20 * 12
MPF-03	2mm Oval Flat Phantom	Schmid&Partner Engineering AG	QDOVA001BB	1203	SAR	2016/05/07 * 12
MDH-04	Device holder	Schmid&Partner Engineering AG	Mounting device for transmitter	-	SAR	Pre Check
MOS-35	Digital thermometer	HANNA	Checktemp 4	-	SAR	2016/07/28 * 12
COTS-MSAR-03	Dasy5	Schmid&Partner Engineering AG	DASY5	-	SAR	-
MRBT-03	SAR robot	Schmid&Partner Engineering AG	TX60 Lspeag	F13/5PPLD1/A/01	SAR	2016/06/30 * 12
MRENT-S08	Dipole Antenna	Schmid&Partner Engineering AG	D2450V2	854	SAR	2016/05/13 * 12

***1) This test equipment was used for the tests before the expiration date of the calibration.**
The expiration date of the calibration is the end of the expired month.
All equipment is calibrated with valid calibrations. Each measurement data is traceable to the national or international standards.
As for some calibrations performed after the tested dates, those test equipment have been controlled by means of an unbroken chains of calibrations.

SAR room is checked before every testing and ambient noise is <0.012W/kg

APPENDIX 1 : SAR Measurement data

Evaluation procedure

The evaluation was performed with the following procedure:

Step 1: Measurement of the E-field at a fixed location above the ear point or central position of flat phantom was used as a reference value for assessing the power drop.

Step 2: The SAR distribution at the exposed side of head or body position was measured at a distance of each device from the inner surface of the shell. The area covered the entire dimension of the antenna of EUT and the horizontal grid spacing was 15 mm x 15 mm, 12 mm x 12 mm or 10mm x 10mm. Based on these data, the area of the maximum absorption was determined by spline interpolation.

Step 3: Around this point found in the Step 2 (area scan), a volume of 30mm x 30mm x 30mm or more was assessed by measuring 7 x 7 x 7 points at least for below 3GHz and a volume of 28 mm x 28mm x 22.5mm or more was assessed by measuring 8 x 8 x 6(ratio step method (*1)) points at least for 5GHz band.

And for any secondary peaks found in the Step2 which are within 2dB of maximum peak and not with this Step3 (Zoom scan) is repeated. On the basis of this data set, the spatial peak SAR value was evaluated under the following procedure:

(1). The data at the surface were extrapolated, since the center of the dipoles is 1mm(EX3DV4) away from the tip of the probe and the distance between the surface and the lowest measuring point is 1.3 mm. The extrapolation was based on a least square algorithm [4]. A polynomial of the fourth order was calculated through the points in z-axes.
This polynomial was then used to evaluate the points between the surface and the probe tip.

(2). The maximum interpolated value was searched with a straightforward algorithm. Around this maximum the SAR values averaged over the spatial volumes (1 g or 10 g) were computed by the 3D-Spline interpolation algorithm. The 3D-Spline is composed of three one-dimensional splines with the “Not a knot"-condition (in x, y and z-directions) [4], [5]. The volume was integrated with the trapezoidal-algorithm. One thousand points (10 x 10 x 10) were interpolated to calculate the average.

(3). All neighboring volumes were evaluated until no neighboring volume with a higher average value was found.

***1. Ratio step method parameters used;**
The first measurement point: 2mm from the phantom surface, the initial grid separation: 2mm, subsequent graded grid ratio: 1.5
These parameters comply with the requirement of the KDB 865664D01.

Step 4: Re-measurement of the E-field at the same location as in Step 1.

Confirmation after SAR testing
It was checked that the power drift [W] is within +/-5%.The verification of power drift during the SAR test is that DASY5 system calculates the power drift by measuring the e-filed at the same location at beginning and the end of the scan measurement for each test position.

DASY5 system calculation Power drift value[dB] =20log(Ea)/(Eb)
Before SAR testing : Eb[V/m]
After SAR testing : Ea[V/m]

Limit of power drift[W] =+/-5%
X[dB]=10log[P]=10log(1.05/1)=10log(1.05)-10log(1)=0.212dB

from E-filed relations with power.
p=E^2/η=E^2/
Therefore, The correlation of power and the E-filed
XdB=10log(P)=10log(E)^2=20log(E)

Therefore,
The calculated power drift of DASY5 System must be the less than +/-0.212dB.

2.4GHz Measurement data

WLAN 2.4G 11b 1Mbps 2462MHz Top 0mm
Communication System: UID 0, WLAN 11a/b/g/n (0); Communication System Band: 11b/g/n (2.4G); Frequency: 2462 MHz; Duty Cycle: 1:1
Medium parameters used (interpolated): f = 2462 MHz; σ = 2.051 S/m; ε_r = 50.894; ρ = 1000 kg/m^3
Phantom section: Flat Section
Measurement Standard: DASY5 (IEEE/IEC/ANSI C63.19-2007)
DASY5 Configuration
Probe: EX3DV4 - SN3745; ConvF(6.73, 6.73, 6.73); Calibrated: 2016/04/20;
Sensor-Surface: 2mm (Mechanical Surface Detection)
Electronics: DAE4 Sn1369; Calibrated: 2016/05/13
Phantom: ELI v5.0 (30deg probe tilt); Type: QDOVA002AA; Serial: TP:1203
Measurement SW: DASY52, Version 52.8 (8); SEMCAD X Version 14.6.10 (7331)

Area Scan (61x81x1): Interpolated grid: dx=1.200 mm, dy=1.200 mm
Maximum value of SAR (interpolated) = 0.0196 W/kg

Zoom Scan (7x7x7)/Cube 0: Measurement grid: dx=5mm, dy=5mm, dz=5mm
Reference Value = 2.725 V/m; Power Drift = -0.13 dB
Peak SAR (extrapolated) = 0.0430 W/kg
SAR(1 g) = 0.011 W/kg; SAR(10 g) = 0.00535 W/kg
Maximum value of SAR (measured) = 0.0167 W/kg

Date: 2016/11/28
Ambient Temp. : 24.0 degree.C. Liquid Temp.; 23.5 degree.C.

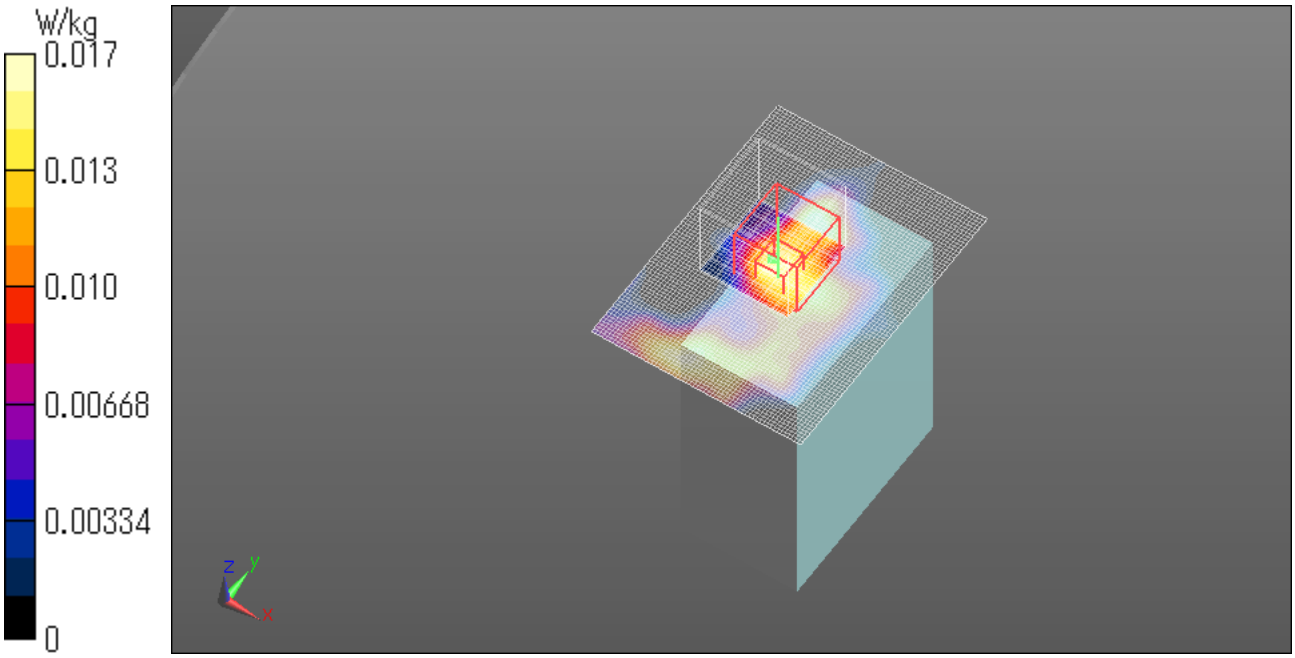

WLAN 2.4G 11b 1Mbps 2462MHz Left 0mm
Communication System: UID 0, WLAN 11a/b/g/n (0); Communication System Band: 11b/g/n (2.4G); Frequency: 2462 MHz; Duty Cycle: 1:1
Medium parameters used (interpolated): f = 2462 MHz; σ = 2.051 S/m; ε_r = 50.894; ρ = 1000 kg/m^3
Phantom section: Flat Section
Measurement Standard: DASY5 (IEEE/IEC/ANSI C63.19-2007)
DASY5 Configuration
Probe: EX3DV4 - SN3745; ConvF(6.73, 6.73, 6.73); Calibrated: 2016/04/20;
Sensor-Surface: 2mm (Mechanical Surface Detection)
Electronics: DAE4 Sn1369; Calibrated: 2016/05/13
Phantom: ELI v5.0 (30deg probe tilt); Type: QDOVA002AA; Serial: TP:1203
Measurement SW: DASY52, Version 52.8 (8); SEMCAD X Version 14.6.10 (7331)

Area Scan (61x81x1): Interpolated grid: dx=1.200 mm, dy=1.200 mm
Maximum value of SAR (interpolated) = 0.227 W/kg

Zoom Scan (7x7x7)/Cube 0: Measurement grid: dx=5mm, dy=5mm, dz=5mm
Reference Value = 10.87 V/m; Power Drift = 0.00 dB
Peak SAR (extrapolated) = 0.307 W/kg
SAR(1 g) = 0.159 W/kg; SAR(10 g) = 0.079 W/kg
Maximum value of SAR (measured) = 0.235 W/kg

Date: 2016/11/28
Ambient Temp. : 24.0 degree.C. Liquid Temp.; 23.5 degree.C.

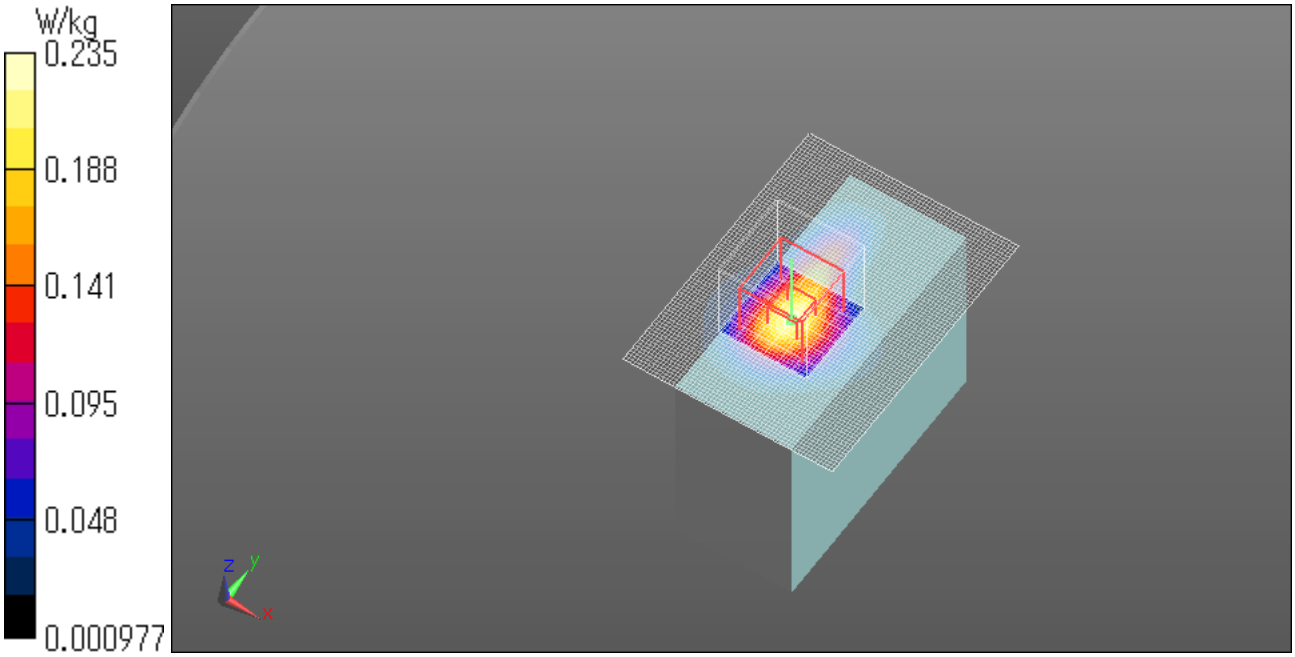

WLAN 2.4G 11b 1Mbps 2462MHz Left tilt 0mm
Communication System: UID 0, WLAN 11a/b/g/n (0); Communication System Band: 11b/g/n (2.4G); Frequency: 2462 MHz; Duty Cycle: 1:1
Medium parameters used (interpolated): f = 2462 MHz; σ = 2.051 S/m; ε_r = 50.894; ρ = 1000 kg/m^3
Phantom section: Flat Section
Measurement Standard: DASY5 (IEEE/IEC/ANSI C63.19-2007)
DASY5 Configuration
Probe: EX3DV4 - SN3745; ConvF(6.73, 6.73, 6.73); Calibrated: 2016/04/20;
Sensor-Surface: 2mm (Mechanical Surface Detection)
Electronics: DAE4 Sn1369; Calibrated: 2016/05/13
Phantom: ELI v5.0 (30deg probe tilt); Type: QDOVA002AA; Serial: TP:1203
Measurement SW: DASY52, Version 52.8 (8); SEMCAD X Version 14.6.10 (7331)

Area Scan (61x81x1): Interpolated grid: dx=1.200 mm, dy=1.200 mm
Maximum value of SAR (interpolated) = 0.325 W/kg

Zoom Scan (7x7x7)/Cube 0: Measurement grid: dx=5mm, dy=5mm, dz=5mm
Reference Value = 10.44 V/m; Power Drift = -0.21 dB
Peak SAR (extrapolated) = 0.409 W/kg
SAR(1 g) = 0.211 W/kg; SAR(10 g) = 0.102 W/kg
Maximum value of SAR (measured) = 0.312 W/kg

Date: 2016/11/28
Ambient Temp. : 24.0 degree.C. Liquid Temp.; 23.5 degree.C.

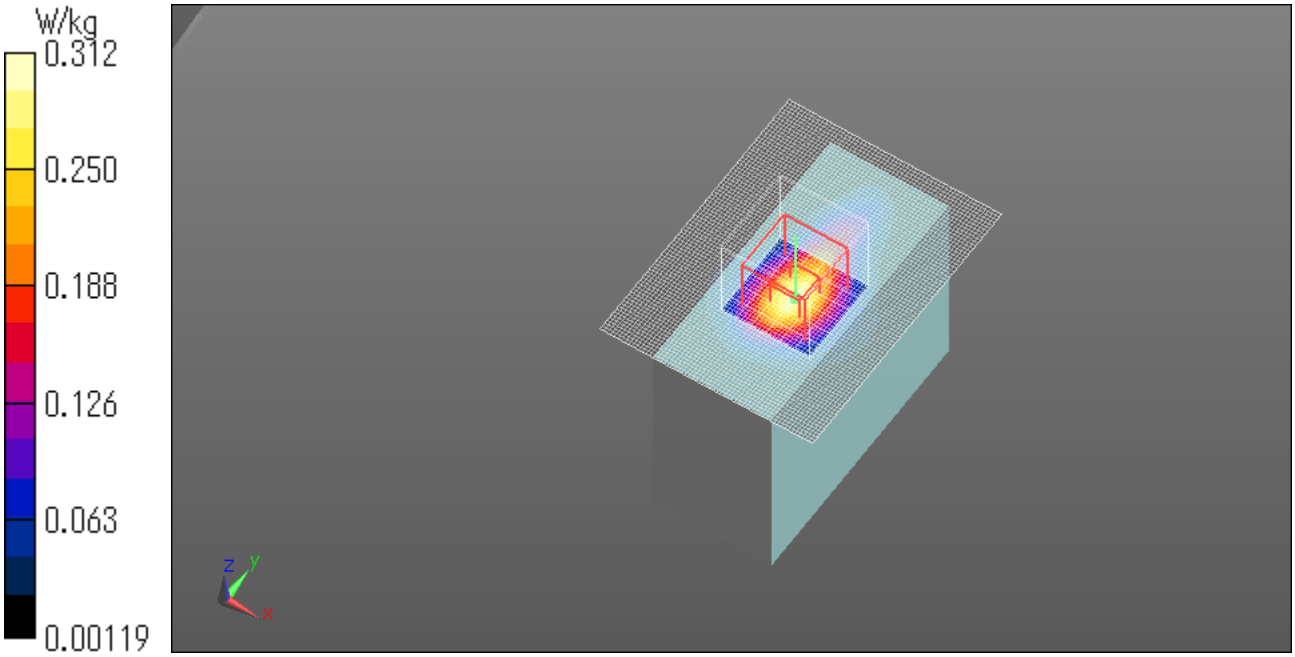

WLAN 2.4G 11b 1Mbps 2462MHz Front 0mm
Communication System: UID 0, WLAN 11a/b/g/n (0); Communication System Band: 11b/g/n (2.4G); Frequency: 2462 MHz; Duty Cycle: 1:1
Medium parameters used (interpolated): f = 2462 MHz; σ = 2.051 S/m; ε_r = 50.894; ρ = 1000 kg/m^3
Phantom section: Flat Section
Measurement Standard: DASY5 (IEEE/IEC/ANSI C63.19-2007)
DASY5 Configuration
Probe: EX3DV4 - SN3745; ConvF(6.73, 6.73, 6.73); Calibrated: 2016/04/20;
Sensor-Surface: 2mm (Mechanical Surface Detection)
Electronics: DAE4 Sn1369; Calibrated: 2016/05/13
Phantom: ELI v5.0 (30deg probe tilt); Type: QDOVA002AA; Serial: TP:1203
Measurement SW: DASY52, Version 52.8 (8); SEMCAD X Version 14.6.10 (7331)

Area Scan (61x81x1): Interpolated grid: dx=1.200 mm, dy=1.200 mm
Maximum value of SAR (interpolated) = 0.0967 W/kg

Zoom Scan (7x7x7)/Cube 0: Measurement grid: dx=5mm, dy=5mm, dz=5mm
Reference Value = 7.006 V/m; Power Drift = -0.11 dB
Peak SAR (extrapolated) = 0.126 W/kg
SAR(1 g) = 0.070 W/kg; SAR(10 g) = 0.038 W/kg
Maximum value of SAR (measured) = 0.0978 W/kg

Date: 2016/11/28
Ambient Temp. : 24.0 degree.C. Liquid Temp.; 23.5 degree.C.

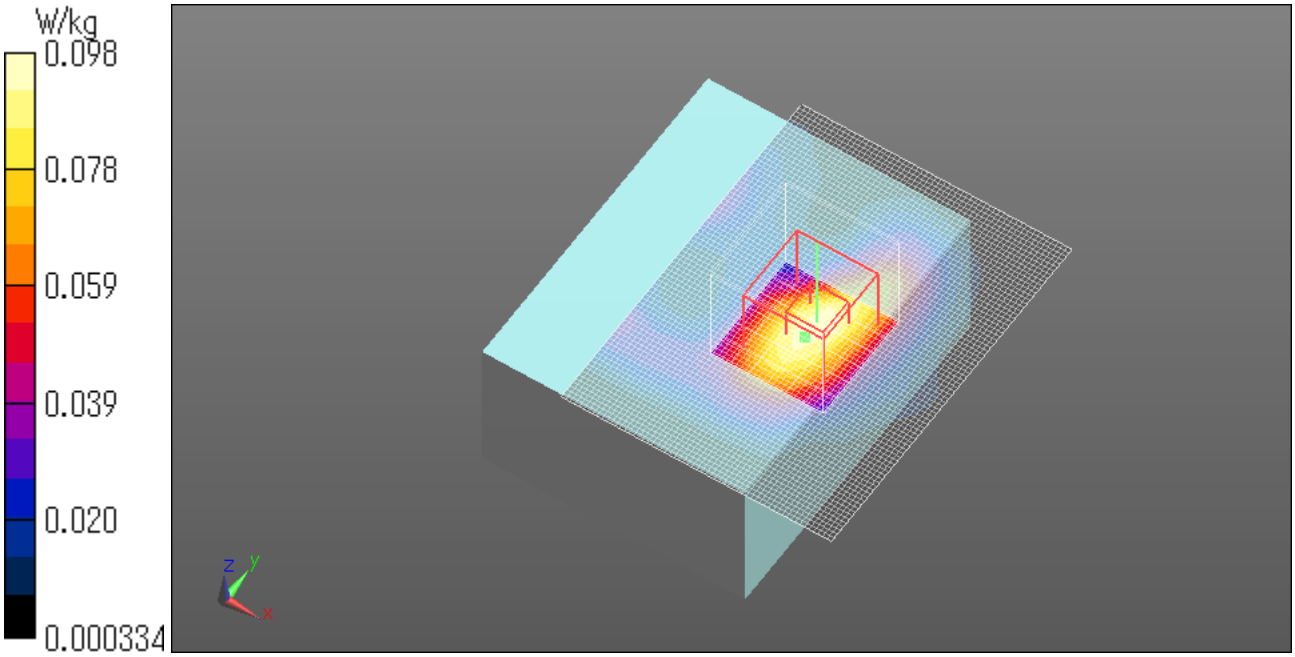

WLAN 2.4G 11b 1Mbps 2462MHz Front tilt 0mm
Communication System: UID 0, WLAN 11a/b/g/n (0); Communication System Band: 11b/g/n (2.4G); Frequency: 2462 MHz; Duty Cycle: 1:1
Medium parameters used (interpolated): f = 2462 MHz; σ = 2.051 S/m; ε_r = 50.894; ρ = 1000 kg/m^3
Phantom section: Flat Section
Measurement Standard: DASY5 (IEEE/IEC/ANSI C63.19-2007)
DASY5 Configuration
Probe: EX3DV4 - SN3745; ConvF(6.73, 6.73, 6.73); Calibrated: 2016/04/20;
Sensor-Surface: 2mm (Mechanical Surface Detection)
Electronics: DAE4 Sn1369; Calibrated: 2016/05/13
Phantom: ELI v5.0 (30deg probe tilt); Type: QDOVA002AA; Serial: TP:1203
Measurement SW: DASY52, Version 52.8 (8); SEMCAD X Version 14.6.10 (7331)

Area Scan (61x81x1): Interpolated grid: dx=1.200 mm, dy=1.200 mm
Maximum value of SAR (interpolated) = 0.258 W/kg

Zoom Scan (7x7x7)/Cube 0: Measurement grid: dx=5mm, dy=5mm, dz=5mm
Reference Value = 11.22 V/m; Power Drift = -0.04 dB
Peak SAR (extrapolated) = 0.325 W/kg
SAR(1 g) = 0.171 W/kg; SAR(10 g) = 0.089 W/kg
Maximum value of SAR (measured) = 0.248 W/kg

Date: 2016/11/28
Ambient Temp. : 24.0 degree.C. Liquid Temp.; 23.5 degree.C.

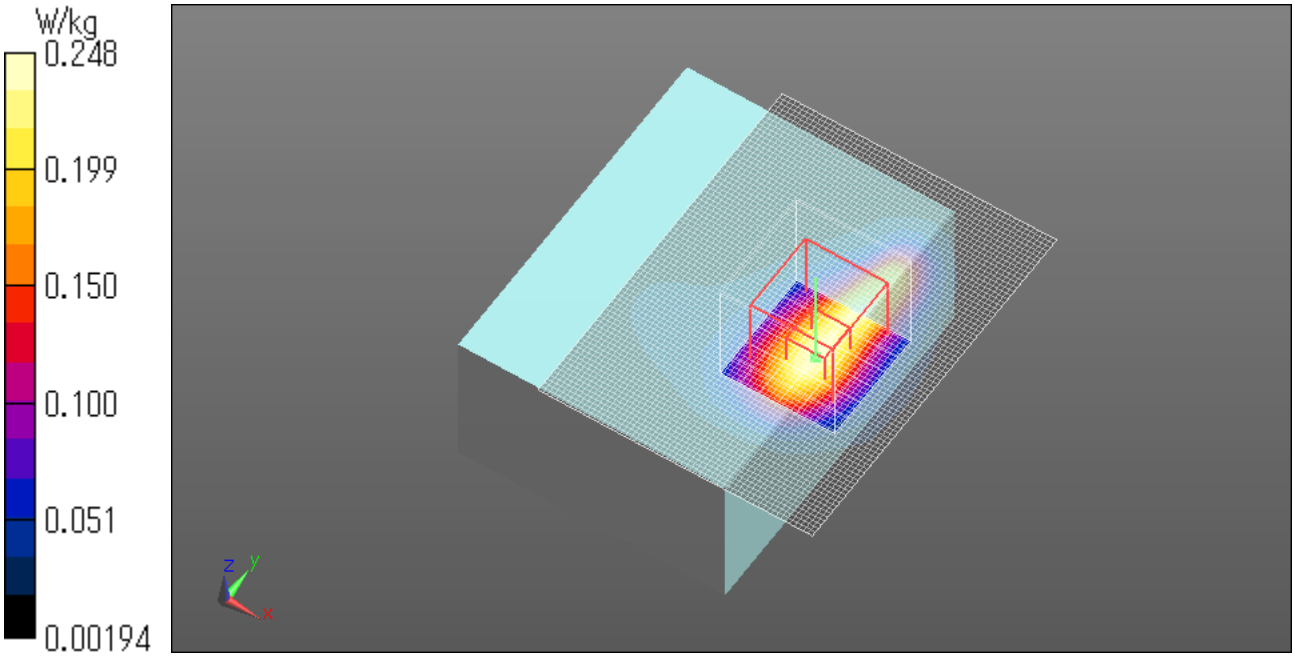

WLAN 2.4G 11b 1Mbps 2462MHz Rear 0mm
Communication System: UID 0, WLAN 11a/b/g/n (0); Communication System Band: 11b/g/n (2.4G); Frequency: 2462 MHz; Duty Cycle: 1:1
Medium parameters used (interpolated): f = 2462 MHz; σ = 2.051 S/m; ε_r = 50.894; ρ = 1000 kg/m^3
Phantom section: Flat Section
Measurement Standard: DASY5 (IEEE/IEC/ANSI C63.19-2007)
DASY5 Configuration
Probe: EX3DV4 - SN3745; ConvF(6.73, 6.73, 6.73); Calibrated: 2016/04/20;
Sensor-Surface: 2mm (Mechanical Surface Detection)
Electronics: DAE4 Sn1369; Calibrated: 2016/05/13
Phantom: ELI v5.0 (30deg probe tilt); Type: QDOVA002AA; Serial: TP:1203
Measurement SW: DASY52, Version 52.8 (8); SEMCAD X Version 14.6.10 (7331)

Area Scan (61x81x1): Interpolated grid: dx=1.200 mm, dy=1.200 mm
Maximum value of SAR (interpolated) = 0.0562 W/kg

Zoom Scan (7x7x7)/Cube 0: Measurement grid: dx=5mm, dy=5mm, dz=5mm
Reference Value = 4.787 V/m; Power Drift = -0.21 dB
Peak SAR (extrapolated) = 0.0620 W/kg
SAR(1 g) = 0.031 W/kg; SAR(10 g) = 0.016 W/kg
Maximum value of SAR (measured) = 0.0453 W/kg

Date: 2016/11/28
Ambient Temp. : 24.0 degree.C. Liquid Temp.; 23.5 degree.C.

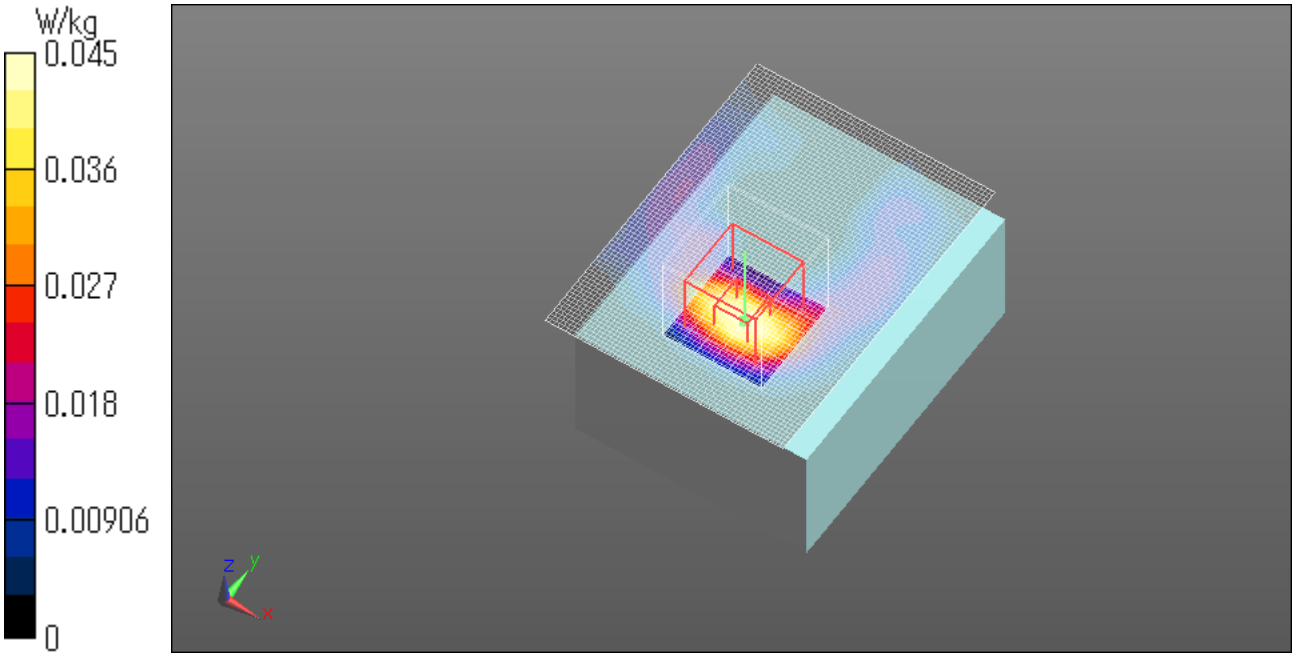

WLAN 2.4G 11b 1Mbps 2462MHz Diagonal side 0mm
Communication System: UID 0, WLAN 11a/b/g/n (0); Communication System Band: 11b/g/n (2.4G); Frequency: 2462 MHz; Duty Cycle: 1:1
Medium parameters used (interpolated): f = 2462 MHz; σ = 2.051 S/m; ε_r = 50.894; ρ = 1000 kg/m^3
Phantom section: Flat Section
Measurement Standard: DASY5 (IEEE/IEC/ANSI C63.19-2007)
DASY5 Configuration
Probe: EX3DV4 - SN3745; ConvF(6.73, 6.73, 6.73); Calibrated: 2016/04/20;
Sensor-Surface: 2mm (Mechanical Surface Detection)
Electronics: DAE4 Sn1369; Calibrated: 2016/05/13
Phantom: ELI v5.0 (30deg probe tilt); Type: QDOVA002AA; Serial: TP:1203
Measurement SW: DASY52, Version 52.8 (8); SEMCAD X Version 14.6.10 (7331)

Area Scan (61x81x1): Interpolated grid: dx=1.200 mm, dy=1.200 mm
Maximum value of SAR (interpolated) = 0.288 W/kg

Zoom Scan (7x7x7)/Cube 0: Measurement grid: dx=5mm, dy=5mm, dz=5mm
Reference Value = 12.01 V/m; Power Drift = 0.13 dB
Peak SAR (extrapolated) = 0.408 W/kg
SAR(1 g) = 0.194 W/kg; SAR(10 g) = 0.092 W/kg
Maximum value of SAR (measured) = 0.292 W/kg

Date: 2016/11/28
Ambient Temp. : 24.0 degree.C. Liquid Temp.; 23.5 degree.C.

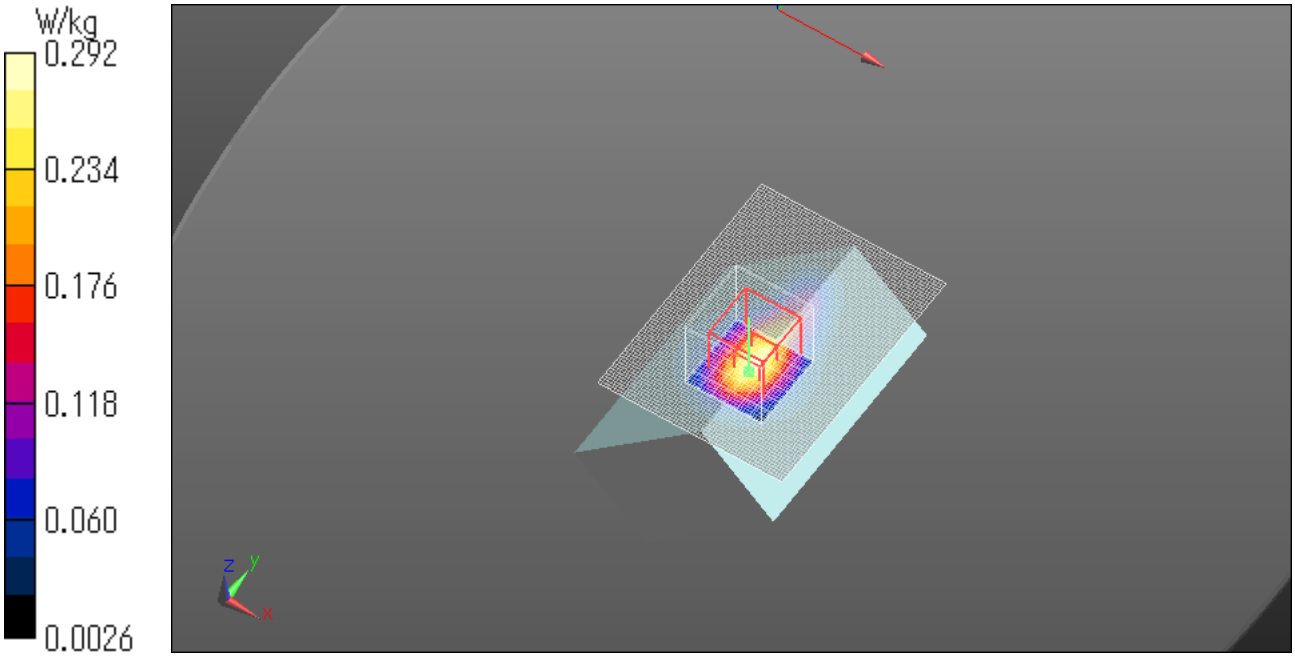

5.3GHz Measurement data

WLAN 5.3G 11a 6Mbps 5300MHz Top 0mm
Communication System: UID 0, WLAN 11a/b/g/n (0); Communication System Band: 11a/n (W52 53); Frequency: 5300 MHz; Duty Cycle: 1:1
Medium parameters used: f = 5300 MHz; σ = 5.597 S/m; ε_r = 47.726; ρ = 1000 kg/m^3
Phantom section: Flat Section
Measurement Standard: DASY5 (IEEE/IEC/ANSI C63.19-2007)
DASY5 Configuration
Probe: EX3DV4 - SN3745; ConvF(3.9, 3.9, 3.9); Calibrated: 2016/04/20;
Sensor-Surface: 1.4mm (Mechanical Surface Detection)
Electronics: DAE4 Sn1369; Calibrated: 2016/05/13
Phantom: ELI v5.0 (30deg probe tilt); Type: QDOVA002AA; Serial: TP:1203
Measurement SW: DASY52, Version 52.8 (8); SEMCAD X Version 14.6.10 (7331)

Area Scan 2 (71x101x1): Interpolated grid: dx=1.000 mm, dy=1.000 mm
Maximum value of SAR (interpolated) = 0.367 W/kg

Zoom Scan (8x8x7)/Cube 0: Measurement grid: dx=4mm, dy=4mm, dz=1.4mm
Reference Value = 8.057 V/m; Power Drift = -0.09 dB
Peak SAR (extrapolated) = 0.613 W/kg
SAR(1 g) = 0.173 W/kg; SAR(10 g) = 0.073 W/kg

Maximum value of SAR (measured) = 0.379 W/kg
Date: 2016/11/29
Ambient Temp. : 24.0 degree.C. Liquid Temp.; 23.5 degree.C.

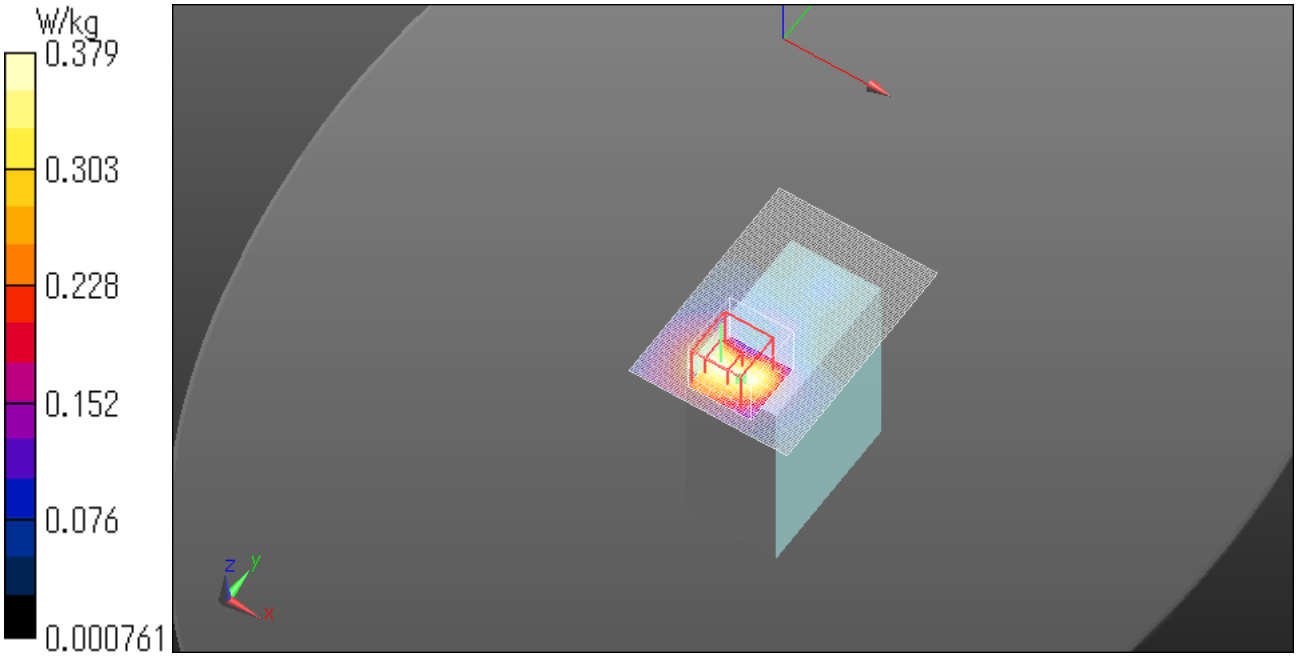

WLAN 5.3G 11a 6Mbps 5300MHz Left 0mm
Communication System: UID 0, WLAN 11a/b/g/n (0); Communication System Band: 11a/n (W52 53); Frequency: 5300 MHz; Duty Cycle: 1:1
Medium parameters used: f = 5300 MHz; σ = 5.597 S/m; ε_r = 47.726; ρ = 1000 kg/m^3
Phantom section: Flat Section
Measurement Standard: DASY5 (IEEE/IEC/ANSI C63.19-2007)
DASY5 Configuration
Probe: EX3DV4 - SN3745; ConvF(3.9, 3.9, 3.9); Calibrated: 2016/04/20;
Sensor-Surface: 1.4mm (Mechanical Surface Detection)
Electronics: DAE4 Sn1369; Calibrated: 2016/05/13
Phantom: ELI v5.0 (30deg probe tilt); Type: QDOVA002AA; Serial: TP:1203
Measurement SW: DASY52, Version 52.8 (8); SEMCAD X Version 14.6.10 (7331)

Area Scan (71x101x1): Interpolated grid: dx=1.000 mm, dy=1.000 mm
Maximum value of SAR (interpolated) = 1.75 W/kg

Zoom Scan (8x8x7)/Cube 0: Measurement grid: dx=4mm, dy=4mm, dz=1.4mm
Reference Value = 17.31 V/m; Power Drift = -0.16 dB
Peak SAR (extrapolated) = 2.61 W/kg
SAR(1 g) = 0.707 W/kg; SAR(10 g) = 0.254 W/kg
Maximum value of SAR (measured) = 1.60 W/kg

Date: 2016/11/29
Ambient Temp. : 24.0 degree.C. Liquid Temp.; 23.5 degree.C.

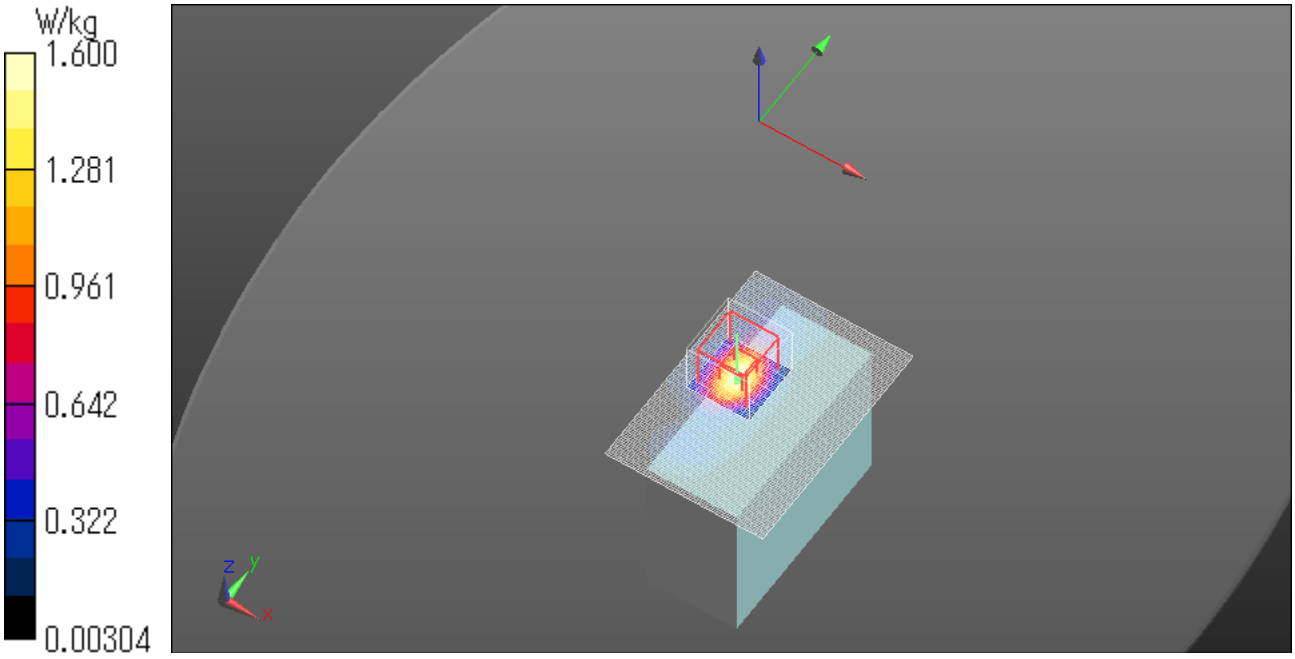

WLAN 5.3G 11a 6Mbps 5320MHz Left 0mm
Communication System: UID 0, WLAN 11a/b/g/n (0); Communication System Band: 11a/n (W52 53); Frequency: 5320 MHz; Duty Cycle: 1:1
Medium parameters used: f = 5320 MHz; σ = 5.667 S/m; ε_r = 47.712; ρ = 1000 kg/m^3
Phantom section: Flat Section
Measurement Standard: DASY5 (IEEE/IEC/ANSI C63.19-2007)
DASY5 Configuration
Probe: EX3DV4 - SN3745; ConvF(3.9, 3.9, 3.9); Calibrated: 2016/04/20;
Sensor-Surface: 1.4mm (Mechanical Surface Detection)
Electronics: DAE4 Sn1369; Calibrated: 2016/05/13
Phantom: ELI v5.0 (30deg probe tilt); Type: QDOVA002AA; Serial: TP:1203
Measurement SW: DASY52, Version 52.8 (8); SEMCAD X Version 14.6.10 (7331)

Area Scan (71x101x1): Interpolated grid: dx=1.000 mm, dy=1.000 mm
Maximum value of SAR (interpolated) = 1.89 W/kg

Zoom Scan (8x8x7)/Cube 0: Measurement grid: dx=4mm, dy=4mm, dz=1.4mm
Reference Value = 17.78 V/m; Power Drift = -0.17 dB
Peak SAR (extrapolated) = 2.87 W/kg
SAR(1 g) = 0.777 W/kg; SAR(10 g) = 0.276 W/kg
Maximum value of SAR (measured) = 1.76 W/kg

Date: 2016/11/29
Ambient Temp. : 24.0 degree.C. Liquid Temp.; 23.5 degree.C.

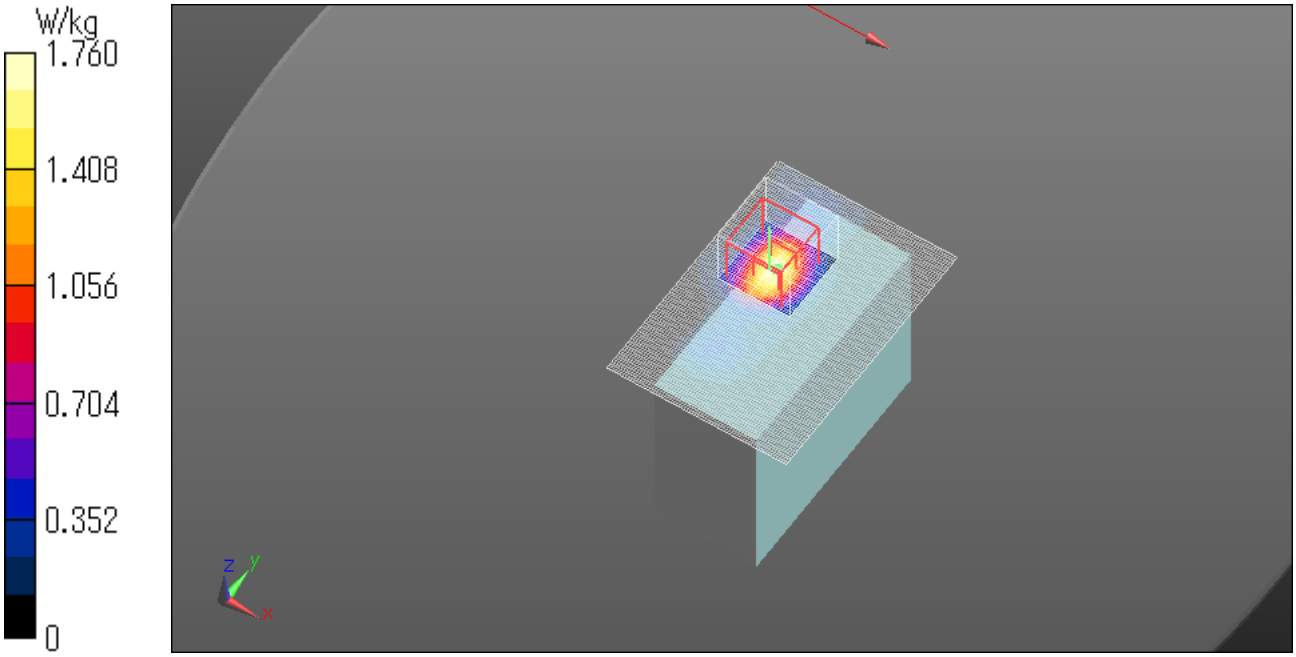

WLAN 5.3G 11a 6Mbps 5280MHz Left tilt 0mm
Communication System: UID 0, WLAN 11a/b/g/n (0); Communication System Band: 11a/n (W52 53); Frequency: 5280 MHz; Duty Cycle: 1:1
Medium parameters used: f = 5280 MHz; σ = 5.529 S/m; ε_r = 47.898; ρ = 1000 kg/m^3
Phantom section: Flat Section
Measurement Standard: DASY5 (IEEE/IEC/ANSI C63.19-2007)
DASY5 Configuration
Probe: EX3DV4 - SN3745; ConvF(3.9, 3.9, 3.9); Calibrated: 2016/04/20;
Sensor-Surface: 1.4mm (Mechanical Surface Detection)
Electronics: DAE4 Sn1369; Calibrated: 2016/05/13
Phantom: ELI v5.0 (30deg probe tilt); Type: QDOVA002AA; Serial: TP:1203
Measurement SW: DASY52, Version 52.8 (8); SEMCAD X Version 14.6.10 (7331)

Area Scan (71x101x1): Interpolated grid: dx=1.000 mm, dy=1.000 mm
Maximum value of SAR (interpolated) = 2.16 W/kg

Zoom Scan (8x8x7)/Cube 0: Measurement grid: dx=4mm, dy=4mm, dz=1.4mm
Reference Value = 19.82 V/m; Power Drift = -0.11 dB
Peak SAR (extrapolated) = 3.46 W/kg
SAR(1 g) = 0.922 W/kg; SAR(10 g) = 0.319 W/kg
Maximum value of SAR (measured) = 2.11 W/kg

Date: 2016/11/29
Ambient Temp. : 24.0 degree.C. Liquid Temp.; 23.5 degree.C.

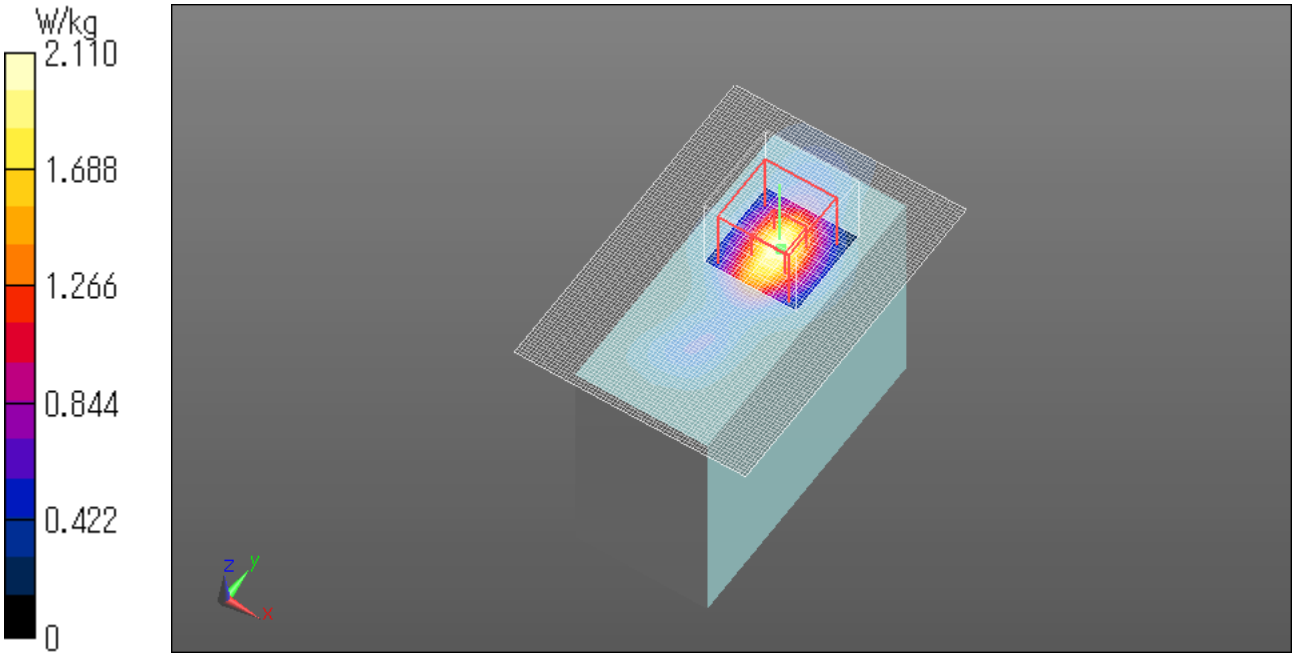

WLAN 5.3G 11a 6Mbps 5300MHz Left tilt 0mm
Communication System: UID 0, WLAN 11a/b/g/n (0); Communication System Band: 11a/n (W52 53); Frequency: 5300 MHz; Duty Cycle: 1:1
Medium parameters used: f = 5300 MHz; σ = 5.597 S/m; ε_r = 47.726; ρ = 1000 kg/m^3
Phantom section: Flat Section
Measurement Standard: DASY5 (IEEE/IEC/ANSI C63.19-2007)
DASY5 Configuration
Probe: EX3DV4 - SN3745; ConvF(3.9, 3.9, 3.9); Calibrated: 2016/04/20;
Sensor-Surface: 1.4mm (Mechanical Surface Detection)
Electronics: DAE4 Sn1369; Calibrated: 2016/05/13
Phantom: ELI v5.0 (30deg probe tilt); Type: QDOVA002AA; Serial: TP:1203
Measurement SW: DASY52, Version 52.8 (8); SEMCAD X Version 14.6.10 (7331)

Area Scan (71x101x1): Interpolated grid: dx=1.000 mm, dy=1.000 mm
Maximum value of SAR (interpolated) = 2.22 W/kg

Zoom Scan (8x8x7)/Cube 0: Measurement grid: dx=4mm, dy=4mm, dz=1.4mm
Reference Value = 19.99 V/m; Power Drift = -0.14 dB
Peak SAR (extrapolated) = 3.64 W/kg
SAR(1 g) = 0.956 W/kg; SAR(10 g) = 0.331 W/kg
Maximum value of SAR (measured) = 2.20 W/kg

Date: 2016/11/29
Ambient Temp. : 24.0 degree.C. Liquid Temp.; 23.5 degree.C.

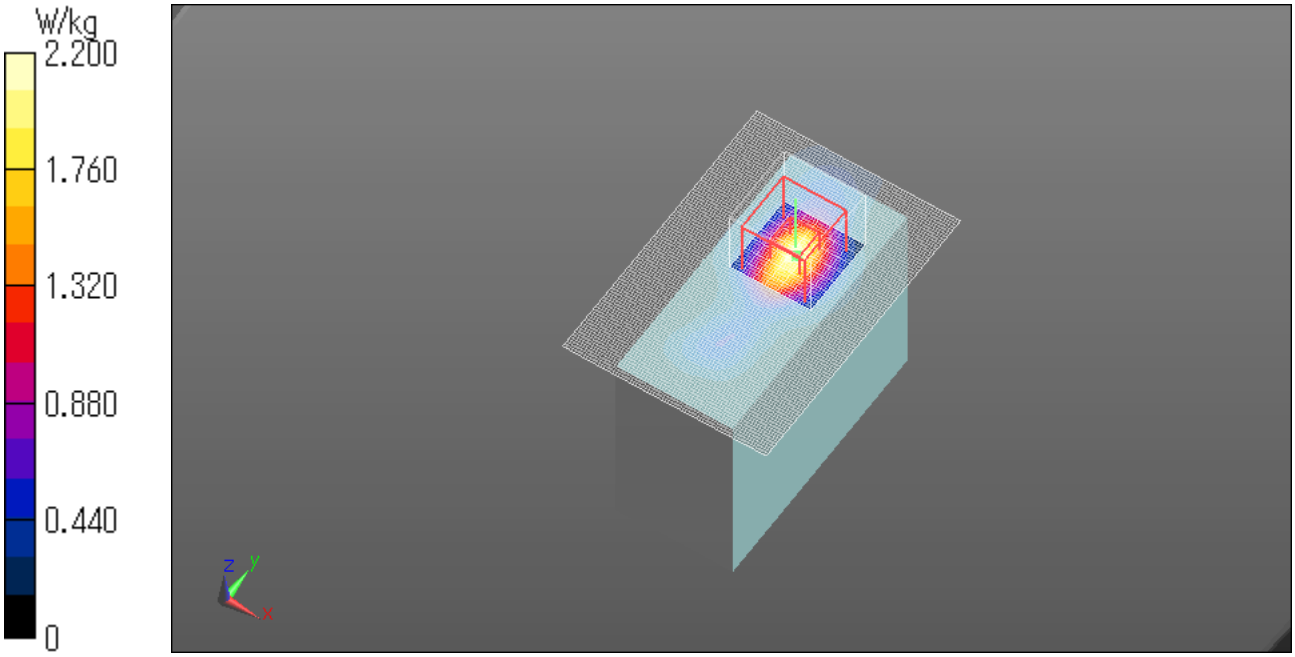

WLAN 5.3G 11a 6Mbps 5320MHz Left tilt 0mm
Communication System: UID 0, WLAN 11a/b/g/n (0); Communication System Band: 11a/n (W52 53); Frequency: 5320 MHz; Duty Cycle: 1:1
Medium parameters used: f = 5320 MHz; σ = 5.667 S/m; ε_r = 47.712; ρ = 1000 kg/m^3
Phantom section: Flat Section
Measurement Standard: DASY5 (IEEE/IEC/ANSI C63.19-2007)
DASY5 Configuration
Probe: EX3DV4 - SN3745; ConvF(3.9, 3.9, 3.9); Calibrated: 2016/04/20;
Sensor-Surface: 1.4mm (Mechanical Surface Detection)
Electronics: DAE4 Sn1369; Calibrated: 2016/05/13
Phantom: ELI v5.0 (30deg probe tilt); Type: QDOVA002AA; Serial: TP:1203
Measurement SW: DASY52, Version 52.8 (8); SEMCAD X Version 14.6.10 (7331)

Area Scan (71x101x1): Interpolated grid: dx=1.000 mm, dy=1.000 mm
Maximum value of SAR (interpolated) = 2.31 W/kg

Zoom Scan (8x8x7)/Cube 0: Measurement grid: dx=4mm, dy=4mm, dz=1.4mm
Reference Value = 20.11 V/m; Power Drift = -0.18 dB
Peak SAR (extrapolated) = 3.71 W/kg
SAR(1 g) = 0.969 W/kg; SAR(10 g) = 0.334 W/kg
Maximum value of SAR (measured) = 2.24 W/kg

Date: 2016/11/29
Ambient Temp. : 24.0 degree.C. Liquid Temp.; 23.5 degree.C.

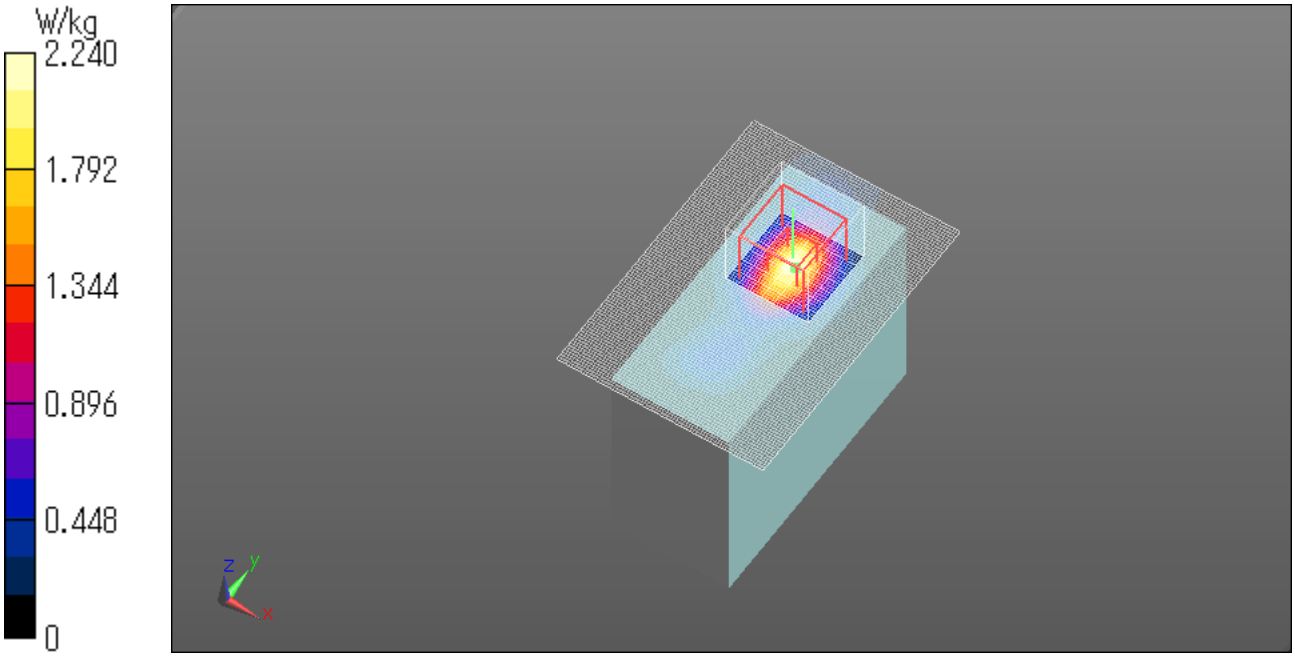

WLAN 5.3G 11a 6Mbps 5300MHz Front 0mm
Communication System: UID 0, WLAN 11a/b/g/n (0); Communication System Band: 11a/n (W52 53); Frequency: 5300 MHz; Duty Cycle: 1:1
Medium parameters used: f = 5300 MHz; σ = 5.597 S/m; ε_r = 47.726; ρ = 1000 kg/m^3
Phantom section: Flat Section
Measurement Standard: DASY5 (IEEE/IEC/ANSI C63.19-2007)
DASY5 Configuration
Probe: EX3DV4 - SN3745; ConvF(3.9, 3.9, 3.9); Calibrated: 2016/04/20;
Sensor-Surface: 1.4mm (Mechanical Surface Detection)
Electronics: DAE4 Sn1369; Calibrated: 2016/05/13
Phantom: ELI v5.0 (30deg probe tilt); Type: QDOVA002AA; Serial: TP:1203
Measurement SW: DASY52, Version 52.8 (8); SEMCAD X Version 14.6.10 (7331)

Area Scan (71x101x1): Interpolated grid: dx=1.000 mm, dy=1.000 mm
Maximum value of SAR (interpolated) = 0.463 W/kg

Zoom Scan (8x8x7)/Cube 0: Measurement grid: dx=4mm, dy=4mm, dz=1.4mm
Reference Value = 9.309 V/m; Power Drift = -0.10 dB
Peak SAR (extrapolated) = 0.740 W/kg
SAR(1 g) = 0.215 W/kg; SAR(10 g) = 0.086 W/kg
Maximum value of SAR (measured) = 0.467 W/kg

Date: 2016/11/29
Ambient Temp. : 24.0 degree.C. Liquid Temp.; 23.5 degree.C.

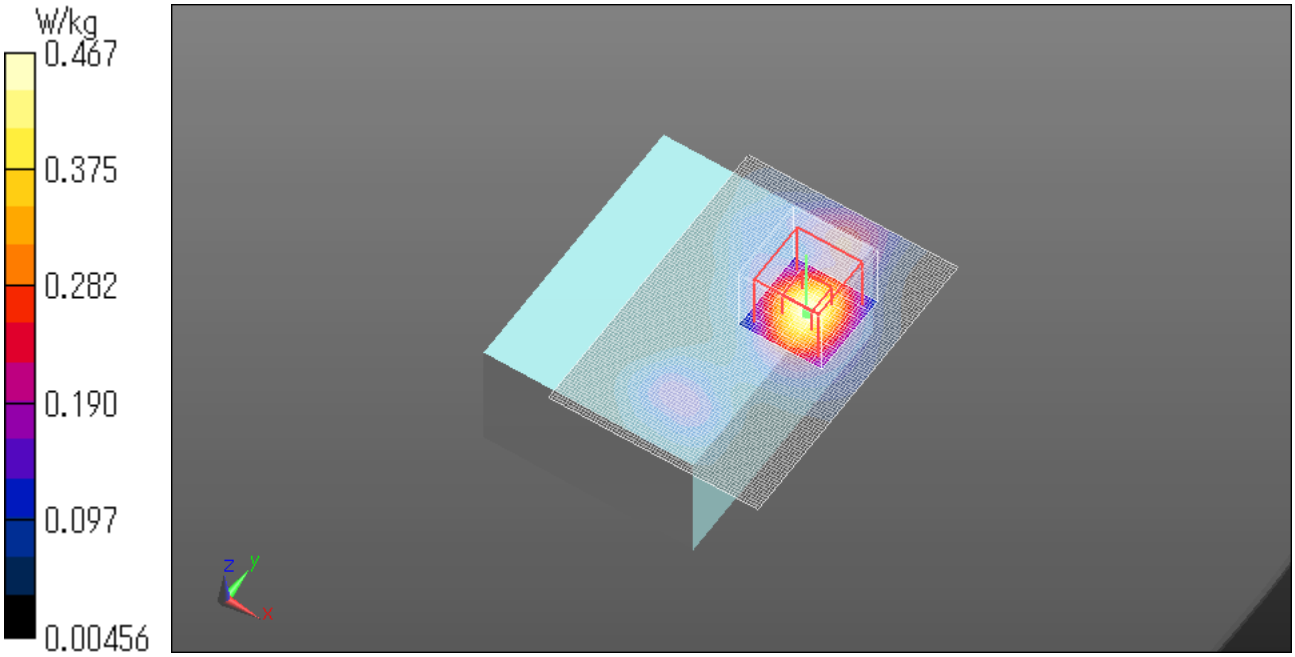

WLAN 5.3G 11a 6Mbps 5300MHz Front tilt 0mm
Communication System: UID 0, WLAN 11a/b/g/n (0); Communication System Band: 11a/n (W52 53); Frequency: 5300 MHz; Duty Cycle: 1:1
Medium parameters used: f = 5300 MHz; σ = 5.597 S/m; ε_r = 47.726; ρ = 1000 kg/m^3
Phantom section: Flat Section
Measurement Standard: DASY5 (IEEE/IEC/ANSI C63.19-2007)
DASY5 Configuration
Probe: EX3DV4 - SN3745; ConvF(3.9, 3.9, 3.9); Calibrated: 2016/04/20;
Sensor-Surface: 1.4mm (Mechanical Surface Detection)
Electronics: DAE4 Sn1369; Calibrated: 2016/05/13
Phantom: ELI v5.0 (30deg probe tilt); Type: QDOVA002AA; Serial: TP:1203
Measurement SW: DASY52, Version 52.8 (8); SEMCAD X Version 14.6.10 (7331)

Area Scan (71x101x1): Interpolated grid: dx=1.000 mm, dy=1.000 mm
Maximum value of SAR (interpolated) = 1.50 W/kg

Zoom Scan (8x8x7)/Cube 0: Measurement grid: dx=4mm, dy=4mm, dz=1.4mm
Reference Value = 16.97 V/m; Power Drift = -0.11 dB
Peak SAR (extrapolated) = 2.60 W/kg
SAR(1 g) = 0.651 W/kg; SAR(10 g) = 0.208 W/kg
Maximum value of SAR (measured) = 1.50 W/kg

Date: 2016/11/29
Ambient Temp. : 24.0 degree.C. Liquid Temp.; 23.5 degree.C.

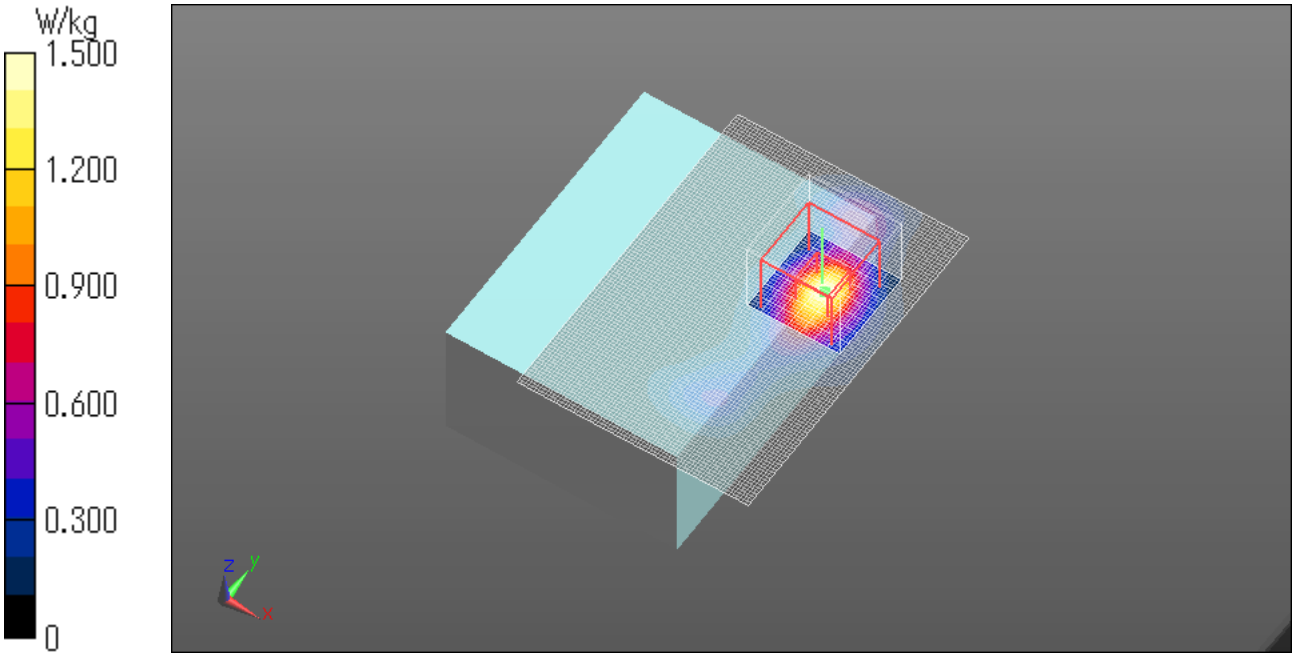

WLAN 5.3G 11a 6Mbps 5320MHz Front tilt 0mm
Communication System: UID 0, WLAN 11a/b/g/n (0); Communication System Band: 11a/n (W52 53); Frequency: 5320 MHz; Duty Cycle: 1:1
Medium parameters used: f = 5320 MHz; σ = 5.667 S/m; ε_r = 47.712; ρ = 1000 kg/m^3
Phantom section: Flat Section
Measurement Standard: DASY5 (IEEE/IEC/ANSI C63.19-2007)
DASY5 Configuration
Probe: EX3DV4 - SN3745; ConvF(3.9, 3.9, 3.9); Calibrated: 2016/04/20;
Sensor-Surface: 1.4mm (Mechanical Surface Detection)
Electronics: DAE4 Sn1369; Calibrated: 2016/05/13
Phantom: ELI v5.0 (30deg probe tilt); Type: QDOVA002AA; Serial: TP:1203
Measurement SW: DASY52, Version 52.8 (8); SEMCAD X Version 14.6.10 (7331)

Area Scan (71x101x1): Interpolated grid: dx=1.000 mm, dy=1.000 mm
Maximum value of SAR (interpolated) = 1.65 W/kg

Zoom Scan (8x8x7)/Cube 0: Measurement grid: dx=4mm, dy=4mm, dz=1.4mm
Reference Value = 17.41 V/m; Power Drift = -0.19 dB
Peak SAR (extrapolated) = 2.72 W/kg
SAR(1 g) = 0.693 W/kg; SAR(10 g) = 0.227 W/kg
Maximum value of SAR (measured) = 1.59 W/kg

Date: 2016/11/29
Ambient Temp. : 24.0 degree.C. Liquid Temp.; 23.5 degree.C.

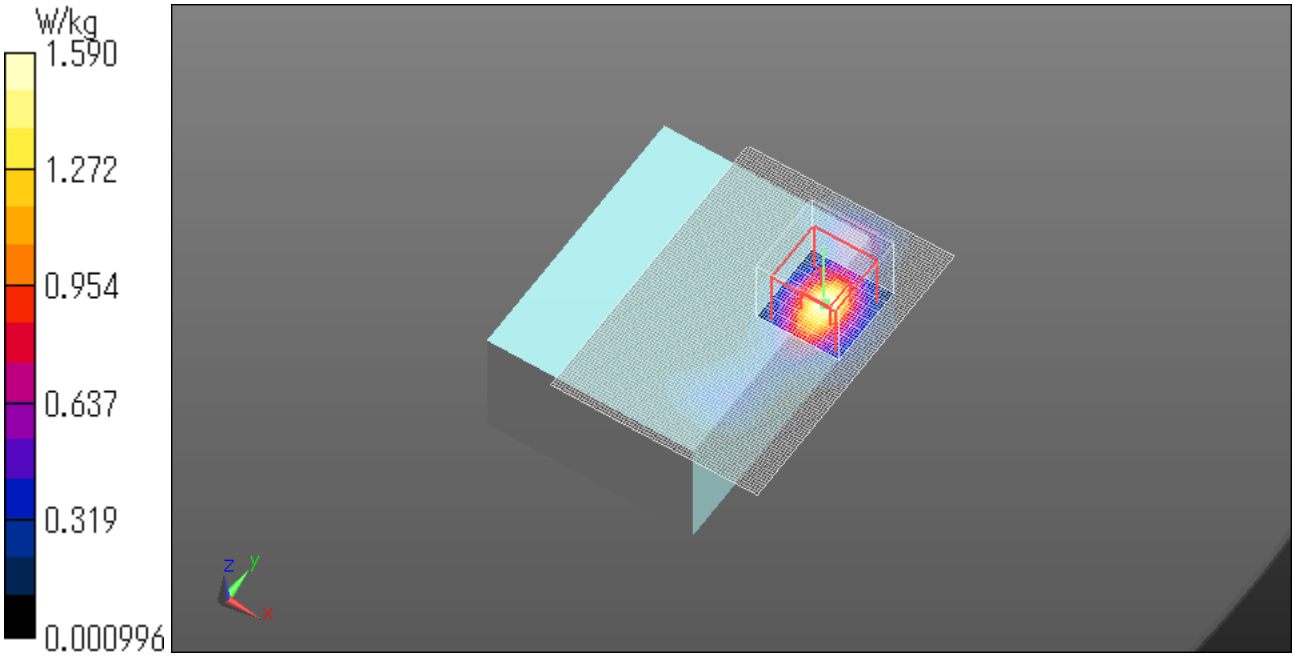

WLAN 5.3G 11a 6Mbps 5300MHz Rear 0mm
Communication System: UID 0, WLAN 11a/b/g/n (0); Communication System Band: 11a/n (W52 53); Frequency: 5300 MHz; Duty Cycle: 1:1
Medium parameters used: f = 5300 MHz; σ = 5.597 S/m; ε_r = 47.726; ρ = 1000 kg/m^3
Phantom section: Flat Section
Measurement Standard: DASY5 (IEEE/IEC/ANSI C63.19-2007)
DASY5 Configuration
Probe: EX3DV4 - SN3745; ConvF(3.9, 3.9, 3.9); Calibrated: 2016/04/20;
Sensor-Surface: 1.4mm (Mechanical Surface Detection)
Electronics: DAE4 Sn1369; Calibrated: 2016/05/13
Phantom: ELI v5.0 (30deg probe tilt); Type: QDOVA002AA; Serial: TP:1203
Measurement SW: DASY52, Version 52.8 (8); SEMCAD X Version 14.6.10 (7331)

Area Scan 2 (71x101x1): Interpolated grid: dx=1.000 mm, dy=1.000 mm
Maximum value of SAR (interpolated) = 0.132 W/kg

Zoom Scan (8x8x7)/Cube 0: Measurement grid: dx=4mm, dy=4mm, dz=1.4mm
Reference Value = 4.817 V/m; Power Drift = -0.06 dB
Peak SAR (extrapolated) = 0.222 W/kg
SAR(1 g) = 0.057 W/kg; SAR(10 g) = 0.022 W/kg
Maximum value of SAR (measured) = 0.126 W/kg

Date: 2016/11/29
Ambient Temp. : 24.0 degree.C. Liquid Temp.; 23.5 degree.C.

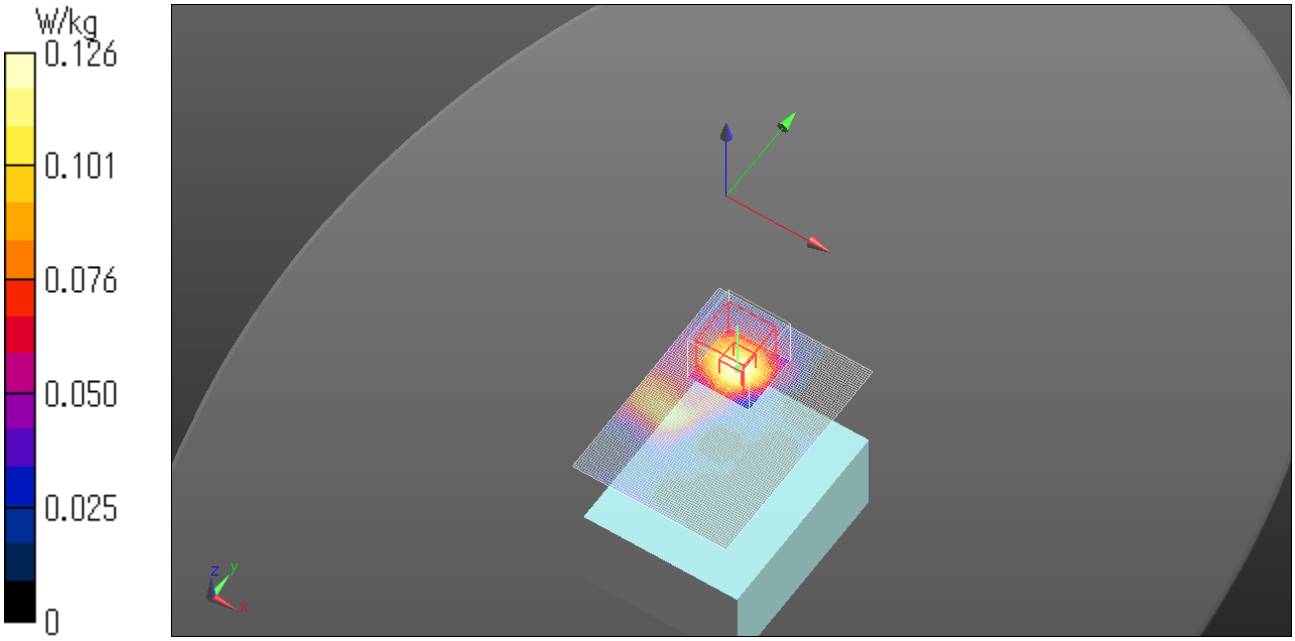

WLAN 5.3G 11a 6Mbps 5300MHz Diagonal side 0mm
Communication System: UID 0, WLAN 5GHz (0); Communication System Band: WLAN 5GHz Low; Frequency: 5300 MHz; Duty Cycle: 1:1
Medium parameters used: f = 5300 MHz; σ = 5.597 S/m; ε_r = 47.726; ρ = 1000 kg/m^3
Phantom section: Flat Section
Measurement Standard: DASY5 (IEEE/IEC/ANSI C63.19-2007)
DASY5 Configuration
Probe: EX3DV4 - SN3745; ConvF(3.9, 3.9, 3.9); Calibrated: 2016/04/20;
Sensor-Surface: 1.4mm (Mechanical Surface Detection)
Electronics: DAE4 Sn1369; Calibrated: 2016/05/13
Phantom: ELI v5.0 (30deg probe tilt); Type: QDOVA002AA; Serial: TP:1203
Measurement SW: DASY52, Version 52.8 (8); SEMCAD X Version 14.6.10 (7331)

Area Scan (71x101x1): Interpolated grid: dx=1.000 mm, dy=1.000 mm
Maximum value of SAR (interpolated) = 2.10 W/kg

Zoom Scan (8x8x7)/Cube 0: Measurement grid: dx=4mm, dy=4mm, dz=1.4mm
Reference Value = 19.70 V/m; Power Drift = 0.14 dB
Peak SAR (extrapolated) = 3.65 W/kg
SAR(1 g) = 0.924 W/kg; SAR(10 g) = 0.304 W/kg
Maximum value of SAR (measured) = 2.20 W/kg

Date: 2016/11/29
Ambient Temp. : 24.0 degree.C. Liquid Temp.; 23.5 degree.C.

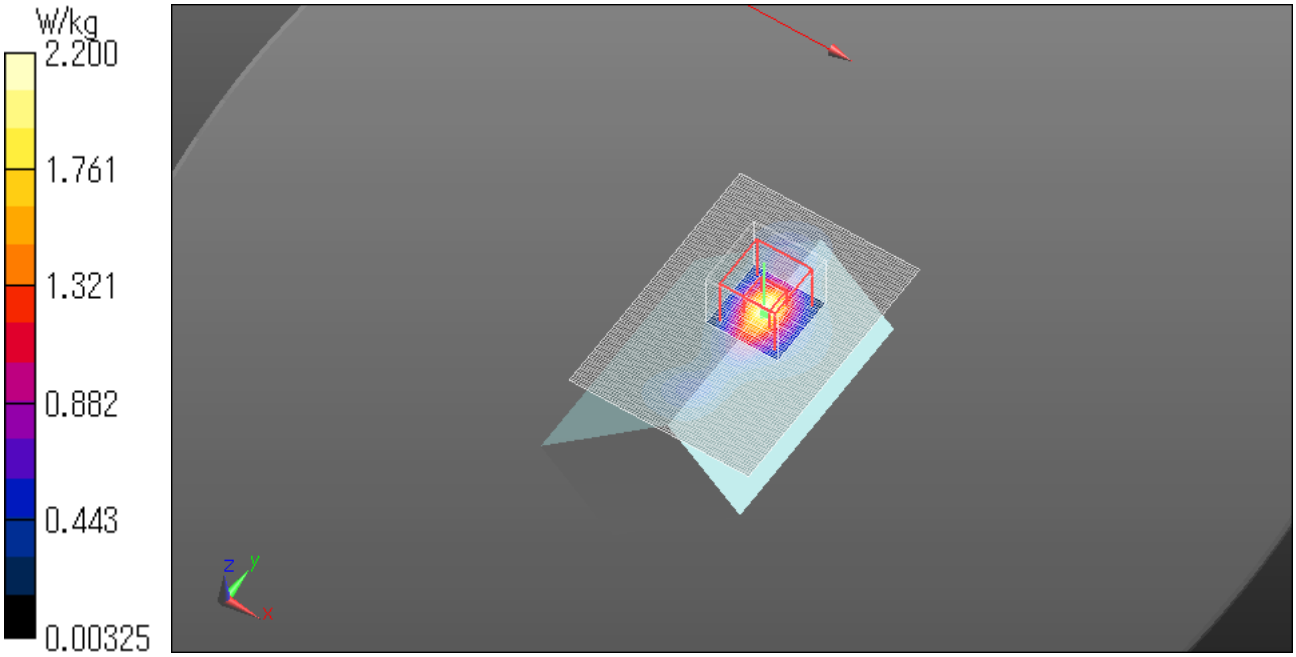

WLAN 5.3G 11a 6Mbps 5320MHz Diagonal side 0mm
Communication System: UID 0, WLAN 5GHz (0); Communication System Band: WLAN 5GHz Low; Frequency: 5320 MHz; Duty Cycle: 1:1
Medium parameters used: f = 5320 MHz; σ = 5.667 S/m; ε_r = 47.712; ρ = 1000 kg/m^3
Phantom section: Flat Section
Measurement Standard: DASY5 (IEEE/IEC/ANSI C63.19-2007)
DASY5 Configuration
Probe: EX3DV4 - SN3745; ConvF(3.9, 3.9, 3.9); Calibrated: 2016/04/20;
Sensor-Surface: 1.4mm (Mechanical Surface Detection)
Electronics: DAE4 Sn1369; Calibrated: 2016/05/13
Phantom: ELI v5.0 (30deg probe tilt); Type: QDOVA002AA; Serial: TP:1203
Measurement SW: DASY52, Version 52.8 (8); SEMCAD X Version 14.6.10 (7331)

Area Scan (71x101x1): Interpolated grid: dx=1.000 mm, dy=1.000 mm
Maximum value of SAR (interpolated) = 2.10 W/kg

Zoom Scan (8x8x7)/Cube 0: Measurement grid: dx=4mm, dy=4mm, dz=1.4mm
Reference Value = 19.64 V/m; Power Drift = -0.10 dB
Peak SAR (extrapolated) = 3.69 W/kg
SAR(1 g) = 0.922 W/kg; SAR(10 g) = 0.302 W/kg
Maximum value of SAR (measured) = 2.22 W/kg

Date: 2016/11/29
Ambient Temp. : 24.0 degree.C. Liquid Temp.; 23.5 degree.C.

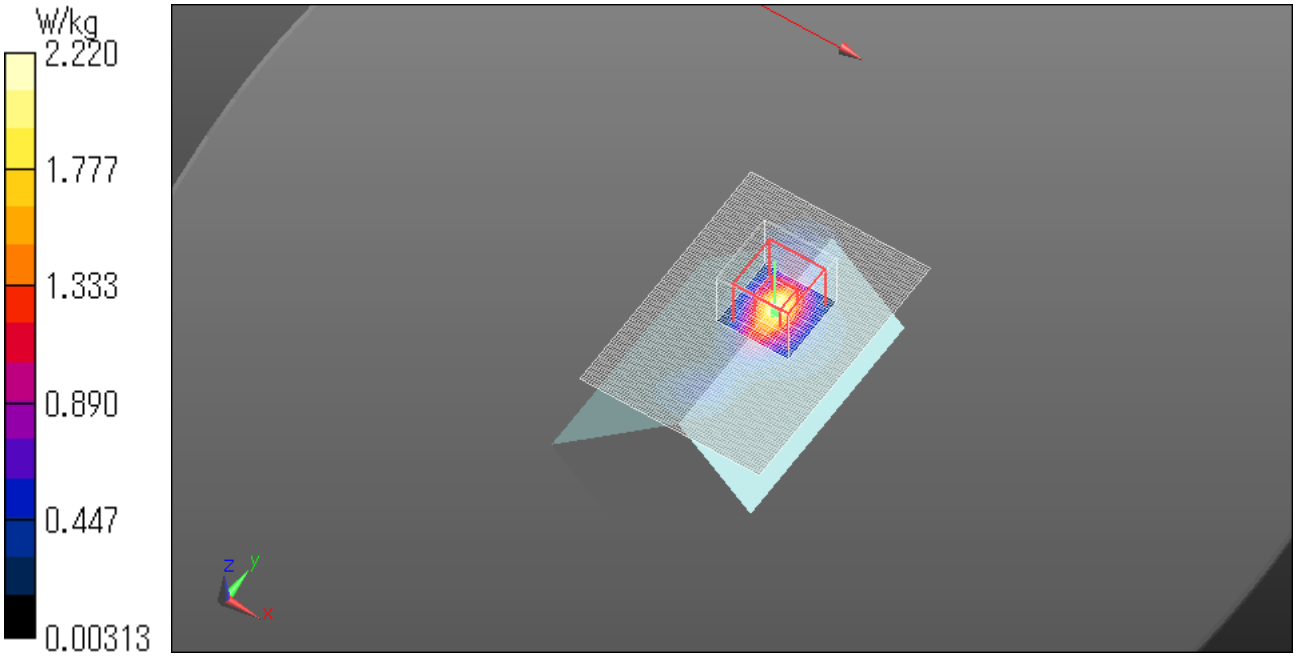

5.5GHz Measurement data

WLAN 5.5G 11a 6Mbps 5720MHz Top 0mm

Communication System: UID 0, WLAN 5GHz (0); Communication System Band: WLAN 5GHz Mid; Frequency: 5720 MHz; Duty Cycle: 1:1
Medium parameters used: f = 5720 MHz; σ = 6.127 S/m; ε_r = 47.373; ρ = 1000 kg/m^3
Phantom section: Flat Section
Measurement Standard: DASY5 (IEEE/IEC/ANSI C63.19-2007)
DASY5 Configuration
Probe: EX3DV4 - SN3745; ConvF(3.6, 3.6, 3.6); Calibrated: 2016/04/20;
Sensor-Surface: 1.4mm (Mechanical Surface Detection)
Electronics: DAE4 Sn1369; Calibrated: 2016/05/13
Phantom: ELI v5.0 (30deg probe tilt); Type: QDOVA002AA; Serial: TP:1203
Measurement SW: DASY52, Version 52.8 (8); SEMCAD X Version 14.6.10 (7331)

Area Scan (71x101x1): Interpolated grid: dx=1.000 mm, dy=1.000 mm
Maximum value of SAR (interpolated) = 0.520 W/kg

Zoom Scan (8x8x7)/Cube 0: Measurement grid: dx=4mm, dy=4mm, dz=1.4mm
Reference Value = 9.672 V/m; Power Drift = -0.14 dB
Peak SAR (extrapolated) = 0.979 W/kg
SAR(1 g) = 0.275 W/kg; SAR(10 g) = 0.112 W/kg
Maximum value of SAR (measured) = 0.599 W/kg

Date: 2016/11/29
Ambient Temp. : 24.0 degree.C. Liquid Temp.; 23.5 degree.C.

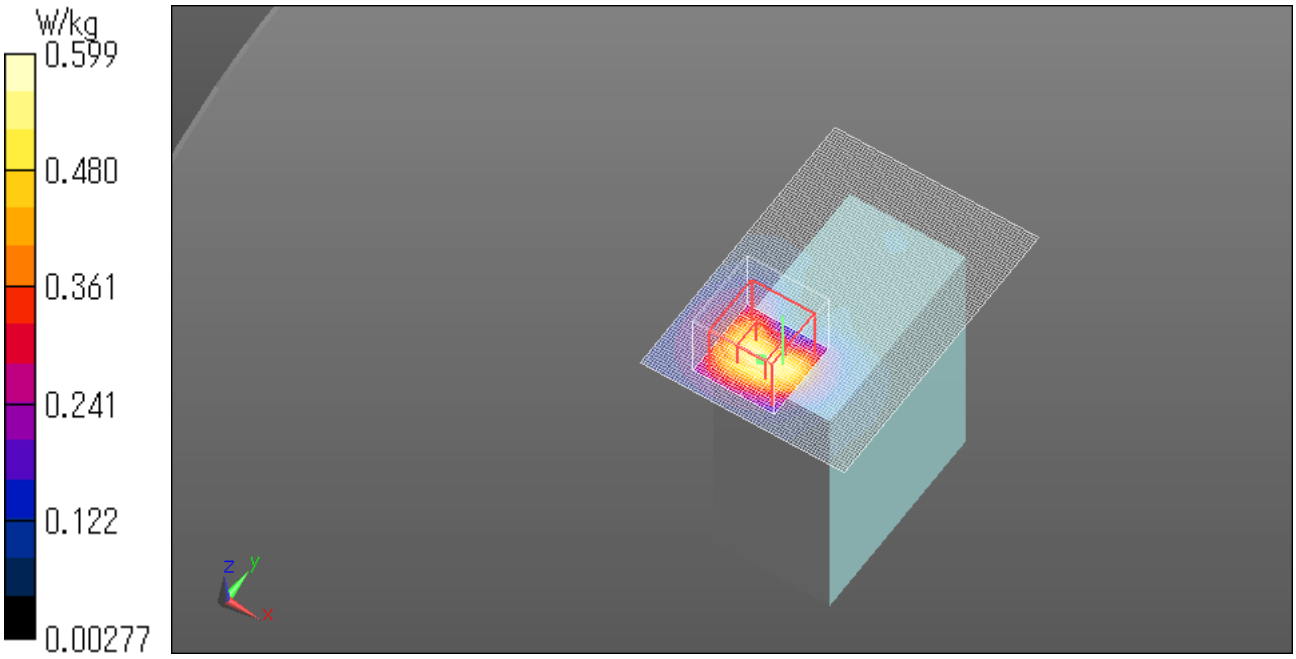

WLAN 5.5G 11a 6Mbps 5700MHz Left 0mm
Communication System: UID 0, WLAN 5GHz (0); Communication System Band: WLAN 5GHz Mid; Frequency: 5700 MHz; Duty Cycle: 1:1
Medium parameters used: f = 5700 MHz; σ = 6.084 S/m; ε_r = 47.228; ρ = 1000 kg/m^3
Phantom section: Flat Section
Measurement Standard: DASY5 (IEEE/IEC/ANSI C63.19-2007)
DASY5 Configuration
Probe: EX3DV4 - SN3745; ConvF(3.6, 3.6, 3.6); Calibrated: 2016/04/20;
Sensor-Surface: 1.4mm (Mechanical Surface Detection)
Electronics: DAE4 Sn1369; Calibrated: 2016/05/13
Phantom: ELI v5.0 (30deg probe tilt); Type: QDOVA002AA; Serial: TP:1203
Measurement SW: DASY52, Version 52.8 (8); SEMCAD X Version 14.6.10 (7331)

Area Scan (71x101x1): Interpolated grid: dx=1.000 mm, dy=1.000 mm
Maximum value of SAR (interpolated) = 2.18 W/kg

Zoom Scan (8x8x7)/Cube 0: Measurement grid: dx=4mm, dy=4mm, dz=1.4mm
Reference Value = 18.01 V/m; Power Drift = -0.03 dB
Peak SAR (extrapolated) = 3.16 W/kg
SAR(1 g) = 0.819 W/kg; SAR(10 g) = 0.281 W/kg
Maximum value of SAR (measured) = 1.96 W/kg

Date: 2016/11/29
Ambient Temp. : 24.0 degree.C. Liquid Temp.; 23.5 degree.C.

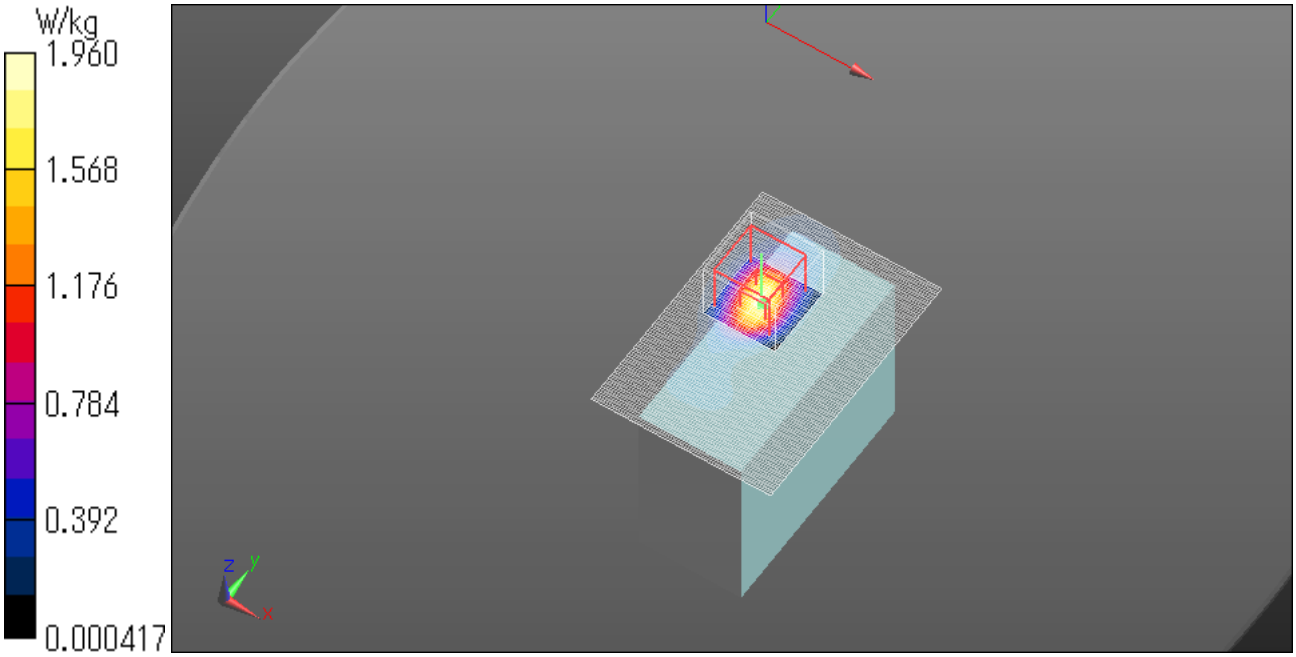

WLAN 5.5G 11a 6Mbps 5720MHz Left 0mm
Communication System: UID 0, WLAN 5GHz (0); Communication System Band: WLAN 5GHz Mid; Frequency: 5720 MHz; Duty Cycle: 1:1
Medium parameters used: f = 5720 MHz; σ = 6.127 S/m; ε_r = 47.373; ρ = 1000 kg/m^3
Phantom section: Flat Section
Measurement Standard: DASY5 (IEEE/IEC/ANSI C63.19-2007)
DASY5 Configuration
Probe: EX3DV4 - SN3745; ConvF(3.6, 3.6, 3.6); Calibrated: 2016/04/20;
Sensor-Surface: 1.4mm (Mechanical Surface Detection)
Electronics: DAE4 Sn1369; Calibrated: 2016/05/13
Phantom: ELI v5.0 (30deg probe tilt); Type: QDOVA002AA; Serial: TP:1203
Measurement SW: DASY52, Version 52.8 (8); SEMCAD X Version 14.6.10 (7331)

Area Scan (71x101x1): Interpolated grid: dx=1.000 mm, dy=1.000 mm
Maximum value of SAR (interpolated) = 2.24 W/kg

Zoom Scan (8x8x7)/Cube 0: Measurement grid: dx=4mm, dy=4mm, dz=1.4mm
Reference Value = 18.46 V/m; Power Drift = -0.19 dB
Peak SAR (extrapolated) = 3.32 W/kg
SAR(1 g) = 0.870 W/kg; SAR(10 g) = 0.299 W/kg
Maximum value of SAR (measured) = 2.04 W/kg

Date: 2016/11/29
Ambient Temp. : 24.0 degree.C. Liquid Temp.; 23.5 degree.C.

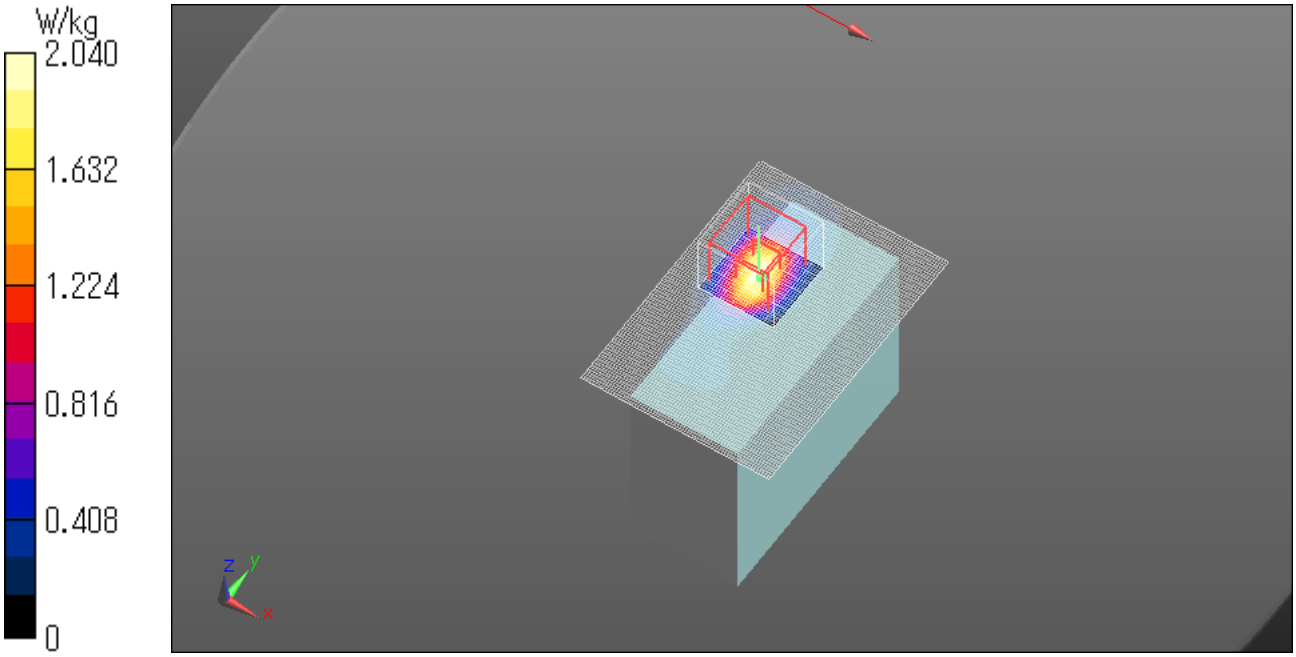

WLAN 5.5G 11a 6Mbps 5700MHz Left tilt 0mm
Communication System: UID 0, WLAN 5GHz (0); Communication System Band: WLAN 5GHz Mid; Frequency: 5700 MHz; Duty Cycle: 1:1
Medium parameters used: f = 5700 MHz; σ = 6.084 S/m; ε_r = 47.228; ρ = 1000 kg/m^3
Phantom section: Flat Section
Measurement Standard: DASY5 (IEEE/IEC/ANSI C63.19-2007)
DASY5 Configuration
Probe: EX3DV4 - SN3745; ConvF(3.6, 3.6, 3.6); Calibrated: 2016/04/20;
Sensor-Surface: 1.4mm (Mechanical Surface Detection)
Electronics: DAE4 Sn1369; Calibrated: 2016/05/13
Phantom: ELI v5.0 (30deg probe tilt); Type: QDOVA002AA; Serial: TP:1203
Measurement SW: DASY52, Version 52.8 (8); SEMCAD X Version 14.6.10 (7331)

Area Scan (71x101x1): Interpolated grid: dx=1.000 mm, dy=1.000 mm
Maximum value of SAR (interpolated) = 2.52 W/kg

Zoom Scan (8x8x7)/Cube 0: Measurement grid: dx=4mm, dy=4mm, dz=1.4mm
Reference Value = 20.44 V/m; Power Drift = -0.13 dB
Peak SAR (extrapolated) = 4.03 W/kg
SAR(1 g) = 0.989 W/kg; SAR(10 g) = 0.326 W/kg
Maximum value of SAR (measured) = 2.41 W/kg

Date: 2016/11/29
Ambient Temp. : 24.0 degree.C. Liquid Temp.; 23.5 degree.C.

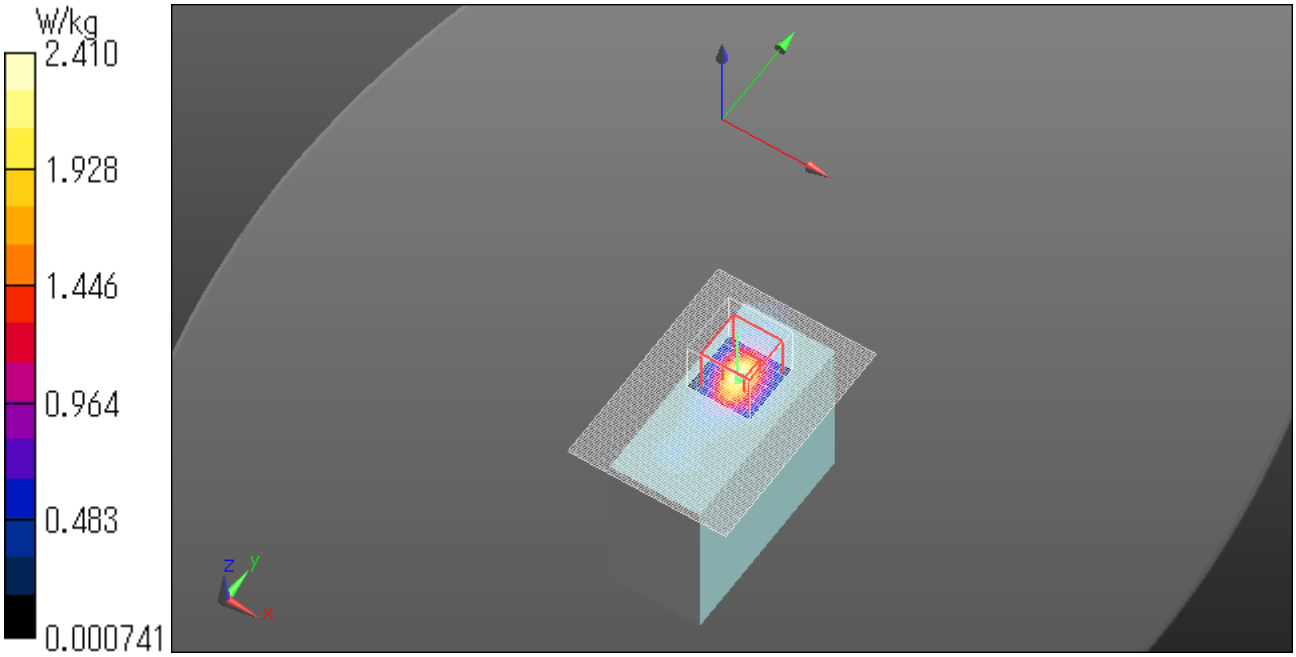

WLAN 5.5G 11a 6Mbps 5720MHz Left tilt 0mm
Communication System: UID 0, WLAN 5GHz (0); Communication System Band: WLAN 5GHz Mid; Frequency: 5720 MHz; Duty Cycle: 1:1
Medium parameters used: f = 5720 MHz; σ = 6.127 S/m; ε_r = 47.373; ρ = 1000 kg/m^3
Phantom section: Flat Section
Measurement Standard: DASY5 (IEEE/IEC/ANSI C63.19-2007)
DASY5 Configuration
Probe: EX3DV4 - SN3745; ConvF(3.6, 3.6, 3.6); Calibrated: 2016/04/20;
Sensor-Surface: 1.4mm (Mechanical Surface Detection)
Electronics: DAE4 Sn1369; Calibrated: 2016/05/13
Phantom: ELI v5.0 (30deg probe tilt); Type: QDOVA002AA; Serial: TP:1203
Measurement SW: DASY52, Version 52.8 (8); SEMCAD X Version 14.6.10 (7331)

Area Scan (71x101x1): Interpolated grid: dx=1.000 mm, dy=1.000 mm
Maximum value of SAR (interpolated) = 2.42 W/kg

Zoom Scan (8x8x7)/Cube 0: Measurement grid: dx=4mm, dy=4mm, dz=1.4mm
Reference Value = 20.38 V/m; Power Drift = -0.21 dB
Peak SAR (extrapolated) = 3.89 W/kg
SAR(1 g) = 0.959 W/kg; SAR(10 g) = 0.313 W/kg
Maximum value of SAR (measured) = 2.25 W/kg

Date: 2016/11/29
Ambient Temp. : 24.0 degree.C. Liquid Temp.; 23.5 degree.C.

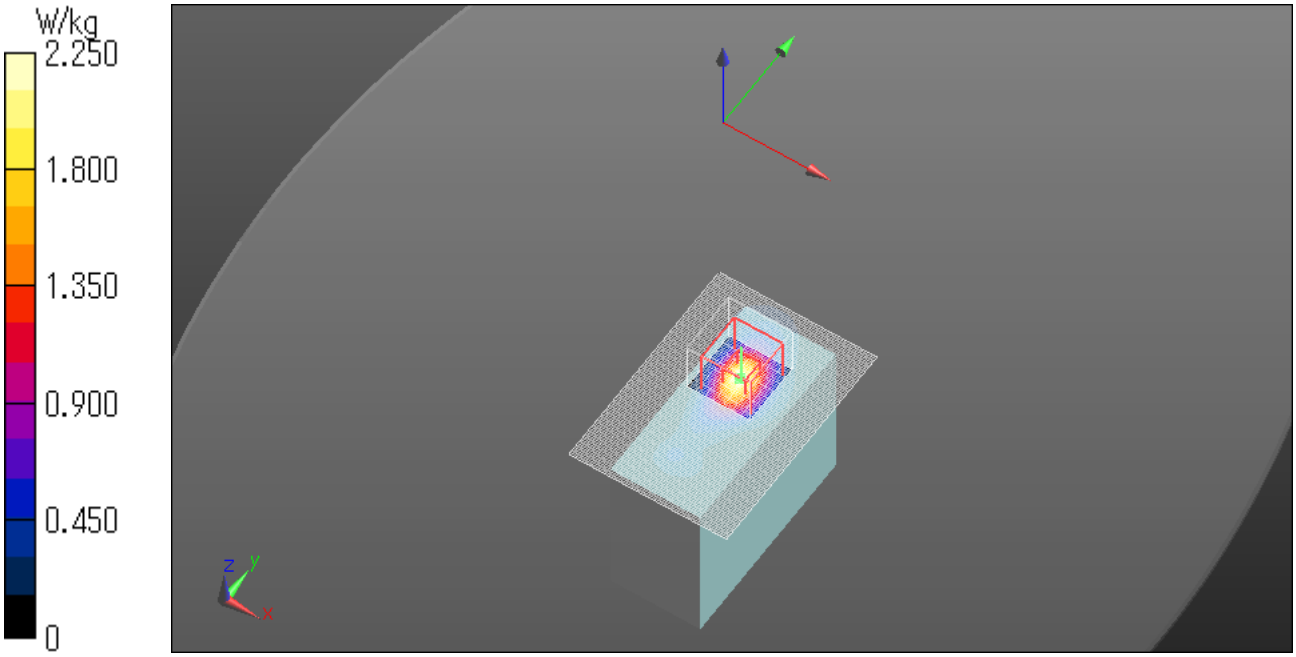

WLAN 5.5G 11a 6Mbps 5720MHz Front 0mm
Communication System: UID 0, WLAN 5GHz (0); Communication System Band: WLAN 5GHz Mid; Frequency: 5720 MHz; Duty Cycle: 1:1
Medium parameters used: f = 5720 MHz; σ = 6.127 S/m; ε_r = 47.373; ρ = 1000 kg/m^3
Phantom section: Flat Section
Measurement Standard: DASY5 (IEEE/IEC/ANSI C63.19-2007)
DASY5 Configuration
Probe: EX3DV4 - SN3745; ConvF(3.6, 3.6, 3.6); Calibrated: 2016/04/20;
Sensor-Surface: 1.4mm (Mechanical Surface Detection)
Electronics: DAE4 Sn1369; Calibrated: 2016/05/13
Phantom: ELI v5.0 (30deg probe tilt); Type: QDOVA002AA; Serial: TP:1203
Measurement SW: DASY52, Version 52.8 (8); SEMCAD X Version 14.6.10 (7331)

Area Scan (71x101x1): Interpolated grid: dx=1.000 mm, dy=1.000 mm
Maximum value of SAR (interpolated) = 0.503 W/kg

Zoom Scan (8x8x7)/Cube 0: Measurement grid: dx=4mm, dy=4mm, dz=1.4mm
Reference Value = 9.402 V/m; Power Drift = -0.06 dB
Peak SAR (extrapolated) = 0.853 W/kg
SAR(1 g) = 0.226 W/kg; SAR(10 g) = 0.094 W/kg
Maximum value of SAR (measured) = 0.490 W/kg

Date: 2016/11/29
Ambient Temp. : 24.0 degree.C. Liquid Temp.; 23.5 degree.C.

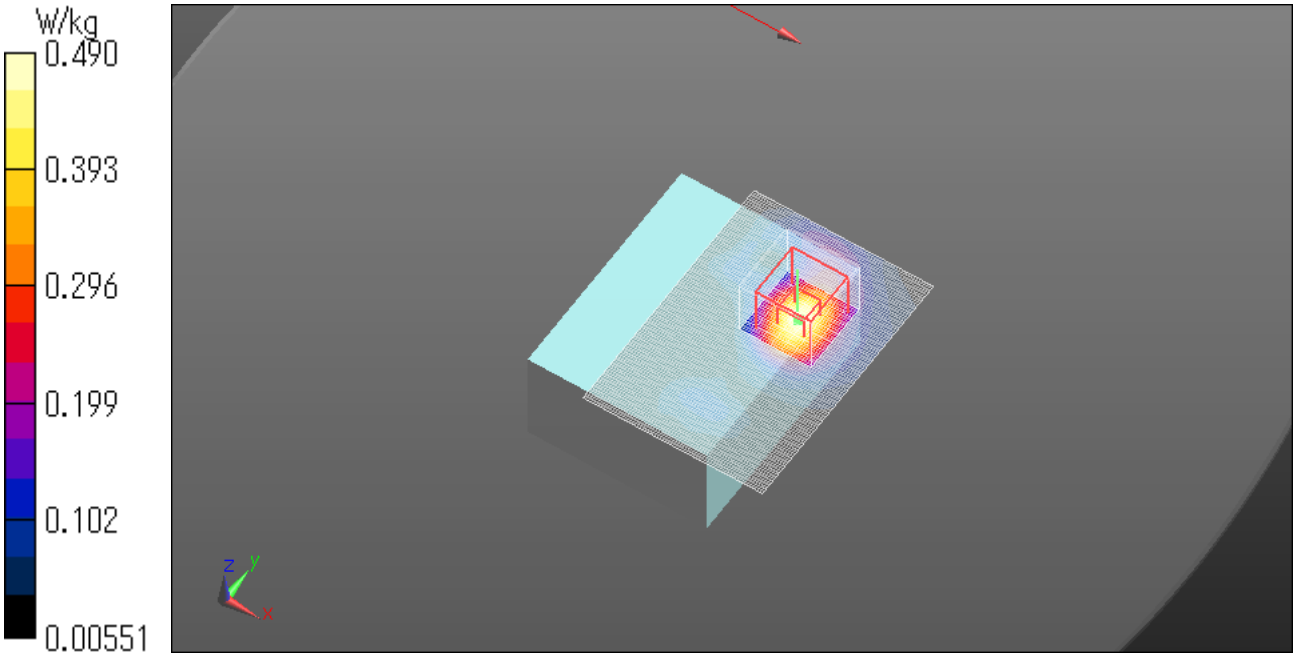

WLAN 5.5G 11a 6Mbps 5700MHz Front tilt 0mm
Communication System: UID 0, WLAN 5GHz (0); Communication System Band: WLAN 5GHz Mid; Frequency: 5700 MHz; Duty Cycle: 1:1
Medium parameters used: f = 5700 MHz; σ = 6.084 S/m; ε_r = 47.228; ρ = 1000 kg/m^3
Phantom section: Flat Section
Measurement Standard: DASY5 (IEEE/IEC/ANSI C63.19-2007)
DASY5 Configuration
Probe: EX3DV4 - SN3745; ConvF(3.6, 3.6, 3.6); Calibrated: 2016/04/20;
Sensor-Surface: 1.4mm (Mechanical Surface Detection)
Electronics: DAE4 Sn1369; Calibrated: 2016/05/13
Phantom: ELI v5.0 (30deg probe tilt); Type: QDOVA002AA; Serial: TP:1203
Measurement SW: DASY52, Version 52.8 (8); SEMCAD X Version 14.6.10 (7331)

Area Scan (71x101x1): Interpolated grid: dx=1.000 mm, dy=1.000 mm
Maximum value of SAR (interpolated) = 1.76 W/kg

Zoom Scan (8x8x7)/Cube 0: Measurement grid: dx=4mm, dy=4mm, dz=1.4mm
Reference Value = 18.26 V/m; Power Drift = -0.17 dB
Peak SAR (extrapolated) = 3.19 W/kg
SAR(1 g) = 0.761 W/kg; SAR(10 g) = 0.239 W/kg
Maximum value of SAR (measured) = 1.83 W/kg

Date: 2016/11/29
Ambient Temp. : 24.0 degree.C. Liquid Temp.; 23.5 degree.C.

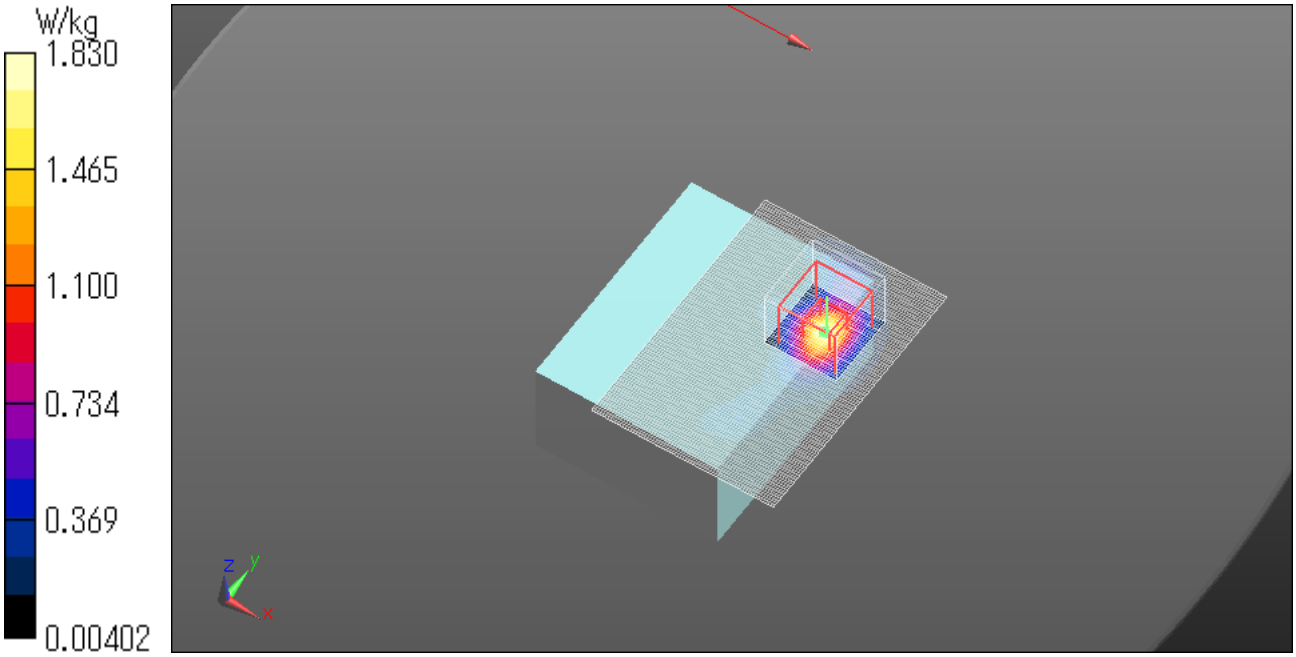

WLAN 5.5G 11a 6Mbps 5720MHz Front tilt 0mm
Communication System: UID 0, WLAN 5GHz (0); Communication System Band: WLAN 5GHz Mid; Frequency: 5720 MHz; Duty Cycle: 1:1
Medium parameters used: f = 5720 MHz; σ = 6.127 S/m; ε_r = 47.373; ρ = 1000 kg/m^3
Phantom section: Flat Section
Measurement Standard: DASY5 (IEEE/IEC/ANSI C63.19-2007)
DASY5 Configuration
Probe: EX3DV4 - SN3745; ConvF(3.6, 3.6, 3.6); Calibrated: 2016/04/20;
Sensor-Surface: 1.4mm (Mechanical Surface Detection)
Electronics: DAE4 Sn1369; Calibrated: 2016/05/13
Phantom: ELI v5.0 (30deg probe tilt); Type: QDOVA002AA; Serial: TP:1203
Measurement SW: DASY52, Version 52.8 (8); SEMCAD X Version 14.6.10 (7331)

Area Scan (71x101x1): Interpolated grid: dx=1.000 mm, dy=1.000 mm
Maximum value of SAR (interpolated) = 1.75 W/kg

Zoom Scan (8x8x7)/Cube 0: Measurement grid: dx=4mm, dy=4mm, dz=1.4mm
Reference Value = 18.17 V/m; Power Drift = -0.16 dB
Peak SAR (extrapolated) = 3.20 W/kg
SAR(1 g) = 0.761 W/kg; SAR(10 g) = 0.239 W/kg
Maximum value of SAR (measured) = 1.78 W/kg

Date: 2016/11/29
Ambient Temp. : 24.0 degree.C. Liquid Temp.; 23.5 degree.C.

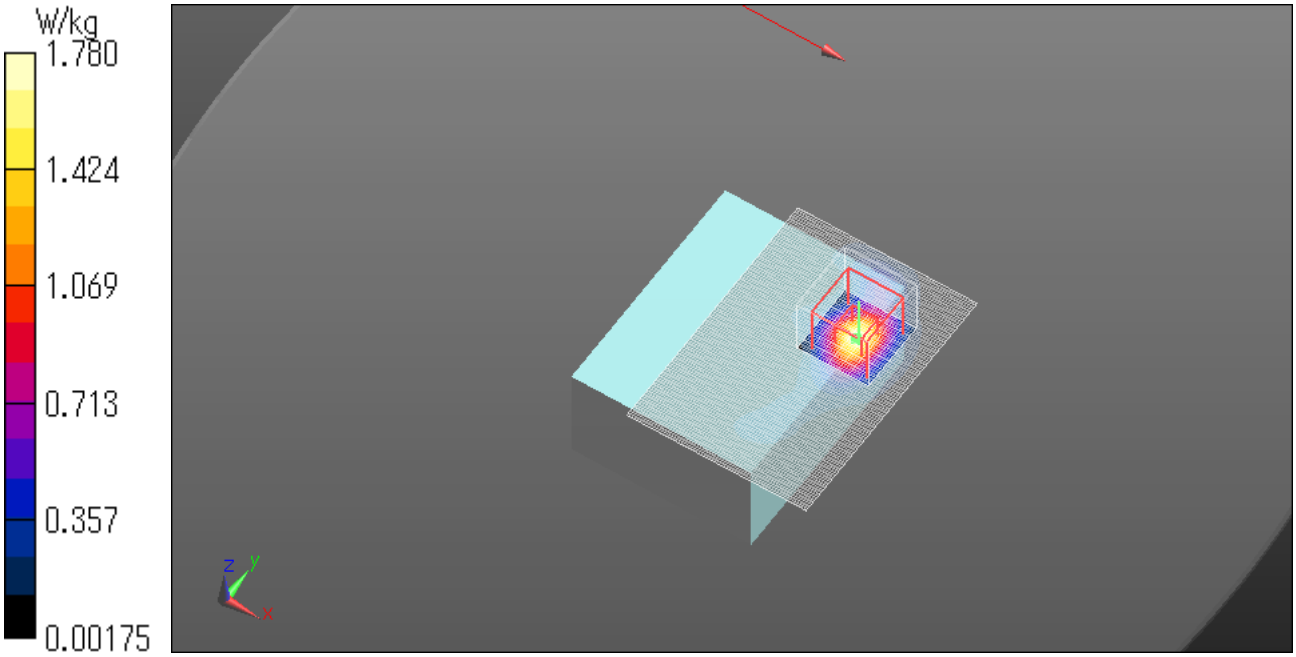

WLAN 5.5G 11a 6Mbps 5720MHz Rear 0mm
Communication System: UID 0, WLAN 5GHz (0); Communication System Band: WLAN 5GHz Mid; Frequency: 5720 MHz; Duty Cycle: 1:1
Medium parameters used: f = 5720 MHz; σ = 6.127 S/m; ε_r = 47.373; ρ = 1000 kg/m^3
Phantom section: Flat Section
Measurement Standard: DASY5 (IEEE/IEC/ANSI C63.19-2007)
DASY5 Configuration
Probe: EX3DV4 - SN3745; ConvF(3.6, 3.6, 3.6); Calibrated: 2016/04/20;
Sensor-Surface: 1.4mm (Mechanical Surface Detection)
Electronics: DAE4 Sn1369; Calibrated: 2016/05/13
Phantom: ELI v5.0 (30deg probe tilt); Type: QDOVA002AA; Serial: TP:1203
Measurement SW: DASY52, Version 52.8 (8); SEMCAD X Version 14.6.10 (7331)

Area Scan (71x101x1): Interpolated grid: dx=1.000 mm, dy=1.000 mm
Maximum value of SAR (interpolated) = 0.170 W/kg

Zoom Scan (8x8x7)/Cube 0: Measurement grid: dx=4mm, dy=4mm, dz=1.4mm
Reference Value = 4.983 V/m; Power Drift = 0.02 dB
Peak SAR (extrapolated) = 0.248 W/kg
SAR(1 g) = 0.073 W/kg; SAR(10 g) = 0.028 W/kg
Maximum value of SAR (measured) = 0.159 W/kg

Date: 2016/11/29
Ambient Temp. : 24.0 degree.C. Liquid Temp.; 23.5 degree.C.

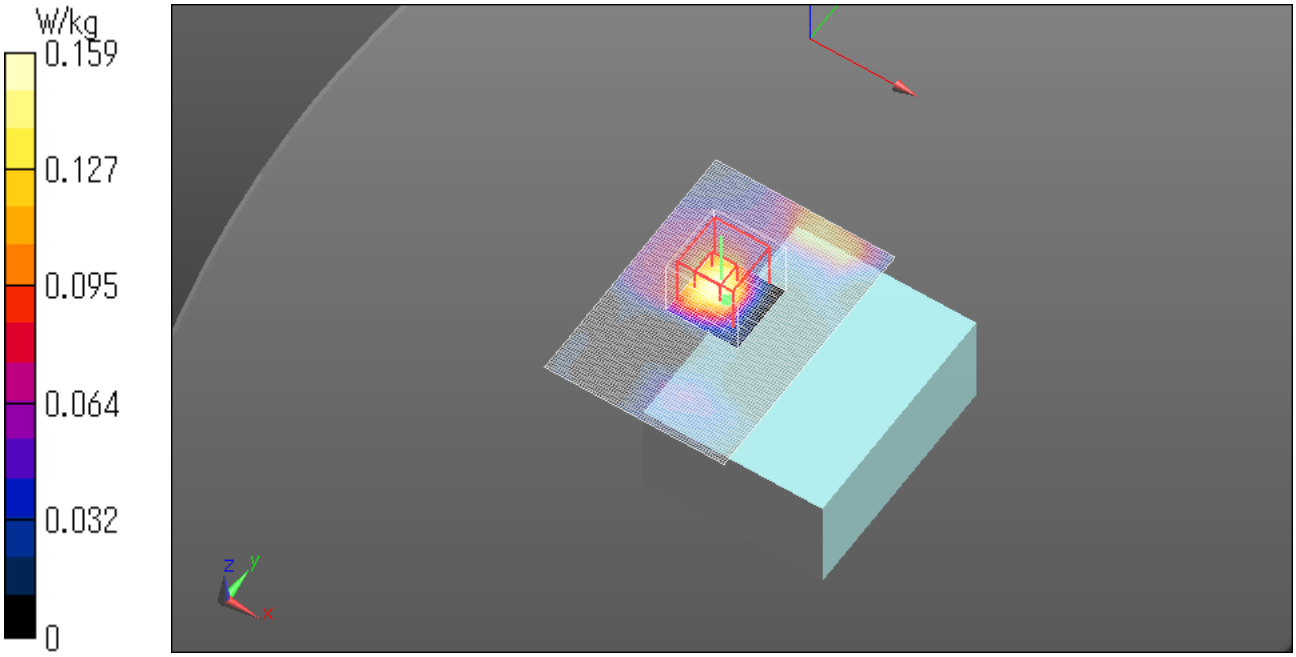

WLAN 5.5G 11a 6Mbps 5700MHz Diagonal side 0mm
Communication System: UID 0, WLAN 5GHz (0); Communication System Band: WLAN 5GHz Mid; Frequency: 5700 MHz; Duty Cycle: 1:1
Medium parameters used: f = 5700 MHz; σ = 6.084 S/m; ε_r = 47.228; ρ = 1000 kg/m^3
Phantom section: Flat Section
Measurement Standard: DASY5 (IEEE/IEC/ANSI C63.19-2007)
DASY5 Configuration
Probe: EX3DV4 - SN3745; ConvF(3.6, 3.6, 3.6); Calibrated: 2016/04/20;
Sensor-Surface: 1.4mm (Mechanical Surface Detection)
Electronics: DAE4 Sn1369; Calibrated: 2016/05/13
Phantom: ELI v5.0 (30deg probe tilt); Type: QDOVA002AA; Serial: TP:1203
Measurement SW: DASY52, Version 52.8 (8); SEMCAD X Version 14.6.10 (7331)

Area Scan (71x101x1): Interpolated grid: dx=1.000 mm, dy=1.000 mm
Maximum value of SAR (interpolated) = 2.05 W/kg

Zoom Scan (8x8x7)/Cube 0: Measurement grid: dx=4mm, dy=4mm, dz=1.4mm
Reference Value = 19.81 V/m; Power Drift = -0.10 dB
Peak SAR (extrapolated) = 3.72 W/kg
SAR(1 g) = 0.894 W/kg; SAR(10 g) = 0.282 W/kg
Maximum value of SAR (measured) = 2.15 W/kg

Date: 2016/11/29
Ambient Temp. : 24.0 degree.C. Liquid Temp.; 23.5 degree.C.

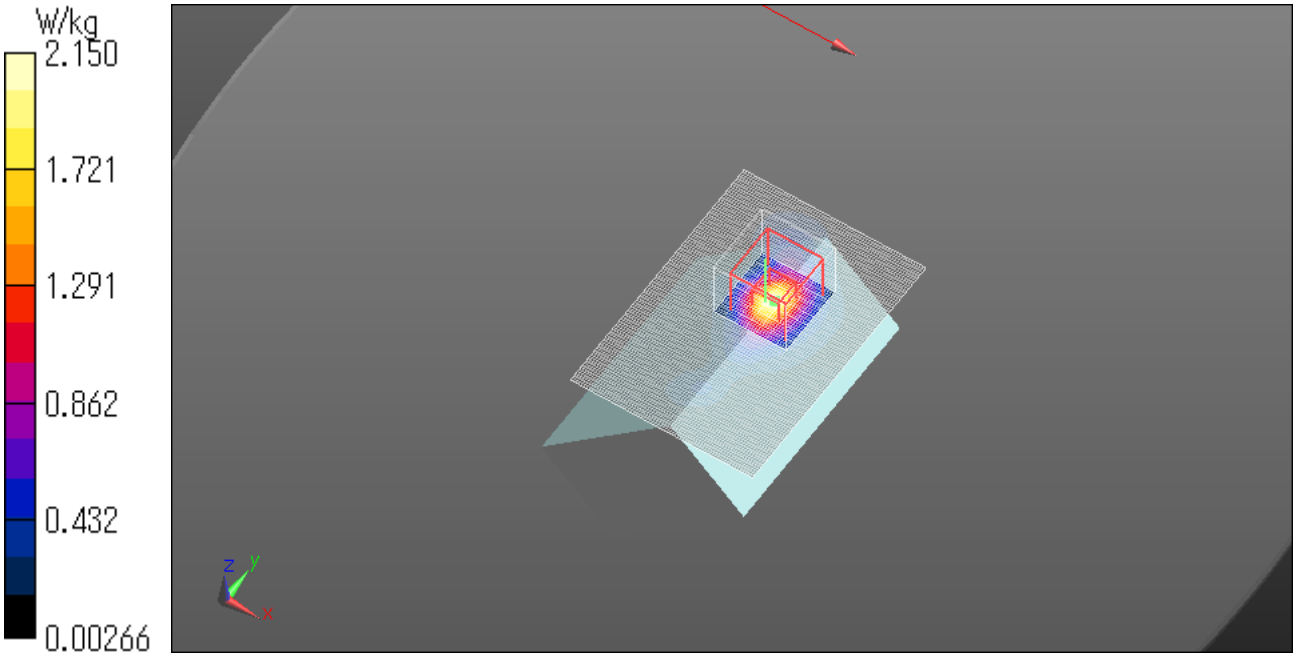

WLAN 5.5G 11a 6Mbps 5720MHz Diagonal side 0mm
Communication System: UID 0, WLAN 5GHz (0); Communication System Band: WLAN 5GHz Mid; Frequency: 5720 MHz; Duty Cycle: 1:1
Medium parameters used: f = 5720 MHz; σ = 6.127 S/m; ε_r = 47.373; ρ = 1000 kg/m^3
Phantom section: Flat Section
Measurement Standard: DASY5 (IEEE/IEC/ANSI C63.19-2007)
DASY5 Configuration
Probe: EX3DV4 - SN3745; ConvF(3.6, 3.6, 3.6); Calibrated: 2016/04/20;
Sensor-Surface: 1.4mm (Mechanical Surface Detection)
Electronics: DAE4 Sn1369; Calibrated: 2016/05/13
Phantom: ELI v5.0 (30deg probe tilt); Type: QDOVA002AA; Serial: TP:1203
Measurement SW: DASY52, Version 52.8 (8); SEMCAD X Version 14.6.10 (7331)

Area Scan (71x101x1): Interpolated grid: dx=1.000 mm, dy=1.000 mm
Maximum value of SAR (interpolated) = 2.05 W/kg

Zoom Scan (8x8x7)/Cube 0: Measurement grid: dx=4mm, dy=4mm, dz=1.4mm
Reference Value = 19.67 V/m; Power Drift = -0.09 dB
Peak SAR (extrapolated) = 3.72 W/kg
SAR(1 g) = 0.876 W/kg; SAR(10 g) = 0.275 W/kg
Maximum value of SAR (measured) = 2.12 W/kg

Date: 2016/11/29
Ambient Temp. : 24.0 degree.C. Liquid Temp.; 23.5 degree.C.

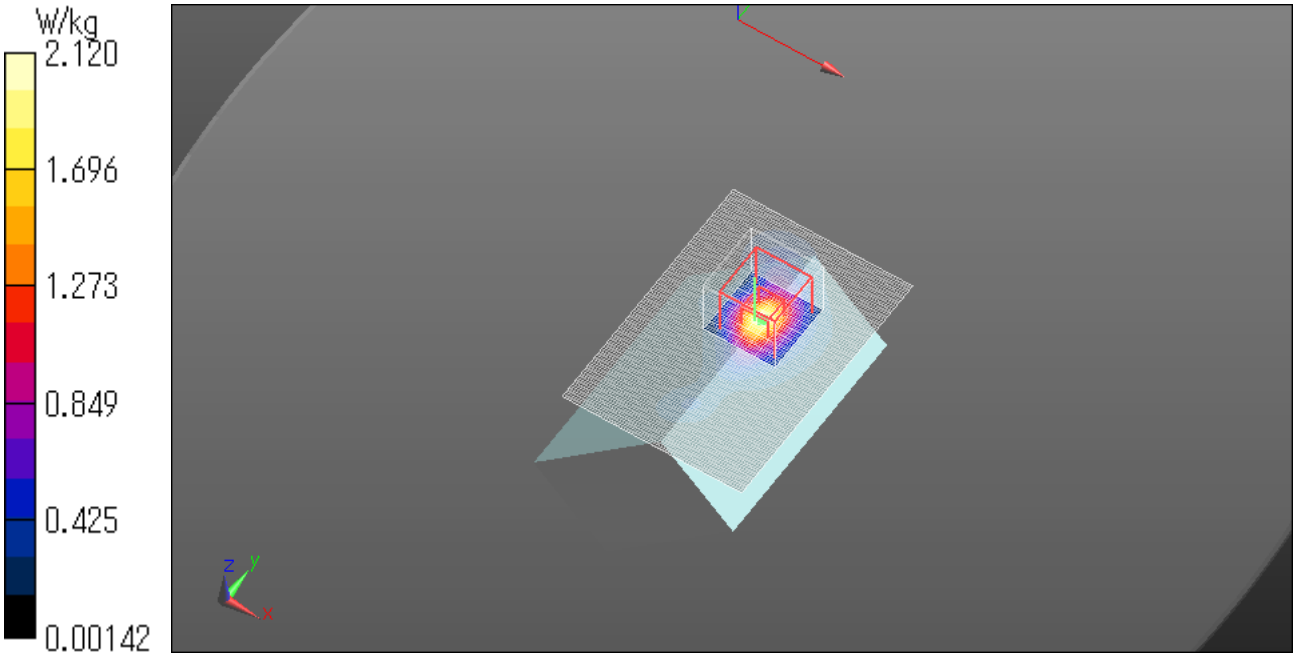

5.8GHz Measurement data

WLAN 5.8G 11a 6Mbps 5745MHz Top 0mm
Communication System: UID 0, WLAN 5GHz (0); Communication System Band: WLAN 5GHz High; Frequency: 5745 MHz; Duty Cycle: 1:1
Medium parameters used (interpolated): f = 5745 MHz; σ = 6.031 S/m; ε_r = 46.444; ρ = 1000 kg/m^3
Phantom section: Flat Section
Measurement Standard: DASY5 (IEEE/IEC/ANSI C63.19-2007)
DASY5 Configuration
Probe: EX3DV4 - SN3745; ConvF(3.6, 3.6, 3.6); Calibrated: 2016/04/20;
Sensor-Surface: 1.4mm (Mechanical Surface Detection)
Electronics: DAE4 Sn1369; Calibrated: 2016/05/13
Phantom: ELI v5.0 (30deg probe tilt); Type: QDOVA002AA; Serial: TP:1203
Measurement SW: DASY52, Version 52.8 (8); SEMCAD X Version 14.6.10 (7331)

Area Scan 2 (71x101x1): Interpolated grid: dx=1.000 mm, dy=1.000 mm
Maximum value of SAR (interpolated) = 0.532 W/kg

Zoom Scan (8x8x7)/Cube 0: Measurement grid: dx=4mm, dy=4mm, dz=1.4mm
Reference Value = 9.635 V/m; Power Drift = -0.13 dB
Peak SAR (extrapolated) = 0.851 W/kg
SAR(1 g) = 0.229 W/kg; SAR(10 g) = 0.086 W/kg
Maximum value of SAR (measured) = 0.528 W/kg

Date: 2016/12/01
Ambient Temp. : 24.0 degree.C. Liquid Temp.; 23.5 degree.C.

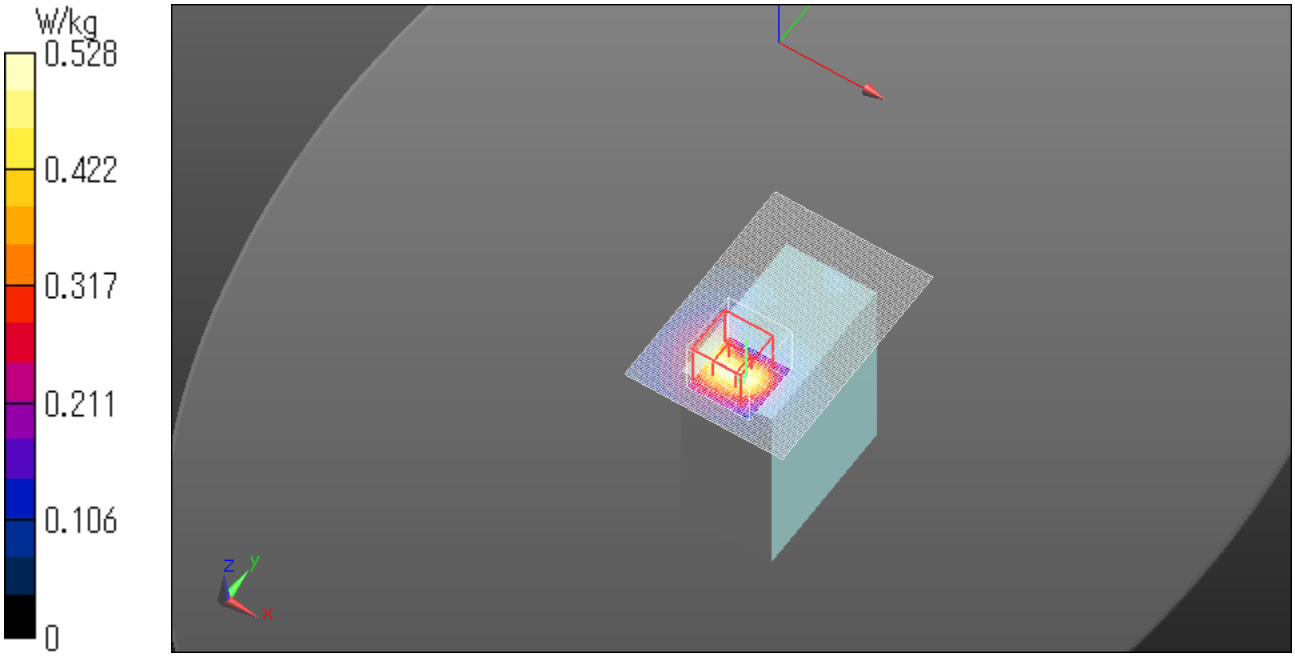

WLAN 5.8G 11a 6Mbps 5745MHz Left 0mm
Communication System: UID 0, WLAN 5GHz (0); Communication System Band: WLAN 5GHz High; Frequency: 5745 MHz; Duty Cycle: 1:1
Medium parameters used (interpolated): f = 5745 MHz; σ = 6.031 S/m; ε_r = 46.444; ρ = 1000 kg/m^3
Phantom section: Flat Section
Measurement Standard: DASY5 (IEEE/IEC/ANSI C63.19-2007)
DASY5 Configuration
Probe: EX3DV4 - SN3745; ConvF(3.6, 3.6, 3.6); Calibrated: 2016/04/20;
Sensor-Surface: 1.4mm (Mechanical Surface Detection)
Electronics: DAE4 Sn1369; Calibrated: 2016/05/13
Phantom: ELI v5.0 (30deg probe tilt); Type: QDOVA002AA; Serial: TP:1203
Measurement SW: DASY52, Version 52.8 (8); SEMCAD X Version 14.6.10 (7331)

Area Scan (71x101x1): Interpolated grid: dx=1.000 mm, dy=1.000 mm
Maximum value of SAR (interpolated) = 2.00 W/kg

Zoom Scan (8x8x7)/Cube 0: Measurement grid: dx=4mm, dy=4mm, dz=1.4mm
Reference Value = 17.81 V/m; Power Drift = -0.16 dB
Peak SAR (extrapolated) = 3.05 W/kg
SAR(1 g) = 0.790 W/kg; SAR(10 g) = 0.272 W/kg
Maximum value of SAR (measured) = 1.89 W/kg

Date: 2016/12/01
Ambient Temp. : 24.0 degree.C. Liquid Temp.; 23.5 degree.C.

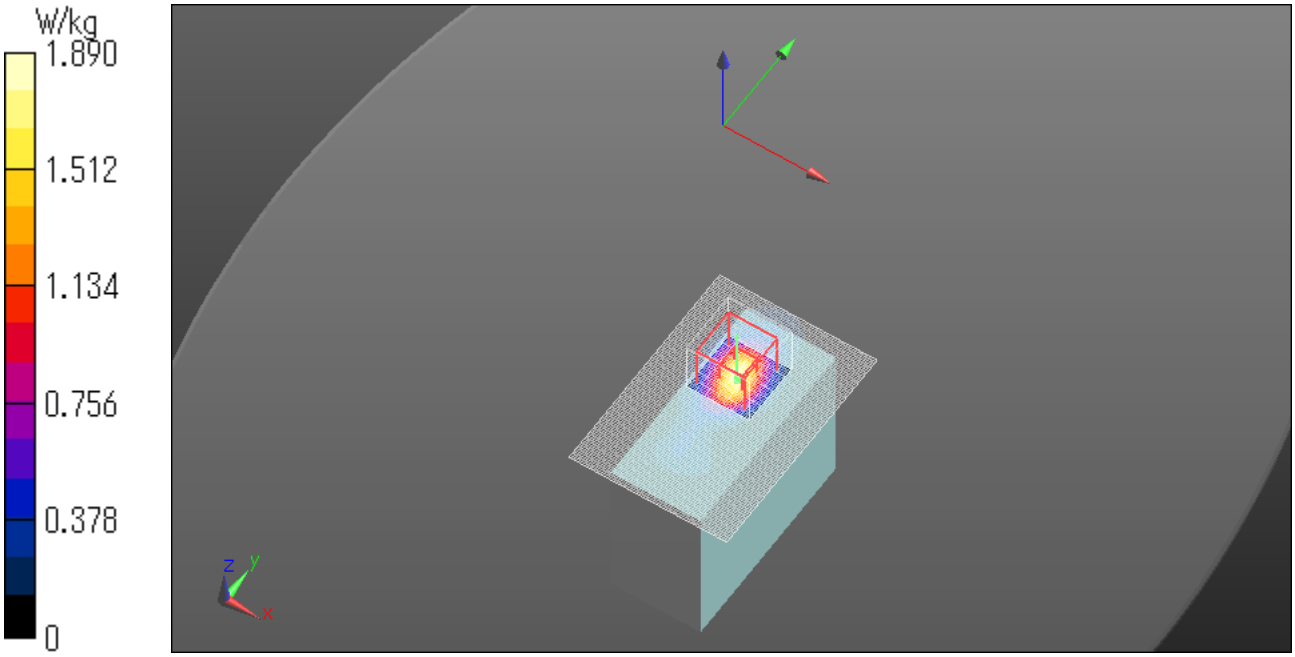

WLAN 5.8G 11a 6Mbps 5785MHz Left 0mm
Communication System: UID 0, WLAN 5GHz (0); Communication System Band: WLAN 5GHz High; Frequency: 5785 MHz; Duty Cycle: 1:1
Medium parameters used (interpolated): f = 5785 MHz; σ = 6.036 S/m; ε_r = 46.493; ρ = 1000 kg/m^3
Phantom section: Flat Section
Measurement Standard: DASY5 (IEEE/IEC/ANSI C63.19-2007)
DASY5 Configuration
Probe: EX3DV4 - SN3745; ConvF(3.6, 3.6, 3.6); Calibrated: 2016/04/20;
Sensor-Surface: 1.4mm (Mechanical Surface Detection)
Electronics: DAE4 Sn1369; Calibrated: 2016/05/13
Phantom: ELI v5.0 (30deg probe tilt); Type: QDOVA002AA; Serial: TP:1203
Measurement SW: DASY52, Version 52.8 (8); SEMCAD X Version 14.6.10 (7331)

Area Scan (71x101x1): Interpolated grid: dx=1.000 mm, dy=1.000 mm
Maximum value of SAR (interpolated) = 1.94 W/kg

Zoom Scan (8x8x7)/Cube 0: Measurement grid: dx=4mm, dy=4mm, dz=1.4mm
Reference Value = 17.70 V/m; Power Drift = -0.16 dB
Peak SAR (extrapolated) = 2.92 W/kg
SAR(1 g) = 0.762 W/kg; SAR(10 g) = 0.261 W/kg
Maximum value of SAR (measured) = 1.79 W/kg

Date: 2016/12/01
Ambient Temp. : 24.0 degree.C. Liquid Temp.; 23.5 degree.C.

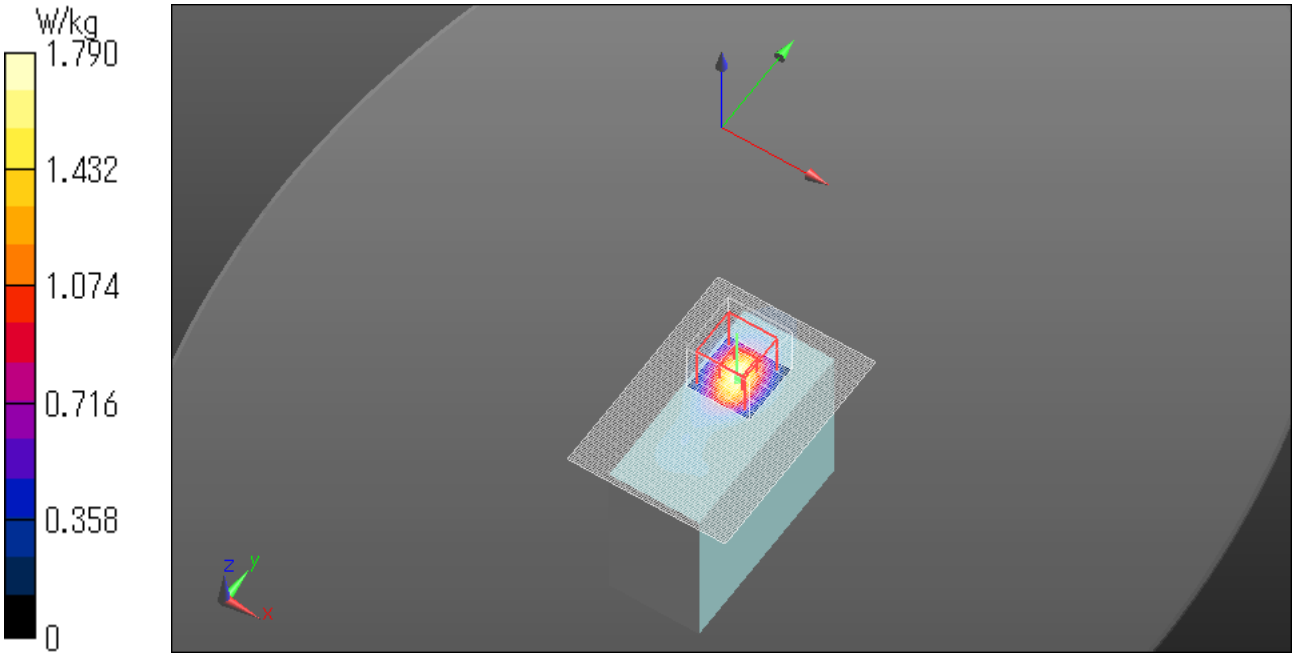

WLAN 5.8G 11a 6Mbps 5745MHz Left tilt 0mm
Communication System: UID 0, WLAN 5GHz (0); Communication System Band: WLAN 5GHz High; Frequency: 5745 MHz; Duty Cycle: 1:1
Medium parameters used (interpolated): f = 5745 MHz; σ = 6.031 S/m; ε_r = 46.444; ρ = 1000 kg/m^3
Phantom section: Flat Section
Measurement Standard: DASY5 (IEEE/IEC/ANSI C63.19-2007)
DASY5 Configuration
Probe: EX3DV4 - SN3745; ConvF(3.6, 3.6, 3.6); Calibrated: 2016/04/20;
Sensor-Surface: 1.4mm (Mechanical Surface Detection)
Electronics: DAE4 Sn1369; Calibrated: 2016/05/13
Phantom: ELI v5.0 (30deg probe tilt); Type: QDOVA002AA; Serial: TP:1203
Measurement SW: DASY52, Version 52.8 (8); SEMCAD X Version 14.6.10 (7331)

Area Scan (71x101x1): Interpolated grid: dx=1.000 mm, dy=1.000 mm
Maximum value of SAR (interpolated) = 2.33 W/kg

Zoom Scan (8x8x7)/Cube 0: Measurement grid: dx=4mm, dy=4mm, dz=1.4mm
Reference Value = 19.95 V/m; Power Drift = -0.03 dB
Peak SAR (extrapolated) = 3.83 W/kg
SAR(1 g) = 0.943 W/kg; SAR(10 g) = 0.303 W/kg
Maximum value of SAR (measured) = 2.27 W/kg

Date: 2016/12/01
Ambient Temp. : 24.0 degree.C. Liquid Temp.; 23.5 degree.C.

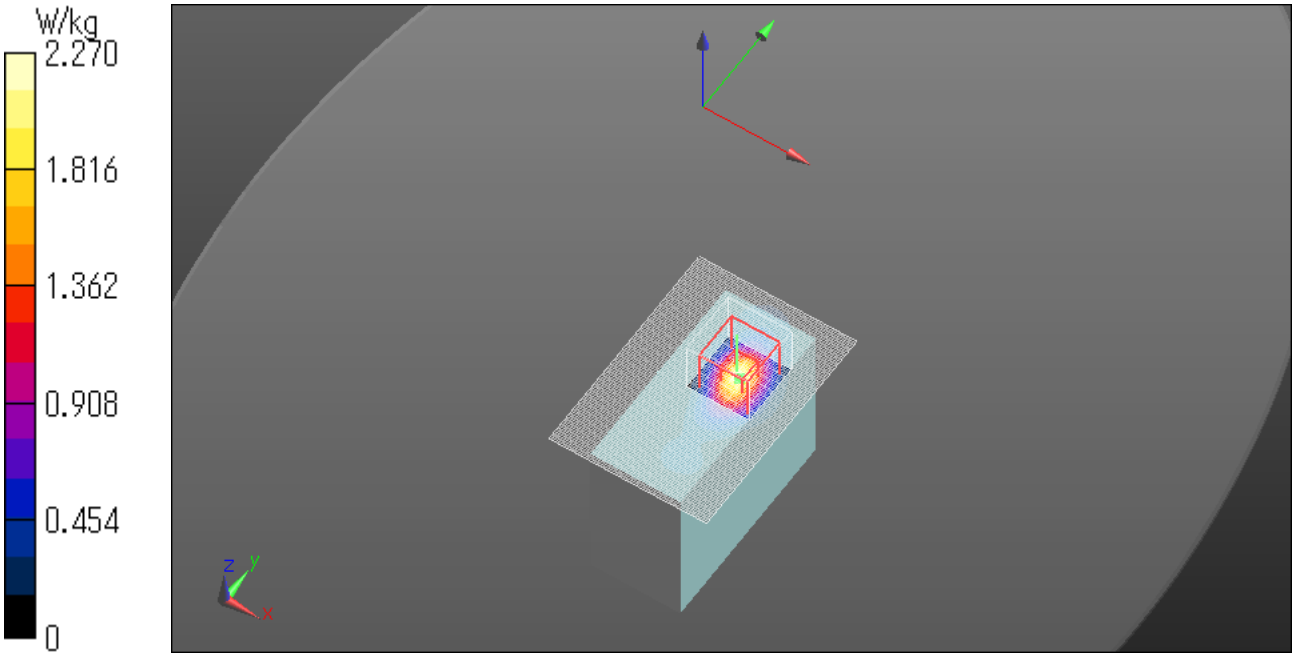

WLAN 5.8G 11a 6Mbps 5785MHz Left tilt 0mm
Communication System: UID 0, WLAN 5GHz (0); Communication System Band: WLAN 5GHz High; Frequency: 5785 MHz; Duty Cycle: 1:1
Medium parameters used (interpolated): f = 5785 MHz; σ = 6.036 S/m; ε_r = 46.493; ρ = 1000 kg/m^3
Phantom section: Flat Section
Measurement Standard: DASY5 (IEEE/IEC/ANSI C63.19-2007)
DASY5 Configuration
Probe: EX3DV4 - SN3745; ConvF(3.6, 3.6, 3.6); Calibrated: 2016/04/20;
Sensor-Surface: 1.4mm (Mechanical Surface Detection)
Electronics: DAE4 Sn1369; Calibrated: 2016/05/13
Phantom: ELI v5.0 (30deg probe tilt); Type: QDOVA002AA; Serial: TP:1203
Measurement SW: DASY52, Version 52.8 (8); SEMCAD X Version 14.6.10 (7331)

Area Scan (71x101x1): Interpolated grid: dx=1.000 mm, dy=1.000 mm
Maximum value of SAR (interpolated) = 2.37 W/kg

Zoom Scan (8x8x7)/Cube 0: Measurement grid: dx=4mm, dy=4mm, dz=1.4mm
Reference Value = 20.19 V/m; Power Drift = -0.10 dB
Peak SAR (extrapolated) = 3.85 W/kg
SAR(1 g) = 0.947 W/kg; SAR(10 g) = 0.304 W/kg
Maximum value of SAR (measured) = 2.28 W/kg

Date: 2016/12/01
Ambient Temp. : 24.0 degree.C. Liquid Temp.; 23.5 degree.C.

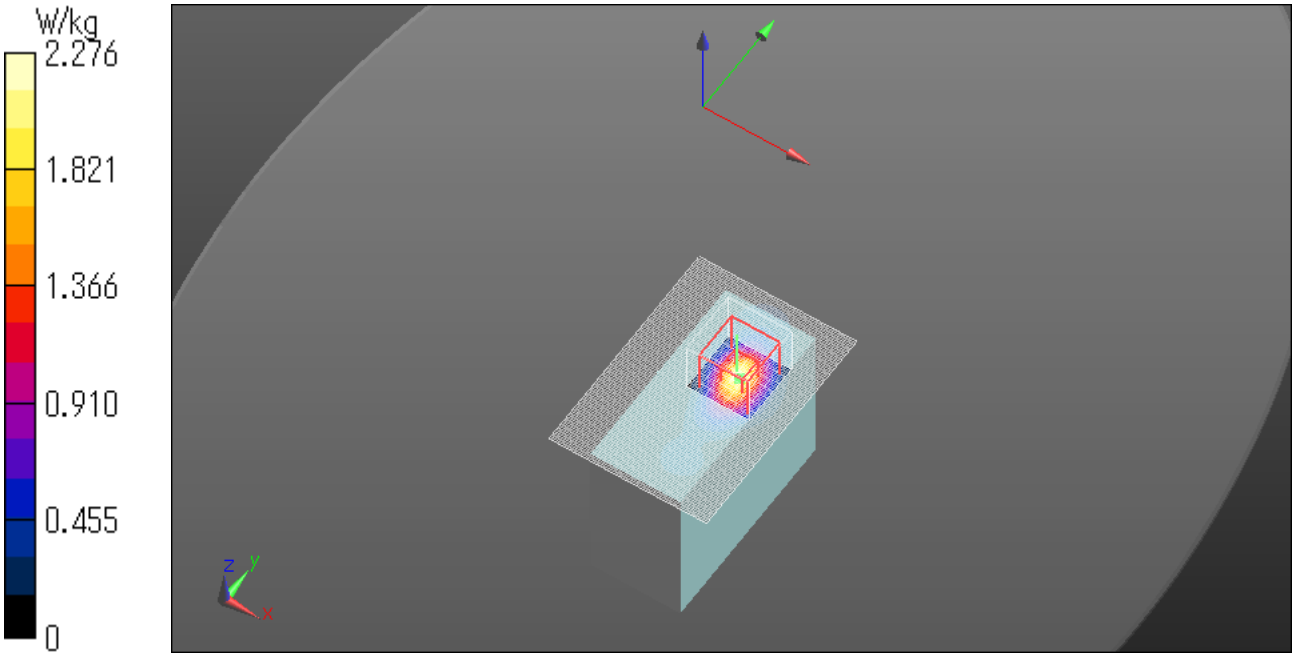

WLAN 5.8G 11a 6Mbps 5745MHz Front 0mm
Communication System: UID 0, WLAN 5GHz (0); Communication System Band: WLAN 5GHz High; Frequency: 5745 MHz; Duty Cycle: 1:1
Medium parameters used (interpolated): f = 5745 MHz; σ = 6.031 S/m; ε_r = 46.444; ρ = 1000 kg/m^3
Phantom section: Flat Section
Measurement Standard: DASY5 (IEEE/IEC/ANSI C63.19-2007)
DASY5 Configuration
Probe: EX3DV4 - SN3745; ConvF(3.6, 3.6, 3.6); Calibrated: 2016/04/20;
Sensor-Surface: 1.4mm (Mechanical Surface Detection)
Electronics: DAE4 Sn1369; Calibrated: 2016/05/13
Phantom: ELI v5.0 (30deg probe tilt); Type: QDOVA002AA; Serial: TP:1203
Measurement SW: DASY52, Version 52.8 (8); SEMCAD X Version 14.6.10 (7331)

Area Scan (71x101x1): Interpolated grid: dx=1.000 mm, dy=1.000 mm
Maximum value of SAR (interpolated) = 0.482 W/kg

Zoom Scan (8x8x7)/Cube 0: Measurement grid: dx=4mm, dy=4mm, dz=1.4mm
Reference Value = 9.210 V/m; Power Drift = -0.11 dB
Peak SAR (extrapolated) = 0.801 W/kg
SAR(1 g) = 0.203 W/kg; SAR(10 g) = 0.074 W/kg
Maximum value of SAR (measured) = 0.464 W/kg

Date: 2016/12/01
Ambient Temp. : 24.0 degree.C. Liquid Temp.; 23.5 degree.C.

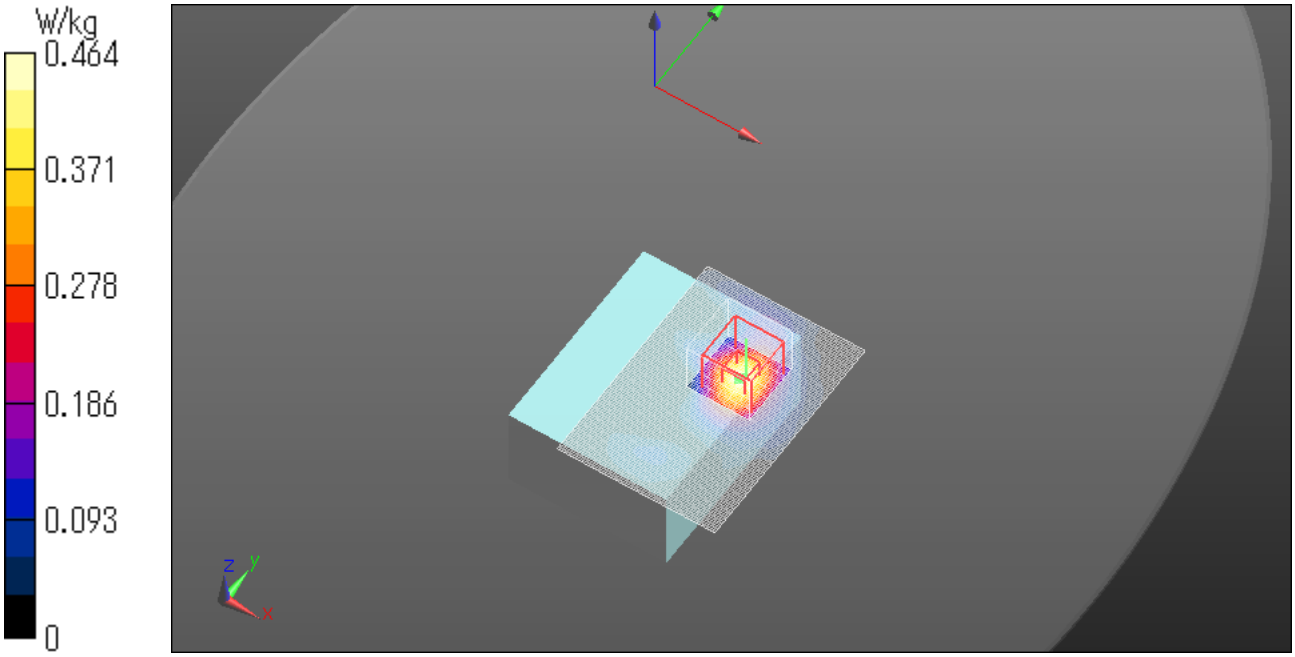

WLAN 5.8G 11a 6Mbps 5745MHz Front tilt 0mm
Communication System: UID 0, WLAN 11a/b/g/n (0); Communication System Band: 11a/n (W58); Frequency: 5745 MHz; Duty Cycle: 1:1
Medium parameters used (interpolated): f = 5745 MHz; σ = 6.031 S/m; ε_r = 46.444; ρ = 1000 kg/m^3
Phantom section: Flat Section
Measurement Standard: DASY5 (IEEE/IEC/ANSI C63.19-2007)
DASY5 Configuration
Probe: EX3DV4 - SN3745; ConvF(3.6, 3.6, 3.6); Calibrated: 2016/04/20;
Sensor-Surface: 1.4mm (Mechanical Surface Detection)
Electronics: DAE4 Sn1369; Calibrated: 2016/05/13
Phantom: ELI v5.0 (30deg probe tilt); Type: QDOVA002AA; Serial: TP:1203
Measurement SW: DASY52, Version 52.8 (8); SEMCAD X Version 14.6.10 (7331)

Area Scan (71x101x1): Interpolated grid: dx=1.000 mm, dy=1.000 mm
Maximum value of SAR (interpolated) = 1.58 W/kg

Zoom Scan (8x8x7)/Cube 0: Measurement grid: dx=4mm, dy=4mm, dz=1.4mm
Reference Value = 17.25 V/m; Power Drift = -0.04 dB
Peak SAR (extrapolated) = 2.75 W/kg
SAR(1 g) = 0.675 W/kg; SAR(10 g) = 0.208 W/kg
Maximum value of SAR (measured) = 1.62 W/kg

Date: 2016/12/01
Ambient Temp. : 24.0 degree.C. Liquid Temp.; 23.5 degree.C.

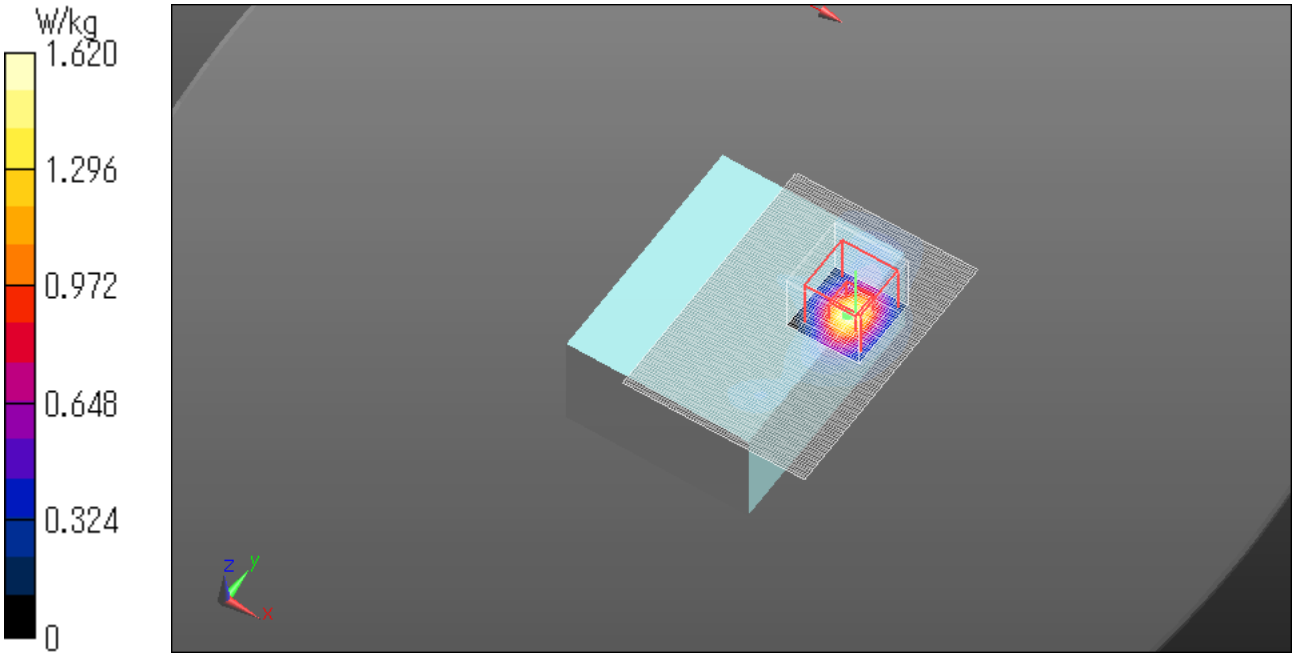

WLAN 5.8G 11a 6Mbps 5745MHz Rear 0mm
Communication System: UID 0, WLAN 5GHz (0); Communication System Band: WLAN 5GHz High; Frequency: 5745 MHz; Duty Cycle: 1:1
Medium parameters used (interpolated): f = 5745 MHz; σ = 6.031 S/m; ε_r = 46.444; ρ = 1000 kg/m^3
Phantom section: Flat Section
Measurement Standard: DASY5 (IEEE/IEC/ANSI C63.19-2007)
DASY5 Configuration
Probe: EX3DV4 - SN3745; ConvF(3.6, 3.6, 3.6); Calibrated: 2016/04/20;
Sensor-Surface: 1.4mm (Mechanical Surface Detection)
Electronics: DAE4 Sn1369; Calibrated: 2016/05/13
Phantom: ELI v5.0 (30deg probe tilt); Type: QDOVA002AA; Serial: TP:1203
Measurement SW: DASY52, Version 52.8 (8); SEMCAD X Version 14.6.10 (7331)

Area Scan (71x101x1): Interpolated grid: dx=1.000 mm, dy=1.000 mm
Maximum value of SAR (interpolated) = 0.220 W/kg

Zoom Scan (8x8x7)/Cube 0: Measurement grid: dx=4mm, dy=4mm, dz=1.4mm
Reference Value = 5.178 V/m; Power Drift = -0.15 dB
Peak SAR (extrapolated) = 0.240 W/kg
SAR(1 g) = 0.092 W/kg; SAR(10 g) = 0.038 W/kg
Maximum value of SAR (measured) = 0.156 W/kg

Date: 2016/12/01
Ambient Temp. : 24.0 degree.C. Liquid Temp.; 23.5 degree.C.

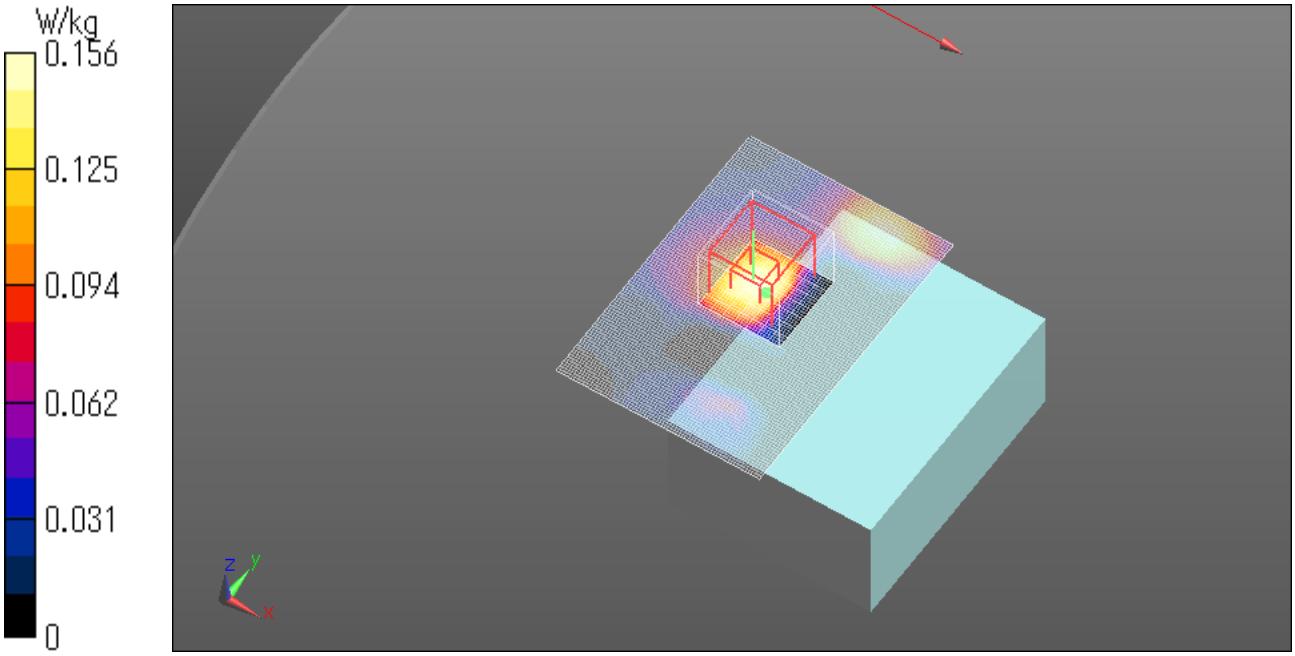

WLAN 5.8G 11a 6Mbps 5745MHz Diagonal side 0mm
Communication System: UID 0, WLAN 5GHz (0); Communication System Band: WLAN 5GHz High; Frequency: 5745 MHz; Duty Cycle: 1:1
Medium parameters used (interpolated): f = 5745 MHz; σ = 6.031 S/m; ε_r = 46.444; ρ = 1000 kg/m^3
Phantom section: Flat Section
Measurement Standard: DASY5 (IEEE/IEC/ANSI C63.19-2007)
DASY5 Configuration
Probe: EX3DV4 - SN3745; ConvF(3.6, 3.6, 3.6); Calibrated: 2016/04/20;
Sensor-Surface: 1.4mm (Mechanical Surface Detection)
Electronics: DAE4 Sn1369; Calibrated: 2016/05/13
Phantom: ELI v5.0 (30deg probe tilt); Type: QDOVA002AA; Serial: TP:1203
Measurement SW: DASY52, Version 52.8 (8); SEMCAD X Version 14.6.10 (7331)

Area Scan (71x101x1): Interpolated grid: dx=1.000 mm, dy=1.000 mm
Maximum value of SAR (interpolated) = 2.14 W/kg

Zoom Scan (8x8x7)/Cube 0: Measurement grid: dx=4mm, dy=4mm, dz=1.4mm
Reference Value = 20.13 V/m; Power Drift = -0.14 dB
Peak SAR (extrapolated) = 3.78 W/kg
SAR(1 g) = 0.898 W/kg; SAR(10 g) = 0.284 W/kg
Maximum value of SAR (measured) = 2.11 W/kg

Date: 2016/12/01
Ambient Temp. : 24.0 degree.C. Liquid Temp.; 23.5 degree.C.

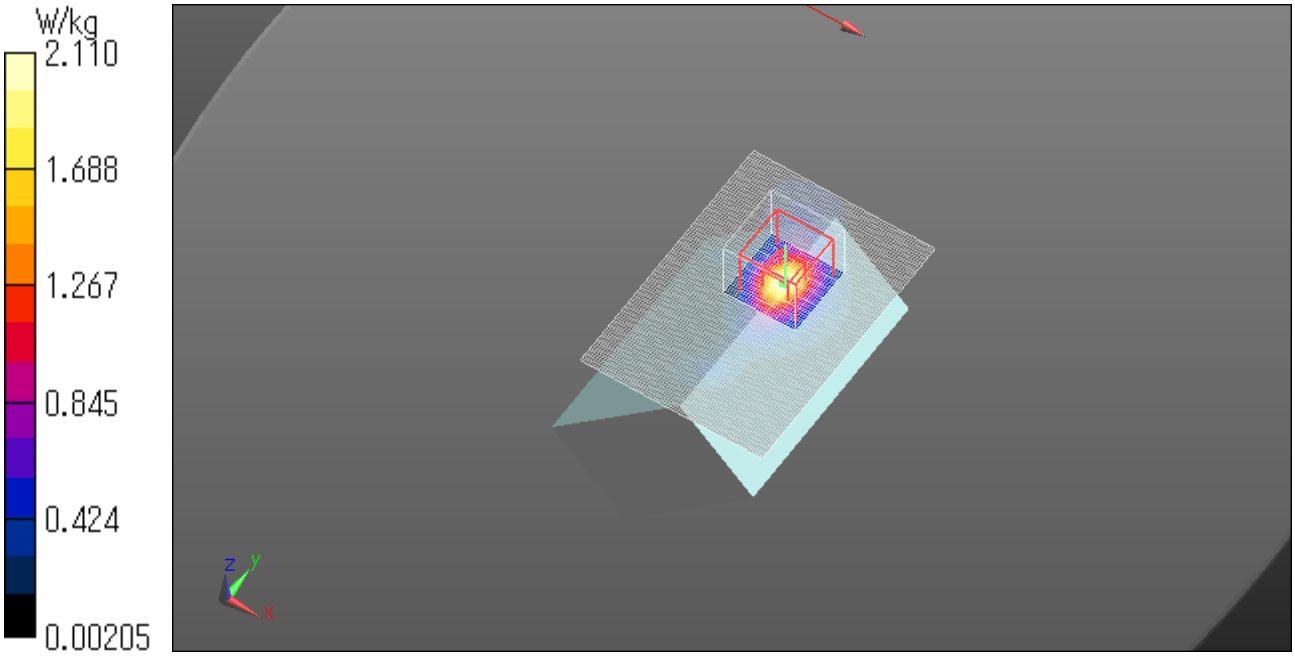

WLAN 5.8G 11a 6Mbps 5785MHz Diagonal side 0mm
Communication System: UID 0, WLAN 5GHz (0); Communication System Band: WLAN 5GHz High; Frequency: 5785 MHz; Duty Cycle: 1:1
Medium parameters used (interpolated): f = 5785 MHz; σ = 6.036 S/m; ε_r = 46.493; ρ = 1000 kg/m^3
Phantom section: Flat Section
Measurement Standard: DASY5 (IEEE/IEC/ANSI C63.19-2007)
DASY5 Configuration
Probe: EX3DV4 - SN3745; ConvF(3.6, 3.6, 3.6); Calibrated: 2016/04/20;
Sensor-Surface: 1.4mm (Mechanical Surface Detection)
Electronics: DAE4 Sn1369; Calibrated: 2016/05/13
Phantom: ELI v5.0 (30deg probe tilt); Type: QDOVA002AA; Serial: TP:1203
Measurement SW: DASY52, Version 52.8 (8); SEMCAD X Version 14.6.10 (7331)

Area Scan (71x101x1): Interpolated grid: dx=1.000 mm, dy=1.000 mm
Maximum value of SAR (interpolated) = 1.99 W/kg

Zoom Scan (8x8x7)/Cube 0: Measurement grid: dx=4mm, dy=4mm, dz=1.4mm
Reference Value = 19.51 V/m; Power Drift = -0.03 dB
Peak SAR (extrapolated) = 3.66 W/kg
SAR(1 g) = 0.849 W/kg; SAR(10 g) = 0.264 W/kg
Maximum value of SAR (measured) = 2.05 W/kg

Date: 2016/12/01
Ambient Temp. : 24.0 degree.C. Liquid Temp.; 23.5 degree.C.

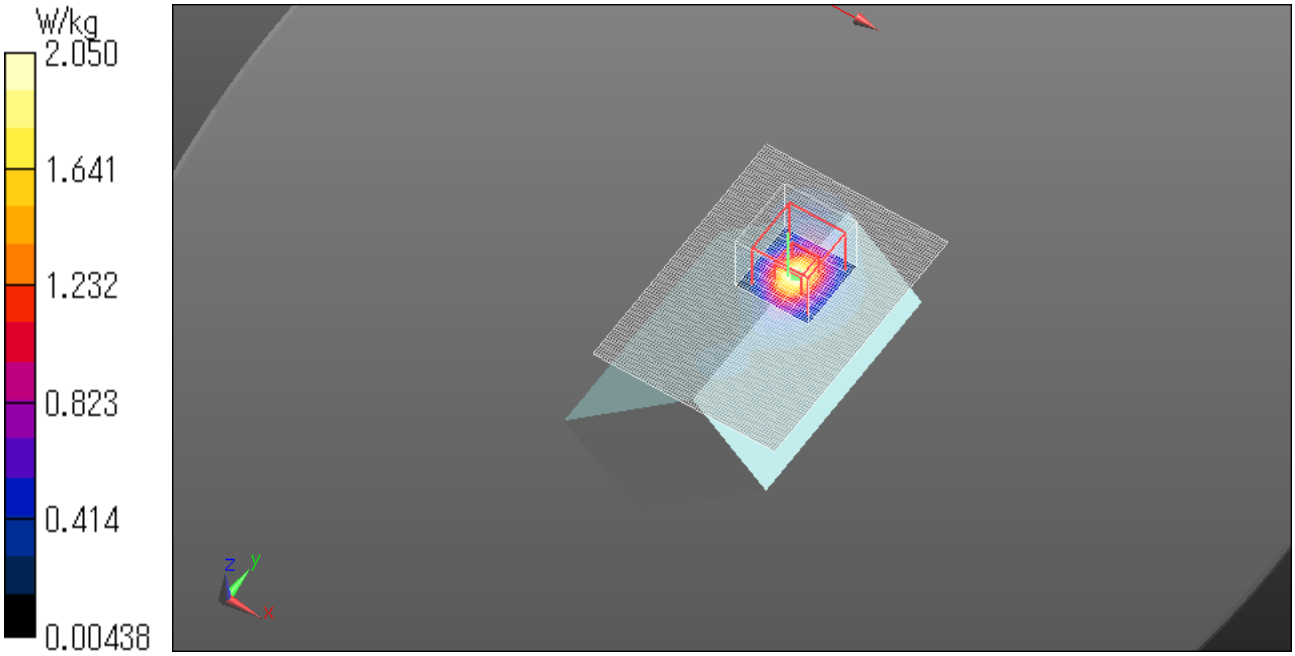

Body-worn accessory Measurement data

WLAN 5.8G 11a 6Mbps 5745MHz Rear 0mm with Magnet Clip
Communication System: UID 0, WLAN 5GHz (0); Communication System Band: WLAN 5GHz High; Frequency: 5745 MHz; Duty Cycle: 1:1
Medium parameters used (interpolated): f = 5745 MHz; σ = 6.031 S/m; ε_r = 46.444; ρ = 1000 kg/m^3
Phantom section: Flat Section
Measurement Standard: DASY5 (IEEE/IEC/ANSI C63.19-2007)
DASY5 Configuration
Probe: EX3DV4 - SN3745; ConvF(3.6, 3.6, 3.6); Calibrated: 2016/04/20;
Sensor-Surface: 1.4mm (Mechanical Surface Detection)
Electronics: DAE4 Sn1369; Calibrated: 2016/05/13
Phantom: ELI v5.0 (30deg probe tilt); Type: QDOVA002AA; Serial: TP:1203
Measurement SW: DASY52, Version 52.8 (8); SEMCAD X Version 14.6.10 (7331)

Area Scan (71x101x1): Interpolated grid: dx=1.000 mm, dy=1.000 mm
Maximum value of SAR (interpolated) = 0.113 W/kg

Zoom Scan (8x8x7)/Cube 0: Measurement grid: dx=4mm, dy=4mm, dz=1.4mm
Reference Value = 4.401 V/m; Power Drift = 0.09 dB
Peak SAR (extrapolated) = 0.208 W/kg
SAR(1 g) = 0.054 W/kg; SAR(10 g) = 0.025 W/kg
Maximum value of SAR (measured) = 0.114 W/kg

Date: 2016/12/01
Ambient Temp. : 24.0 degree.C. Liquid Temp.; 23.5 degree.C.

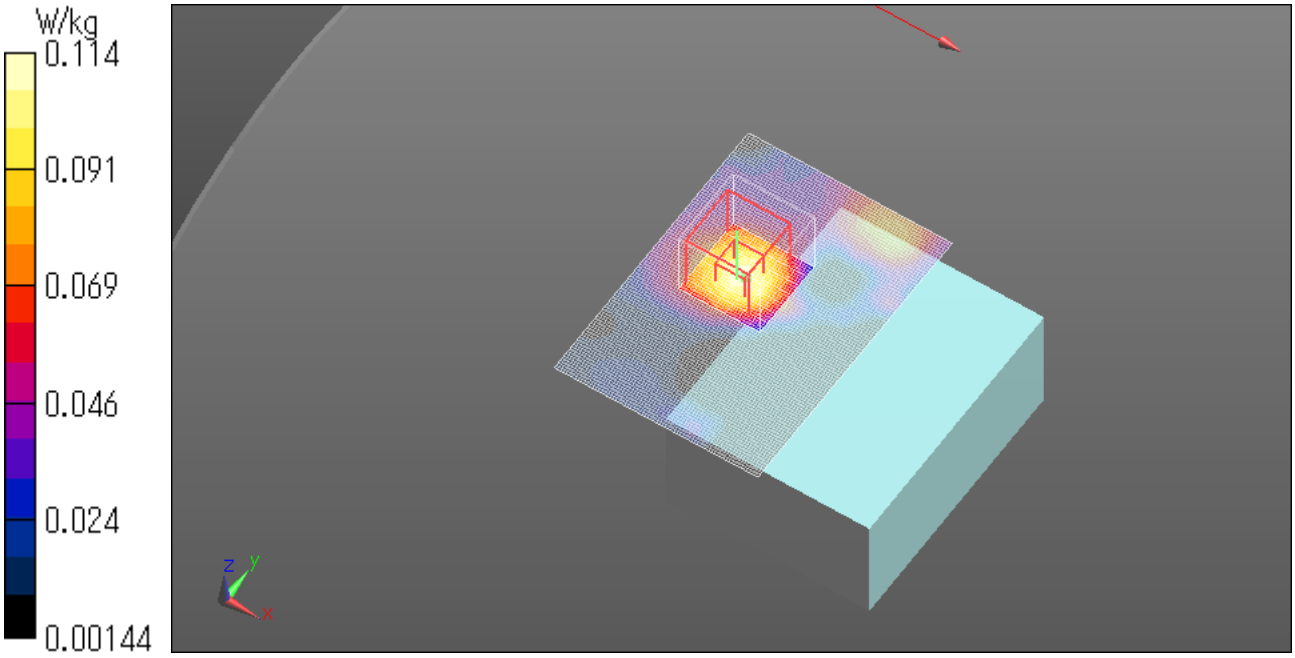

WLAN 5.8G 11a 6Mbps 5745MHz Rear 0mm with Main Clip
Communication System: UID 0, WLAN 5GHz (0); Communication System Band: WLAN 5GHz High; Frequency: 5745 MHz; Duty Cycle: 1:1
Medium parameters used (interpolated): f = 5745 MHz; σ = 6.031 S/m; ε_r = 46.444; ρ = 1000 kg/m^3
Phantom section: Flat Section
Measurement Standard: DASY5 (IEEE/IEC/ANSI C63.19-2007)
DASY5 Configuration
Probe: EX3DV4 - SN3745; ConvF(3.6, 3.6, 3.6); Calibrated: 2016/04/20;
Sensor-Surface: 1.4mm (Mechanical Surface Detection)
Electronics: DAE4 Sn1369; Calibrated: 2016/05/13
Phantom: ELI v5.0 (30deg probe tilt); Type: QDOVA002AA; Serial: TP:1203
Measurement SW: DASY52, Version 52.8 (8); SEMCAD X Version 14.6.10 (7331)

Area Scan (71x131x1): Interpolated grid: dx=1.000 mm, dy=1.000 mm
Maximum value of SAR (interpolated) = 0.0824 W/kg

Zoom Scan (8x8x7)/Cube 0: Measurement grid: dx=4mm, dy=4mm, dz=1.4mm
Reference Value = 3.382 V/m; Power Drift = 0.12 dB
Peak SAR (extrapolated) = 0.108 W/kg
SAR(1 g) = 0.033 W/kg; SAR(10 g) = 0.016 W/kg
Maximum value of SAR (measured) = 0.0708 W/kg

Date: 2016/12/01
Ambient Temp. : 24.0 degree.C. Liquid Temp.; 23.5 degree.C.

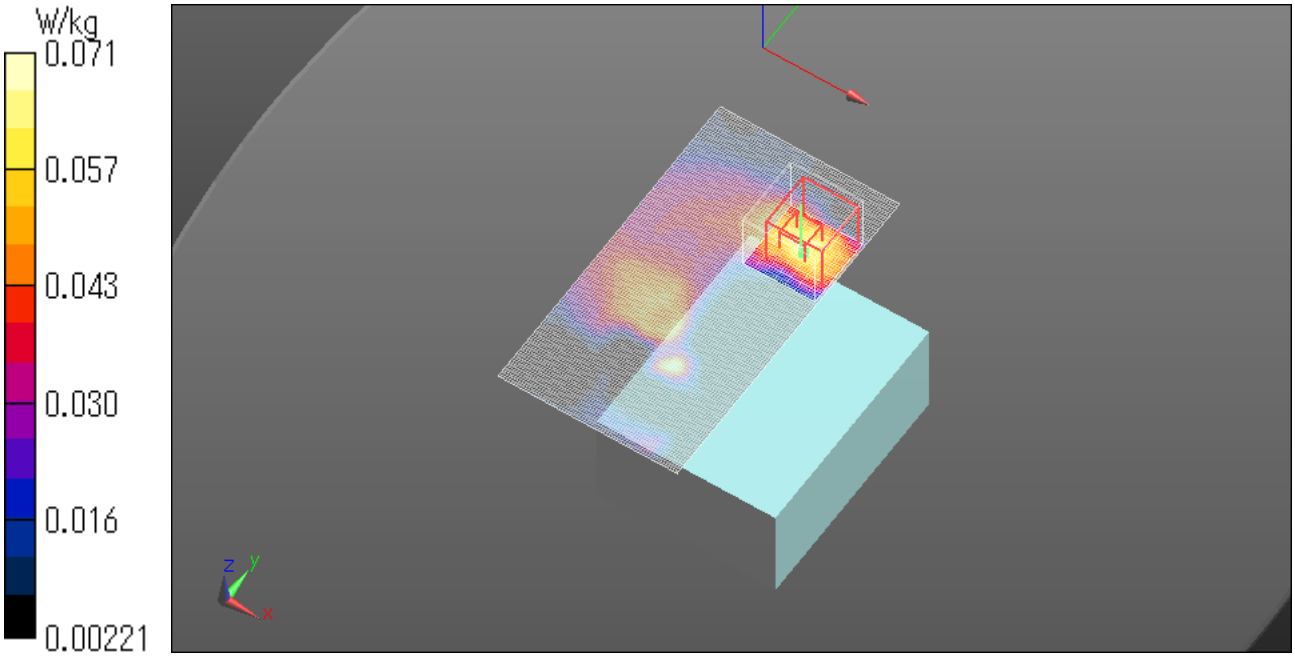

WLAN 5.8G 11a 6Mbps 5745MHz Rear 0mm with Pen Clip
Communication System: UID 0, WLAN 5GHz (0); Communication System Band: WLAN 5GHz High; Frequency: 5745 MHz; Duty Cycle: 1:1
Medium parameters used (interpolated): f = 5745 MHz; σ = 6.031 S/m; ε_r = 46.444; ρ = 1000 kg/m^3
Phantom section: Flat Section
Measurement Standard: DASY5 (IEEE/IEC/ANSI C63.19-2007)
DASY5 Configuration
Probe: EX3DV4 - SN3745; ConvF(3.6, 3.6, 3.6); Calibrated: 2016/04/20;
Sensor-Surface: 1.4mm (Mechanical Surface Detection)
Electronics: DAE4 Sn1369; Calibrated: 2016/05/13
Phantom: ELI v5.0 (30deg probe tilt); Type: QDOVA002AA; Serial: TP:1203
Measurement SW: DASY52, Version 52.8 (8); SEMCAD X Version 14.6.10 (7331)

Area Scan (71x131x1): Interpolated grid: dx=1.000 mm, dy=1.000 mm
Maximum value of SAR (interpolated) = 0.0887 W/kg

Zoom Scan (8x8x7)/Cube 0: Measurement grid: dx=4mm, dy=4mm, dz=1.4mm
Reference Value = 3.028 V/m; Power Drift = -0.06 dB
Peak SAR (extrapolated) = 0.142 W/kg
SAR(1 g) = 0.035 W/kg; SAR(10 g) = 0.013 W/kg
Maximum value of SAR (measured) = 0.0696 W/kg

Date: 2016/12/01
Ambient Temp. : 24.0 degree.C. Liquid Temp.; 23.5 degree.C.

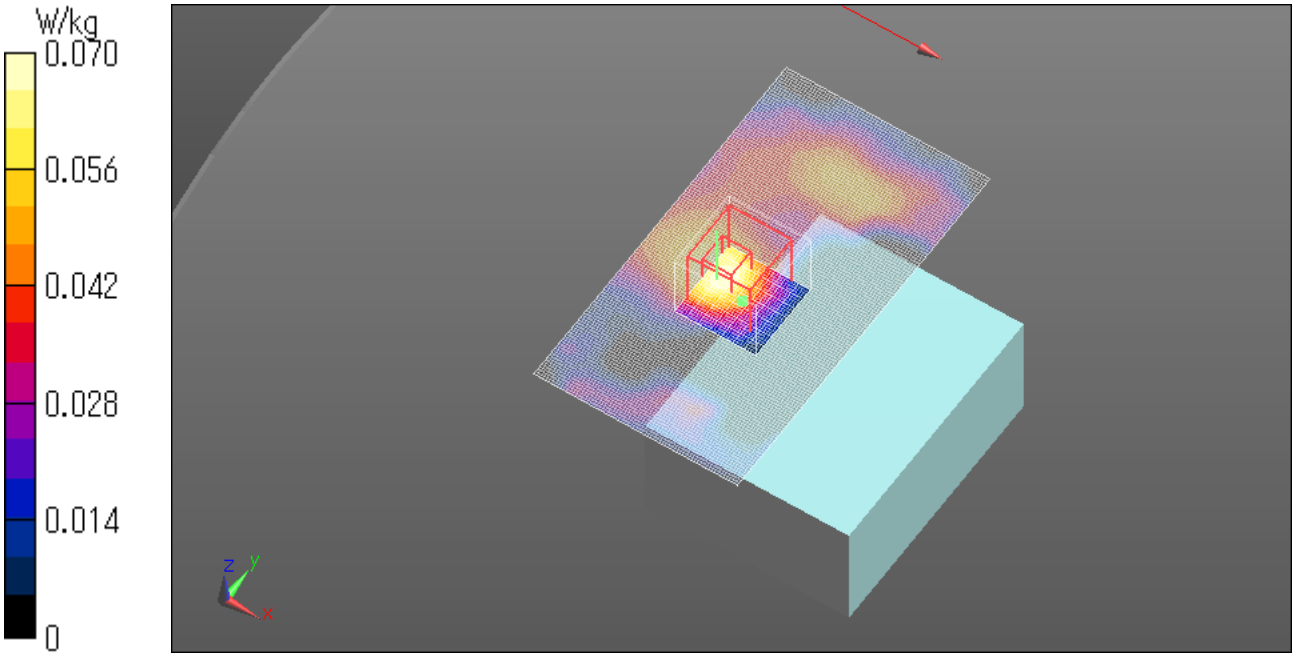

Repeated Measurement data

WLAN 5.3G 11a 6Mbps 5320MHz Left tilt 0mm Repeat
Communication System: UID 0, WLAN 11a/b/g/n (0); Communication System Band: 11a/n (W52 53); Frequency: 5320 MHz; Duty Cycle: 1:1
Medium parameters used: f = 5320 MHz; σ = 5.667 S/m; ε_r = 47.712; ρ = 1000 kg/m^3
Phantom section: Flat Section
Measurement Standard: DASY5 (IEEE/IEC/ANSI C63.19-2007)
DASY5 Configuration
Probe: EX3DV4 - SN3745; ConvF(3.9, 3.9, 3.9); Calibrated: 2016/04/20;
Sensor-Surface: 1.4mm (Mechanical Surface Detection)
Electronics: DAE4 Sn1369; Calibrated: 2016/05/13
Phantom: ELI v5.0 (30deg probe tilt); Type: QDOVA002AA; Serial: TP:1203
Measurement SW: DASY52, Version 52.8 (8); SEMCAD X Version 14.6.10 (7331)

Area Scan (71x101x1): Interpolated grid: dx=1.000 mm, dy=1.000 mm
Maximum value of SAR (interpolated) = 2.18 W/kg

Zoom Scan (8x8x7)/Cube 0: Measurement grid: dx=4mm, dy=4mm, dz=1.4mm
Reference Value = 19.77 V/m; Power Drift = -0.17 dB
Peak SAR (extrapolated) = 3.64 W/kg
SAR(1 g) = 0.941 W/kg; SAR(10 g) = 0.328 W/kg
Maximum value of SAR (measured) = 2.17 W/kg

Date: 2016/11/29
Ambient Temp. : 24.0 degree.C. Liquid Temp.; 23.5 degree.C.

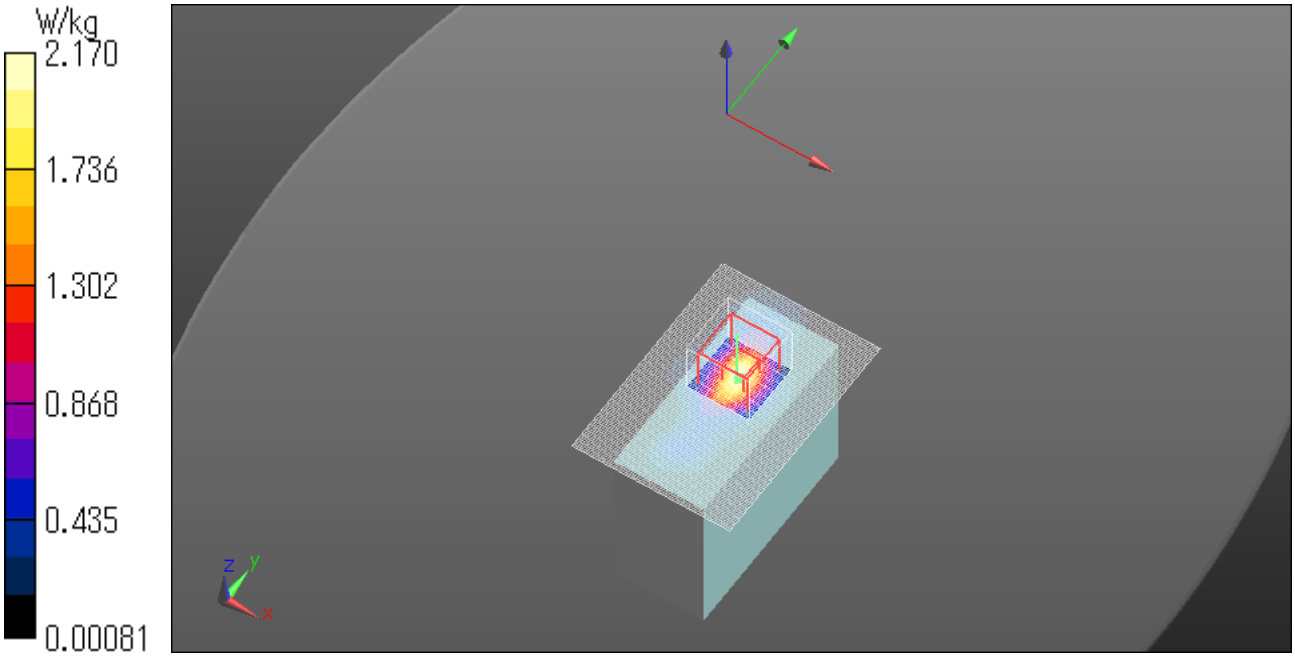

WLAN 5.5G 11a 6Mbps 5700MHz Left tilt 0mm Repeat
Communication System: UID 0, WLAN 5GHz (0); Communication System Band: WLAN 5GHz Mid; Frequency: 5700 MHz; Duty Cycle: 1:1
Medium parameters used: f = 5700 MHz; σ = 6.084 S/m; ε_r = 47.228; ρ = 1000 kg/m^3
Phantom section: Flat Section
Measurement Standard: DASY5 (IEEE/IEC/ANSI C63.19-2007)
DASY5 Configuration
Probe: EX3DV4 - SN3745; ConvF(3.6, 3.6, 3.6); Calibrated: 2016/04/20;
Sensor-Surface: 1.4mm (Mechanical Surface Detection)
Electronics: DAE4 Sn1369; Calibrated: 2016/05/13
Phantom: ELI v5.0 (30deg probe tilt); Type: QDOVA002AA; Serial: TP:1203
Measurement SW: DASY52, Version 52.8 (8); SEMCAD X Version 14.6.10 (7331)

Area Scan (71x101x1): Interpolated grid: dx=1.000 mm, dy=1.000 mm
Maximum value of SAR (interpolated) = 2.16 W/kg

Zoom Scan (8x8x7)/Cube 0: Measurement grid: dx=4mm, dy=4mm, dz=1.4mm
Reference Value = 19.76 V/m; Power Drift = -0.10 dB
Peak SAR (extrapolated) = 3.64 W/kg
SAR(1 g) = 0.939 W/kg; SAR(10 g) = 0.317 W/kg
Maximum value of SAR (measured) = 2.25 W/kg

Date: 2016/11/29
Ambient Temp. : 24.0 degree.C. Liquid Temp.; 23.5 degree.C.

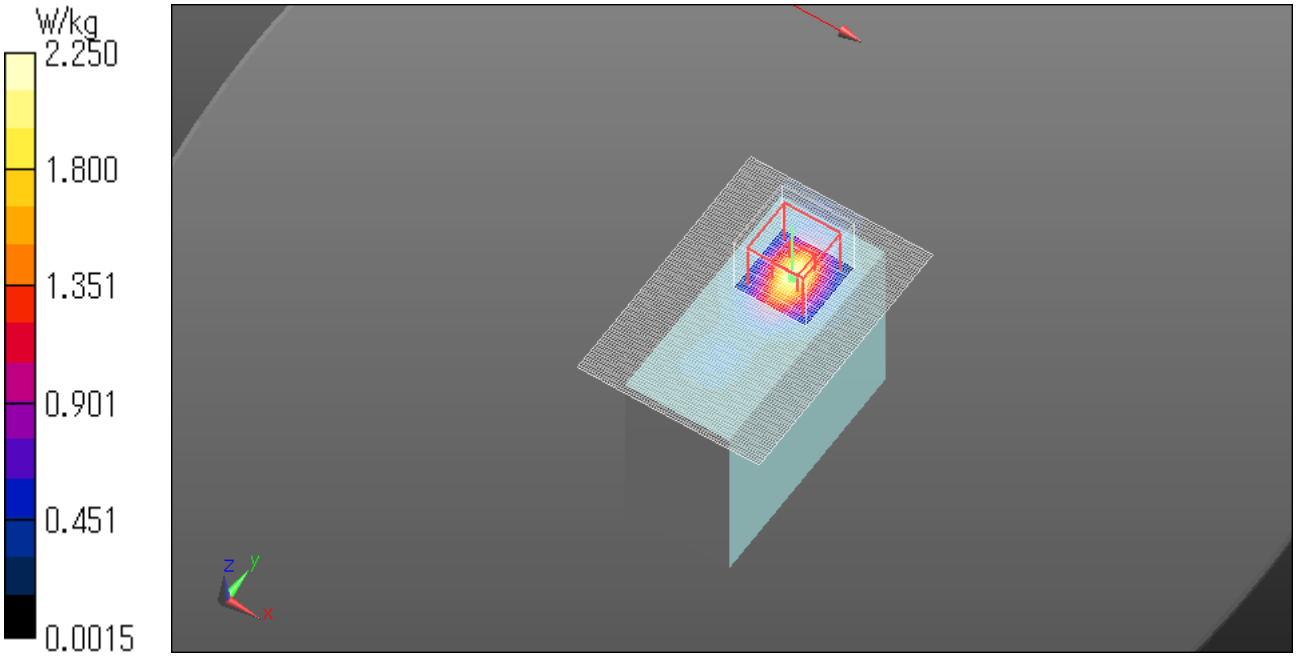

WLAN 5.8G 11a 6Mbps 5785MHz Left tilt 0mm Repeat
Communication System: UID 0, WLAN 5GHz (0); Communication System Band: WLAN 5GHz High; Frequency: 5785 MHz; Duty Cycle: 1:1
Medium parameters used (interpolated): f = 5785 MHz; σ = 6.036 S/m; ε_r = 46.493; ρ = 1000 kg/m^3
Phantom section: Flat Section
Measurement Standard: DASY5 (IEEE/IEC/ANSI C63.19-2007)
DASY5 Configuration
Probe: EX3DV4 - SN3745; ConvF(3.6, 3.6, 3.6); Calibrated: 2016/04/20;
Sensor-Surface: 1.4mm (Mechanical Surface Detection)
Electronics: DAE4 Sn1369; Calibrated: 2016/05/13
Phantom: ELI v5.0 (30deg probe tilt); Type: QDOVA002AA; Serial: TP:1203
Measurement SW: DASY52, Version 52.8 (8); SEMCAD X Version 14.6.10 (7331)

Area Scan (71x101x1): Interpolated grid: dx=1.000 mm, dy=1.000 mm
Maximum value of SAR (interpolated) = 2.08 W/kg

Zoom Scan (8x8x7)/Cube 0: Measurement grid: dx=4mm, dy=4mm, dz=1.4mm
Reference Value = 19.44 V/m; Power Drift = -0.18 dB
Peak SAR (extrapolated) = 3.68 W/kg
SAR(1 g) = 0.913 W/kg; SAR(10 g) = 0.295 W/kg
Maximum value of SAR (measured) = 2.24 W/kg

Date: 2016/12/01
Ambient Temp. : 24.0 degree.C. Liquid Temp.; 23.5 degree.C.

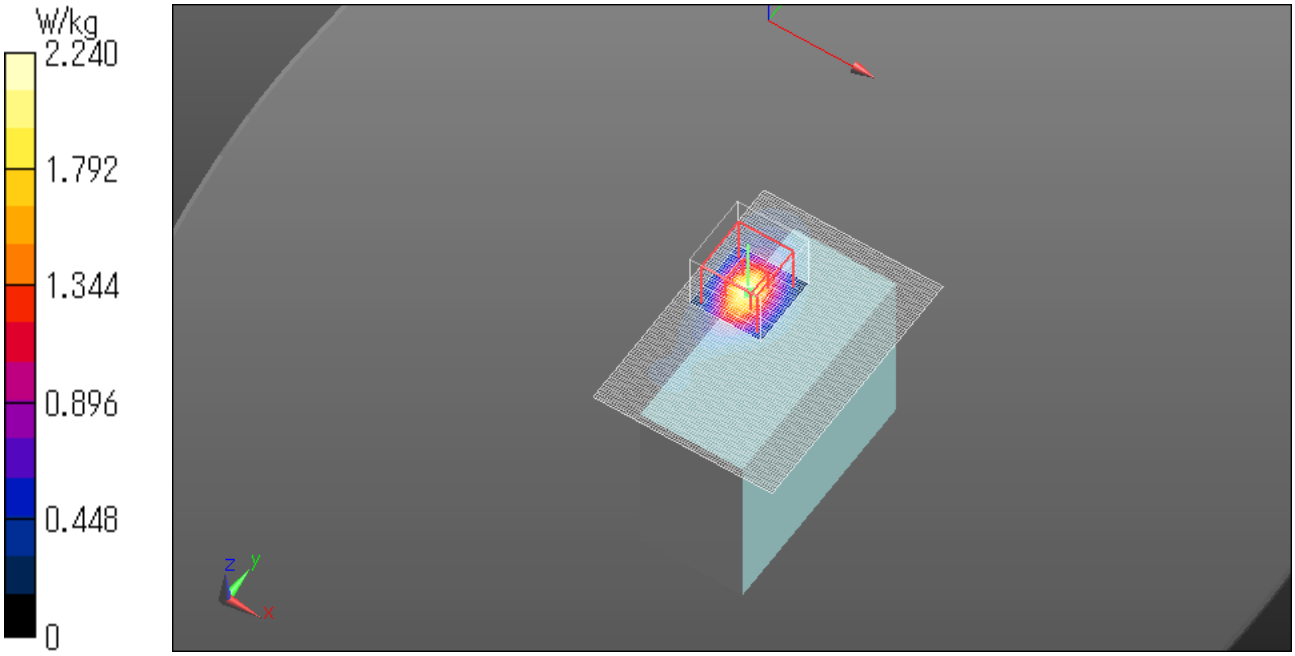

APPENDIX 2 : System Check

System check result Body 2450MHz

BODY 2450MHz System Check DATA / Dipole 2450MHz / Forward Conducted Power : 250mW

Communication System: UID 0, CW (0); Communication System Band: D2450 (2450.0 MHz); Frequency: 2450 MHz; Duty Cycle: 1:1
Medium parameters used: f = 2450 MHz; σ = 2.034 S/m; ε_r = 50.949; ρ = 1000 kg/m^3
Phantom section: Flat Section
Measurement Standard: DASY5 (IEEE/IEC/ANSI C63.19-2007)
DASY5 Configuration
Probe: EX3DV4 - SN3745; ConvF(6.73, 6.73, 6.73); Calibrated: 2016/04/20;
Sensor-Surface: 2mm (Mechanical Surface Detection)
Electronics: DAE4 Sn1369; Calibrated: 2016/05/13
Phantom: ELI v5.0 (30deg probe tilt); Type: QDOVA002AA; Serial: TP:1203
Measurement SW: DASY52, Version 52.8 (8); SEMCAD X Version 14.6.10 (7331)

Area Scan (81x71x1): Interpolated grid: dx=1.200 mm, dy=1.200 mm
Maximum value of SAR (interpolated) = 20.6 W/kg

Zoom Scan (7x7x7)/Cube 0: Measurement grid: dx=5mm, dy=5mm, dz=5mm
Reference Value = 100.1 V/m; Power Drift = -0.00 dB
Peak SAR (extrapolated) = 26.5 W/kg
SAR(1 g) = 13 W/kg; SAR(10 g) = 5.99 W/kg
Maximum value of SAR (measured) = 19.6 W/kg

Date: 2016/11/28
Ambient Temp. : 24.0 degree.C. Liquid Temp.; 23.5 degree.C.

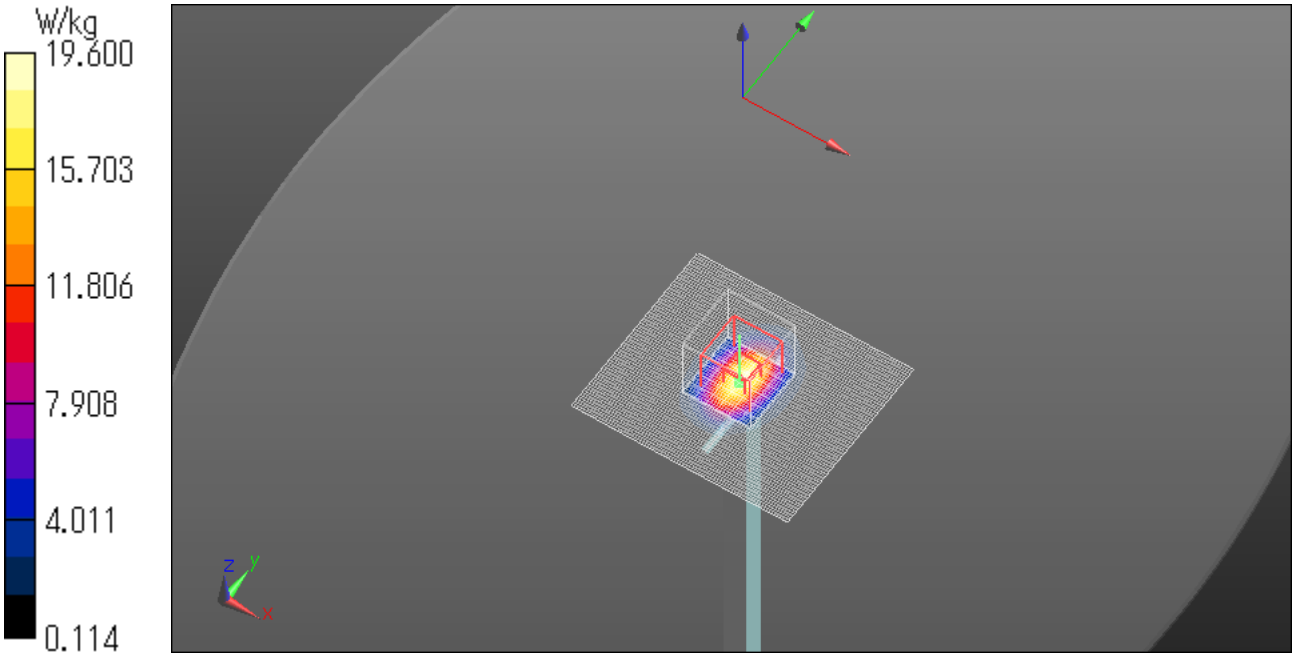

BODY 2450MHz System Check DATA / Dipole 2450MHz / Forward Conducted Power : 250mW
Communication System: UID 0, CW (0); Communication System Band: D2450 (2450.0 MHz); Frequency: 2450 MHz; Duty Cycle: 1:1
Medium parameters used: f = 2450 MHz; σ = 2.034 S/m; ε_r = 50.949; ρ = 1000 kg/m^3
Phantom section: Flat Section
Measurement Standard: DASY5 (IEEE/IEC/ANSI C63.19-2007)
DASY5 Configuration
Probe: EX3DV4 - SN3745; ConvF(6.73, 6.73, 6.73); Calibrated: 2016/04/20;
Sensor-Surface: 0mm (Fix Surface)
Electronics: DAE4 Sn1369; Calibrated: 2016/05/13
Phantom: ELI v5.0 (30deg probe tilt); Type: QDOVA002AA; Serial: TP:1203
Measurement SW: DASY52, Version 52.8 (8); SEMCAD X Version 14.6.10 (7331)

Z Scan (1x1x31): Measurement grid: dx=20mm, dy=20mm, dz=5mm
Maximum value of SAR (measured) = 10.8 W/kg

Date: 2016/11/28
Ambient Temp. : 24.0 degree.C. Liquid Temp.; 23.5 degree.C.

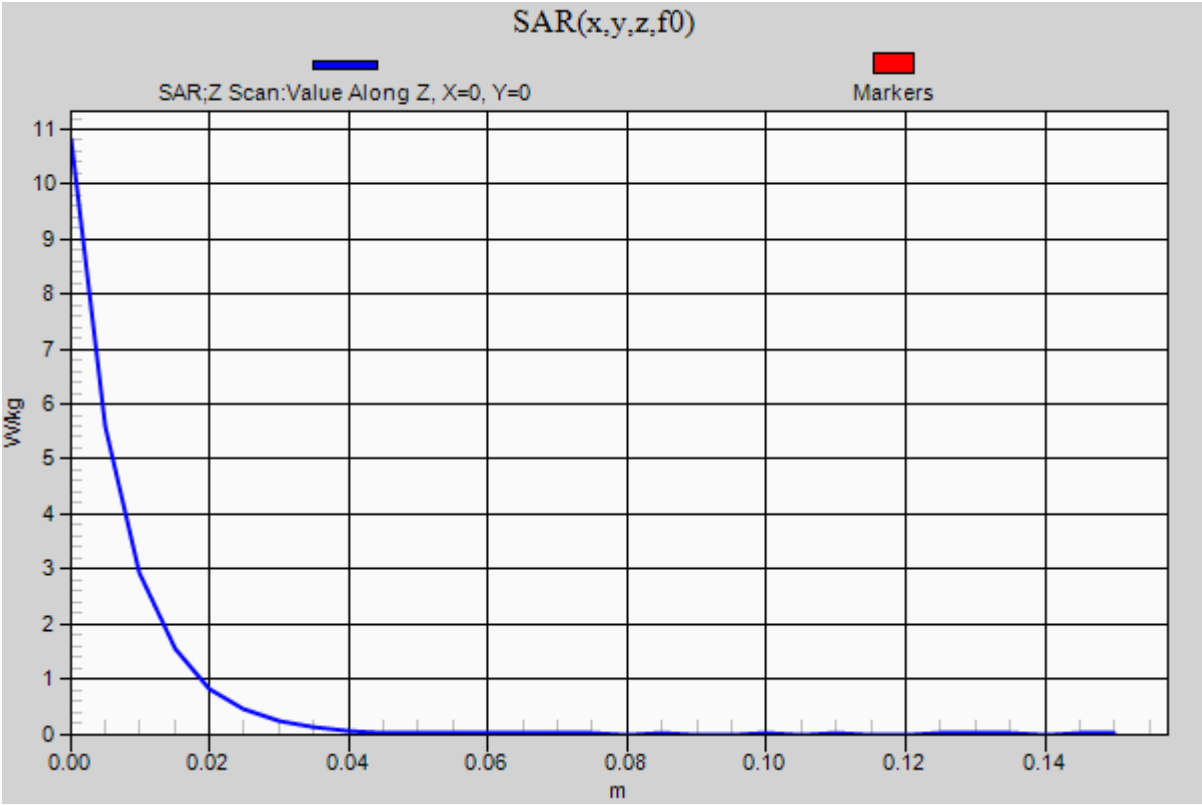

System check result Body 5250MHz

BODY 5250MHz System Check DATA / Dipole 5250MHz / Forward Conducted Power : 100mW

Communication System: UID 0, CW (0); Communication System Band: D5GHz (5000.0 - 6000.0 MHz); Frequency: 5250 MHz; Duty Cycle: 1:1
Medium parameters used: f = 5250 MHz; σ = 5.464 S/m; ε_r = 47.979; ρ = 1000 kg/m^3
Phantom section: Flat Section
Measurement Standard: DASY5 (IEEE/IEC/ANSI C63.19-2011)
DASY5 Configuration
Probe: EX3DV4 - SN3745; ConvF(3.98, 3.98, 3.98); Calibrated: 2016/04/20;
Sensor-Surface: 1.4mm (Mechanical Surface Detection)
Electronics: DAE4 Sn1369; Calibrated: 2016/05/13
Phantom: ELI v5.0 (30deg probe tilt); Type: QDOVA002AA; Serial: TP:1203
Measurement SW: DASY52, Version 52.8 (8); SEMCAD X Version 14.6.10 (7331)

Area Scan (91x91x1): Interpolated grid: dx=1.000 mm, dy=1.000 mm
Maximum value of SAR (interpolated) = 17.5 W/kg

Zoom Scan (4x4x1.4mm, graded), dist=1.4mm (8x8x7)/Cube 0: Measurement grid: dx=4mm, dy=4mm, dz=1.4mm
Reference Value = 67.98 V/m; Power Drift = 0.09 dB
Peak SAR (extrapolated) = 29.4 W/kg
SAR(1 g) = 7.49 W/kg; SAR(10 g) = 2.12 W/kg
Maximum value of SAR (measured) = 17.2 W/kg

Date: 2016/11/29
Ambient Temp. : 24.0 degree.C. Liquid Temp.; 23.5 degree.C.

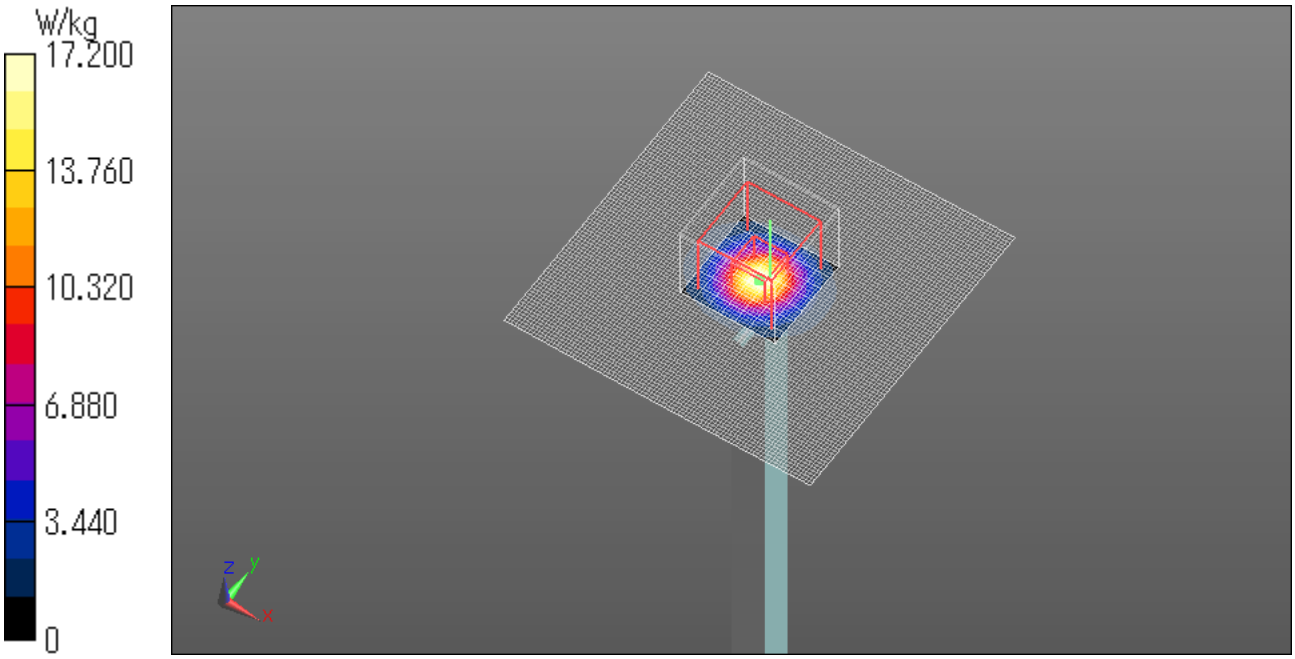

BODY 5250MHz System Check DATA / Dipole 5250MHz / Forward Conducted Power : 100mW
Communication System: UID 0, CW (0); Communication System Band: D5GHz (5000.0 - 6000.0 MHz); Frequency: 5250 MHz; Duty Cycle: 1:1
Medium parameters used: f = 5250 MHz; σ = 5.464 S/m; ε_r = 47.979; ρ = 1000 kg/m^3
Phantom section: Flat Section
Measurement Standard: DASY5 (IEEE/IEC/ANSI C63.19-2011)
DASY5 Configuration
Probe: EX3DV4 - SN3745; ConvF(3.98, 3.98, 3.98); Calibrated: 2016/04/20;
Sensor-Surface: 0mm (Fix Surface)
Electronics: DAE4 Sn1369; Calibrated: 2016/05/13
Phantom: ELI v5.0 (30deg probe tilt); Type: QDOVA002AA; Serial: TP:1203
Measurement SW: DASY52, Version 52.8 (8); SEMCAD X Version 14.6.10 (7331)

Z Scan (1x1x31): Measurement grid: dx=20mm, dy=20mm, dz=5mm
Maximum value of SAR (measured) = 5.01 W/kg

Date: 2016/11/29
Ambient Temp. : 24.0 degree.C. Liquid Temp.; 23.5 degree.C.

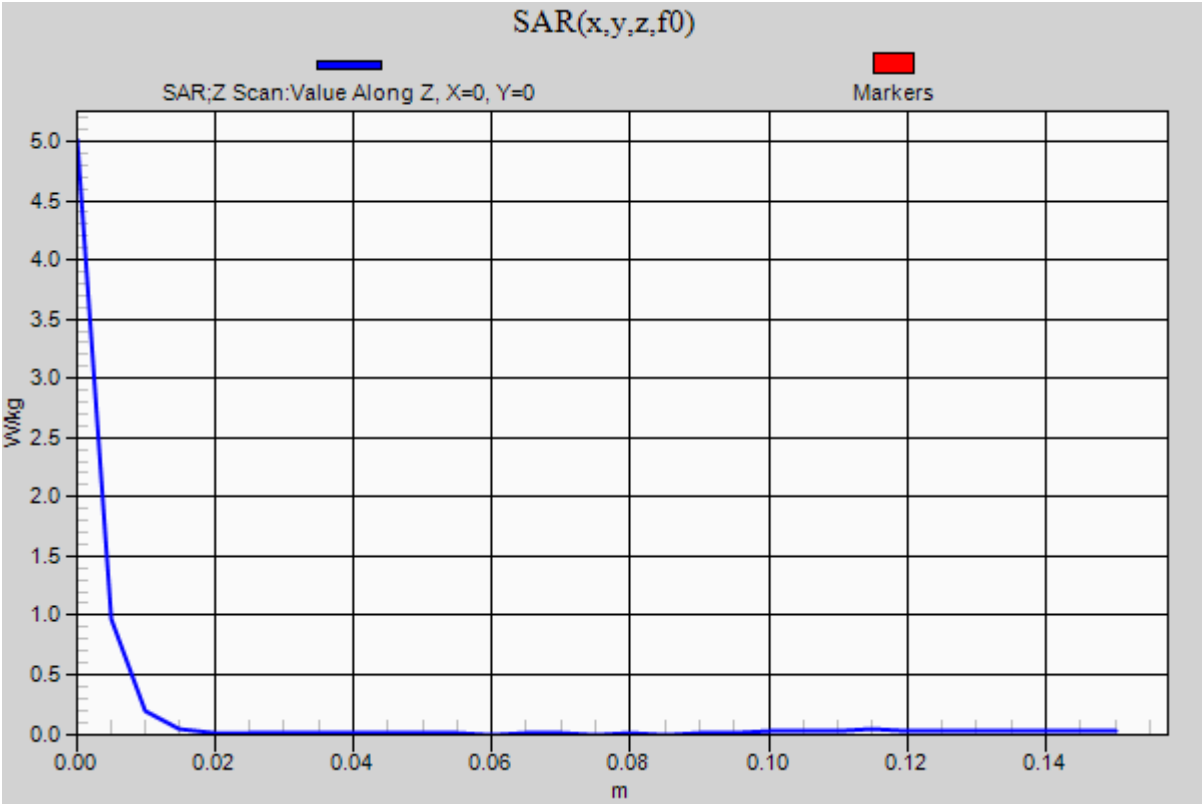

System check result Body 5600MHz

BODY 5600MHz System Check DATA / Dipole 5600MHz / Forward Conducted Power : 100mW

Communication System: UID 0, CW (0); Communication System Band: D5GHz (5000.0 - 6000.0 MHz); Frequency: 5600 MHz; Duty Cycle: 1:1
Medium parameters used: f = 5600 MHz; σ = 5.882 S/m; ε_r = 47.542; ρ = 1000 kg/m^3
Phantom section: Flat Section
Measurement Standard: DASY5 (IEEE/IEC/ANSI C63.19-2011)
DASY5 Configuration
Probe: EX3DV4 - SN3745; ConvF(3.37, 3.37, 3.37); Calibrated: 2016/04/20;
Sensor-Surface: 1.4mm (Mechanical Surface Detection)
Electronics: DAE4 Sn1369; Calibrated: 2016/05/13
Phantom: ELI v5.0 (30deg probe tilt); Type: QDOVA002AA; Serial: TP:1203
Measurement SW: DASY52, Version 52.8 (8); SEMCAD X Version 14.6.10 (7331)

Area Scan (91x91x1): Interpolated grid: dx=1.000 mm, dy=1.000 mm
Maximum value of SAR (interpolated) = 19.8 W/kg

Zoom Scan (4x4x1.4mm, graded), dist=1.4mm (8x8x7)/Cube 0: Measurement grid: dx=4mm, dy=4mm, dz=1.4mm
Reference Value = 71.07 V/m; Power Drift = 0.05 dB
Peak SAR (extrapolated) = 33.2 W/kg
SAR(1 g) = 8.22 W/kg; SAR(10 g) = 2.29 W/kg
Maximum value of SAR (measured) = 19.5 W/kg

Date: 2016/11/29
Ambient Temp. : 24.0 degree.C. Liquid Temp.; 23.5 degree.C.

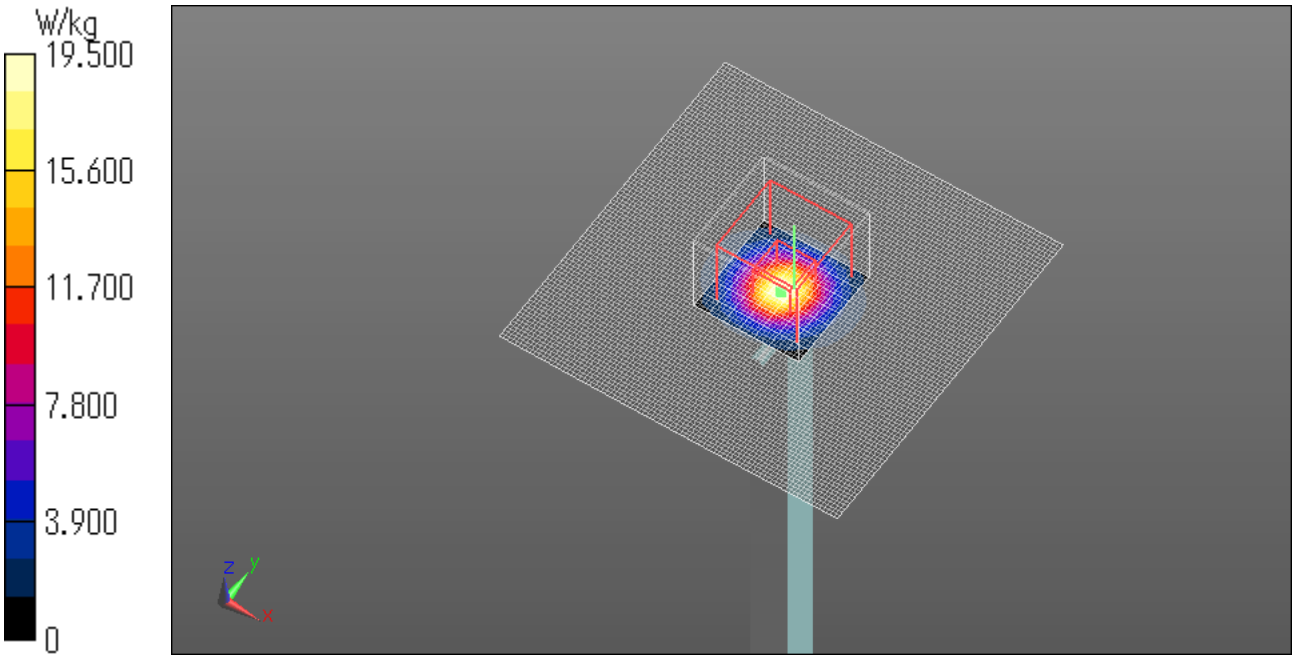

BODY 5600MHz System Check DATA / Dipole 5600MHz / Forward Conducted Power : 100mW
Communication System: UID 0, CW (0); Communication System Band: D5GHz (5000.0 - 6000.0 MHz); Frequency: 5600 MHz; Duty Cycle: 1:1
Medium parameters used: f = 5600 MHz; σ = 5.882 S/m; ε_r = 47.542; ρ = 1000 kg/m^3
Phantom section: Flat Section
Measurement Standard: DASY5 (IEEE/IEC/ANSI C63.19-2011)
DASY5 Configuration
Probe: EX3DV4 - SN3745; ConvF(3.37, 3.37, 3.37); Calibrated: 2016/04/20;
Sensor-Surface: 0mm (Fix Surface)
Electronics: DAE4 Sn1369; Calibrated: 2016/05/13
Phantom: ELI v5.0 (30deg probe tilt); Type: QDOVA002AA; Serial: TP:1203
Measurement SW: DASY52, Version 52.8 (8); SEMCAD X Version 14.6.10 (7331)

Z Scan (1x1x31): Measurement grid: dx=20mm, dy=20mm, dz=5mm
Maximum value of SAR (measured) = 5.21 W/kg

Date: 2016/11/29
Ambient Temp. : 24.0 degree.C. Liquid Temp.; 23.5 degree.C.

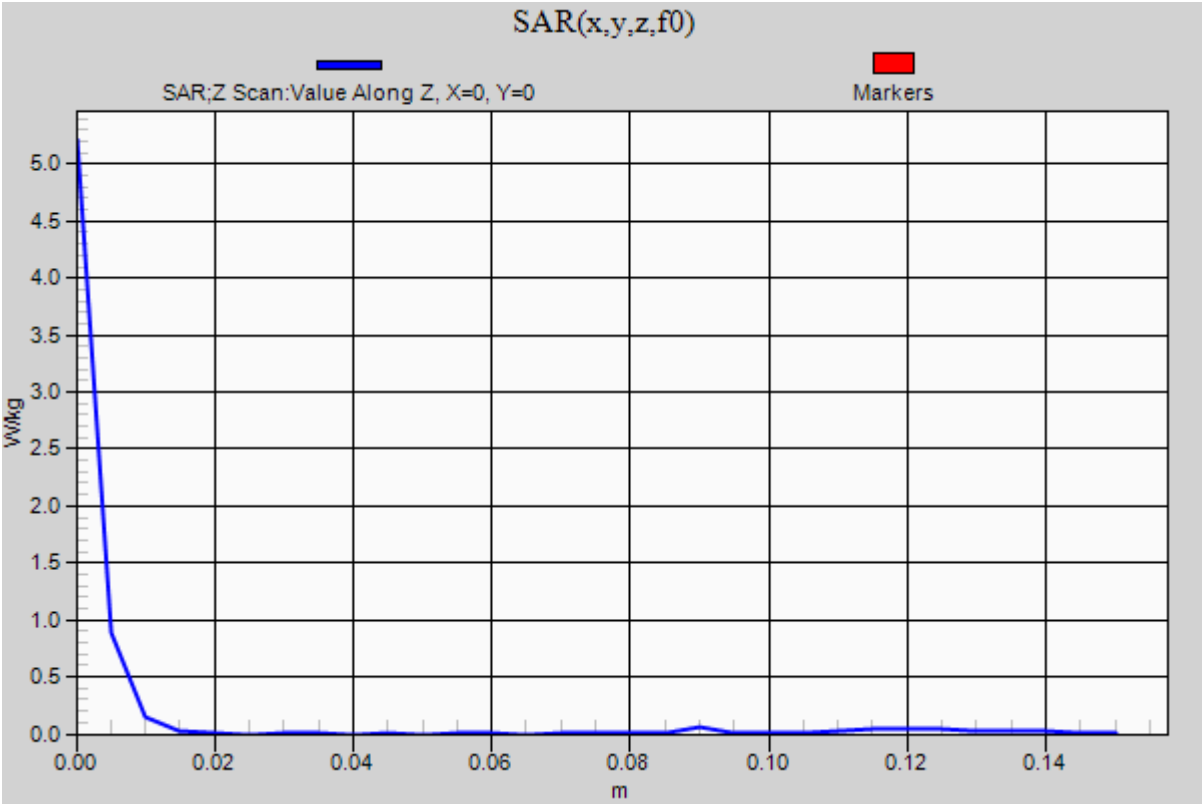

System check result Body 5750MHz

BODY 5750MHz System Check DATA / Dipole 5750MH / Forward Conducted Power : 100mW

Communication System: UID 0, CW (0); Communication System Band: D5GHz (5000.0 - 6000.0 MHz); Frequency: 5750 MHz; Duty Cycle: 1:1
Medium parameters used: f = 5750 MHz; σ = 6.035 S/m; ε_r = 46.469; ρ = 1000 kg/m^3
Phantom section: Flat Section
Measurement Standard: DASY5 (IEEE/IEC/ANSI C63.19-2011)
DASY5 Configuration
Probe: EX3DV4 - SN3745; ConvF(3.6, 3.6, 3.6); Calibrated: 2016/04/20;
Sensor-Surface: 1.4mm (Mechanical Surface Detection)
Electronics: DAE4 Sn1369; Calibrated: 2016/05/13
Phantom: ELI v5.0 (30deg probe tilt); Type: QDOVA002AA; Serial: TP:1203
Measurement SW: DASY52, Version 52.8 (8); SEMCAD X Version 14.6.10 (7331)

Area Scan (91x91x1): Interpolated grid: dx=1.000 mm, dy=1.000 mm
Maximum value of SAR (interpolated) = 15.9 W/kg

Zoom Scan (4x4x1.4mm, graded), dist=1.4mm (8x8x7)/Cube 0: Measurement grid: dx=4mm, dy=4mm, dz=1.4mm
Reference Value = 64.48 V/m; Power Drift = 0.05 dB
Peak SAR (extrapolated) = 28.5 W/kg
SAR(1 g) = 6.74 W/kg; SAR(10 g) = 1.89 W/kg
Maximum value of SAR (measured) = 16.1 W/kg
Date: 2016/12/01
Ambient Temp. : 24.0 degree.C. Liquid Temp.; 23.5 degree.C.

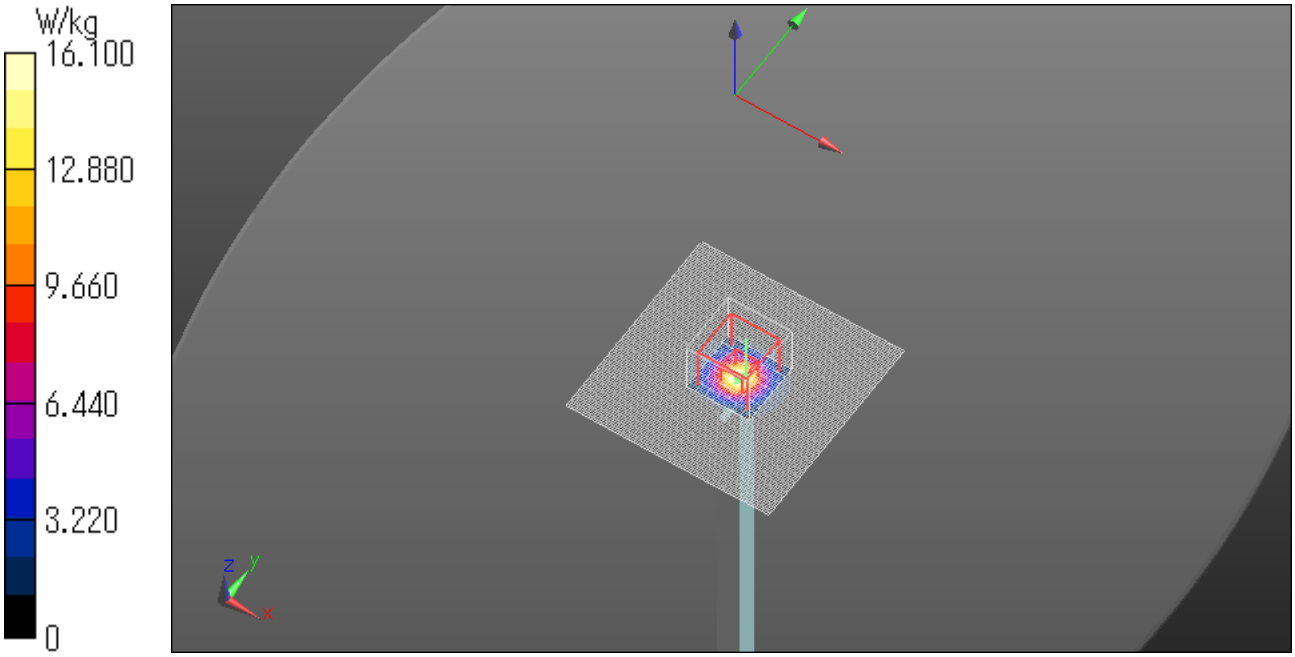

BODY 5750MHz System Check DATA / Dipole 5750MH / Forward Conducted Power : 100mW
Communication System: UID 0, CW (0); Communication System Band: D5GHz (5000.0 - 6000.0 MHz); Frequency: 5750 MHz; Duty Cycle: 1:1
Medium parameters used: f = 5750 MHz; σ = 6.035 S/m; ε_r = 46.469; ρ = 1000 kg/m^3
Phantom section: Flat Section
Measurement Standard: DASY5 (IEEE/IEC/ANSI C63.19-2011)
DASY5 Configuration
Probe: EX3DV4 - SN3745; ConvF(3.6, 3.6, 3.6); Calibrated: 2016/04/20;
Sensor-Surface: 0mm (Fix Surface)
Electronics: DAE4 Sn1369; Calibrated: 2016/05/13
Phantom: ELI v5.0 (30deg probe tilt); Type: QDOVA002AA; Serial: TP:1203
Measurement SW: DASY52, Version 52.8 (8); SEMCAD X Version 14.6.10 (7331)

Z Scan (1x1x31): Measurement grid: dx=20mm, dy=20mm, dz=5mm
Maximum value of SAR (measured) = 4.33 W/kg
Date: 2016/12/01
Ambient Temp. : 24.0 degree.C. Liquid Temp.; 23.5 degree.C.

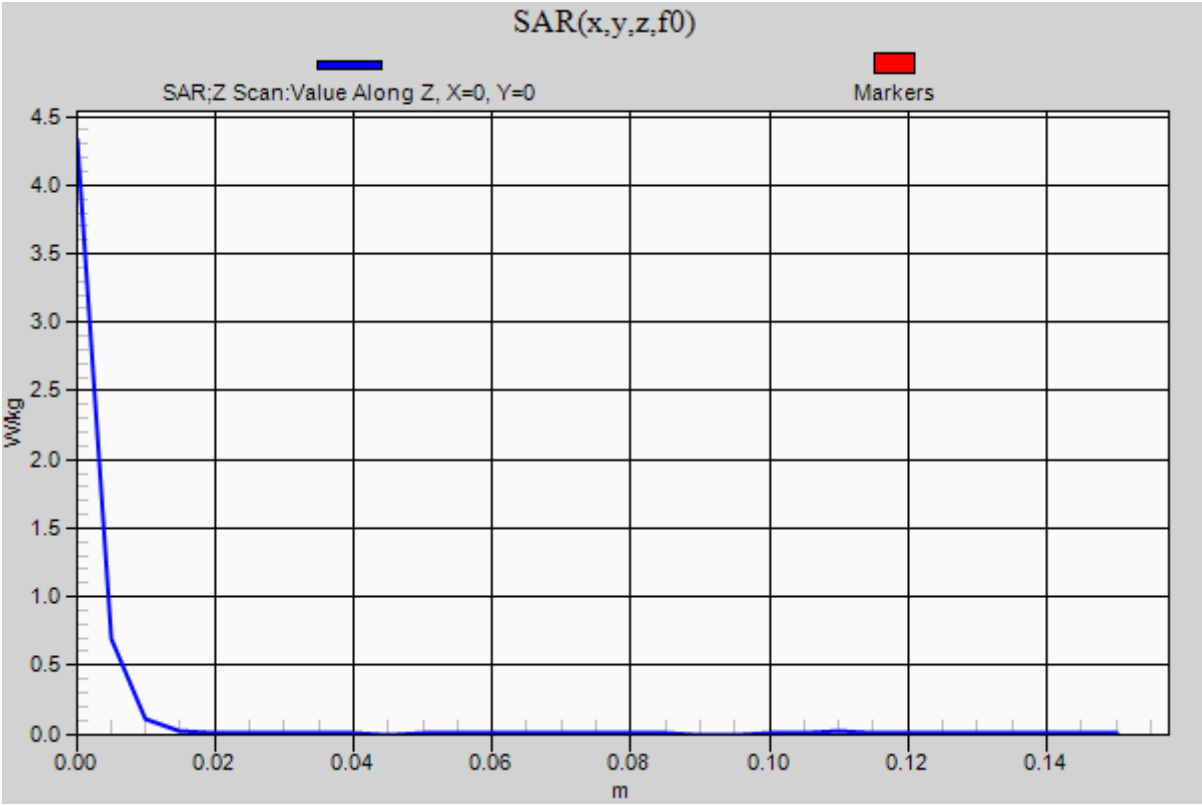

APPENDIX 3 : System specifications

Configuration and peripherals

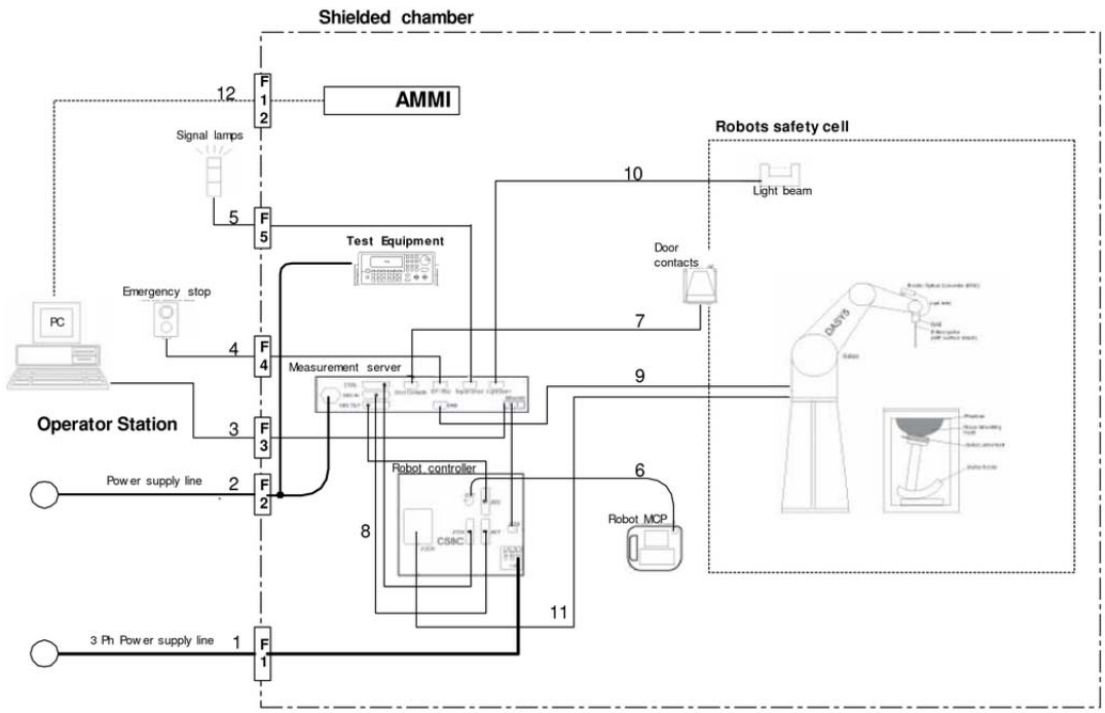

The DASY5 system for performing compliance tests consist of the following items:

a) A standard high precision 6-axis robot (Stäubli RX family) with controller and software.
An arm extension for accommodating the data acquisition electronics (DAE).

b) An isotropic field probe optimized and calibrated for the targeted measurement.

c) A data acquisition electronic (DAE), which performs the signal amplification, signal multiplexing, AD-conversion, offset measurements, mechanical surface detection, collision detection, etc. The unit is battery powered with standard or rechargeable batteries. The signal is optically transmitted to the EOC.

d) The Electro-optical converter (EOC) performs the conversion between optical and electrical of the signals for the digital communication to the DAE and for the analog signal from the optical surface detection.
The EOC is connected to the measurement server.

e) The function of the measurement server is to perform the time critical tasks such as signal filtering, control of the robot operation and fast movement interrupts.

f) The Light Beam used is for probe alignment. This improves the (absolute) accuracy of the probe positioning.

g) A computer running WinXP and the DASY5 software.

h) Remote control with teaches pendant and additional circuitry for robot safety such as warning lamps, etc.

i) The phantom, the device holder and other accessories according to the targeted measurement.

Specifications

a)Robot TX60L

Number of Axes	:	6
Nominal Load	:	2 kg
Maximum Load	:	5kg
Reach	:	920mm
Repeatability	:	+/-0.03mm
Control Unit	:	CS8c
Programming Language	:	VAL3
Weight	:	52.2kg
Manufacture	:	Stäubli Robotics

b)E-Field Probe

Model	:	EX3DV4
Construction	:	Symmetrical design with triangular core Built-in shielding against static charges PEEK enclosure material (resistant to organic solvents, e.g., glycol ether)
Frequency	:	10 MHz to > 6 GHz Linearity: ± 0.2 dB (30 MHz to 6 GHz)
Directivity	:	+/-0.3 dB in HSL (rotation around probe axis) +/-0.5 dB in tissue material (rotation normal probe axis)
Dynamic Range	:	10uW/g to > 100 mW/g;Linearity +/-0.2 dB(noise: typically < 1uW/g)
Dimensions	:	Overall length: 337 mm (Tip: 20 mm) Tip diameter: 2.5mm (Body: 12 mm) Typical distance from probe tip to dipole centers: 1 mm
Application	:	Highprecision dosimetric measurement in any exposure scenario (e.g., very strong gradient fields).Only probe which enables compliance testing for frequencies up to 6GHz with precision of better 30%.
Manufacture	:	Schmid & Partner Engineering AG

EX3DV4 E-field Probe

c)Data Acquisition Electronic (DAE4)

Features	:	Signal amplifier, multiplexer, A/D converter and control logic Serial optical link for communication with DASY5 embedded system (fully remote controlled) Two step probe touch detector for mechanical surface detection and emergency robot stop
Measurement Range	:	-100 to +300 mV (16 bit resolution and two range settings: 4mV, 400mV)
Input Offset voltage	:	< 5 µV (with auto zero)
Input Resistance	:	200 MΩ
Input Bias Current	:	< 50 fA
Battery Power	:	> 10 h of operation (with two 9.6 V NiMH accus)
Dimension	:	60 x 60 x 68 mm
Manufacture	:	Schmid & Partner Engineering AG

d)Electro-Optic Converter (EOC)

Version	:	EOC 61
Description	:	for TX60 robot arm, including proximity sensor
Manufacture	:	Schmid & Partner Engineering AG

e)DASY5 Measurement server

Features	:	Intel ULV Celeron 400MHz 128MB chip disk and 128MB RAM 16 Bit A/D converter for surface detection system Vacuum Fluorescent Display Robot Interface Serial link to DAE (with watchdog supervision) Door contact port (Possibility to connect a light curtain) Emergency stop port (to connect the remote control) Signal lamps port Light beam port Three Ethernet connection ports Two USB 2.0 Ports Two serial links Expansion port for future applications
Dimensions (L x W x H)	:	440 x 241 x 89 mm
Manufacture	:	Schmid & Partner Engineering AG

f) Light Beam Switches

Version	:	LB5
Dimensions (L x H)	:	110 x 80 mm
Thickness	:	12 mm
Beam-length	:	80 mm
Manufacture	:	Schmid & Partner Engineering AG

g)Software

Item	:	Dosimetric Assessment System DASY5
Type No.	:	SD 000 401A, SD 000 402A
Software version No.	:	DASY52, Version 52.6 (1)
Manufacture / Origin	:	Schmid & Partner Engineering AG

h)Robot Control Unit

Weight	:	70 Kg
AC Input Voltage	:	selectable
Manufacturer	:	Stäubli Robotics

i)Phantom and Device Holder

Phantom

Type	:	SAM Twin Phantom V4.0
Description	:	The shell corresponds to the specifications of the Specific Anthropomorphic Mannequin (SAM) phantom defined in IEEE 1528 and IEC 62209-1. It enables the dosimetric evaluation of left and right hand phone usage as well as body mounted usage at the flat phantom region. A cover prevents evaporation of the liquid. Reference markings on the phantom allow the complete setup of all predefined phantom positions and measurement grids by teaching three points with the robot.
Material	:	Vinylester, glass fiber reinforced (VE-GF)
Shell Material	:	Fiberglass
Thickness	:	2.0 +/-0.2 mm
Dimensions	:	Length: 1000 mm Width: 500 mm Height: adjustable feet
Volume	:	Approx. 25 liters
Manufacture	:	Schmid & Partner Engineering AG

Type	:	2mm Flat phantom ERI4.0
Description	:	Phantom for compliance testing of handheld and body-mounted wireless devices in the frequency range of 30 MHz to 6 GHz. ELI4 is fully compatible with the latest draft of the standard IEC 62209 Part II and all known tissue simulating liquids. ELI4 has been optimized regarding its performance and can be integrated into our standard phantom tables. A cover prevents evaporation of the liquid. Reference markings on the phantom allow installation of the complete setup, including all predefined phantom positions and measurement grids, by teaching three points. The phantom is supported by software version DASY4.5 and higher and is compatible with all SPEAG dosimetric probes and dipoles.
Material	:	Vinylester, glass fiber reinforced (VE-GF)
Shell Thickness	:	2.0 ± 0.2 mm (sagging: <1%)
Filling Volume	:	approx. 30 liters
Dimensions	:	Major ellipse axis: 600 mm Minor axis: 400 mm
Manufacture	:	Schmid & Partner Engineering AG

Device Holder

In combination with the Twin SAM Phantom V4.0/V4.0c or ELI4, the Mounting Device enables the rotation of the mounted transmitter device in spherical coordinates. Rotation point is the ear opening point. Transmitter devices can be easily and accurately positioned according to IEC, IEEE, FCC or other specifications. The device holder can be locked for positioning at different phantom sections (left head, right head, flat).

Material : POM

Laptio Extensions kit

Simple but effective and easy-to-use extension for Mounting Device that facilitates the testing of larger devices according to IEC 62209-2 (e.g., laptops, cameras, etc.). It is lightweight and fits easily on the upper part of the Mounting Device in place of the phone positioner. The extension is fully compatible with the Twin-SAM, ELI4 Phantoms.

Material : POM, Acrylic glass, Foam

Urethane

For this measurement, the urethane foam was used as device holder.

j)Simulated Tissues (Liquid)

The following tissue formulations are provided for reference only as some of the parameters have not been thoroughly verified. The composition of ingredients may be modified accordingly to achieve the desired target tissue parameters required for required for routine SAR evaluation.

Mixture (%)	Frequency (MHz)									
	450		900		1800		1950		2450	
Tissue Type	Head	Body	Head	Body	Head	Body	Head	Body	Head	Body
Water	38.91	46.21	40.29	50.75	55.24	70.17	55.41	69.79	55.0	68.64
Sugar	56.93	51.17	57.90	48.21	-	-	-	-	-	-
Cellulose	0.25	0.18	0.24	0.00	-	-		-	-	-
Salt (NaCl)	3.79	2.34	1.38	0.94	0.31	0.39	0.08	0.2	-	-
Preventol	0.12	0.08	0.18	0.10	-				-	-
DGMBE	-	-	-	-	44.45	29.44	44.51	30.0	45.0	31.37
Dielectric Constant	43.42	58.0	42.54	56.1	42.0	56.8	39.9	54.0	39.8	52.5
Conductivity (S/m)	0.85	0.83	0.91	0.95	1.0	1.07	1.42	1.45	1.88	1.78

Note:DGMBE(Diethylenglycol-monobuthyl ether)

The simulated tissue (liquid) of 1800MHz was used for the test frequency of 1700MHz to 1800MHz.

Mixture (%)	Frequency(MHz)	
	650&750	1450
Tissue Type	Head and Body	Head and Body
Water	35-58%	52-75%
Sugar	40-60%	-
Cellulose	<0.3%	-
Salt (NaCl)	0-6%	<1%
Preventol	0.1-0.7%	-
DGMBE	-	25-48%

Mixture (%)	Frequency(MHz)	
	5800	
Tissue Type	Head	Body
Water	64.0	78.0
Mineral Oil	18.0	11.0
Emulsifiers	15.0	9.0
Additives and salt	3.0	2.0

System Check Dipole SAR Calibration Certificate -Dipole 2450MHz(D2450V2,S/N:854)

Calibration Laboratory of
Schmid & Partner
Engineering AG
Zeughausstrasse 43, 8004 Zurich, Switzerland

S Schweizerischer Kalibrierdienst
C Service suisse d'étalonnage
Servizio svizzero di taratura
S Swiss Calibration Service

Accredited by the Swiss Accreditation Service (SAS)
The Swiss Accreditation Service is one of the signatories to the EA Multilateral Agreement for the recognition of calibration certificates

Accreditation No.: SCS 0108

Client VGEL

Certificate No: D2450V2-854_May16

CALIBRATION CERTIFICATE

Object	D2450V2 - SN:854
Calibration procedure(s)	QA CAL-05.v9 Calibration procedure for dipole validation kits above 700 MHz
Calibration date:	May 13, 2016

This calibration certificate documents the traceability to national standards, which realize the physical units of measurements (SI).
The measurements and the uncertainties with confidence probability are given on the following pages and are part of the certificate.

All calibrations have been conducted in the closed laboratory facility: environment temperature (22 ± 3)°C and humidity < 70%.

Calibration Equipment used (M&TE critical for calibration)

Primary Standards	ID #	Cal Date (Certificate No.)	Scheduled Calibration
Power meter NRP	SN: 104778	06-Apr-16 (No. 217-02288/02289)	Apr-17
Power sensor NRP-Z91	SN: 103244	06-Apr-16 (No. 217-02288)	Apr-17
Power sensor NRP-Z91	SN: 103245	06-Apr-16 (No. 217-02289)	Apr-17
Reference 20 dB Attenuator	SN: 5058 (20k)	05-Apr-16 (No. 217-02292)	Apr-17
Type-N mismatch combination	SN: 5047.2 / 06327	05-Apr-16 (No. 217-02295)	Apr-17
Reference Probe EX3DV4	SN: 7349	31-Dec-15 (No. EX3-7349_Dec15)	Dec-16
DAE4	SN: 601	30-Dec-15 (No. DAE4-601_Dec15)	Dec-16

Secondary Standards	ID #	Check Date (in house)	Scheduled Check
Power meter EPM-442A	SN: GB37480704	07-Oct-15 (No. 217-02222)	In house check: Oct-16
Power sensor HP 8481A	SN: US37292783	07-Oct-15 (No. 217-02222)	In house check: Oct-16
Power sensor HP 8481A	SN: MY41092317	07-Oct-15 (No. 217-02223)	In house check: Oct-16
RF generator R&S SMT-06	SN: 100972	15-Jun-15 (in house check Jun-15)	In house check: Oct-16
Network Analyzer HP 8753E	SN: US37390585	18-Oct-01 (in house check Oct-15)	In house check: Oct-16

	Name	Function	Signature
Calibrated by:	Jeton Kastrati	Laboratory Technician	
Approved by:	Katja Pokovic	Technical Manager	

Issued: May 18, 2016

This calibration certificate shall not be reproduced except in full without written approval of the laboratory.

Calibration Laboratory of
Schmid & Partner
Engineering AG
Zeughausstrasse 43, 8004 Zurich, Switzerland

S Schweizerischer Kalibrierdienst
C Service suisse d'étalonnage
Servizio svizzero di taratura
S Swiss Calibration Service

Accredited by the Swiss Accreditation Service (SAS)
The Swiss Accreditation Service is one of the signatories to the EA Multilateral Agreement for the recognition of calibration certificates

Accreditation No.: SCS 0108

Glossary:

TSL	tissue simulating liquid
ConvF	sensitivity in TSL / NORM x,y,z
N/A	not applicable or not measured

Calibration is Performed According to the Following Standards:

a) IEEE Std 1528-2013, "IEEE Recommended Practice for Determining the Peak Spatial-Averaged Specific Absorption Rate (SAR) in the Human Head from Wireless Communications Devices: Measurement Techniques", June 2013
b) IEC 62209-1, "Procedure to measure the Specific Absorption Rate (SAR) for hand-held devices used in close proximity to the ear (frequency range of 300 MHz to 3 GHz)", February 2005
c) IEC 62209-2, "Procedure to determine the Specific Absorption Rate (SAR) for wireless communication devices used in close proximity to the human body (frequency range of 30 MHz to 6 GHz)", March 2010
d) KDB 865664, "SAR Measurement Requirements for 100 MHz to 6 GHz"

Additional Documentation:

e) DASY4/5 System Handbook

Methods Applied and Interpretation of Parameters:

- *Measurement Conditions:* Further details are available from the Validation Report at the end of the certificate. All figures stated in the certificate are valid at the frequency indicated.
- *Antenna Parameters with TSL:* The dipole is mounted with the spacer to position its feed point exactly below the center marking of the flat phantom section, with the arms oriented parallel to the body axis.
- *Feed Point Impedance and Return Loss:* These parameters are measured with the dipole positioned under the liquid filled phantom. The impedance stated is transformed from the measurement at the SMA connector to the feed point. The Return Loss ensures low reflected power. No uncertainty required.
- *Electrical Delay:* One-way delay between the SMA connector and the antenna feed point. No uncertainty required.
- *SAR measured:* SAR measured at the stated antenna input power.
- *SAR normalized:* SAR as measured, normalized to an input power of 1 W at the antenna connector.
- *SAR for nominal TSL parameters:* The measured TSL parameters are used to calculate the nominal SAR result.

The reported uncertainty of measurement is stated as the standard uncertainty of measurement multiplied by the coverage factor k=2, which for a normal distribution corresponds to a coverage probability of approximately 95%.

Measurement Conditions

DASY system configuration, as far as not given on page 1.

DASY Version	DASY5	V52.8.8
Extrapolation	Advanced Extrapolation	
Phantom	Modular Flat Phantom	
Distance Dipole Center - TSL	10 mm	with Spacer
Zoom Scan Resolution	dx, dy, dz = 5 mm	
Frequency	2450 MHz ± 1 MHz	

Head TSL parameters

The following parameters and calculations were applied.

	Temperature	Permittivity	Conductivity
Nominal Head TSL parameters	22.0 °C	39.2	1.80 mho/m
Measured Head TSL parameters	(22.0 ± 0.2) °C	38.6 ± 6 %	1.87 mho/m ± 6 %
Head TSL temperature change during test	< 0.5 °C	----	----

SAR result with Head TSL

SAR averaged over 1 cm^3 (1 g) of Head TSL	Condition	
SAR measured	250 mW input power	12.9 W/kg
SAR for nominal Head TSL parameters	normalized to 1W	**50.5 W/kg ± 17.0 % (k=2)**

SAR averaged over 10 cm^3 (10 g) of Head TSL	condition	
SAR measured	250 mW input power	5.98 W/kg
SAR for nominal Head TSL parameters	normalized to 1W	**23.6 W/kg ± 16.5 % (k=2)**

Body TSL parameters

The following parameters and calculations were applied.

	Temperature	Permittivity	Conductivity
Nominal Body TSL parameters	22.0 °C	52.7	1.95 mho/m
Measured Body TSL parameters	(22.0 ± 0.2) °C	52.6 ± 6 %	2.02 mho/m ± 6 %
Body TSL temperature change during test	< 0.5 °C	----	----

SAR result with Body TSL

SAR averaged over 1 cm^3 (1 g) of Body TSL	Condition	
SAR measured	250 mW input power	12.7 W/kg
SAR for nominal Body TSL parameters	normalized to 1W	**49.9 W/kg ± 17.0 % (k=2)**

SAR averaged over 10 cm^3 (10 g) of Body TSL	condition	
SAR measured	250 mW input power	5.93 W/kg
SAR for nominal Body TSL parameters	normalized to 1W	**23.5 W/kg ± 16.5 % (k=2)**

UL Japan, Inc.
Ise EMC Lab.
4383-326 Asama-cho, Ise-shi, Mie-ken 516-0021 JAPAN
Telephone: +81 596 24 8999
Facsimile: +81 596 24 8124

Appendix (Additional assessments outside the scope of SCS 0108)

Antenna Parameters with Head TSL

Impedance, transformed to feed point	52.4 Ω + 4.6 jΩ
Return Loss	- 25.8 dB

Antenna Parameters with Body TSL

Impedance, transformed to feed point	48.1 Ω + 6.3 jΩ
Return Loss	- 23.5 dB

General Antenna Parameters and Design

Electrical Delay (one direction)	1.159 ns

After long term use with 100W radiated power, only a slight warming of the dipole near the feedpoint can be measured.

The dipole is made of standard semirigid coaxial cable. The center conductor of the feeding line is directly connected to the second arm of the dipole. The antenna is therefore short-circuited for DC-signals. On some of the dipoles, small end caps are added to the dipole arms in order to improve matching when loaded according to the position as explained in the "Measurement Conditions" paragraph. The SAR data are not affected by this change. The overall dipole length is still according to the Standard.
No excessive force must be applied to the dipole arms, because they might bend or the soldered connections near the feedpoint may be damaged.

Additional EUT Data

Manufactured by	SPEAG
Manufactured on	November 10, 2009

DASY5 Validation Report for Head TSL

Date: 13.05.2016

Test Laboratory: SPEAG, Zurich, Switzerland

DUT: Dipole 2450 MHz; Type: D2450V2; Serial: D2450V2 - SN:854

Communication System: UID 0 - CW; Frequency: 2450 MHz
Medium parameters used: f = 2450 MHz; σ = 1.87 S/m; ε_r = 38.6; ρ = 1000 kg/m^3
Phantom section: Flat Section
Measurement Standard: DASY5 (IEEE/IEC/ANSI C63.19-2011)

DASY52 Configuration:

- Probe: EX3DV4 - SN7349; ConvF(7.76, 7.76, 7.76); Calibrated: 31.12.2015;
- Sensor-Surface: 1.4mm (Mechanical Surface Detection)
- Electronics: DAE4 Sn601; Calibrated: 30.12.2015
- Phantom: Flat Phantom 5.0 (front); Type: QD000P50AA; Serial: 1001
- DASY52 52.8.8(1258); SEMCAD X 14.6.10(7372)

Dipole Calibration for Head Tissue/Pin=250 mW, d=10mm/Zoom Scan (7x7x7)/Cube 0:

Measurement grid: dx=5mm, dy=5mm, dz=5mm
Reference Value = 111.7 V/m; Power Drift = 0.04 dB
Peak SAR (extrapolated) = 26.1 W/kg
SAR(1 g) = 12.9 W/kg; SAR(10 g) = 5.98 W/kg
Maximum value of SAR (measured) = 21.1 W/kg

0 dB = 21.1 W/kg = 13.24 dBW/kg

Impedance Measurement Plot for Head TSL

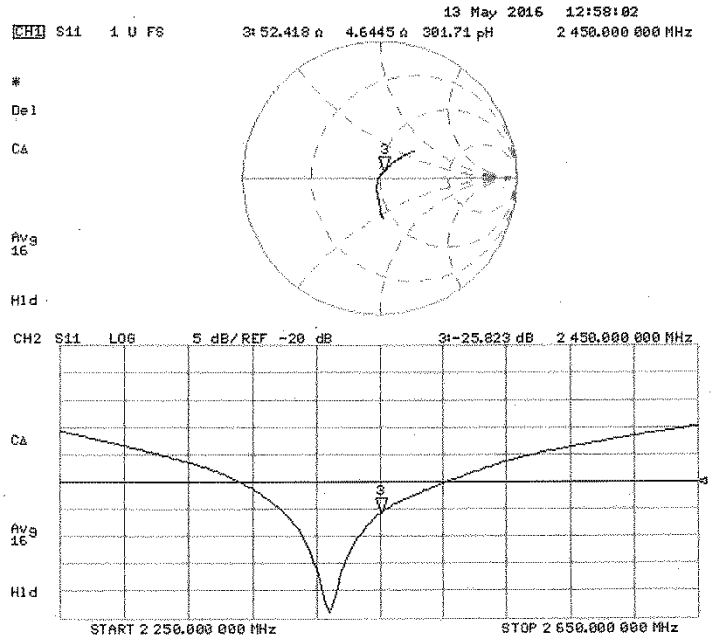

DASY5 Validation Report for Body TSL

Date: 04.05.2016

Test Laboratory: SPEAG, Zurich, Switzerland

DUT: Dipole 2450 MHz; Type: D2450V2; Serial: D2450V2 - SN:854

Communication System: UID 0 - CW; Frequency: 2450 MHz
Medium parameters used: f = 2450 MHz; σ = 2.02 S/m; ε_r = 52.6; ρ = 1000 kg/m^3
Phantom section: Flat Section
Measurement Standard: DASY5 (IEEE/IEC/ANSI C63.19-2011)

DASY52 Configuration:

- Probe: EX3DV4 - SN7349; ConvF(7.79, 7.79, 7.79); Calibrated: 31.12.2015;
- Sensor-Surface: 1.4mm (Mechanical Surface Detection)
- Electronics: DAE4 Sn601; Calibrated: 30.12.2015
- Phantom: Flat Phantom 5.0 (back); Type: QD000P50AA; Serial: 1002
- DASY52 52.8.8(1258); SEMCAD X 14.6.10(7372)

Dipole Calibration for Body Tissue/Pin=250 mW, d=10mm/Zoom Scan (7x7x7)/Cube 0:

Measurement grid: dx=5mm, dy=5mm, dz=5mm
Reference Value = 105.3 V/m; Power Drift = 0.01 dB
Peak SAR (extrapolated) = 25.4 W/kg
SAR(1 g) = 12.7 W/kg; SAR(10 g) = 5.93 W/kg
Maximum value of SAR (measured) = 20.6 W/kg

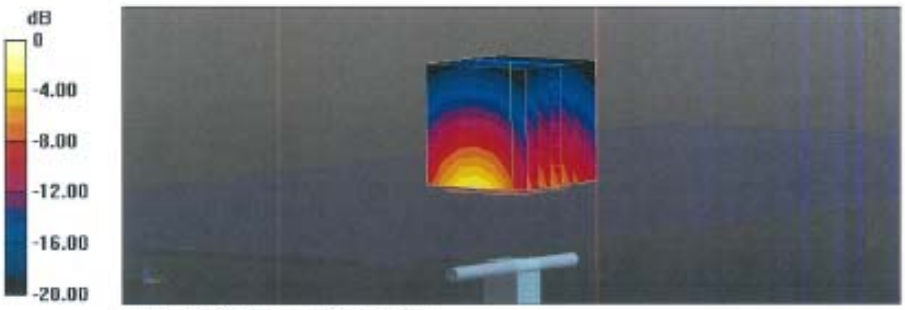

0 dB = 20.6 W/kg = 13.14 dBW/kg

Impedance Measurement Plot for Body TSL

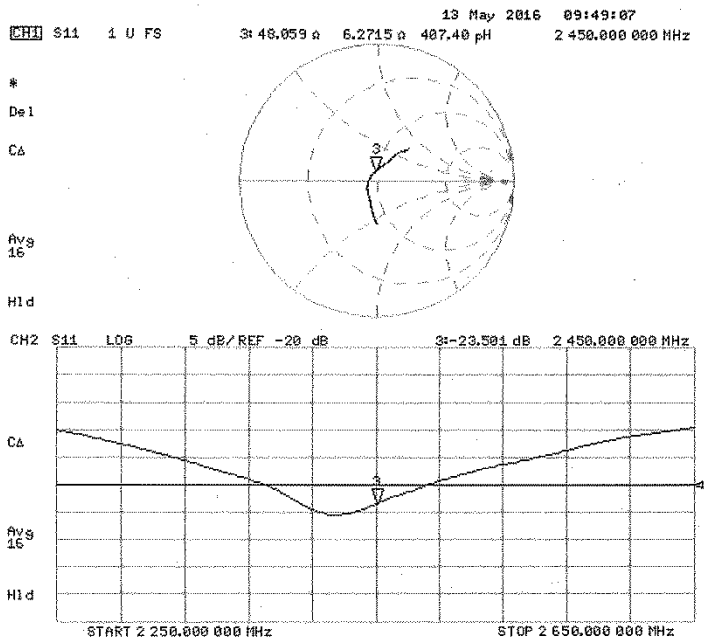

System Check Dipole SAR Calibration Certificate -Dipole 5GHz(D5GHzV2,S/N:1020)

Calibration Laboratory of
Schmid & Partner
Engineering AG
Zeughausstrasse 43, 8004 Zurich, Switzerland

S Schweizerischer Kalibrierdienst
C Service suisse d'étalonnage
Servizio svizzero di taratura
S Swiss Calibration Service

Accredited by the Swiss Accreditation Service (SAS)
The Swiss Accreditation Service is one of the signatories to the EA Multilateral Agreement for the recognition of calibration certificates

Accreditation No.: SCS 0108

Client UL Japan HQ (Vitec)

Certificate No: D5GHzV2-1020_Jan16

CALIBRATION CERTIFICATE

Object	D5GHzV2 - SN: 1020
Calibration procedure(s)	QA CAL-22.v2 Calibration procedure for dipole validation kits between 3-6 GHz
Calibration date:	January 20, 2016

This calibration certificate documents the traceability to national standards, which realize the physical units of measurements (SI).
The measurements and the uncertainties with confidence probability are given on the following pages and are part of the certificate.

All calibrations have been conducted in the closed laboratory facility: environment temperature (22 ± 3)°C and humidity < 70%.

Calibration Equipment used (M&TE critical for calibration)

Primary Standards	ID #	Cal Date (Certificate No.)	Scheduled Calibration
Power meter EPM-442A	GB37480704	07-Oct-15 (No. 217-02222)	Oct-16
Power sensor HP 8481A	US37292783	07-Oct-15 (No. 217-02222)	Oct-16
Power sensor HP 8481A	MY41092317	07-Oct-15 (No. 217-02223)	Oct-16
Reference 20 dB Attenuator	SN: 5058 (20k)	01-Apr-15 (No. 217-02131)	Mar-16
Type-N mismatch combination	SN: 5047.2 / 06327	01-Apr-15 (No. 217-02134)	Mar-16
Reference Probe EX3DV4	SN: 3503	31-Dec-15 (No. EX3-3503_Dec15)	Dec-16
DAE4	SN: 601	30-Dec-15 (No. DAE4-601_Dec15)	Dec-16

Secondary Standards	ID #	Check Date (in house)	Scheduled Check
RF generator R&S SMT-06	100972	15-Jun-15 (in house check Jun-15)	In house check: Jun-18
Network Analyzer HP 8753E	US37390585 S4206	18-Oct-01 (in house check Oct-15)	In house check: Oct-16

	Name	Function	Signature
Calibrated by:	Jeton Kastrati	Laboratory Technician	
Approved by:	Katja Pokovic	Technical Manager	

Issued: January 20, 2016

This calibration certificate shall not be reproduced except in full without written approval of the laboratory.

Calibration Laboratory of
Schmid & Partner
Engineering AG
Zeughausstrasse 43, 8004 Zurich, Switzerland

S Schweizerischer Kalibrierdienst
C Service suisse d'étalonnage
Servizio svizzero di taratura
S Swiss Calibration Service

Accredited by the Swiss Accreditation Service (SAS)
The Swiss Accreditation Service is one of the signatories to the EA Multilateral Agreement for the recognition of calibration certificates

Accreditation No.: SCS 0108

Glossary:

TSL	tissue simulating liquid
ConvF	sensitivity in TSL / NORM x,y,z
N/A	not applicable or not measured

Calibration is Performed According to the Following Standards:

a) IEEE Std 1528-2013, "IEEE Recommended Practice for Determining the Peak Spatial-Averaged Specific Absorption Rate (SAR) in the Human Head from Wireless Communications Devices: Measurement Techniques", June 2013
b) IEC 62209-2, "Procedure to determine the Specific Absorption Rate (SAR) for wireless communication devices used in close proximity to the human body (frequency range of 30 MHz to 6 GHz)", March 2010
c) KDB 865664, "SAR Measurement Requirements for 100 MHz to 6 GHz"

Additional Documentation:

d) DASY4/5 System Handbook

Methods Applied and Interpretation of Parameters:

- *Measurement Conditions:* Further details are available from the Validation Report at the end of the certificate. All figures stated in the certificate are valid at the frequency indicated.
- *Antenna Parameters with TSL:* The dipole is mounted with the spacer to position its feed point exactly below the center marking of the flat phantom section, with the arms oriented parallel to the body axis.
- *Feed Point Impedance and Return Loss:* These parameters are measured with the dipole positioned under the liquid filled phantom. The impedance stated is transformed from the measurement at the SMA connector to the feed point. The Return Loss ensures low reflected power. No uncertainty required.
- *Electrical Delay:* One-way delay between the SMA connector and the antenna feed point. No uncertainty required.
- *SAR measured:* SAR measured at the stated antenna input power.
- *SAR normalized:* SAR as measured, normalized to an input power of 1 W at the antenna connector.
- *SAR for nominal TSL parameters:* The measured TSL parameters are used to calculate the nominal SAR result.

The reported uncertainty of measurement is stated as the standard uncertainty of measurement multiplied by the coverage factor k=2, which for a normal distribution corresponds to a coverage probability of approximately 95%.

Measurement Conditions

DASY system configuration, as far as not given on page 1.

DASY Version	DASY5	V52.8.8
Extrapolation	Advanced Extrapolation	
Phantom	Modular Flat Phantom V5.0	
Distance Dipole Center - TSL	10 mm	with Spacer
Zoom Scan Resolution	dx, dy = 4.0 mm, dz = 1.4 mm	Graded Ratio = 1.4 (Z direction)
Frequency	5200 MHz ± 1 MHz 5250 MHz ± 1 MHz 5300 MHz ± 1 MHz 5500 MHz ± 1 MHz 5600 MHz ± 1 MHz 5750 MHz ± 1 MHz 5800 MHz ± 1 MHz	

Head TSL parameters at 5200 MHz

The following parameters and calculations were applied.

	Temperature	Permittivity	Conductivity
Nominal Head TSL parameters	22.0 °C	36.0	4.66 mho/m
Measured Head TSL parameters	(22.0 ± 0.2) °C	35.2 ± 6 %	4.51 mho/m ± 6 %
Head TSL temperature change during test	< 0.5 °C	----	----

SAR result with Head TSL at 5200 MHz

SAR averaged over 1 cm³ (1 g) of Head TSL	Condition	
SAR measured	100 mW input power	7.79 W/kg
SAR for nominal Head TSL parameters	normalized to 1W	**77.5 W/kg ± 19.9 % (k=2)**

SAR averaged over 10 cm³ (10 g) of Head TSL	condition	
SAR measured	100 mW input power	2.25 W/kg
SAR for nominal Head TSL parameters	normalized to 1W	**22.3 W/kg ± 19.5 % (k=2)**

Head TSL parameters at 5250 MHz

The following parameters and calculations were applied.

	Temperature	Permittivity	Conductivity
Nominal Head TSL parameters	22.0 °C	35.9	4.71 mho/m
Measured Head TSL parameters	(22.0 ± 0.2) °C	35.2 ± 6 %	4.55 mho/m ± 6 %
Head TSL temperature change during test	< 0.5 °C	----	----

SAR result with Head TSL at 5250 MHz

SAR averaged over 1 cm^3 (1 g) of Head TSL	Condition	
SAR measured	100 mW input power	8.00 W/kg
SAR for nominal Head TSL parameters	normalized to 1W	79.6 W/kg ± 19.9 % (k=2)

SAR averaged over 10 cm^3 (10 g) of Head TSL	condition	
SAR measured	100 mW input power	2.31 W/kg
SAR for nominal Head TSL parameters	normalized to 1W	22.9 W/kg ± 19.5 % (k=2)

Head TSL parameters at 5300 MHz

The following parameters and calculations were applied.

	Temperature	Permittivity	Conductivity
Nominal Head TSL parameters	22.0 °C	35.9	4.76 mho/m
Measured Head TSL parameters	(22.0 ± 0.2) °C	35.1 ± 6 %	4.60 mho/m ± 6 %
Head TSL temperature change during test	< 0.5 °C	----	----

SAR result with Head TSL at 5300 MHz

SAR averaged over 1 cm^3 (1 g) of Head TSL	Condition	
SAR measured	100 mW input power	8.28 W/kg
SAR for nominal Head TSL parameters	normalized to 1W	82.3 W/kg ± 19.9 % (k=2)

SAR averaged over 10 cm^3 (10 g) of Head TSL	condition	
SAR measured	100 mW input power	2.39 W/kg
SAR for nominal Head TSL parameters	normalized to 1W	23.7 W/kg ± 19.5 % (k=2)

Head TSL parameters at 5500 MHz

The following parameters and calculations were applied.

	Temperature	Permittivity	Conductivity
Nominal Head TSL parameters	22.0 °C	35.6	4.96 mho/m
Measured Head TSL parameters	(22.0 ± 0.2) °C	34.8 ± 6 %	4.79 mho/m ± 6 %
Head TSL temperature change during test	< 0.5 °C	----	----

SAR result with Head TSL at 5500 MHz

SAR averaged over 1 cm^3 (1 g) of Head TSL	Condition	
SAR measured	100 mW input power	8.10 W/kg
SAR for nominal Head TSL parameters	normalized to 1W	**80.5 W/kg ± 19.9 % (k=2)**

SAR averaged over 10 cm^3 (10 g) of Head TSL	condition	
SAR measured	100 mW input power	2.32 W/kg
SAR for nominal Head TSL parameters	normalized to 1W	**23.0 W/kg ± 19.5 % (k=2)**

Head TSL parameters at 5600 MHz

The following parameters and calculations were applied.

	Temperature	Permittivity	Conductivity
Nominal Head TSL parameters	22.0 °C	35.5	5.07 mho/m
Measured Head TSL parameters	(22.0 ± 0.2) °C	34.7 ± 6 %	4.90 mho/m ± 6 %
Head TSL temperature change during test	< 0.5 °C	----	----

SAR result with Head TSL at 5600 MHz

SAR averaged over 1 cm^3 (1 g) of Head TSL	Condition	
SAR measured	100 mW input power	8.42 W/kg
SAR for nominal Head TSL parameters	normalized to 1W	**83.7 W/kg ± 19.9 % (k=2)**

SAR averaged over 10 cm^3 (10 g) of Head TSL	condition	
SAR measured	100 mW input power	2.43 W/kg
SAR for nominal Head TSL parameters	normalized to 1W	**24.1 W/kg ± 19.5 % (k=2)**

Head TSL parameters at 5750 MHz

The following parameters and calculations were applied.

	Temperature	Permittivity	Conductivity
Nominal Head TSL parameters	22.0 °C	35.4	5.22 mho/m
Measured Head TSL parameters	(22.0 ± 0.2) °C	34.5 ± 6 %	5.05 mho/m ± 6 %
Head TSL temperature change during test	< 0.5 °C	----	----

SAR result with Head TSL at 5750 MHz

SAR averaged over 1 cm^3 (1 g) of Head TSL	Condition	
SAR measured	100 mW input power	7.96 W/kg
SAR for nominal Head TSL parameters	normalized to 1W	79.1 W/kg ± 19.9 % (k=2)

SAR averaged over 10 cm^3 (10 g) of Head TSL	condition	
SAR measured	100 mW input power	2.28 W/kg
SAR for nominal Head TSL parameters	normalized to 1W	22.6 W/kg ± 19.5 % (k=2)

Head TSL parameters at 5800 MHz

The following parameters and calculations were applied.

	Temperature	Permittivity	Conductivity
Nominal Head TSL parameters	22.0 °C	35.3	5.27 mho/m
Measured Head TSL parameters	(22.0 ± 0.2) °C	34.4 ± 6 %	5.10 mho/m ± 6 %
Head TSL temperature change during test	< 0.5 °C	----	----

SAR result with Head TSL at 5800 MHz

SAR averaged over 1 cm^3 (1 g) of Head TSL	Condition	
SAR measured	100 mW input power	7.99 W/kg
SAR for nominal Head TSL parameters	normalized to 1W	79.4 W/kg ± 19.9 % (k=2)

SAR averaged over 10 cm^3 (10 g) of Head TSL	condition	
SAR measured	100 mW input power	2.29 W/kg
SAR for nominal Head TSL parameters	normalized to 1W	22.7 W/kg ± 19.5 % (k=2)

Body TSL parameters at 5250 MHz

The following parameters and calculations were applied.

	Temperature	Permittivity	Conductivity
Nominal Body TSL parameters	22.0 °C	48.9	5.36 mho/m
Measured Body TSL parameters	(22.0 ± 0.2) °C	47.0 ± 6 %	5.44 mho/m ± 6 %
Body TSL temperature change during test	< 0.5 °C	----	----

SAR result with Body TSL at 5250 MHz

SAR averaged over 1 cm^3 (1 g) of Body TSL	Condition	
SAR measured	100 mW input power	7.36 W/kg
SAR for nominal Body TSL parameters	normalized to 1W	**73.0 W/kg ± 19.9 % (k=2)**

SAR averaged over 10 cm^3 (10 g) of Body TSL	condition	
SAR measured	100 mW input power	2.09 W/kg
SAR for nominal Body TSL parameters	normalized to 1W	**20.7 W/kg ± 19.5 % (k=2)**

Body TSL parameters at 5600 MHz

The following parameters and calculations were applied.

	Temperature	Permittivity	Conductivity
Nominal Body TSL parameters	22.0 °C	48.5	5.77 mho/m
Measured Body TSL parameters	(22.0 ± 0.2) °C	46.4 ± 6 %	5.91 mho/m ± 6 %
Body TSL temperature change during test	< 0.5 °C	----	----

SAR result with Body TSL at 5600 MHz

SAR averaged over 1 cm^3 (1 g) of Body TSL	Condition	
SAR measured	100 mW input power	7.82 W/kg
SAR for nominal Body TSL parameters	normalized to 1W	**77.6 W/kg ± 19.9 % (k=2)**

SAR averaged over 10 cm^3 (10 g) of Body TSL	condition	
SAR measured	100 mW input power	2.21 W/kg
SAR for nominal Body TSL parameters	normalized to 1W	**21.9 W/kg ± 19.5 % (k=2)**

Body TSL parameters at 5750 MHz

The following parameters and calculations were applied.

	Temperature	Permittivity	Conductivity
Nominal Body TSL parameters	22.0 °C	48.3	5.94 mho/m
Measured Body TSL parameters	(22.0 ± 0.2) °C	46.1 ± 6 %	6.12 mho/m ± 6 %
Body TSL temperature change during test	< 0.5 °C	----	----

SAR result with Body TSL at 5750 MHz

SAR averaged over 1 cm^3 (1 g) of Body TSL	Condition	
SAR measured	100 mW input power	7.39 W/kg
SAR for nominal Body TSL parameters	normalized to 1W	73.3 W/kg ± 19.9 % (k=2)

SAR averaged over 10 cm^3 (10 g) of Body TSL	condition	
SAR measured	100 mW input power	2.07 W/kg
SAR for nominal Body TSL parameters	normalized to 1W	20.5 W/kg ± 19.5 % (k=2)

Appendix (Additional assessments outside the scope of SCS 0108)

Antenna Parameters with Head TSL at 5200 MHz

Impedance, transformed to feed point	49.4 Ω - 9.7 jΩ
Return Loss	- 20.2 dB

Antenna Parameters with Head TSL at 5250 MHz

Impedance, transformed to feed point	49.4 Ω - 5.7 jΩ
Return Loss	- 24.7 dB

Antenna Parameters with Head TSL at 5300 MHz

Impedance, transformed to feed point	51.7 Ω - 3.6 jΩ
Return Loss	- 28.3 dB

Antenna Parameters with Head TSL at 5500 MHz

Impedance, transformed to feed point	49.2 Ω - 1.5 jΩ
Return Loss	- 35.0 dB

Antenna Parameters with Head TSL at 5600 MHz

Impedance, transformed to feed point	54.8 Ω - 3.3 jΩ
Return Loss	- 25.1 dB

Antenna Parameters with Head TSL at 5750 MHz

Impedance, transformed to feed point	57.5 Ω + 0.3 jΩ
Return Loss	- 23.1 dB

Antenna Parameters with Head TSL at 5800 MHz

Impedance, transformed to feed point	56.0 Ω + 0.1 jΩ
Return Loss	- 25.0 dB

Antenna Parameters with Body TSL at 5250 MHz

Impedance, transformed to feed point	51.8 Ω - 5.2 jΩ
Return Loss	- 25.4 dB

Antenna Parameters with Body TSL at 5600 MHz

Impedance, transformed to feed point	54.4 Ω - 1.6 jΩ
Return Loss	- 26.9 dB

Antenna Parameters with Body TSL at 5750 MHz

Impedance, transformed to feed point	58.8 Ω + 0.9 jΩ
Return Loss	- 21.8 dB

General Antenna Parameters and Design

Electrical Delay (one direction)	1.199 ns

After long term use with 100W radiated power, only a slight warming of the dipole near the feedpoint can be measured.

The dipole is made of standard semirigid coaxial cable. The center conductor of the feeding line is directly connected to the second arm of the dipole. The antenna is therefore short-circuited for DC-signals. On some of the dipoles, small end caps are added to the dipole arms in order to improve matching when loaded according to the position as explained in the "Measurement Conditions" paragraph. The SAR data are not affected by this change. The overall dipole length is still according to the Standard.
No excessive force must be applied to the dipole arms, because they might bend or the soldered connections near the feedpoint may be damaged.

Additional EUT Data

Manufactured by	SPEAG
Manufactured on	February 05, 2004

DASY5 Validation Report for Head TSL

Date: 20.01.2016

Test Laboratory: SPEAG, Zurich, Switzerland

DUT: Dipole D5GHzV2; Type: D5GHzV2; Serial: D5GHzV2 - SN: 1020

Communication System: UID 0 - CW; Frequency: 5200 MHz, Frequency: 5250 MHz, Frequency: 5300 MHz, Frequency: 5500 MHz, Frequency: 5600 MHz, Frequency: 5750 MHz, Frequency: 5800 MHz
Medium parameters used: f = 5200 MHz; σ = 4.51 S/m; ε_r = 35.2; ρ = 1000 kg/m^3 , Medium parameters used: f = 5250 MHz; σ = 4.55 S/m; ε_r = 35.2; ρ = 1000 kg/m^3 , Medium parameters used: f = 5300 MHz; σ = 4.6 S/m; ε_r = 35.1; ρ = 1000 kg/m^3 , Medium parameters used: f = 5500 MHz; σ = 4.79 S/m; ε_r = 34.8; ρ = 1000 kg/m^3 , Medium parameters used: f = 5600 MHz; σ = 4.9 S/m; ε_r = 34.7; ρ = 1000 kg/m^3 , Medium parameters used: f = 5750 MHz; σ = 5.05 S/m; ε_r = 34.5; ρ = 1000 kg/m^3 , Medium parameters used: f = 5800 MHz; σ = 5.1 S/m; ε_r = 34.4; ρ = 1000 kg/m^3
Phantom section: Flat Section
Measurement Standard: DASY5 (IEEE/IEC/ANSI C63.19-2011)

DASY52 Configuration:

- Probe: EX3DV4 - SN3503; ConvF(5.59, 5.59, 5.59); Calibrated: 31.12.2015, ConvF(5.53, 5.53, 5.53); Calibrated: 31.12.2015, ConvF(5.25, 5.25, 5.25); Calibrated: 31.12.2015, ConvF(5.18, 5.18, 5.18); Calibrated: 31.12.2015, ConvF(4.99, 4.99, 4.99); Calibrated: 31.12.2015, ConvF(4.95, 4.95, 4.95); Calibrated: 31.12.2015; ConvF(4.95, 4.95, 4.95); Calibrated: 31.12.2015;
- Sensor-Surface: 1.4mm (Mechanical Surface Detection)
- Electronics: DAE4 Sn601; Calibrated: 30.12.2015
- Phantom: Flat Phantom 5.0 (front); Type: QD000P50AA; Serial: 1001
- DASY52 52.8.8(1258); SEMCAD X 14.6.10(7372)

Dipole Calibration for Head Tissue 2/Pin=100mW, dist=10mm, f=5200 MHz/Zoom Scan, dist=1.4mm (8x8x7)/Cube 0: Measurement grid: dx=4mm, dy=4mm, dz=1.4mm
Reference Value = 72.07 V/m; Power Drift = 0.01 dB
Peak SAR (extrapolated) = 28.1 W/kg
SAR(1 g) = 7.79 W/kg; SAR(10 g) = 2.25 W/kg
Maximum value of SAR (measured) = 18.2 W/kg

Dipole Calibration for Head Tissue 2/Pin=100mW, dist=10mm, f=5250 MHz/Zoom Scan, dist=1.4mm (8x8x7)/Cube 0: Measurement grid: dx=4mm, dy=4mm, dz=1.4mm
Reference Value = 72.72 V/m; Power Drift = 0.06 dB
Peak SAR (extrapolated) = 29.2 W/kg
SAR(1 g) = 8 W/kg; SAR(10 g) = 2.31 W/kg
Maximum value of SAR (measured) = 18.7 W/kg

Dipole Calibration for Head Tissue 2/Pin=100mW, dist=10mm, f=5300 MHz/Zoom Scan, dist=1.4mm (8x8x7)/Cube 0: Measurement grid: dx=4mm, dy=4mm, dz=1.4mm
Reference Value = 73.60 V/m; Power Drift = 0.09 dB
Peak SAR (extrapolated) = 31.2 W/kg
SAR(1 g) = 8.28 W/kg; SAR(10 g) = 2.39 W/kg
Maximum value of SAR (measured) = 19.6 W/kg

Dipole Calibration for Head Tissue 2/Pin=100mW, dist=10mm, f=5500 MHz/Zoom Scan, dist=1.4mm (8x8x7)/Cube 0: Measurement grid: dx=4mm, dy=4mm, dz=1.4mm
Reference Value = 72.02 V/m; Power Drift = 0.06 dB
Peak SAR (extrapolated) = 32.0 W/kg
SAR(1 g) = 8.1 W/kg; SAR(10 g) = 2.32 W/kg
Maximum value of SAR (measured) = 19.7 W/kg

Dipole Calibration for Head Tissue 2/Pin=100mW, dist=10mm, f=5600 MHz/Zoom Scan, dist=1.4mm (8x8x7)/Cube 0: Measurement grid: dx=4mm, dy=4mm, dz=1.4mm
Reference Value = 72.66 V/m; Power Drift = 0.02 dB
Peak SAR (extrapolated) = 32.9 W/kg
SAR(1 g) = 8.42 W/kg; SAR(10 g) = 2.43 W/kg
Maximum value of SAR (measured) = 20.5 W/kg

Dipole Calibration for Head Tissue 2/Pin=100mW, dist=10mm, f=5750 MHz/Zoom Scan, dist=1.4mm (8x8x7)/Cube 0: Measurement grid: dx=4mm, dy=4mm, dz=1.4mm
Reference Value = 70.61 V/m; Power Drift = 0.05 dB
Peak SAR (extrapolated) = 32.4 W/kg
SAR(1 g) = 7.96 W/kg; SAR(10 g) = 2.28 W/kg
Maximum value of SAR (measured) = 19.5 W/kg

Dipole Calibration for Head Tissue 2/Pin=100mW, dist=10mm, f=5800 MHz/Zoom Scan, dist=1.4mm (8x8x7)/Cube 0: Measurement grid: dx=4mm, dy=4mm, dz=1.4mm
Reference Value = 70.21 V/m; Power Drift = 0.07 dB
Peak SAR (extrapolated) = 32.7 W/kg
SAR(1 g) = 7.99 W/kg; SAR(10 g) = 2.29 W/kg
Maximum value of SAR (measured) = 19.8 W/kg

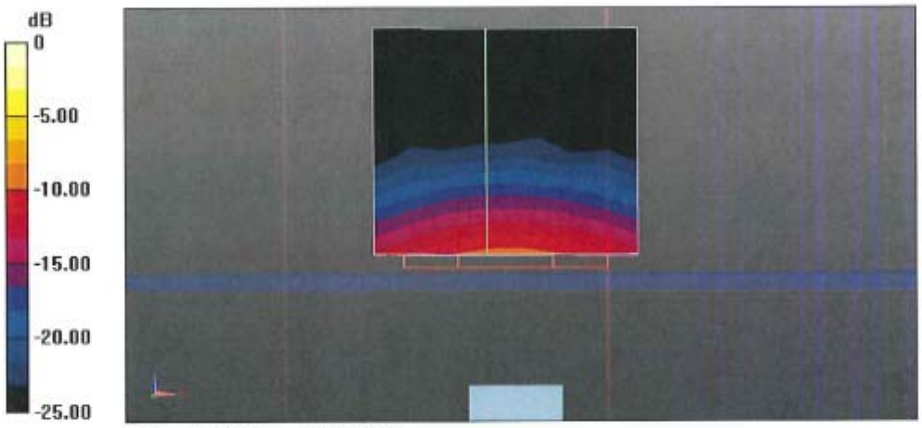

0 dB = 18.2 W/kg = 12.60 dBW/kg

Impedance Measurement Plot for Head TSL (5200, 5300, 5600, 5800)

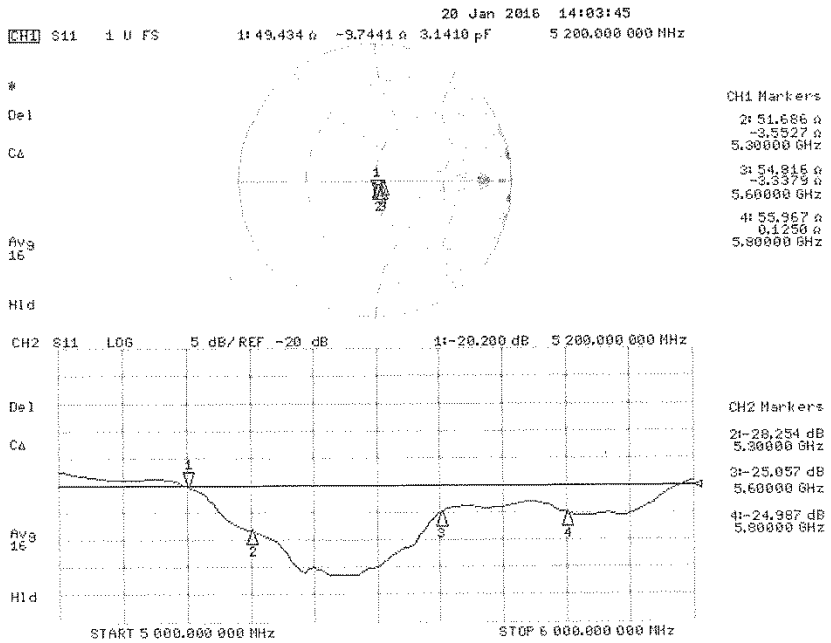

Impedance Measurement Plot for Head TSL (5250, 5500, 5750)

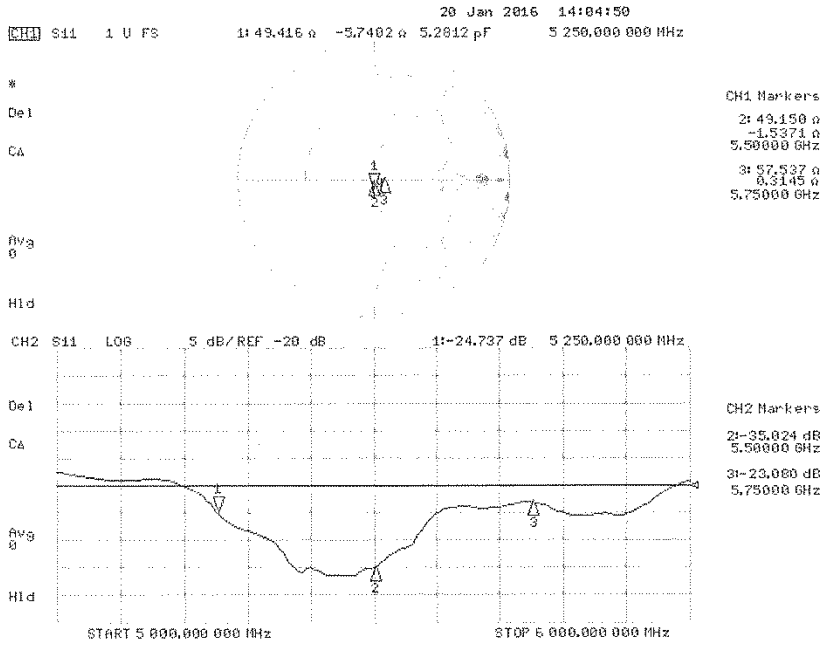

DASY5 Validation Report for Body TSL

Date: 13.01.2016

Test Laboratory: SPEAG, Zurich, Switzerland

DUT: Dipole 5GHz; Type: D5GHzV2; Serial: D5GHzV2 - SN: 1020

Communication System: UID 0 - CW; Frequency: 5250 MHz, Frequency: 5600 MHz, Frequency: 5750 MHz
Medium parameters used: f = 5250 MHz; σ = 5.44 S/m; ε_r = 47; ρ = 1000 kg/m^3 , Medium parameters used: f = 5600 MHz; σ = 5.91 S/m; ε_r = 46.4; ρ = 1000 kg/m^3 , Medium parameters used: f = 5750 MHz; σ = 6.12 S/m; ε_r = 46.1; ρ = 1000 kg/m^3
Phantom section: Flat Section
Measurement Standard: DASY5 (IEEE/IEC/ANSI C63.19-2011)

DASY52 Configuration:

- Probe: EX3DV4 - SN3503; ConvF(4.85, 4.85, 4.85); Calibrated: 31.12.2015, ConvF(4.35, 4.35, 4.35); Calibrated: 31.12.2015, ConvF(4.3, 4.3, 4.3); Calibrated: 31.12.2015;
- Sensor-Surface: 1.4mm (Mechanical Surface Detection)
- Electronics: DAE4 Sn601; Calibrated: 30.12.2015
- Phantom: Flat Phantom 5.0 (back); Type: QD000P50AA; Serial: 1002
- DASY52 52.8.8(1258); SEMCAD X 14.6.10(7372)

Dipole Calibration for Body Tissue/Pin=100mW, dist=10mm, f=5250 MHz/Zoom Scan, dist=1.4mm (8x8x7)/Cube 0: Measurement grid: dx=4mm, dy=4mm, dz=1.4mm
Reference Value = 66.83 V/m; Power Drift = -0.04 dB
Peak SAR (extrapolated) = 27.5 W/kg
SAR(1 g) = 7.36 W/kg; SAR(10 g) = 2.09 W/kg
Maximum value of SAR (measured) = 17.4 W/kg

Dipole Calibration for Body Tissue/Pin=100mW, dist=10mm, f=5600 MHz/Zoom Scan, dist=1.4mm (8x8x7)/Cube 0: Measurement grid: dx=4mm, dy=4mm, dz=1.4mm
Reference Value = 67.07 V/m; Power Drift = -0.01 dB
Peak SAR (extrapolated) = 31.9 W/kg
SAR(1 g) = 7.82 W/kg; SAR(10 g) = 2.21 W/kg
Maximum value of SAR (measured) = 19.1 W/kg

Dipole Calibration for Body Tissue/Pin=100mW, dist=10mm, f=5750 MHz/Zoom Scan, dist=1.4mm (8x8x7)/Cube 0: Measurement grid: dx=4mm, dy=4mm, dz=1.4mm
Reference Value = 64.16 V/m; Power Drift = 0.01 dB
Peak SAR (extrapolated) = 31.5 W/kg
SAR(1 g) = 7.39 W/kg; SAR(10 g) = 2.07 W/kg
Maximum value of SAR (measured) = 18.3 W/kg

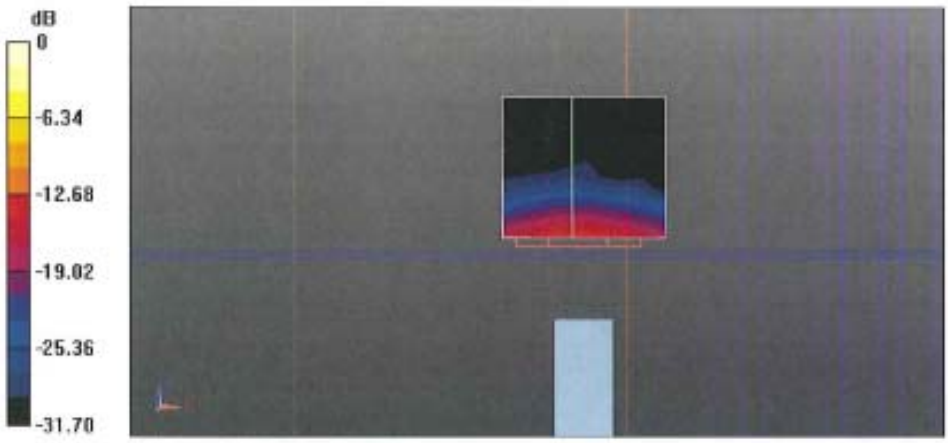

0 dB = 17.4 W/kg = 12.41 dBW/kg

Impedance Measurement Plot for Body TSL

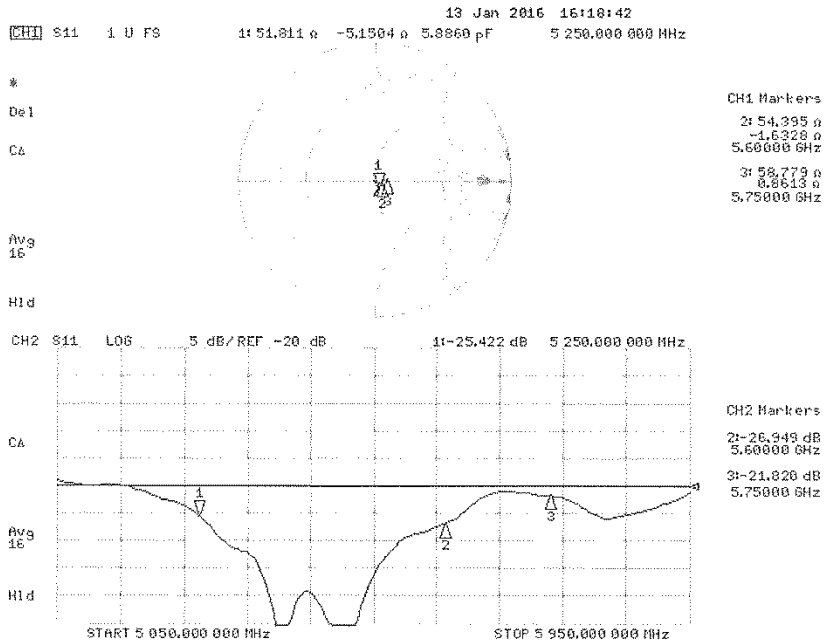

Dosimetric E-Field Probe Calibration Certificate (EX3DV4, S/N: 3745)

Calibration Laboratory of
Schmid & Partner
Engineering AG
Zeughausstrasse 43, 8004 Zurich, Switzerland

S Schweizerischer Kalibrierdienst
C Service suisse d'étalonnage
S Servizio svizzero di taratura
Swiss Calibration Service

Accredited by the Swiss Accreditation Service (SAS)
The Swiss Accreditation Service is one of the signatories to the EA Multilateral Agreement for the recognition of calibration certificates

Accreditation No.: SCS 0108

Client VGEL

Certificate No: EX3-3745_Apr16

CALIBRATION CERTIFICATE

Object	EX3DV4 - SN:3745
Calibration procedure(s)	QA CAL-01.v9, QA CAL-12.v9, QA CAL-14.v4, QA CAL-23.v5, QA CAL-25.v6 Calibration procedure for dosimetric E-field probes
Calibration date:	April 20, 2016

This calibration certificate documents the traceability to national standards, which realize the physical units of measurements (SI). The measurements and the uncertainties with confidence probability are given on the following pages and are part of the certificate.

All calibrations have been conducted in the closed laboratory facility: environment temperature (22 ± 3)°C and humidity < 70%.

Calibration Equipment used (M&TE critical for calibration)

Primary Standards	ID	Cal Date (Certificate No.)	Scheduled Calibration
Power meter NRP	SN: 104778	06-Apr-16 (No. 217-02288/02289)	Apr-17
Power sensor NRP-Z91	SN: 103244	06-Apr-16 (No. 217-02288)	Apr-17
Power sensor NRP-Z91	SN: 103245	06-Apr-16 (No. 217-02289)	Apr-17
Reference 20 dB Attenuator	SN: S5277 (20x)	05-Apr-16 (No. 217-02293)	Apr-17
Reference Probe ES3DV2	SN: 3013	31-Dec-15 (No. ES3-3013_Dec15)	Dec-16
DAE4	SN: 660	23-Dec-15 (No. DAE4-660_Dec15)	Dec-16
Secondary Standards	ID	Check Date (in house)	Scheduled Check
Power meter E4419B	SN: GB41293874	06-Apr-16 (No. 217-02285/02284)	In house check: Jun-16
Power sensor E4412A	SN: MY41498087	06-Apr-16 (No. 217-02285)	In house check: Jun-16
Power sensor E4412A	SN: 000110210	06-Apr-16 (No. 217-02284)	In house check: Jun-16
RF generator HP 8648C	SN: US3642U01700	04-Aug-99 (in house check Apr-13)	In house check: Jun-16
Network Analyzer HP 8753E	SN: US37390585	18-Oct-01 (in house check Oct-15)	In house check: Oct-16

	Name	Function	Signature
Calibrated by:	Claudio Leubler	Laboratory Technician	
Approved by:	Katja Pokovic	Technical Manager	

Issued: April 21, 2016

This calibration certificate shall not be reproduced except in full without written approval of the laboratory.

Calibration Laboratory of
Schmid & Partner
Engineering AG
Zeughausstrasse 43, 8004 Zurich, Switzerland

S Schweizerischer Kalibrierdienst
C Service suisse d'étalonnage
S Servizio svizzero di taratura
Swiss Calibration Service

Accredited by the Swiss Accreditation Service (SAS)
The Swiss Accreditation Service is one of the signatories to the EA Multilateral Agreement for the recognition of calibration certificates

Accreditation No.: SCS 0108

Glossary:

TSL	tissue simulating liquid
NORMx,y,z	sensitivity in free space
ConvF	sensitivity in TSL / NORMx,y,z
DCP	diode compression point
CF	crest factor (1/duty_cycle) of the RF signal
A, B, C, D	modulation dependent linearization parameters
Polarization φ	φ rotation around probe axis
Polarization ϑ	ϑ rotation around an axis that is in the plane normal to probe axis (at measurement center), i.e., ϑ = 0 is normal to probe axis
Connector Angle	information used in DASY system to align probe sensor X to the robot coordinate system

Calibration is Performed According to the Following Standards:

a) IEEE Std 1528-2013, "IEEE Recommended Practice for Determining the Peak Spatial-Averaged Specific Absorption Rate (SAR) in the Human Head from Wireless Communications Devices: Measurement Techniques", June 2013
b) IEC 62209-1, "Procedure to measure the Specific Absorption Rate (SAR) for hand-held devices used in close proximity to the ear (frequency range of 300 MHz to 3 GHz)", February 2005
c) IEC 62209-2, "Procedure to determine the Specific Absorption Rate (SAR) for wireless communication devices used in close proximity to the human body (frequency range of 30 MHz to 6 GHz)", March 2010
d) KDB 865664, "SAR Measurement Requirements for 100 MHz to 6 GHz"

Methods Applied and Interpretation of Parameters:

- *NORMx,y,z:* Assessed for E-field polarization ϑ = 0 (f ≤ 900 MHz in TEM-cell; f > 1800 MHz: R22 waveguide). NORMx,y,z are only intermediate values, i.e., the uncertainties of NORMx,y,z does not affect the E^2-field uncertainty inside TSL (see below *ConvF*).
- *NORM(f)x,y,z = NORMx,y,z * frequency_response* (see Frequency Response Chart). This linearization is implemented in DASY4 software versions later than 4.2. The uncertainty of the frequency response is included in the stated uncertainty of *ConvF*.
- *DCPx,y,z:* DCP are numerical linearization parameters assessed based on the data of power sweep with CW signal (no uncertainty required). DCP does not depend on frequency nor media.
- *PAR:* PAR is the Peak to Average Ratio that is not calibrated but determined based on the signal characteristics
- *Ax,y,z; Bx,y,z; Cx,y,z; Dx,y,z; VRx,y,z: A, B, C, D* are numerical linearization parameters assessed based on the data of power sweep for specific modulation signal. The parameters do not depend on frequency nor media. *VR* is the maximum calibration range expressed in RMS voltage across the diode.
- *ConvF and Boundary Effect Parameters:* Assessed in flat phantom using E-field (or Temperature Transfer Standard for f ≤ 800 MHz) and inside waveguide using analytical field distributions based on power measurements for f > 800 MHz. The same setups are used for assessment of the parameters applied for boundary compensation (alpha, depth) of which typical uncertainty values are given. These parameters are used in DASY4 software to improve probe accuracy close to the boundary. The sensitivity in TSL corresponds to *NORMx,y,z * ConvF* whereby the uncertainty corresponds to that given for *ConvF*. A frequency dependent *ConvF* is used in DASY version 4.4 and higher which allows extending the validity from ± 50 MHz to ± 100 MHz.
- *Spherical isotropy (3D deviation from isotropy)*: in a field of low gradients realized using a flat phantom exposed by a patch antenna.
- *Sensor Offset*: The sensor offset corresponds to the offset of virtual measurement center from the probe tip (on probe axis). No tolerance required.
- *Connector Angle*: The angle is assessed using the information gained by determining the *NORMx* (no uncertainty required).

Probe EX3DV4

SN:3745

Manufactured: March 26, 2010
Calibrated: April 20, 2016

Calibrated for DASY/EASY Systems
(Note: non-compatible with DASY2 system!)

DASY/EASY - Parameters of Probe: EX3DV4 - SN:3745

Basic Calibration Parameters

	Sensor X	Sensor Y	Sensor Z	Unc (k=2)
Norm ($\mu V/(V/m)^2$)[A]	0.48	0.44	0.49	± 10.1 %
DCP (mV)[B]	101.1	98.5	100.3	

Modulation Calibration Parameters

UID	Communication System Name		A dB	B dB$\sqrt{\mu V}$	C	D dB	VR mV	Unc[E] (k=2)
0	CW	X	0.0	0.0	1.0	0.00	157.8	±3.5 %
		Y	0.0	0.0	1.0		150.7	
		Z	0.0	0.0	1.0		157.6	

Sensor Model Parameters

	C1 fF	C2 fF	α V^{-1}	T1 ms.V^{-2}	T2 ms.V^{-1}	T3 ms	T4 V^{-2}	T5 V^{-1}	T6
X	73.15	549	35.93	25.19	1.909	5.01	0.216	0.724	1.005
Y	60.79	452.1	35.43	18.66	1.381	5.012	0.574	0.473	1.004
Z	89.26	674.8	36.45	27.95	2.76	5.041	0	0.879	1.009

The reported uncertainty of measurement is stated as the standard uncertainty of measurement multiplied by the coverage factor k=2, which for a normal distribution corresponds to a coverage probability of approximately 95%.

[A] The uncertainties of Norm X,Y,Z do not affect the E^2-field uncertainty inside TSL (see Pages 5 and 6).
[B] Numerical linearization parameter: uncertainty not required.
[E] Uncertainty is determined using the max. deviation from linear response applying rectangular distribution and is expressed for the square of the field value.

DASY/EASY - Parameters of Probe: EX3DV4 - SN:3745

Calibration Parameter Determined in Head Tissue Simulating Media

f (MHz) [C]	Relative Permittivity [F]	Conductivity (S/m) [F]	ConvF X	ConvF Y	ConvF Z	Alpha [G]	Depth [G] (mm)	Unc (k=2)
300	45.3	0.87	10.78	10.78	10.78	0.12	1.20	± 13.3 %
450	43.5	0.87	9.47	9.47	9.47	0.15	1.20	± 13.3 %
650	42.5	0.89	9.27	9.27	9.27	0.09	1.20	± 13.3 %
750	41.9	0.89	9.16	9.16	9.16	0.50	0.80	± 12.0 %
835	41.5	0.90	8.77	8.77	8.77	0.41	0.88	± 12.0 %
900	41.5	0.97	8.57	8.57	8.57	0.30	1.06	± 12.0 %
1450	40.5	1.20	7.48	7.48	7.48	0.38	0.80	± 12.0 %
1640	40.3	1.29	7.64	7.64	7.64	0.35	0.80	± 12.0 %
1750	40.1	1.37	7.59	7.59	7.59	0.34	0.80	± 12.0 %
1900	40.0	1.40	7.36	7.36	7.36	0.36	0.80	± 12.0 %
1950	40.0	1.40	7.16	7.16	7.16	0.32	0.80	± 12.0 %
2450	39.2	1.80	6.75	6.75	6.75	0.31	0.94	± 12.0 %
2600	39.0	1.96	6.53	6.53	6.53	0.41	0.80	± 12.0 %
5200	36.0	4.66	4.83	4.83	4.83	0.35	1.80	± 13.1 %
5300	35.9	4.76	4.57	4.57	4.57	0.40	1.80	± 13.1 %
5500	35.6	4.96	4.24	4.24	4.24	0.45	1.80	± 13.1 %
5600	35.5	5.07	4.05	4.05	4.05	0.50	1.80	± 13.1 %
5800	35.3	5.27	4.16	4.16	4.16	0.50	1.80	± 13.1 %

[C] Frequency validity above 300 MHz of ± 100 MHz only applies for DASY v4.4 and higher (see Page 2), else it is restricted to ± 50 MHz. The uncertainty is the RSS of the ConvF uncertainty at calibration frequency and the uncertainty for the indicated frequency band. Frequency validity below 300 MHz is ± 10, 25, 40, 50 and 70 MHz for ConvF assessments at 30, 64, 128, 150 and 220 MHz respectively. Above 5 GHz frequency validity can be extended to ± 110 MHz.
[F] At frequencies below 3 GHz, the validity of tissue parameters (ε and σ) can be relaxed to ± 10% if liquid compensation formula is applied to measured SAR values. At frequencies above 3 GHz, the validity of tissue parameters (ε and σ) is restricted to ± 5%. The uncertainty is the RSS of the ConvF uncertainty for indicated target tissue parameters.
[G] Alpha/Depth are determined during calibration. SPEAG warrants that the remaining deviation due to the boundary effect after compensation is always less than ± 1% for frequencies below 3 GHz and below ± 2% for frequencies between 3-6 GHz at any distance larger than half the probe tip diameter from the boundary.

DASY/EASY - Parameters of Probe: EX3DV4 - SN:3745

Calibration Parameter Determined in Body Tissue Simulating Media

f (MHz) [C]	Relative Permittivity [F]	Conductivity (S/m) [F]	ConvF X	ConvF Y	ConvF Z	Alpha [G]	Depth [G] (mm)	Unc (k=2)
300	58.2	0.92	10.07	10.07	10.07	0.05	1.20	± 13.3 %
450	56.7	0.94	9.89	9.89	9.89	0.08	1.20	± 13.3 %
650	55.9	0.96	9.35	9.35	9.35	0.10	1.20	± 13.3 %
750	55.5	0.96	8.78	8.78	8.78	0.48	0.80	± 12.0 %
835	55.2	0.97	8.69	8.69	8.69	0.50	0.80	± 12.0 %
900	55.0	1.05	8.71	8.71	8.71	0.47	0.85	± 12.0 %
1450	54.0	1.30	7.73	7.73	7.73	0.37	0.80	± 12.0 %
1640	53.8	1.40	7.66	7.66	7.66	0.44	0.80	± 12.0 %
1750	53.4	1.49	7.27	7.27	7.27	0.37	0.85	± 12.0 %
1900	53.3	1.52	7.06	7.06	7.06	0.44	0.80	± 12.0 %
1950	53.3	1.52	7.28	7.28	7.28	0.41	0.80	± 12.0 %
2450	52.7	1.95	6.73	6.73	6.73	0.44	0.80	± 12.0 %
2600	52.5	2.16	6.60	6.60	6.60	0.30	0.80	± 12.0 %
5200	49.0	5.30	3.98	3.98	3.98	0.50	1.90	± 13.1 %
5300	48.9	5.42	3.90	3.90	3.90	0.50	1.90	± 13.1 %
5500	48.6	5.65	3.50	3.50	3.50	0.60	1.90	± 13.1 %
5600	48.5	5.77	3.37	3.37	3.37	0.60	1.90	± 13.1 %
5800	48.2	6.00	3.60	3.60	3.60	0.60	1.90	± 13.1 %

[C] Frequency validity above 300 MHz of ± 100 MHz only applies for DASY v4.4 and higher (see Page 2), else it is restricted to ± 50 MHz. The uncertainty is the RSS of the ConvF uncertainty at calibration frequency and the uncertainty for the indicated frequency band. Frequency validity below 300 MHz is ± 10, 25, 40, 50 and 70 MHz for ConvF assessments at 30, 64, 128, 150 and 220 MHz respectively. Above 5 GHz frequency validity can be extended to ± 110 MHz.
[F] At frequencies below 3 GHz, the validity of tissue parameters (ε and σ) can be relaxed to ± 10% if liquid compensation formula is applied to measured SAR values. At frequencies above 3 GHz, the validity of tissue parameters (ε and σ) is restricted to ± 5%. The uncertainty is the RSS of the ConvF uncertainty for indicated target tissue parameters.
[G] Alpha/Depth are determined during calibration. SPEAG warrants that the remaining deviation due to the boundary effect after compensation is always less than ± 1% for frequencies below 3 GHz and below ± 2% for frequencies between 3-6 GHz at any distance larger than half the probe tip diameter from the boundary.

EX3DV4– SN:3745

April 20, 2016

Frequency Response of E-Field
(TEM-Cell:ifi110 EXX, Waveguide: R22)

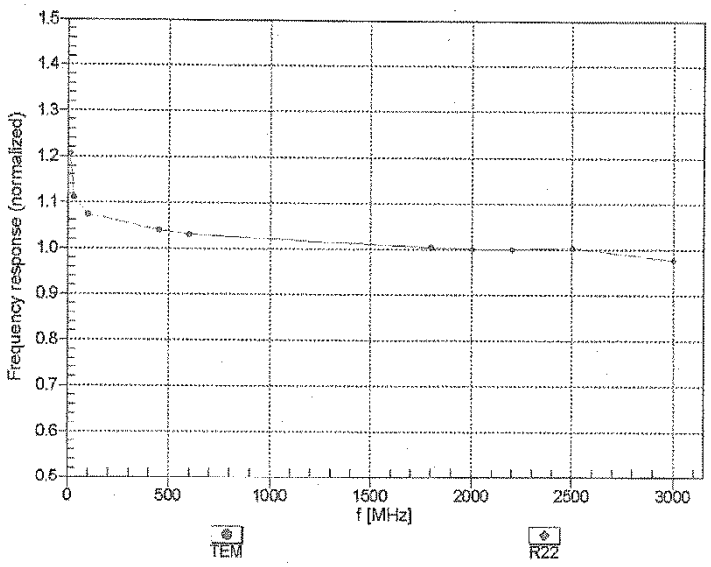

Uncertainty of Frequency Response of E-field: ± 6.3% (k=2)

UL Japan, Inc.
Ise EMC Lab.
4383-326 Asama-cho, Ise-shi, Mie-ken 516-0021 JAPAN
Telephone: +81 596 24 8999
Facsimile: +81 596 24 8124

EX3DV4– SN:3745

April 20, 2016

Receiving Pattern (ϕ), ϑ = 0°

f=600 MHz,TEM

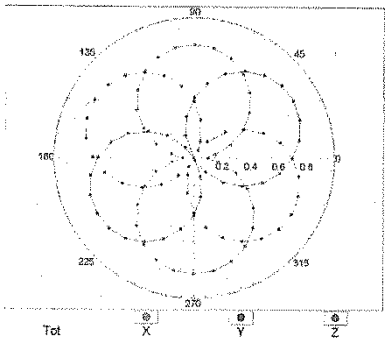

f=1800 MHz,R22

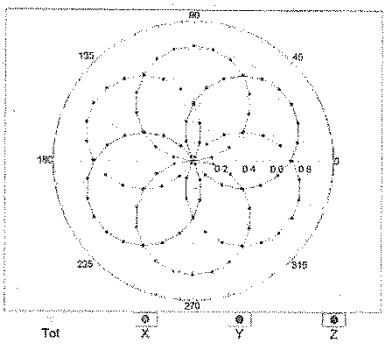

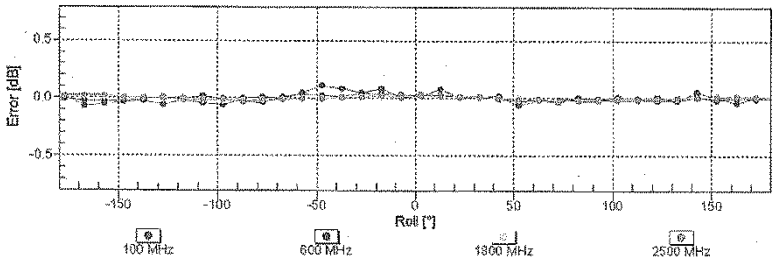

Uncertainty of Axial Isotropy Assessment: ± 0.5% (k=2)

EX3DV4– SN:3745

April 20, 2016

Dynamic Range f(SAR$_{head}$)
(TEM cell , f_{eval}= 1900 MHz)

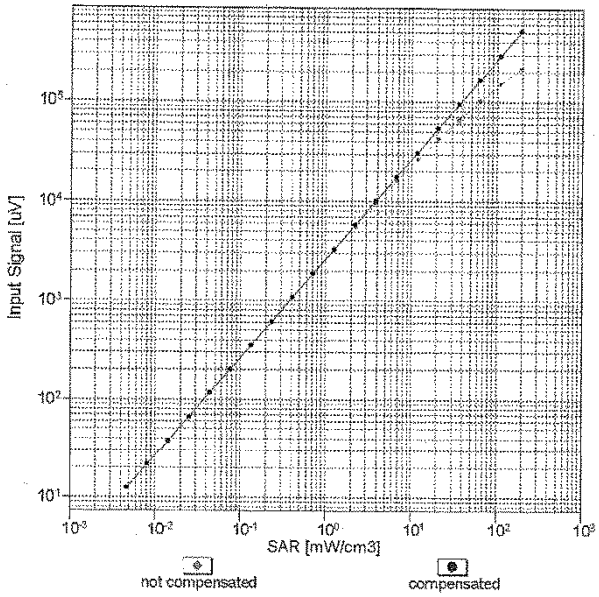

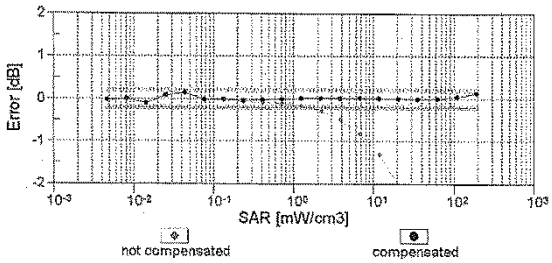

Uncertainty of Linearity Assessment: ± 0.6% (k=2)

EX3DV4– SN:3745

April 20, 2016

Conversion Factor Assessment

f = 900 MHz,WGLS R9 (H_convF)

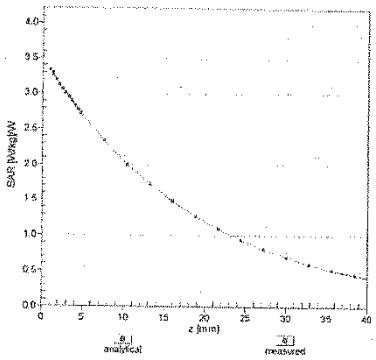

f = 1750 MHz,WGLS R22 (H_convF)

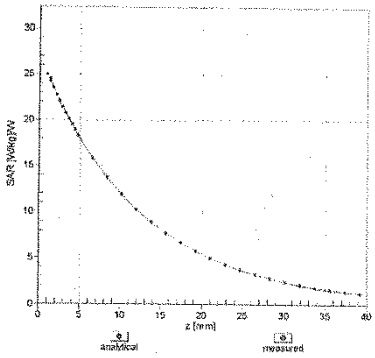

Deviation from Isotropy in Liquid

Error (ϕ, ϑ), f = 900 MHz

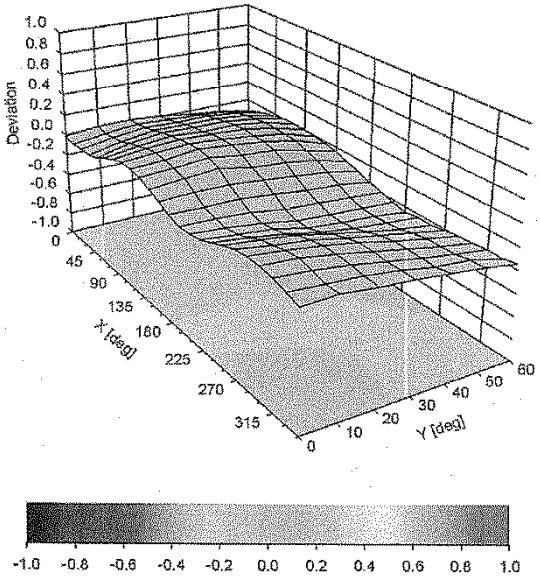

Uncertainty of Spherical Isotropy Assessment: ± 2.6% (k=2)

DASY/EASY - Parameters of Probe: EX3DV4 - SN:3745

Other Probe Parameters

Sensor Arrangement	Triangular
Connector Angle (°)	62.7
Mechanical Surface Detection Mode	enabled
Optical Surface Detection Mode	disabled
Probe Overall Length	337 mm
Probe Body Diameter	10 mm
Tip Length	9 mm
Tip Diameter	2.5 mm
Probe Tip to Sensor X Calibration Point	1 mm
Probe Tip to Sensor Y Calibration Point	1 mm
Probe Tip to Sensor Z Calibration Point	1 mm
Recommended Measurement Distance from Surface	1.4 mm

System check uncertainty

The uncertainty budget has been determined for the DASY5 measurement system according to the SPEAG documents and is given in the following Table.

Repeatability Budget for System Check

<0.3 – 3GHz range Body>

Error Description	Uncertainty value ± %	Probability distribution	divisor	(ci) 1g	Standard (1g)	vi or veff
Measurement System						
Probe calibration	± 1.8	Normal	1	1	± 1.8	∞
Axial isotropy of the probe	± 0.0	Rectangular	√3	1	± 0.0	∞
Spherical isotropy of the probe	± 0.0	Rectangular	√3	1	± 0.0	∞
Boundary effects	± 0.0	Rectangular	√3	1	± 0.0	∞
Probe linearity	± 0.0	Rectangular	√3	1	± 0.0	∞
Detection limit	± 0.0	Rectangular	√3	1	± 0.0	∞
Modulation response	± 0.0	Rectangular	√3	1	± 0.0	∞
Readout electronics	± 0.0	Normal	1	1	± 0.0	∞
Response time	± 0.0	Rectangular	√3	1	± 0.0	∞
Integration time	± 0.0	Rectangular	√3	1	± 0.0	∞
RF ambient Noise	± 0.0	Rectangular	√3	1	± 0.0	∞
RF ambient Reflections	± 0.0	Rectangular	√3	1	± 0.0	∞
Probe Positioner	± 0.4	Rectangular	√3	1	± 0.2	∞
Probe positioning	± 2.9	Rectangular	√3	1	± 1.7	∞
Max.SAR Eval.	± 0.0	Rectangular	√3	1	± 0.0	∞
Test Sample Related						
Deviation of wxp.dipole	± 0.0	Rectangular	√3	1	± 0.0	∞
Dipole Axis to Liquid Distance	± 2.0	Rectangular	√3	1	± 1.2	∞
Input power and SAR drift meas.	± 3.4	Rectangular	√3	1	± 2.0	∞
Phantom and Setup						
Phantom uncertainty	± 4.0	Rectangular	√3	1	± 2.3	∞
Algorithm for correcting SAR for deviations in permittivity and conductivity	± 1.9	Rectangular	√3	1	± 1.1	∞
Liquid conductivity (meas.)	± 5.0	Normal	1	0.78	+ 3.9	∞
Liquid permittivity (meas.)	± 5.0	Normal	1	0.26	- 1.3	∞
Liquid conductivity - temp.unc (below 2deg.C.)	± 1.7	Rectangular	√3	0.78	± 0.8	∞
Liquid permittivity - temp.unc (below 2deg.C.)	± 0.3	Rectangular	√3	0.23	± 0.0	∞
Combined Standard Uncertainty					± **5.945**	
Expanded Uncertainty (k=2)					± **11.9**	

<3 – 6GHz range Body>

Error Description	Uncertainty value ± %	Probability distribution	divisor	(ci) 1g	Standard (1g)	vi or veff
Measurement System						
Probe calibration	± 1.8	Normal	1	1	± 1.8	∞
Axial isotropy of the probe	± 0.0	Rectangular	√3	1	± 0.0	∞
Spherical isotropy of the probe	± 0.0	Rectangular	√3	1	± 0.0	∞
Boundary effects	± 0.0	Rectangular	√3	1	± 0.0	∞
Probe linearity	± 0.0	Rectangular	√3	1	± 0.0	∞
Detection limit	± 0.0	Rectangular	√3	1	± 0.0	∞
Modulation response	± 0.0	Rectangular	√3	1	± 0.0	∞
Readout electronics	± 0.0	Normal	1	1	± 0.0	∞
Response time	± 0.0	Rectangular	√3	1	± 0.0	∞
Integration time	± 0.0	Rectangular	√3	1	± 0.0	∞
RF ambient Noise	± 0.0	Rectangular	√3	1	± 0.0	∞
RF ambient Reflections	± 0.0	Rectangular	√3	1	± 0.0	∞
Probe Positioner	± 0.8	Rectangular	√3	1	± 0.5	∞
Probe positioning	± 6.7	Rectangular	√3	1	± 3.9	∞
MaxSAR Eval.	± 0.0	Rectangular	√3	1	± 0.0	∞
Test Sample Related						
Deviation of wxp.dipole	± 0.0	Rectangular	√3	1	± 0.0	∞
Dipole Axis to Liquid Distance	± 2.0	Rectangular	√3	1	± 1.2	∞
Input power and SAR drift meas.	± 3.4	Rectangular	√3	1	± 2.0	∞
Phantom and Setup						
Phantom uncertainty	± 4.0	Rectangular	√3	1	± 2.3	∞
Algorithm for correcting SAR for deviations in permittivity and conductivity	± 1.9	Rectangular	√3	1	± 1.1	∞
Liquid conductivity (meas.)	± 5.0	Normal	1	0.78	+ 3.9	∞
Liquid permittivity (meas.)	± 5.0	Normal	1	0.26	- 1.3	∞
Liquid conductivity - temp.unc (below 2deg.C.)	± 1.7	Rectangular	√3	0.78	± 0.8	∞
Liquid permittivity - temp.unc (below 2deg.C.)	± 0.3	Rectangular	√3	0.23	± 0.0	∞
Combined Standard Uncertainty					± **6.906**	
Expanded Uncertainty (k=2)					± **13.8**	