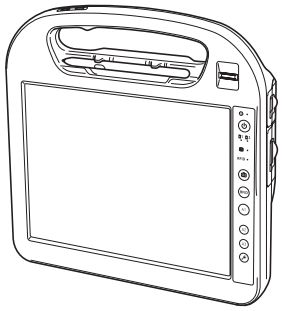

Panasonic®

OPERATING INSTRUCTIONS

Personal Computer

Model No. **CF-H1** series

Contents

Getting Started

Introduction 2
Read Me First 3
Description of Parts 9
Preparation 11
First-time Operation 12

Useful Information

On-screen Manual 16
Handling and Maintenance 17
Reinstalling Software 18

Troubleshooting

Troubleshooting (Basic) 20

Appendix

LIMITED USE LICENSE AGREEMENT 24
Specifications 26
LIMITED WARRANTY 28

For further information about the computer, you can refer to the on-screen manual.
To access the on-screen manual
➔ page 16 "On-screen Manual"

Please read these instructions carefully before using this product and save this manual for future use.

Introduction

Thank you for purchasing this Panasonic computer. For optimum performance and safety, please read these instructions carefully.

In these instructions, the names are referred as follows.

Windows Vista

- "Windows Vista® Business Service Pack 1" as "Windows" or "Windows Vista"

Windows XP

- "Microsoft® Windows® XP Tablet PC Edition 2005 Service Pack 3 as "Windows" or "Windows XP"

■ Terms and illustrations in these instructions

➔ :	Page in these Operating Instructions or in the Reference Manual.
:	Reference to the on-screen manuals.
CAUTION :	Conditions that may result in minor or moderate injury.
NOTE :	Useful and helpful information.
Click :	Touch the screen with the digitizer pen.
Right-click :	Touch and hold with the digitizer pen, or touch and select the right button of "touch pointer".

Windows Vista

(Start) - [All Programs] :
Click (Start), and then click [All Programs].

Windows XP

[start] - [All Programs] :
Click [start], and then click [All Programs].
You may need to double-click in some cases.

<Only when connected to Cradle and keyboard>

↵ :	Press [↵] (Enter) key.
Ctrl + **F7**:	Press and hold **Ctrl** key, and then press **F7** key.

- Some illustrations are simplified to help your understanding and may look different from the actual unit.
- If you do not log on as an administrator, you cannot use some functions or cannot display some screens.
- Refer for the latest information about optional products to the catalogs, etc.

■ Disclaimer

Computer specifications and manuals are subject to change without notice. Panasonic Corporation assumes no liability for damage incurred directly or indirectly from errors, omissions or discrepancies between the computer and the manuals.

■ Trademarks

Microsoft®, Windows®, Windows Vista®, and the Windows logo are registered trademarks of Microsoft Corporation of the United States and/or other countries.
Intel, Core, Centrino and PROSet are either registered trademarks or trademarks of Intel Corporation.

Adobe, the Adobe logo and Adobe Reader are either registered trademarks or trademarks of Adobe Systems Incorporated in the United States and/or other countries.
Computrace® is a registered trademark of Absolute® Software Corp.
Bluetooth™ is a trademark owned by Bluetooth SIG, Inc., U.S.A. and licensed to Panasonic Corporation.
Names of products, brands, etc., appearing in this manual are trademarks or registered trademarks of their respective own companies.

Read Me First

Models for U.S.A.

Federal Communications Commission Radio Frequency Interference Statement

Note: This equipment has been tested and found to comply with the limits for a Class B digital device, pursuant to Part 15 of the FCC Rules. These limits are designed to provide reasonable protection against harmful interference in a residential installation. This equipment generates, uses and can radiate radio frequency energy and, if not installed and used in accordance with the instructions, may cause harmful interference to radio communications. However, there is no guarantee that interference will not occur in a particular installation. If this equipment does cause harmful interference to radio or television reception, which can be determined by turning the equipment off and on, the user is encouraged to try to correct the interference by one or more of the following measures:

- Reorient or relocate the receiving antenna.
- Increase the separation between the equipment and receiver.
- Connect the equipment into an outlet on a circuit different from that to which the receiver is connected.
- Consult the Panasonic Service Center or an experienced radio/TV technician for help.

Warning

To assure continued compliance, use only shielded interface cables when connecting to a computer or peripheral. Also, any changes or modifications not expressly approved by the party responsible for compliance could void the user's authority to operate this equipment.

FCC RF Exposure Warning:

- This computer complies with FCC radiation exposure limits set forth for an uncontrolled environment.
- This computer may not be co-located or operated with any other antenna or transmitter.
- This PC with WLAN and/or Bluetooth transmitters installed, has been approved for portable operation and does not require any minimum spacing be provided between antennas and all person's body.

This product is restricted to indoor use due to its operation in the 5.15 to 5.25 GHz frequency range. FCC requires this product to be used indoors for the frequency range 5.15 to 5.25 GHz to reduce the potential for harmful interference to co-channel Mobile Satellite systems. High power radars are allocated as primary users of the 5.25 to 5.35 GHz and 5.65 to 5.85 GHz bands. These radar stations can cause interference with and/or damage this product.

<Only for model with wireless WAN>

- This PC with WWAN transmitter installed, has been approved for portable operation and does not require any minimum spacing be provided between antennas and all person's body.

25-M-W-1

This device complies with Part 15 of the FCC Rules. Operation is subject to the following two conditions:

(1) This device may not cause harmful interference, and
(2) This device must accept any interference received, including interference that may cause undesired operation.

Responsible Party: Panasonic Corporation of North America
One Panasonic Way
Secaucus, NJ 07094
Tel No:1-800-LAPTOP5 (1-800-527-8675)

6-M-1

NOTICE for the products using LCD

This product has a fluorescent lamp that contains mercury. Disposal may be regulated in your community due to environmental considerations.
For disposal or recycling information, please contact your local authorities, or the Electronic Industries Alliance:
<http://www.eiae.org/>

24-M-2

Models for Canada

Canadian ICES-003

This Class B digital apparatus complies with Canadian ICES-003.
Cet appareil numérique de la classe B est conforme à la norme NMB-003 du Canada.

7-M-2

Industry Canada

This product complies with RSS310 Industry Canada.
Operation is subject to the following two conditions;

(1) this device may not cause interference, and
(2) this device must accept any interference, including interference that may cause undesired operation of the device.

30-Ca-1-1

This product (local network devices) for the band 5150-5250 MHz is only indoor usage to reduce potential for harmful interference to co-channel Mobile Satellite systems.
High power radars are allocated as primary users (meaning they have priority) of 5250-5350 MHz and 5650-5850 MHz and these radars could cause interference and/or damage to LELAN devices.

30-Ca-2-1

Information to the User

This product and your Health

This product, like other radio devices, emits radio frequency electromagnetic energy. The level of energy emitted by this product however is far much less than the electromagnetic energy emitted by wireless devices like for example mobile phones.
Because this product operates within the guidelines found in radio frequency safety standards and recommendations, we believe this product is safe for use by consumers. These standards and recommendations reflect the consensus of the scientific community and result from deliberations of panels and committees of scientists who continually review and interpret the extensive research literature.
In some situations or environments, the use of this product may be restricted by the proprietor of the building or responsible representatives of the organization. These situations may for example include:

- Using this product on board of airplanes, or
- In any other environment where the risk of interference to other devices or services is perceived or identified as harmful.

If you are uncertain of the policy that applies on the use of wireless devices in a specific organization or environment (e.g. airports), you are encouraged to ask for authorization to use this product prior to turning on the product.

Regulatory Information

We are not responsible for any radio or television interference caused by unauthorized modification of this product. The correction of interference caused by such unauthorized modification will be the responsibility of the user. We and its authorized resellers or distributors are not liable for damage or violation of government regulations that may arise from failing to comply with these guidelines.

26-M-1

Ce produit et votre santé

Ce produit, comme tout autre appareil radio, émet de l'énergie radioélectrique. Toutefois, la quantité d'énergie émise par ce produit est beaucoup moins importante que l'énergie radioélectrique émise par des appareils sans filtels que les téléphones portables. L'utilisation de ce produit ne comporte aucun risque pour le consommateur du fait que cet appareil opère dans les limites des directives concernant les normes et les recommandations de sécurité sur les fréquences radio. Ces normes et recommandations reflètent le consensus de la communauté scientifi que et résultent de délibérations de jurys et comités de scientifiques qui examinent et interprètent continuellement les nouveautés de la vaste littérature sur les recherches effectuées. Dans certaines situations ou environnements, l'utilisation de ce produit peut être restreinte par le propriétaire du bâtiment ou par les représentants responsables de l'organisation. Ces situations peuvent être les suivantes par exemple :

- A bord d'un avion, ou
- Dans tout autre environnement où les risques d'interférence sur d'autres appareils ou services sont perçus ou identifi ables comme dangereux.

Si vous n'êtes pas sûr de la réglementation applicable à l'utilisation d'appareils sans fil dans une organisation ou un environnement spécifi que, (par exemple dans un aéroport) nous vous invitons à demander l'autorisation d'utiliser ce produit avant sa mise en marche.

Informations concernant la réglementation

Nous déclinons toute responsabilité pour toute interférence radio ou télévision causée par des modifications non autorisées apportées à ce produit. La correction d'interférences causées par de telles modifications non autorisées sera la seule responsabilité de son utilisateur. Nousmêmes, les revendeurs officiels et les distributeurs ne sommes pas responsable de tout dégât ou de toute violation des règlements de l'État pouvant découler du non-respect de ces directives.

26-F-1

Safety Precautions

<Only for model with wireless WAN>
The following safety precautions must be observed during all phases of the operation, usage, service or repair of any Personal Computer or Handheld Computer incorporating wireless WAN modem. Manufacturers of the cellular terminal are advised to convey the following safety information to users and operating personnel and to incorporate these guidelines into all manuals supplied with the product. Failure to comply with these precautions violates safety standards of design, manufacture and intended use of the product. Panasonic assumes no liability for customer failure to comply with these precautions*1.

When in a hospital or other health care facility, observe the restrictions on the use of mobiles. Switch Personal Computer or Handheld Computer incorporating wireless WAN modem off, if instructed to do so by the guidelines posted in sensitive areas. Medical equipment may be sensitive to RF energy.
The operation of cardiac pacemakers, other implanted medical equipment and hearing aids can be affected by interference from Personal Computer or Handheld Computer incorporating wireless WAN modem placed close to the device. If in doubt about potential danger, contact the physician or the manufacturer of the device to verify that the equipment is properly shielded. Pacemaker patients are advised to keep their Personal Computer or Handheld Computer incorporating wireless WAN modem away from the pacemaker, while it is on.

Switch off Personal Computer or Handheld Computer incorporating wireless WAN modem before boarding an aircraft. Make sure it cannot be switched on inadvertently. The operation of wireless appliances in an aircraft is forbidden to prevent interference with communications systems. Failure to observe these instructions may lead to the suspension or denial of cellular services to the offender, legal action, or both.

Do not operate Personal Computer or Handheld Computer incorporating wireless WAN modem in the presence of flammable gases or fumes. Switch off the cellular terminal when you are near petrol stations, fuel depots, chemical plants or where blasting operations are in progress. Operation of any electrical equipment in potentially explosive atmospheres can constitute a safety hazard.

Your Personal Computer or Handheld Computer incorporating wireless WAN modem receives and transmits radio frequency energy while switched on. Remember that interference can occur if it is used close to TV sets, radios, computers or inadequately shielded equipment. Follow any special regulations and always switch off Personal Computer or Handheld Computer incorporating wireless WAN modem wherever forbidden, or when you suspect that it may cause interference or danger.

Road safety comes first! Do not use a Personal Computer or Handheld Computer incorporating wireless WAN modem while driving a vehicle. Do not place the computer with wireless WAN modem in an area where it could cause personal injury to the driver or passengers. It is recommended to stow the unit in the boot or secure stowage area while driving.
Do not place the computer with wireless WAN modem in an area over an air bag or in the vicinity where an air bag may deploy.
Air bags inflate with great force and if the computer with wireless WAN modem is placed in the air bag deployment area may be propelled with great force and cause serious injury to occupants of the vehicle.

IMPORTANT!
Personal Computer or Handheld Computer incorporating wireless WAN modem operate using radio signals and cellular networks cannot be guaranteed to connect in all conditions. Therefore, you should never rely solely upon any wireless device for essential communications, for example emergency calls.

Remember, in order to make or receive calls, Personal Computer or Handheld Computer incorporating wireless WAN modem must be switched on and in a service area with adequate cellular signal strength.

Some networks do not allow for emergency calls if certain network services or phone features are in use (e.g. lock functions, fixed dialing etc.). You may need to deactivate those features before you can make an emergency call.
Some networks require that a valid SIM card be properly inserted in Personal Computer or Handheld Computer incorporating wireless WAN modem.

27-1-2

*1 In locations where the use of wireless devices is prohibited, please turn your computer off. Please note that in some cases, wireless devices may be operating even in Sleep/Standby modes.

Lithium Battery / Pile au lithium

Lithium Battery!

This computer contains a lithium battery to enable the date, time, and other data to be stored. The battery should only be exchanged by authorized service personnel.
Warning!
A risk of explosion from incorrect installation or misapplication may possibly occur.

15-E-1

Pile au lithium!

Le micro-ordinateur renferme une pile au lithium qui permet de sauvegarder certaines données, notamment la date et l'heure. La pile ne doit être remplacée que par un technicien qualifié.
Danger! Risque d'explosion en cas de non respect de cette mise en garde!

15-F-1

Information on Disposal in other Countries outside the European Union

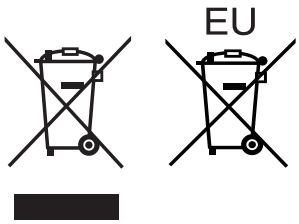

These symbols are only valid in the European Union.
If you wish to discard this product, please contact your local authorities or dealer and ask for the correct method of disposal.

53-M-1

Precautions

THIS PRODUCT IS NOT INTENDED FOR USE AS, OR AS PART OF, NUCLEAR EQUIPMENT/SYSTEMS, AIR TRAFFIC CONTROL EQUIPMENT/SYSTEMS, OR AIRCRAFT COCKPIT EQUIPMENT/SYSTEMS[*2]. PANASONIC WILL NOT BE RESPONSIBLE FOR ANY LIABILITY RESULTING FROM THE USE OF THIS PRODUCT ARISING OUT OF THE FOREGOING USES.

[*2] AIRCRAFT COCKPIT EQUIPMENT/SYSTEMS include Class2 Electrical Flight Bag (EFB) Systems and Class1 EFB Systems when used during critical phases of flight (e.g., during take-off and landing) and/or mounted on to the aircraft. Class1 EFB Systems and 2 EFB Systems are defined by FAA: AC (Advisory Circular) 120-76A or JAA: JAA TGL (Temporary Guidance Leaflets) No.36.

Panasonic cannot guarantee any specifications, technologies, reliability, safety (e.g. Flammability/Smoke/Toxicity/Radio Frequency Emission, etc) requirements related to aviation standards that exceed the specifications of our COTS (Commercial-Off-The-Shelf) products.

39-E-1

This computer is not intended to be used as following equipment.
- Medical equipment
- Life-support systems
- Air traffic control systems
- Other equipment, devices or systems that are involved with ensuring human life or safety.

Panasonic cannot be held responsible in any way for any damages or loss resulting from the use of this unit in these types of equipment, devices or systems, etc.
The CF-H1 was developed based on thorough research into the real-world portable computing environments. Exhaustive pursuit of usability and reliability under harsh conditions led to innovations such has the magnesium alloy exterior, vibration damped hard disc drive, flexible internal connections. The CF-H1's outstanding engineering has been tested using the strict MIL-STD- 810F (for vibration and shock) and IP (for dust and water) based procedures.
As with any portable computer device precautions should be taken to avoid any damage. The following usage and handling procedures are recommended.

Before putting the computer away, be sure to wipe off any moisture.

If a Malfunction Occurs, Immediately Unplug the AC Plug and the Battery Pack
- This product is damaged
- Foreign object inside this product
- Smoke emitted
- Unusual smell emitted
- Unusually hot

Continuing to use this product while any of the above conditions are present may result in fire or electric shock.
- If a malfunction occurs, immediately turn the power off and unplug the AC plug, and then remove the battery pack. Then, contact your technical support office.

Do Not Touch This Product and Cable When It Starts Thundering
Electric shock may result.

Do Not Connect the AC Adaptor to a Power Source Other Than a Standard Household AC Outlet
Otherwise, a fire due to overheating may result. Connecting to a DC/AC converter (inverter) may damage the AC adaptor. On an airplane, only connect the AC adaptor/charger to an AC outlet specifically approved for such use.

Do Not Do Anything That May Damage the AC Cord, the AC Plug, or the AC Adaptor
Do not damage or modify the cord, place it near hot tools, bend, twist, or pull it forcefully, place heavy objects on it, or bundle it tightly.
Continuing to use a damaged cord may result in fire, short circuit, or electric shock.

Do Not Pull or Insert the AC Plug If Your Hands Are Wet
Electric shock may result.

Clean Dust and Other Debris of the AC Plug Regularly
If dust or other debris accumulates on the plug, humidity, etc. may cause a defect in the insulation, which may result in a fire.
- Pull the plug, and wipe it with a dry cloth.
  Pull the plug if the computer is not being used for a long period of time.

Insert the AC Plug Completely
If the plug is not inserted completely, fire due to overheating or electric shock may result.
- Do not use a damaged plug or loose AC outlet.

Close the Connector Cover Tightly When Using This Product Where Is a Lot of Water, Moisture, Steam, Dust, Oily Vapors, etc.
The entry of foreign matter may cause a fire or electric shocks.
- If foreign matter has found its way inside, immediately turn the power off and unplug the AC cord, and then remove the battery pack. Then contact your technical support office.

Do Not Disassemble This Product
There are high-voltage areas inside which may give you an electric shock if you should touch them. Do not touch the pins and circuit boards inside, and do not allow foreign matter to enter inside.
Also, remodeling or disassembly may cause a fire.

Do Not Place This Product on Unstable Surface
If balance is lost, this product may fall over or drop, resulting in an injury.

Avoid Stacking
If balance is lost, this product may fall over or drop, resulting in an injury.

Do Not Leave This Product in High Temperature Environment for a Long Period of Time
Leaving this product where it will be exposed to extremely high temperatures such as near fire or in direct sunlight may deform the cabinet and/or cause trouble in the internal parts. Continued use in such a resulting condition may lead to short-circuiting or insulation defects, etc. which may in turn lead to a fire or electric shocks.

Hold the Plug When Unplugging the AC Plug
Pulling on the cord may damage the cord, resulting in a fire or electric shock.

Do Not Move This Product While the AC Plug Is Connected
The AC cord may be damaged, resulting in fire or electric shock.
- If the AC cord is damaged, unplug the AC plug immediately.

Use Only the Specified AC Adaptor With This Product
Using an AC adaptor other than the one supplied (attached to your product or supplied by Panasonic) may result in a fire.

Do Not Subject the AC Adaptor to Any Strong Impact
Using the AC adaptor after a strong impact such as being dropped may result in electric shock, short circuit, or fire.

Take a Break of 10-15 Minutes Every Hour
Using this product for long periods of time may have detrimental health effects on the eyes or hands.

Do Not Use with Exposing the Skin to This Product for a Long Period of Time
Using this product with exposing the skin to the heat source of this product or AC adaptor for a long period of time can cause a low-temperature burn.

- Do not place the computer near a television or radio receiver.
- Keep the computer away from magnets. Data stored on the hard disk may be lost.
- This computer is not intended for the display of images for use in medical diagnosis.
- This computer is not intended for a use with connection of medical equipment for the purpose of medical diagnosis.
- Panasonic shall not be liable for loss of data or other incidental or consequential damages resulting from the use of this product.

Precautions (Battery Pack)

Do Not Use with Any Other Product
The battery pack is rechargeable and was intended for the specified product. If it is used with a product other than the one for which it was designed, electrolyte leakage, generation of heat, ignition or rupture may result.

Do Not Charge the Battery Using Methods Other Than Those Specified
If the battery is not charged using one of the specified methods, electrolyte leakage, generation of heat, ignition or rupture may result.

Do Not Throw the Battery Pack into a Fire or Expose It to Excessive Heat
Generation of heat, ignition or rupture may result.

Avoid Extreme Heat (Near the Fire, in Direct Sunlight, for Example)
Electrolyte leakage, generation of heat, ignition or rupture may result.

Do Not Insert Sharp Objects into the Battery Pack, Expose It to Bumps or Shocks, Disassemble, or Modify It
Electrolyte leakage, generation of heat, ignition or rupture may result.

- If this product is subjected to a strong impact, stop using it immediately.

Do Not Short the Positive (+) and Negative (-) Contacts
Generation of heat, ignition or rupture may result.

- Do not place the battery pack together with articles such as necklaces or hairpins when carrying or storing.

Do Not Use This Product with a Battery Pack Other Than the One Specified
Use only the specified battery pack (CF-VZSU53W) with your product. Use of battery packs other than those manufactured and supplied by Panasonic may present a safety hazard (generation of heat, ignition or rupture).

When the Battery Pack Has Become Degraded, Replace It with a New One
Continued use of a degraded battery pack may generate high levels of heat, cause a fire to start and cause the pack to burst or explode.

- Do not touch the terminals on the battery pack. The battery pack may no longer function properly if the contacts are dirty or damaged.
- Do not expose the battery pack to water, or allow it to become wet.
- If the battery pack will not be used for a long period of time (a month or more), charge or discharge (use) the battery pack until the remaining battery level becomes 30% to 40% and store it in a cool, dry place.
- This computer prevents overcharging of the battery by recharging only when the remaining power is less than approx. 95% of capacity.
- The battery pack is not charged when the computer is first purchased. Be sure to charge it before using it for the first time. When the AC adaptor is connected to the computer, charging begins automatically.
- Should the battery leak and the fluid get into your eyes, do not rub your eyes. Immediately flush your eyes with clear water and see a doctor for medical treatment as soon as possible.

NOTE

- The battery pack may become warm during recharging or normal use. This is completely normal.
- Recharging will not commence if internal temperature of the battery pack is outside of the allowable temperature range (0 °C to 50 °C {32 °F to 131 °F}). (➔ *Reference Manual* “Battery Power”) Once the allowable range requirement is satisfied, charging begins automatically. Note that the recharging time varies based on the usage conditions. (Recharging takes longer than usual when the temperature is 10 °C {50 °F} or below.)
- In high-temperature environments, the battery takes longer to fully recharge and the operating time is shorter. Only use the computer within the allowable temperature range.
- This computer has a high temperature mode function that prevents the degradation of the battery in high temperature environments. (➔ *Reference Manual* “Battery Power”) A level corresponding to a 100% charge for high temperature mode is approximately equivalent to an 80% charge level for normal temperature mode.
- The battery pack is a consumable item. If the amount of time the computer can be run by using a particular battery pack becomes dramatically shorter and repeated recharging does not restore its performance, the battery pack should be replaced with a new one.
- When transporting a spare battery inside a package, briefcase, etc., it is recommended that it be placed in a plastic bag so that its contacts are protected.
- Always power off the computer when it is not in use. Leaving the computer on when the AC adaptor is not connected will exhaust the remaining battery capacity.

RECYCLE RBRC Li-ion 1.800.822.8837

A lithium ion battery that is recyclable powers the product you have purchased.
Please call 1-800-8-BATTERY for information on how to recycle this battery.

L’appareil que vous vous êtes procuré est alimenté par une batterie au lithium-ion.
Pour des renseignements sur le recyclage de la batterie, veuillez composer le 1-800-8-BATTERY.

48-M-1

Description of Parts

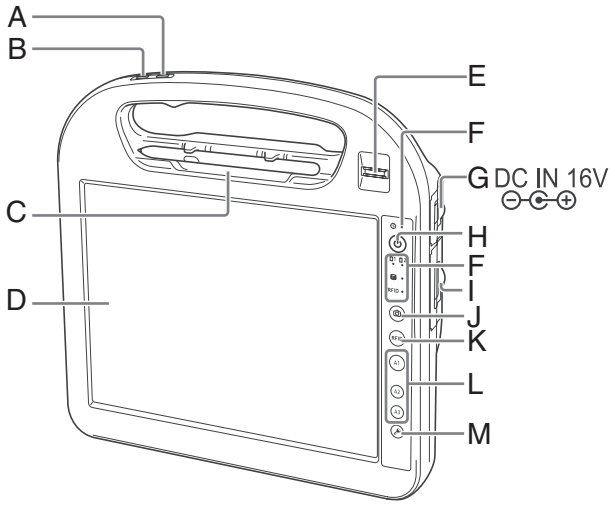

A: RFID Reader Button
➔ *Reference Manual* “RFID Reader”

B: Barcode Reader Button
<Model with Barcode Reader>

C: Pen Holder

D: LCD
➔ *Reference Manual* “Touch Screen Operation”

E: Fingerprint Reader
➔ *Reference Manual* “Fingerprint Reader”

F: LED Indicator
: Power status
- Off: Power off/Hibernation
- Green: Power on
- Blinking green
  Windows Vista : Sleep
  Windows XP : Standby

1 : Battery 1 status
➔ *Reference Manual* “Battery Power”

2 : Battery 2 status
➔ *Reference Manual* “Battery Power”

: Hard disk drive status

RFID:
RFID Reader status
➔ *Reference Manual* “RFID Reader”

G: DC-IN Jack

H: Power Switch

I: Battery 2 Case

J: Camera Button
➔ *Reference Manual* “Camera”

K: RFID Reader Button
➔ *Reference Manual* “RFID Reader”

L: Application Buttons 1-3 <Model without Barcode Reader> / Application Buttons 1-2, Barcode Reader Button <Model with Barcode reader>
➔ *Reference Manual* “Hardware Buttons”, *Supplementary Instructions for Barcode Reader*

M: Security Button
➔ *Reference Manual* “Hardware Buttons”

Description of Parts

Rear

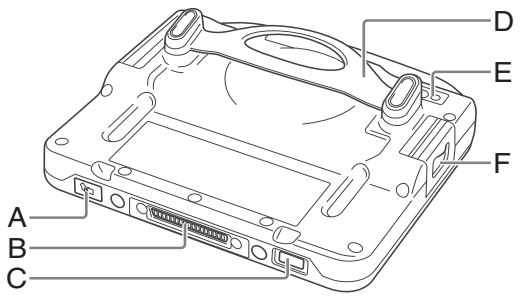

Inside

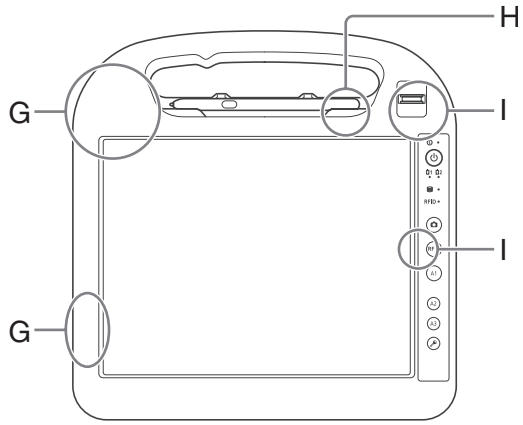

A: RFID Reader
(➔ *Reference Manual* “RFID Reader”)

B: Expansion Bus Connector

C: Barcode Reader
<Model with Barcode Reader>

D: Strap

E: Camera
(➔ *Reference Manual* “Camera”)

F: Battery 1 Case

G: Wireless WAN antenna
<Only for model with wireless WAN>

H: Bluetooth antenna
➔ *Reference Manual* “Bluetooth”

I: Wireless LAN antenna
➔ *Reference Manual* “Wireless LAN”

NOTE

- This computer contains a magnet and magnetic products at the battery cover.
  Avoid leaving metallic object or magnetic media in contact with these areas.

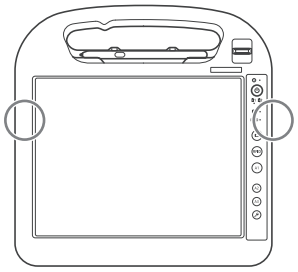

<Only for model with wireless WAN>

- IMEI (International Mobile Equipment Identity) is listed on the label in the Battery 1 case. MEID number is listed on the label in the Battery 2 case.

Preparation

■ Confirmation

① Check and identify the supplied accessories.
If you do not find the described accessories, contact Panasonic Technical Support.

- **AC Adaptor. 1**

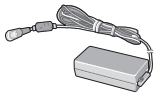

Model No: CF-AA1633A

- **AC Cord 1**

- **Battery Packs . . 2**

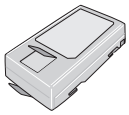

Model No: CF-VZSU53W

- **Digitizer Pen 1**

- **Tether 1**

- **Soft Cloth 1**
- **Operating Instructions (This book) 1**
- **Product Recovery DVD-ROM Windows Vista® Business SP1. . . . . .1**

② Read the LIMITED USE LICENSE AGREEMENT before breaking the seal on the computer's packaging (➔ page 24).

■ Inserting the Battery Packs

Insert the battery pack to 2 battery cases.

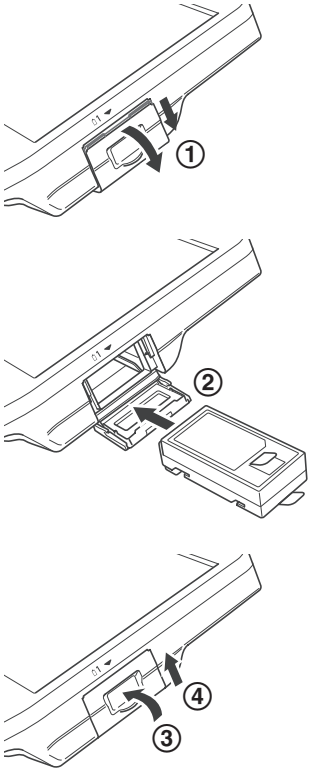

① Slide the battery cover and open it.
② Insert the battery pack until it securely fits the connector.
③ Close the battery cover.
④ Slide the battery cover until it clicks.

CAUTION

- The computer does not operate without the battery cover locked.
- Make sure the latch is securely locked. Otherwise the battery pack may fall when you carry the computer.
- Do not touch the terminals of the battery pack and the computer. Doing so can make the terminals dirty or damaged, and may cause malfunction of the battery pack and the computer.

First-time Operation

About the battery for this computer

This computer uses 2 battery packs.

The battery is charged (➔ page 13) and power is consumed only on either battery pack. These operations switch to the other battery pack automatically.

- When the computer is connected to the Cradle (optional: CF-VEBH11U), the battery pack is charged when the AC adaptor is connected to the Cradle.
- With the battery charger (optional: CF-VCBU11U) or the Cradle (optional: CF-VEBH11U), you can remove the empty battery pack from the computer and charge it while using the computer.
- You can insert or remove the battery pack while the computer is ON. Be sure not to remove the battery pack being used by mistake. (➔ *Reference Manual* "Battery Power")
- Charge the battery earlier when the battery indicator lights in red.

NOTE

- To conserve power, the following power saving methods are set at the time of purchase (when computer is plugged in).
  - The screen automatically turns off after 15 minutes of inactivity.

  Windows Vista
  - The computer automatically enters sleep[*1] after 20 minutes of inactivity.

  [*1] Refer to *Reference Manual* "Sleep and Hibernation Functions" about resuming from sleep.

  Windows XP
  - The computer automatically enters standby[*2] after 20 minutes of inactivity.

  [*2] Refer to *Reference Manual* "Standby and Hibernation Functions" about resuming from standby.
- Note that the computer consumes electricity even when the computer power is off. If the battery pack is fully charged, the battery will fully discharge in the following period of time:
  - When power is off: Approx. 2 weeks
  - In sleep (Windows Vista) / standby (Windows XP) : Approx. 2 days
  - In hibernation: Approx. 3 days
- When the DC plug is not connected to the computer, disconnect the AC cord from your AC wall outlet. Power is consumed simply by having the AC adaptor plugged into an electrical outlet.
  Power consumption in each mode is as follows. (When AC adaptor is connected)
  - When the screen is off: Approx. 9.5 W
  - In sleep (Windows Vista) / standby (Windows XP) : Approx. 1.1 W
  - The battery pack is fully charged (or not being charged) and the computer is off: Approx. 0.9 W

■ Using the digitizer pen

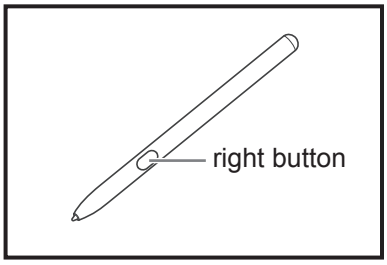

You can use Windows by touching screen in the same way as the mouse. Touch the screen surface with the digitizer pen (included).

To right-click

Touch and hold with the digitizer pen, or touch and select the right button of "touch pointer".

Attaching the digitizer pen to the computer

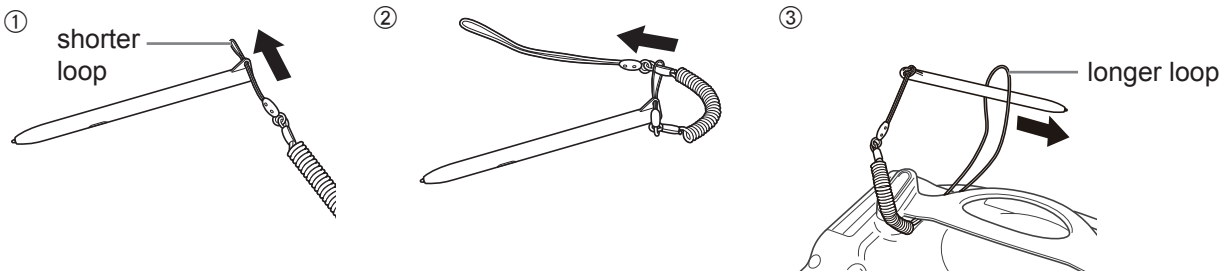

■ Setting up the computer

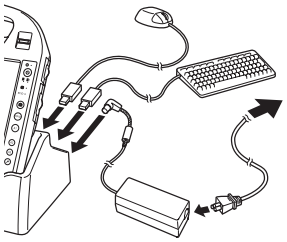

1 Set your computer to the Cradle.

- Set the computer to the cradle, and connect the external keyboard and mouse to the cradle.
- Connect the AC adaptor to the Cradle and a power outlet.
  The battery charging starts automatically.

CAUTION

- Do not remove the computer from the Cradle until the “Setting up the computer” procedure is completed.
- When using the computer for the first time, do not connect any peripheral device except the battery pack, Cradle, keyboard, mouse and AC adaptor.
- **Handling the AC adaptor**
  - Problems such as sudden voltage drops may arise during periods of thunder and lightning. Since this could adversely affect your computer, an uninterruptible power source (UPS) is highly recommended unless running from the battery pack alone.

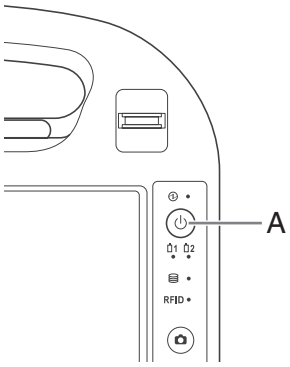

2 Turn on the computer.

① Press the power switch (A).
The power indicator ⏻ lights.

CAUTION

- Do not press the power switch repeatedly.
- The computer will forcibly be turned off if you press and hold the power switch for 4 seconds or longer.
- Once you turn off the computer, wait for 10 seconds or more before you turn on the computer again.
- Do not perform the following operation until the hard disk drive indicator ⛁ turns off.
  - Connecting or disconnecting the AC adaptor
  - Pressing the power switch
  - Touching the screen, external keyboard or external mouse
- When the CPU temperature is high, the computer may not start up to prevent overheating of the CPU. Wait until the computer cools down, and then turn the power on again. If the computer does not power on even after cooling down, contact Panasonic Technical Support.
- Any changes from the default setting of the Setup Utility must not be made until the “Setting up the computer” procedure is completed.

3 Setup Windows.

① Follow the on-screen instructions.

Windows Vista

- After turning on the computer, “Please wait while windows sets up your computer ...” appears, and then a small circle circulates on the screen. This will take a few minutes.
- Setup of Windows will take approximately 20 minutes. Go to the next step, confirming each message on the display.

Windows XP

- Touch screen operation cannot be used until the “Setup windows” procedure is completed. Use the external keyboard and mouse.

CAUTION

Windows Vista

- You cannot choose the following words for user name and password: CON, PRN, AUX, CLOCK$, NUL, COM1 to COM9, LPT1 to LPT9.
- You can change the user name, password, image and security setting after setup of Windows.
- Remember your password. If you forget the password, you cannot use the Windows.

Creating a password reset disk beforehand is recommended.

- The wallpaper for the first logon user has already been set on "**4** Setup Windows." . When using this computer under the sun, the screen becomes easily viewable by changing the wallpaper to the white wallpaper.
  ① Right-click on the desktop, and click [Personalize] - [Desktop Background].
  ② Select [Solid Colors] at [Location].
  ③ Select the white wallpaper and click [OK].

Windows XP

- When you set date/time/time zone and click [Next], the screen may not go to the next step for a few minutes. Do not touch the screen, the keyboard, the mouse and wait until the screen changes.
- If "An unexpected error has occurred…" (or a similar message) is displayed, click [OK]. This is not a malfunction.
- Wait until the hard disk drive indicator has turned off.

4 Perform the touchscreen calibration.

- To calibrate the touchscreen, do not use the digitizer pen (included). Use your finger or other objects.
- Before performing the calibration, close Tablet PC Input Panel.

Windows Vista

① Click (Start) - [Control Panel] - [Mobile PC] - [Tablet PC Settings].
② Click [Calibrate].
③ Touch each of the 4 "+" target marks one by one, and then click [OK].

Windows XP

① Click [start] - [All Programs] - [InPlay] - [Calibration].
② Touch each of the 9 "+" target marks one by one, and the click [OK].

NOTE

- You can also calibrate the digitizer, if you need. (➔ *Reference Manual* "Touch Screen Operation")

Windows XP

5 Create a new account.

① Click [start] - [Control Panel] - [User Accounts] - [Create a new account].

CAUTION

- Remember your password. If you forget the password, you cannot use the Windows. Creating a password reset disk beforehand is recommended.

NOTE

- **PC Information Viewer**
  This computer periodically records the management information of the hard disk, etc. The maximum data volume for each record is 1024 bytes. This information is only used for estimating the cause when the hard disk goes down by any possibility. They are never sent to outside via network nor used for any other purpose except for the purpose described the above.
  To disable the function, add the check mark for [Disable the automatic save function for management information history] in [Hard Disk Status] of PC Information Viewer, and click [OK].
  (➔ *Reference Manual* "Checking the Computer's Usage Status")

■ **Precaution against Starting Up/Shutting Down**

- Do not do the following
  - Connecting or disconnecting the AC adaptor
  - Pressing the power switch
  - Touching the screen or external mouse

■ **Precaution against Logging on to Windows**

- Do not log on to Windows by the Guest account.

Windows Vista

■ **To change the partition structure**

You can shrink a part of an existing partition to create unallocated drive space, from which you can create a new partition. This computer has a single partition in the default setting.

① Click (Start) and right-click [Computer], then click [Manage].
- A standard user needs to enter an administrator password.

② Click [Disk Management].

③ Right-click the partition for Windows (“c” drive in the default setting), and click [Shrink Volume].
- The partition size depends on the computer specifications.

④ Input the size in [Enter the amount of space to shrink in MB] and click [Shrink].
- You cannot input a larger number than the displayed size.

⑤ Right-click [Unallocated] (the shrunk space in the step ④) and click [New Simple Volume].

⑥ Follow the on-screen instructions to make the settings, and click [Finish].
Wait until formatting is completed.

NOTE

- You can create an additional partition using remaining unallocated space or newly creating unallocated space.
- To delete a partition, right-click the partition and click [Delete Volume] in the step ③.

Windows XP

■ **Hard Disk Backup/Restore**

- Use the commercial software to backup the entire data on the hard disk drive.

On-screen Manual

You can access the Reference Manual and the Important Tips on the computer screen.
When you access the Reference Manual and the Important Tips for the first time, the License Agreement of the Adobe Reader may be displayed. Read it carefully and select [Accept] to proceed.

■ Reference Manual

The Reference Manual contains the practical information to help you fully enjoy the computer's performance.

To access the Reference Manual:

Windows Vista

① Double-click on the desktop.

- Alternatively click (Start) - [All Programs] - [Panasonic] - [On-Line Manuals] - [Reference Manual] or press [A2] button to start Panasonic Dashboard, then click [Reference Manual].

Windows XP

① Click [start] - [Reference Manual].

- Alternatively press [A2] button to start Panasonic Dashboard, then click [Reference Manual].

■ Important Tips

The Important Tips will provide you with the battery information so that you can use the battery pack in the optimum condition to obtain longer operation time.

To access the Important Tips:

Windows Vista

① Double-click on the desktop.

- Alternatively click (Start) - [All Programs] - [Panasonic] - [On-Line Manuals] - [Important Tips].

Windows XP

① Double-click on the desktop.

- Alternatively click [start] - [All Programs] - [Panasonic] - [Battery] - [Important Tips] or click [start] - [All Programs] - [Panasonic] - [On-Line Manuals] - [Important Tips].

NOTE

- When Adobe Reader update notice is displayed, we recommend you follow the on-screen procedure and update. See http://www.adobe.com/ for the latest version of Adobe Reader.

Handling and Maintenance

Operation environment

- Temperature: Operation : 5 °C to 35 °C {41 °F to 95 °F}
  Storage : -20 °C to 60 °C {- 4 °F to 140 °F}
  Humidity: Operation : 30% to 80% RH (No condensation)
  Storage : 30% to 90% RH (No condensation)
  Even within the above temperature/humidity ranges, using for a long time in an extreme environment will result in the product deterioration and will shorten the product life.
- Do not place the computer in the following areas, otherwise the computer may be damaged.
  - Near electronic equipment. Image distortion or noise may occur.
  - In extremely high or low temperature.
- As the computer can become hot during operation, keep it away from items that are sensitive to heat.

Handling cautions

This computer is designed to minimize shock to parts such as the LCD and the hard disk drive, but no warranty is provided against any trouble caused by shock. Be extremely careful when handling the computer.

- When carrying the computer:
  - Turn off the computer.
  - Do not drop or hit the computer against solid objects.
  - Do not grip the display part.
- When you board an airplane, take the computer with you and never put it in your checked luggage. When using the computer on airplane, follow the airline's instructions.
- When carrying a spare battery, put it in a plastic bag to protect its terminals.
- Be careful of computer drop resulting from the hand strap damage.
- Use only the included digitizer pen to touch the screen. Do not place any object on its surface and do not press down strongly with sharp-pointed or hard objects that may leave marks (e.g., nails, pencils and ball point pens).
- Do not use the digitizer pen when dust or dirt (e.g., oil) is on the screen. Otherwise foreign particles on the screen or digitizer pen can scratch the screen surface or obstruct the operation.
- Use the digitizer pen only for touching the screen. Using it for any other purpose may damage the digitizer pen and result in scratches on the screen.

■ Preventing your computer from unauthorized use via wireless LAN/Bluetooth/Wireless WAN

- Before using wireless LAN/Bluetooth/Wireless WAN, make the appropriate security settings such as data encryption.

■ Computrace® Software

Computrace® software tracks your stolen computer.

- Computrace® software is not included or installed in this computer.
- Refer to the following URL for Computrace® software for installation and available service regions. Note that this service is only available in certain regions. http://www.absolute.com

NOTE

- Consult Absolute Software Corp. before disposal.

Maintenance

To clean the computer

Wipe with a soft dry cloth such as gauze. If needed, use alcohol cleaning agent to clean the computer.

CAUTION

- Do not use ester contained agent, strong alkaline agent, benzene or thinner since it may adversely affect the surface causing discoloration, etc. Do not use commercially-available household cleaners and cosmetics, as they may contain components harmful to the surface.
- Do not apply water or detergent directly to the computer, since liquid may enter inside of the computer and cause malfunction or damage.

Reinstalling Software

Reinstalling software will return the computer to the default condition. When you reinstall the software, the hard disk data will be erased.
Back up important data to other media or an external hard disk before reinstallation.

Preparation

- Prepare the following items:
  - The Product Recovery DVD-ROM (included)
  - Product Recovery DVD-ROM Windows Vista® Business SP1
  - Panasonic USB CD/DVD drive (optional) (refer to recent catalogs and other sources for information about the products available)
  - Cradle (optional): Model No. CF-VEBH11U
  - External keyboard
  - Mouse
- Remove all peripherals (except for the external keyboard, mouse and CD/DVD drive).
- Connect the AC adaptor to the Cradle and do not remove it until reinstallation is complete.

■ **Reinstalling Windows Vista**

1 Turn off the computer and set the computer to the Cradle.

2 Connect the CD/DVD drive and an external keyboard to the USB port.

3 Turn on the computer, and press F2 or Del while [Panasonic] boot screen is displayed.

The Setup Utility starts up.

- If the password is requested, enter the Supervisor Password.

4 Write down all of the contents of the Setup Utility and press F9.

At the confirmation message, select [Yes] and press Enter.

5 Press F10.

At the confirmation message, select [Yes] and press Enter.
The computer will restart.

6 Press F2 or Del while [Panasonic] boot screen is displayed.

The Setup Utility starts up.

- If the password is requested, enter the Supervisor Password.

7 Set the Product Recovery DVD-ROM into the CD/DVD drive.

8 Select the [Exit] menu, then select your CD/DVD drive in [Boot Override].

9 Press Enter.

The computer will restart.

10 Click [Reinstall Windows] and click [Next].

The License Agreement screen appears.

11 Click [Yes, I agree to the provisions above and wish to continue!] and click [Next].

12 Select the settings and click [Next].

- [Reinstall Windows to the whole Hard Disk to factory default.]
  You will have a single partition.
- [Reinstall Windows to the operating system partition.]
  You can keep the partition structure.

13 At the confirmation message, click [YES].

Reinstallation starts automatically. (It will take approximately 50 minutes.)

- Do not interrupt reinstallation, for example by turning off the computer or pressing Ctrl + Alt + Del.
  Otherwise reinstallation may become unavailable as Windows may not start up or the data may be corrupted.

14 Remove the Product Recovery DVD-ROM, and then click [OK] to turn off the computer, then remove the CD/DVD drive.

15 Turn on the computer.

- If the password is requested, enter the Supervisor Password.

16 Perform the steps 3 to 4 for setting up the computer (➔ pages 13 to 14).

17 Start the Setup Utility and change the settings as necessary.

18 Perform Windows Update.

Troubleshooting (Basic)

Follow the instructions below when a problem has occurred. There is also an advanced troubleshooting guide in the "Reference Manual". For a software problem, refer to the software's instruction manual. If the problem persists, contact Panasonic Technical Support. You can also check the computer's status in the PC Information Viewer (➔ *Reference Manual* "Checking the Computer's Usage Status").

- When operating the computer with the keyboard, you need to set the computer to the Cradle and connect the external keyboard and AC adaptor to the Cradle.

■ **Starting Up**

Cannot start up. The power indicator or battery indicator is not lit.	● Connect the AC adaptor. ● Insert a fully charged battery. ● Remove the battery pack and the AC adaptor, then connect them again. ● If a device is connected to the USB port, disconnect the device, or set [Legacy USB Support] to [Disabled] in the [Advanced] menu of the Setup Utility. (➔ *Reference Manual* "Setup Utility")
Cannot turn on the computer. The computer does not resume from sleep (Windows Vista) /standby (Windows XP). (The power indicator blinks quickly in green.)	● Leave it in an environment of 5 °C {41 °F} to 35 °C {95 °F} for about an hour, then turn on the power again.
You have forgotten the password.	● Supervisor Password or User Password: Contact Panasonic Technical Support. ● Administrator password: • If you have a password reset disk, you can reset the administrator password. Set the disk and enter any wrong password, then follow the on-screen instructions and set a new password. • If you do not have a password reset disk, reinstall (➔ page 18) and set up Windows, and then set a new password.
"Remove disks or other media. Press any key to restart" or a similar message appears.	● If a device is connected to the USB port, disconnect the device, or set [Legacy USB Support] to [Disabled] in the [Advanced] menu of the Setup Utility. (➔ *Reference Manual* "Setup Utility") ● If the problem persists after having tried the above solutions, it may be a hard disk failure. Contact Panasonic Technical Support.
Windows startup and operation is slow.	● Press F9 in the Setup Utility (➔ *Reference Manual* "Setup Utility") to return the Setup Utility settings (excluding the passwords) to the default values. Start the Setup Utility and make the settings again. (Note that the processing speed depends on the application software, so this procedure may not make Windows faster.) ● If you installed a resident software after purchase, turn off the residence. **Windows Vista** ● Disable the pop-up menu and Input Panel Tab. ① Open the Input Panel, and click [Tools] - [Options] - [Opening]. ② Remove the check mark of [Show the Input Panel tab] and click [OK]. **Windows XP** ● Disable Indexing Service in the following menu. Click [start] - [Search] - [Change preferences] - [With Indexing Service (for faster local service)].
The date and time are incorrect.	● Make the correct settings. **Windows Vista** Click (Start) - [Control Panel] - [Clock, Language, and Region] - [Date and Time]. **Windows XP** Click [start] - [Control Panel] - [Date, Time, Language, and Regional Options] - [Date and Time]. ● If the problem persists, the internal clock battery may need to be replaced. Contact Panasonic Technical Support. ● When the computer is connected to LAN, check the date and time of the server. ● The 2100 A.D. or later year will not be correctly recognized on this computer.

■ **Starting Up**

[Executing Battery Recalibration] screen appears.	● The Battery Recalibration was canceled before Windows was shut down last time. To start up Windows, turn off the computer by the power switch, and then turn on.
[Enter Password] does not appear when resuming from sleep (Windows Vista) /standby (Windows XP) or hibernation.	● The password you have set in the Setup Utility is not requested at resuming. To use the password security at resuming, set the Windows password. **Windows Vista** ① Click (Start) - [Control Panel] - [Add or remove user accounts] and select the account, and set the password. ② Click (Start) - [Control Panel] - [System and Maintenance] - [Require a password when the computer wakes] and add a check mark for [Require a password]. **Windows XP** ① Click [start] - [Control Panel] - [User Accounts] and select the account, and set the password. ② Click [start] - [Control Panel] - [Performance and Maintenance] - [Power Options] - [Advanced] and add a check mark for [Prompt for password when computer resumes from standby].
Cannot resume.	● An error may occur when the computer automatically enters the sleep (Windows Vista) / standby (Windows XP) or hibernation mode while the screensaver is active. In this case, turn off the screensaver or change the pattern of the screensaver. ● If you press and hold the power switch for 4 seconds or longer, the power will be turned off forcibly and the computer will not resume. In this case, all unsaved data will be lost. ● You disconnected the AC adaptor and the battery pack while the computer was in sleep (Windows Vista) / standby (Windows XP). If the computer's power supply is disconnected in sleep (Windows Vista) / standby (Windows XP), unsaved data will be lost and the computer will not resume. ● The battery is exhausted. Sleep (Windows Vista) / standby (Windows XP) and hibernation consume some power.
Other startup problems.	● Press **F9** in the Setup Utility (➔ *Reference Manual* "Setup Utility") to return the Setup Utility settings (excluding the passwords) to the default values. Start the Setup Utility and make the settings again. ● Remove all peripheral devices. ● Check to see if there was a disk error. **Windows Vista** ① Remove all peripheral devices including an external display. ② Click (Start) - [Computer] and right-click [Local Disk (C:)], and click [Properties]. ③ Click [Tools] - [Check Now]. • A standard user needs to enter an administrator password. ④ Select the option in [Check disk options] and click [Start]. ⑤ Click [Schedule disk check] and restart the computer. **Windows XP** ① Click [start] - [My Computer] and right-click [Local Disk(C:)], and click [Properties]. ② Click [Tools] - [Check Now]. ③ Select the option in [Check disk options] and click [Start]. ● Start the computer in Safe Mode and check the error details. When the [Panasonic] boot screen disappears[*1] at startup, press and hold **F8** until the Windows Advanced Options Menu is displayed. [*1] When [Password on boot] is set to [Enabled] in the [Security] menu of the Setup Utility, [Enter Password] appears after the [Panasonic] boot screen disappears. As soon as you enter the password and press **Enter**, press and hold **F8**.

■ Shutting down

Windows does not shut down.	● Remove the computer from the Cradle. ● Wait one or two minutes. It is not a malfunction.

■ Display

No display.	● When using an external display, • Check the cable connection. • Turn on the display. • Check the settings of external display. ● The display is turned off by the power-saving function. To resume, do not press the direct selection keys, but press any other key like **Ctrl**. ● The computer entered sleep (Windows Vista) / standby (Windows XP) or hibernation by the power-saving function. To resume, press the power switch. Windows XP ● The screen may not be displayed even after the computer resumed from standby or hibernation. In this case, press the power switch to enter standby and resume the computer again.
The screen is dark.	● The screen might be darker when the AC adaptor is not connected. Adjust the brightness by using Panasonic Dashboard. As you increase the brightness, battery consumption increases. You can separately set the brightness for when the AC adaptor is connected and when not connected.
The screen is disordered.	● Changing the number of display colors and resolution may affect the screen. Restart the computer. ● Connecting/disconnecting an external display may affect the screen. Restart the computer.
During Simultaneous display, one of the screens becomes disordered.	● Simultaneous display cannot be used until Windows startup is complete (during Setup Utility, etc.). ● When using the Extended Desktop, use the same display colors for the external display as those used by the LCD. ● If you continue to experience problems, try changing the display. Right-click on the desktop, and click [Graphics Properties] - [Display Devices].
The external display does not work normally.	● If the external display does not support the power saving function, it may not work normally when the computer enters the power saving mode. Turn off the external display.
Windows Vista When the computer starts up, simultaneous display becomes active.	● When simultaneous display is activated, run Panasonic Dashboard (➔ *Reference Manual* “Panasonic Dashboard”) to switch the display.
Windows Vista <Only for model with GPS> The cursor cannot be controlled properly.	● Operate the following steps. ① Set [GPS] to [Disabled] in the [Advanced - Serial Port Configuration] of the Setup Utility. ② Press **F10** and select [Yes] at the confirmation message, and press **Enter**. The computer will restart. ③ Log on to Windows as an administrator. ④ Click (Start) and input “c:\util\drivers\gps\GPSVista.reg” in [Start Search], and press (Enter). ⑤ Click [Yes] and click [OK]. The computer will restart. ⑥ Press **F2** or **Del** while [Panasonic] boot screen is displayed. ⑦ Set [GPS] to [Enabled] in the [Advanced - Serial Port Configuration]. ⑧ Press **F10** and select [Yes] at the confirmation message, and press **Enter**.

■ Touch Screen Operation

The cursor does not work.	● When using the external mouse, connect it correctly. ● Restart the computer using the keyboard. **Windows Vista** Press (Windows) and press three times, and press to select [Restart] and press (Enter). **Windows XP** Press (Windows), **U** and **R** to select [Restart]. ● If the computer does not respond to keyboard commands, read “No response.” (➔ below).
Cannot point the correct position.	● Perform the touchscreen calibration (➔ page 14).

■ Reference Manual

The Reference Manual is not displayed.	● Install Adobe Reader. ① Log on to Windows as an administrator. ② **Windows Vista** Click (Start) and input “c:\util\reader\setup.exe” in [Start Search] then press **Enter**. **Windows XP** Click [start] - [Run], input “c:\util\reader\setup.exe”, then click [OK]. Follow the on-screen instructions. ③ Update Adobe Reader to its latest version. If your computer is connected to the internet, start up Adobe Reader and click [Help] - [Check for Updates].
Cannot close full screen mode of Adobe Reader.	● Click [Edit] - [Preferences] - [Full Screen] and add the check mark to [Show navigation bar] before starting full screen mode. ● If you started full screen mode without above setting, set the computer to the Cradle and connect the external keyboard to the Cradle, then press **Esc**.

■ Others

No response.	● Press[ ] button to open Task Manager and close the software application that is not responding. ● An input screen (e.g., password input screen at startup) may be hidden behind another window. Press **Alt** + **Tab** to check. ● Press the power switch for 4 seconds or longer to shut down the computer, and then press the power switch to turn it on. If the application program does not work normally, uninstall and reinstall the program. To uninstall: **Windows Vista** Click (Start) - [Control Panel] - [Uninstall a program]. **Windows XP** Click [start] - [Control Panel] - [Add or Remove Programs].
The battery indicator lights in red.	● Connect the AC adaptor to charge the battery. The computer may not enter hibernation, even if [Hibernate] is selected as the action when the battery level becomes low.

LIMITED USE LICENSE AGREEMENT

THE SOFTWARE PROGRAM(S), INCLUDING, BUT NOT LIMITED TO INTEL SOFTWARE PRODUCT, (“PROGRAMS”) FURNISHED WITH THIS PANASONIC® PRODUCT (“PRODUCT”) ARE LICENSED ONLY TO THE END-USER (“YOU”), AND MAY BE USED BY YOU ONLY IN ACCORDANCE WITH THE LICENSE TERMS DESCRIBED BELOW. YOUR USE OF THE PROGRAMS SHALL BE CONCLUSIVELY DEEMED TO CONSTITUTE YOUR ACCEPTANCE OF THE TERMS OF THIS LICENSE.
Panasonic Corporation has developed or otherwise obtained the Programs and hereby licenses their use to you. You assume sole responsibility for the selection of the Product (including the associated Programs) to achieve your intended results, and for the installation, use and results obtained therefrom.

LICENSE

A. Panasonic Corporation hereby grants you a personal, non-transferable and non-exclusive right and license to use the Programs in accordance with the terms and conditions stated in this Agreement. You acknowledge that you are receiving only a LIMITED LICENSE TO USE the Programs and related documentation and that you shall obtain no title, ownership nor any other rights in or to the Programs and related documentation nor in or to the algorithms, concepts, designs and ideas represented by or incorporated in the Programs and related documentation, all of which title, ownership and rights shall remain with Panasonic Corporation or its suppliers. You acknowledge that the Programs are protected by copyright laws and international treaties.

B. You may use the Programs only on the single Product which was accompanied by the Programs.

C. You and your employees and agents are required to protect the confidentiality of the Programs. You may not distribute or otherwise make the Programs or related documentation available to any third party, by time-sharing or otherwise, without the prior written consent of Panasonic Corporation.

D. You may not copy or reproduce, or permit to be copied or reproduced, the Programs or related documentation for any purpose, except that you may make one (1) copy of the Programs for backup purposes only in support of your use of the Programs on the single Product which was accompanied by the Programs. You shall not modify, or attempt to modify, the Programs.

E. You may transfer the Programs and license them to another party only in connection with your transfer of the single Product which was accompanied by the Programs to such other party. At the time of such a transfer, you must also transfer all copies, whether in printed or machine readable form, of every Program, and the related documentation, to the same party or destroy any such copies not so transferred.

F. You may not remove any copyright, trademark or other notice or product identification from the Programs and you must reproduce and include any such notice or product identification on any copy of any Program.

YOU MAY NOT REVERSE ASSEMBLE, REVERSE COMPILE, OR MECHANICALLY OR ELECTRONICALLY TRACE THE PROGRAMS, OR ANY COPY THEREOF, IN WHOLE OR IN PART.

YOU MAY NOT USE, COPY, MODIFY, ALTER, OR TRANSFER THE PROGRAMS OR ANY COPY THEREOF, IN WHOLE OR IN PART, EXCEPT AS EXPRESSLY PROVIDED IN THE LICENSE.

IF YOU TRANSFER POSSESSION OF ANY COPY OF ANY PROGRAM TO ANOTHER PARTY, EXCEPT AS PERMITTED IN PARAGRAPH E ABOVE, YOUR LICENSE IS AUTOMATICALLY TERMINATED.

TERM

This license is effective only for so long as you own or lease the Product, unless earlier terminated. You may terminate this license at any time by destroying, at your expense, the Programs and related documentation together with all copies thereof in any form. This license will also terminate effective immediately upon occurrence of the conditions thereof set forth elsewhere in this Agreement, or if you fail to comply with any term or condition contained herein. Upon any such termination, you agree to destroy, at your expense, the Programs and related documentation together with all copies thereof in any form.
YOU ACKNOWLEDGE THAT YOU HAVE READ THIS AGREEMENT, UNDERSTAND IT AND AGREE TO BE BOUND BY ITS TERMS AND CONDITIONS. YOU FURTHER AGREE THAT IT IS THE COMPLETE AND EXCLUSIVE STATEMENT OF THE AGREEMENT BETWEEN US, WHICH SUPERSEDES ANY PROPOSAL OR PRIOR AGREEMENT, ORAL OR WRITTEN, AND ANY OTHER COMMUNICATIONS BETWEEN US, RELATING TO THE SUBJECT MATTER OF THIS AGREEMENT.

GOVERNMENT RESTRICTED RIGHTS.

The Software is provided with “RESTRICTED RIGHTS.” Use duplication or disclosure by the government is subject to restrictions as set forth in FAR52.227-14 and DFAR252. 227-7013 et seq. or their successors.

Use of the Software by the government constitutes acknowledgement of Intel’s proprietary rights therein.

Contractor or Manufacturer is Intel Corporation, 2200 Mission College Blvd., Santa Clara, CA 95052.

U.S. GOVERNMENT RESTRICTED RIGHTS:

The software and documentation are “commercial items” as that terms is defined at 48 C.F.R. 2.101, consisting of “commercial computer software” and “commercial computer software documentation” as such terms are used in 48 C.F.R. 12.212 Consistent with 48 C.F.R. 12.212 and 48 C.F.R. 227.7202-I through 227. 7202-4, all U.S. Government and users acquire the software and documentation with only those rights set forth herein.

Manufacture is identified in the copyright statement on the software.

Specifications

This page provides the specifications for the basic model.
The model number is different according to the unit configuration.

- To check the model number:
  Check the bottom of the computer or the box the computer came in at the time of purchase.
- To check CPU speed, memory size and the hard disk drive (HDD) size:
  Run the Setup Utility (➔ *Reference Manual* "Setup Utility") and select [Information] menu.
  [Processor Speed]: CPU speed, [Memory Size]: Memory size, [Hard Disk]: Hard disc drive size

■ Main Specifications

Model No.			CF-H1ADBAZJM / CF-H1ADBAZCM
CPU/ Secondary cache memory			Intel® Atom™ Processor Z540 (1.86 GHz, 512 KB*1 cache, 533 MHz FSB)
Chipset			Intel® System Controller Hub
Main Memory			2GB*1 DDR2 SDRAM (2GB*1 Max.)
Video Memory			256 MB*1 Max.*2
Hard Disk Drive			80 GB*3
Display Method			10.4 XGA type (TFT) (1024 × 768 dots) 65,536/16,777,216 colors*4
Wireless LAN			Intel® WiFi Link 5100 (➔ page 27 "Wireless LAN")
Bluetooth™			(➔ page 27 "Bluetooth™")
Sound			WAVE and MIDI playback, Monaural speaker, Intel® High Definition Audio subsystem support
Fingerprint Reader			Array Size: 248×4 pixels, Image Size: 248×360 pixels, Image Resolution: 508 DPI
Camera			Effective pixels: 2.0 Mpixels, reading pixels: Up to 1600×1200 pixels, LED functions: Mounted
Interface			Expansion Bus Connector (Dedicated 19-pin female)
Pointing Device			Touchscreen/Digitizer
Button			Camera, RFID Reader, Barcode Reader*5, Application×3*6 or 2*5
Power Supply			AC adaptor or Battery pack
AC Adaptor*7			Input: 100 V to 240 V AC, 50 Hz/60 Hz, Output: 16.0 V DC, 3.75 A
Battery Pack			Li-ion 7.2 V, 2.9 Ah (typ.), 2.7 Ah (min) x 2 packs
	Operating Time*8		Approx. 6 hours
	Charging Time*9	Power on	Approx. 13 hours
		Power off	Approx. 7 hours
Power Consumption*10			Approx. 18 W*11 / Approx. 30 W (Maximum when recharging in the ON state)
Physical Dimensions (W × D × H) (excluding the hand strap)			264 mm × 34-58 mm × 268 mm {10.4"×1.3"-2.3"×10.6"}
Weight (including the hand strap)			Approx. 1.5 kg {Approx. 3.4 lb.}
Operation Environment			Temperature: 5 °C to 35 °C {41 °F to 95 °F } Humidity: 30% to 80% RH (No condensation)
Storage Environment			Temperature: -20 °C to 60 °C {–4 °F to 140 °F } Humidity: 30% to 90% RH (No condensation)

■ Software

Model No	CF-H1ADBAZJM	CF-H1ADBAZCM
Operating System*12	Windows Vista® Business Service Pack 1	Microsoft® Windows® XP Tablet PC Edition 2005 Service Pack 3
Utility Programs	Adobe Reader, PC Information Viewer, Loupe Utility, Intel® PROSet/Wireless WiFi Connection Utility, Bluetooth™ Stack for Windows® by TOSHIBA, Wireless Switch Utility, Panasonic Hand Writing, Panasonic Dashboard, Application Button Setting Utility, Cleaning Utility, Wireless Connection Disable Utility*13, Display Switch Utility, Battery Recalibration Utility, Infineon TPM Professional Package*13, Protector Suite QL*13, Setup Utility, Hard Disk Data Erase Utility*14, PC-Diagnostic Utility, MCA Platform Driver	

■ Wireless LAN <Only for model with wireless LAN>

Data Transfer Rates	IEEE802.11a: 54/48/36/24/18/12/9/6 Mbps (automatically switched)[*15] IEEE802.11b: 11/5.5/2/1 Mbps (automatically switched)[*15] IEEE802.11g: 54/48/36/24/18/12/9/6 Mbps (automatically switched)[*15] IEEE802.11n: (HT20) 144.4/130/117/115.6/104/86.7/78/65/58.5/57.8/52/43.3/39/28.9/26/19.5/14.4/13/6.5 Mbps (automatically switched)[*15] (HT40) 300/270/243/240/216/180/162/130/120/117/108/104/90/81/78/60/54/52/39/30/27/26/13 Mbps (automatically switched)[*15]
Standards Supported	IEEE802.11a/IEEE802.11b/IEEE802.11g/IEEE802.11n (Draft 2.0)
Transmission method	OFDM system, DS-SS system
Wireless Channels Used	IEEE802.11a: Channels 36/40/44/48/52/56/60/64/100/104/108/112/116/132/136/140/149/153/157/161/165 IEEE802.11b/IEEE802.11g: Channels 1-11 IEEE802.11n: Channels 1-11 /36/40/44/48/52/56/60/64/100/104/108/112/116/132/136/140/149/153/157/161/165
RF Frequency Band	IEEE802.11a: 5.18 GHz - 5.32 GHz, 5.5 GHz - 5.58 GHz, 5.66 GHz - 5.7 GHz, 5.745 GHz - 5.825 GHz IEEE802.11b/IEEE802.11g: 2.412 GHz - 2.462 GHz IEEE802.11n: 2.412 GHz - 2.462 GHz, 5.18 GHz - 5.32 GHz, 5.5 GHz - 5.58 GHz, 5.66 GHz - 5.7 GHz, 5.745 GHz - 5.825 GHz

■ Bluetooth™ <Only for model with Bluetooth>

Bluetooth Version	2.1 + EDR
Transmission method	FHSS system
Wireless Channels Used	Channels 1 to 79
RF Frequency Band	2.402 GHz - 2.48 GHz

*1 1 KB = 1,024 bytes / 1 MB = 1,048,576 bytes / 1 GB = 1,073,741,824 bytes

*2 A segment of the main memory is allotted automatically depending on the computer's operating status. The size of the Video Memory cannot be set by the user. The size of Video memory is allotted depending on the operating system.

*3 1 GB = 1,000,000,000 bytes. Your operating system or some application software will report as fewer GB.

*4 A 16,777,216 color display is achieved by using the dithering function.

*5 Only for model with Barcode reader.

*6 Only for model without Barcode Reader.

*7 <Only for North America>
The AC adaptor is compatible with power sources up to 240 V AC adaptor. This computer is supplied with a 125 V AC compatible AC cord. 20-M-2-1

*8 Measured at LCD brightness: 60 cd/m^2.
Varies depending on the usage conditions, or when an external device is attached.

*9 Varies depending on the usage conditions.

*10 Approx. 0.9 W when the battery pack is fully charged (or not being charged) and the computer is OFF.
Even when the AC adaptor is not connected to the computer, power is consumed (Max. 0.5 W) simply by having the AC adaptor plugged into an AC outlet.

*11 Rated power consumption 23-E-1

*12 Operations of this computer are not guaranteed except for the pre-installed OS and the OS which is installed by using the Product Recovery DVD-ROM provided by Panasonic.

*13 Must be installed before use.

*14 The Product Recovery DVD-ROM is required.

*15 These are speeds specified in IEEE802.11a/b/g/n standards. Actual speeds may differ.

LIMITED WARRANTY

For U.S.A.

Panasonic Computer Solutions Company - Worldwide Product Warranties

Section 1: Limited Warranty - Hardware

Panasonic Computer Solutions Company (referred to as “Panasonic”) will repair the products listed below with new or rebuilt parts, free of charge in the U.S.A. or other Panasonic approved location for the period specified below from the date of original purchase in the event of a defect in materials or workmanship. These warranties are extended solely to the original purchaser. A purchase receipt or other proof of date of original purchase will be required before warranty performance is rendered.

- Laptop Computers – 3 Years
- PDRC - LCD and Keyboard Assemblies – 3 Years
- MDWD – Mobile Computer and Wireless Display Assemblies (CF-07/CF-08) - 3 Years
- Ultra-Mobile PC (CF-U1/CF-H1) – 3 Years
- Hand-held Computers (P1/P2) – 1 Year
- Arbitrator Video Camera – 1 Year
- Arbitrator Recorder Unit – 1 Year
- Arbitrator Remote Control Panel – 1 Year
- Arbitrator Wireless Receiver Unit – 1 Year
- Arbitrator P2 Card(s) (All Sizes) – 1 Year
- Arbitrator Wireless Microphone(s) / Transmitter – 90 Days
- Arbitrator System Component Interconnect Cables – 90 days

Battery Warranty

The battery supplied with the product is covered under the warranty for one (1) year from date of purchase, except as excluded in Section 3. Batteries purchased separately are covered under the warranty for one (1) year from the date of purchase. A battery furnished under the warranty is covered for the remaining period of the one year warranty on the original or purchased battery.

Wireless Module Warranty

Panasonic approved wireless modems installed in Panasonic brand computers and integrated by Panasonic or an Authorized Panasonic Wireless Integrator are covered under the warranty for the remaining warranty period of the computer in which the modem is installed. For computers with less than three (3) months remaining on the unit warranty, the wireless modem will be covered for a period of three (3) months from the date of installation of the modem, covering only modem replacement or modem installation related issues.

All modems must be approved by the wireless carrier prior to use. Any use or attempted use of a wireless modem not approved and activated by the carrier for use on their network is strictly prohibited and is not sanctioned or warranted by Panasonic and may result in legal action. In addition, all modems must be approved by Panasonic as compatible with the computer hardware before installation or use.

Panasonic’s sole responsibility for the warranty or technical support of the software required to install or operate the modem is defined in Section 2 (Limited Software Warranty). Any attempted software installation by anyone other than a Panasonic Authorized Wireless Integrator is not covered under warranty and may result in service charges to re-image or replace the hard drive.

Installation or attempted installation by any party other than Panasonic or an Authorized Panasonic Wireless Integrator is strictly not covered under the warranty and may void the computer warranty if damage results.

Options and Accessories warranties

The below listed Panasonic brand or supplied options and accessories are covered under this limited warranty for the period specified from the date of purchase or as specifically stated:

- AC Adaptor / Power Cord – 3 Years
- Memory Card (Panasonic Brand) – 3 Years
- Car Mount Docking Station PCB or Complete Vehicle Docking Station – 3 Years
- Port Replicator / I-O Box / Device Cradle (like CF-08) – 3 Years
- Antenna Pass-through Cable – 3 Years
- Backlit or Full-sized keyboard - 3 Years or assumes warranty of the unit in which it is installed
- Integrated Panasonic supplied options and kits including, but not limited to Wireless WAN, Media Bay Drives (Floppy, CD/DVD, Combo), Camera, GPS, Bluetooth, Smartcard Reader, Magnetic Card Reader, Barcode Scanner and Fingerprint readers – 3 Years or assumes warranty period of the unit in which it is installed provided the integration was performed by Panasonic or an Authorized Options Integrator.
- Hard Drive (separately purchased) – 1 Year
- External USB Drives (CD / DVD / Floppy / Hard Drive) – 1 Year
- Optional Battery – 1 Year
- Battery Charger / Multi-Bay Battery Charger – 1 Year
- Digitizer pen or stylus – 90 Days (physical damage excluded)

Section 2 - Limited Warranty - Software

Panasonic Computer Solutions Company (referred to as “Panasonic”) warrants to you only that the disk(s) or other media on which the Programs are furnished will be free from defects in material and workmanship under normal use for a period of sixty (60) days from the date of delivery thereof to you, as evidenced by your purchase receipt.

This is the only warranty Panasonic makes to you. Panasonic does not warrant that the functions contained in the Programs will meet your requirements or that the operation of the Programs will be uninterrupted or error free. Panasonic shall have no obligation for any defects in the disk(s) or other media on which the Programs are furnished resulting from your storage thereof, or for defects that have been caused by operation of the disk(s) or other media

Panasonic’s entire liability and your exclusive remedy under this warranty shall be limited to the replacement, in the United States or other Panasonic designated location, of any defective disk or other media which is returned to Panasonic’s Authorized Service Center, together with a copy of the purchase receipt, within the aforesaid warranty period. The customer is responsible for ensuring that all data is backed up and made secure during normal use and before sending a unit for service.

Section 3 - Limited Warranty Exclusions

Specifically excluded from the warranty are:

- All consumable items; such as screen protection films, logo badges, labels, cleaning cloths, carry cases, manuals, cables, straps, belts, holsters, tethers, and harnesses and any other options and accessories not listed above or covered under a separate warranty.
- Failures related to the product operating system, hard drive image, software setup, software program, virus, other program(s) or file(s) on the hard drive or in any computer memory location.
- Failures due to BIOS settings or changes, as well as any cosmetic or physical damage to the unit.
- Any unit or device with a missing or altered model number or serial number label
- Damage which occurs in shipment
- Failures which are caused by products not supplied by Panasonic
- Failures which result from alteration, accident, misuse, introduction of liquid or other foreign matter into the unit, abuse, neglect, installation, maladjustment of consumer controls, improper maintenance or modification, use not in accordance with product use instructions
- Failures due to service by anyone other than a Panasonic Authorized Service Provider
- Failures caused by improper integration by any company other than Panasonic or a Panasonic Authorized Integrator.
- Damage, failure, or loss due to the unit being stolen, lost, misplaced, or used by anyone other than the original purchaser
- Damage that is attributable to acts of God

This warranty only covers failures due to defects in materials or workmanship which occur during normal use.

THIS PRODUCT IS NOT INTENDED FOR USE AS, OR AS PART OF, NUCLEAR EQUIPMENT/SYSTEMS, AIR TRAFFIC CONTROL EQUIPMENT/SYSTEMS, OR AIRCRAFT COCKPIT EQUIPMENT/SYSTEMS[*1]. PANASONIC WILL NOT BE RESPONSIBLE FOR ANY LIABILITY RESULTING FROM THE USE OF THIS PRODUCT ARISING OUT OF THE FOREGOING USES.

[*1] AIRCRAFT COCKPIT EQUIPMENT/SYSTEMS include Class2 Electrical Flight Bag (EFB) Systems and Class1 EFB Systems when used during critical phases of flight (e.g., during take-off and landing) and/or mounted on to the aircraft. Class1 EFB Systems and 2 EFB Systems are defined by FAA: AC (Advisory Circular) 120-76A or JAA: JAA TGL (Temporary Guidance Leaflets) No.36

Other Limits and Exclusions: There are no other express warranties except as listed above.

PANASONIC SHALL NOT BE LIABLE FOR LOSS OF DATA OR OTHER INCIDENTAL OR CONSEQUENTIAL DAMAGES RESULTING FROM THE USE OF THIS PRODUCT, OR ARISING OUT OF ANY BREACH OF THIS WARRANTY. ALL EXPRESS AND IMPLIED WARRANTIES, INCLUDING THE WARRANTIES OF MERCHANTABILITY AND FITNESS FOR A PARTICULAR PURPOSE ARE LIMITED TO THE APPLICABLE WARRANTY PERIOD SET FORTH ABOVE. Some states do not allow the exclusion or limitation of incidental or consequential damages, or limitations on how long an implied warranty lasts, so the above limitations or exclusions may not apply to you.

This limited warranty gives you specific legal rights, and you may also have other rights which vary from state to state.

For technical support or to arrange for service on your Panasonic computer product, call our toll-free 24 hours hotline at 1-800-LAPTOP5.

DIAL TOLL FREE: 1-800-LAPTOP5 (1-800-527-8675)
Web Site : www.panasonic.com/toughbook

LIMITED WARRANTY

For Canada

PANASONIC COMPUTER AND PERIPHERALS LIMITED WARRANTY

Coverage – Panasonic Canada Inc. ("PCI") warrants to you, the first end user customer, this computer product (excluding software media), when purchased from PCI or from a PCI authorized reseller, to be free from defects in materials and workmanship under normal use, subject to the terms set forth below, during the period of warranty coverage specified.

Scope of Coverage	Period of Coverage	Type of Failure Coverage
• Laptop Computers (except Battery) and AC Adaptor • Factory/PCI installed options including Wireless WAN, GPS, Bluetooth, Finger print reader, Backlit keyboard, Memory Card and Media Bay Drives (Floppy, CD/DVD) • Mobile Wireless Display • PDRC – LCD and Keyboard Assemblies • Port Replicator	Three (3) Years from Date of Original End User Customer Purchase	Defective Materials or Workmanship
• Hand-held Computers • Battery • Battery charger • Auto Adaptor • External USB Drives	One (1) Year from Date of Original End User Customer Purchase	Defective Materials or Workmanship
• Digitizer pen or stylus	Ninety (90) Days from Date of Original End User Customer Purchase	Defective Materials or Workmanship
• All consumable items including protection film, cleaning cloth, carry case, tether and harness	No Coverage	

Remedy – In the event of a warranty claim, contact PCI's representatives within the applicable warranty period, identifying the nature of the defect claimed, at 1-800-668-8386 between 9:00 A.M. and 5:00 P.M., Eastern Time Zone, Mon. – Fri. (excluding holidays) for instructions on how to obtain service. A purchase receipt or other proof of date of original purchase is required before warranty service is performed. Defective parts covered by this Limited Warranty will be repaired or replaced with new or comparable rebuilt parts on an exchange basis. Warranty replacement or repair is subject to the terms of this Limited Warranty for the balance of the original period of warranty coverage.

No Coverage – This Limited Warranty does not cover products purchased outside Canada. Neither does it cover damage to, failure of, or defects in a product or accessory through mishandling, improper installation, abnormal use, misuse, neglect, accident, introduction of liquid or other foreign matter into the product, alteration or servicing by anyone not authorized by PCI, or act of God. THIS PRODUCT IS NOT INTENDED FOR USE AS, OR AS PART OF, NUCLEAR EQUIPMENT/SYSTEMS, AIR TRAFFIC CONTROL EQUIPMENT/SYSTEMS, OR AIRCRAFT COCKPIT EQUIPMENT/SYSTEMS*2. PANASONIC WILL NOT BE RESPONSIBLE FOR ANY LIABILITY RESULTING FROM THE USE OF THIS PRODUCT ARISING OUT OF THE FOREGOING USES.

*2 AIRCRAFT COCKPIT EQUIPMENT/SYSTEMS include Class2 Electrical Flight Bag (EFB) Systems and Class1 EFB Systems when used during critical phases of flight (e.g., during take-off and landing) and/or mounted on to the aircraft. Class1 EFB Systems and 2 EFB Systems are defined by FAA: AC (Advisory Circular) 120-76A or JAA: JAA TGL (Temporary Guidance Leaflets) No.36

IF YOU SHIP THE PRODUCT FOR WARRANTY SERVICE

Carefully pack the product, preferably in the original carton. Include details of defect claimed and proof of date of original purchase. No liability is assumed for loss or damage to the product while in transit, if you chose your own transportation carrier.

SOFTWARE MEDIA LIMITED WARRANTY

Coverage – PCI warrants to you, the first end user customer, that the disk(s) or other media on which software program(s) is/are supplied will be free from defects in materials and workmanship under normal use in Canada for a period of sixty (60) days from date of receipt as evidenced by your purchase receipt for your Panasonic Computer product.

THIS IS THE ONLY WARRANTY THAT PCI MAKES RESPECTING THE SOFTWARE MEDIA. PCI does not warrant the software. Please refer to the software licensor's written warranty (accompanying the copy of the software) for any software warranty claim.

Claim Procedure – In the event of a defect in material or workmanship in the media during the sixty (60) day warranty period, and you return it, transportation costs prepaid, to Panasonic Canada Inc., Computer Products Marketing, 5770 Ambler Drive, Mississauga, Ontario L4W 2T3, within the warranty period, together with a copy of your purchase receipt, and an explanation of the suspected defect, PCI will replace in Canada the defective disk(s) or other media.

Remedy – PCI's entire liability, and your only remedy for any breach of this software media warranty is limited to replacement of the media only. It does not cover any other damages, including, but not limited to, loss of use or profit loss, or special, indirect or consequential damages, or other claims, whether or not of similar character.

No Coverage – This limited warranty does not apply if the disk(s) or other media has been used in other than a Panasonic product, or in environmental conditions other than those specified by PCI or the manufacturer, or if subjected to misuse, neglect, mishandling, modification or attempted modification of the program, or if damaged by accident or act of God. PCI is not responsible for damage to or loss of any program, data or removable storage media.

GENERAL

NO OTHER WARRANTIES – PCI DISCLAIMS ALL OTHER WARRANTIES, EITHER EXPRESS OR IMPLIED, INCLUDING, BUT NOT LIMITED TO, IMPLIED WARRANTIES OF MERCHANTABILITY AND FITNESS FOR A PARTICULAR PURPOSE, WITH RESPECT TO THE SOFTWARE, SOFTWARE MEDIA, COMPUTER PRODUCT, OPTIONS AND ACCESSORIES.

NO LIABILITY FOR CONSEQUENTIAL DAMAGES – IN NO EVENT SHALL PCI BE LIABLE FOR ANY SPECIAL, INDIRECT OR CONSEQUENTIAL DAMAGES ARISING FROM ANY BREACH OF THE LIMITED WARRANTIES SET OUT IN THIS DOCUMENT, OR FROM THE USE OF THE COMPUTER PRODUCT, INCLUDING, WITHOUT LIMITATION, LOSS OF DATA, BUSINESS, PROFIT OR GOODWILL.

IN ANY EVENT, PCI'S MAXIMUM LIABILITY FOR ANY BREACH SHALL NOT EXCEED THE AMOUNT ACTUALLY PAID BY YOU FOR THE COMPUTER PRODUCT.

NO ACTION, REGARDLESS OF ITS BASIS, MAY BE BEGUN AGAINST PCI MORE THAN TWO (2) YEARS AFTER THE CAUSE OF ACTION AROSE.

Statutory Warranties – Some jurisdictions do not allow these limitations or exclusions, so they may not apply to you.

Pour le Canada

GARANTIE LIMITÉE – ORDINATEURS ET PÉRIPHÉRIQUES PANASONIC

Couverture – Panasonic Canada Inc. (« PCI ») garantit à l'acheteur original que ce produit informatique (à l'exclusion des supports des logiciels) est, au moment de sa vente par PCI ou d'un revendeur agréé par PCI, exempt de défauts de pièces et de fabrication dans les conditions normales d'utilisation, et ce, pendant la période de couverture de la garantie, sous réserve des modalités décrites ci-dessous.

Éléments couverts	Durée de couverture	Type de couverture
• Ordinateurs blocs-notes (sauf batteries) et adaptateur secteur • Options installées en usine/par PCI incluant : WAN sans fil, GPS, Bluetooth, lecteur d'empreintes digitales, clavier rétroéclairé, carte mémoire et lecteurs (disquettes, CD/DVD) • Écran mobile sans fil • Ensembles PDRC – ACL et clavier • Duplicateur de port	Trois (3) ans à partir de la date d'achat original.	Défauts de pièces et de fabrication
• Ordinateurs de poche • Batterie • Chargeur de batterie • Adaptateur pour voiture • Périphériques USB	Un (1) an à partir de la date d'achat original.	Défauts de pièces et de fabrication
• Stylo pointeur standard ou pour numériseur graphique	Quatre-vingt-dix (90) jours à partir de la date d'achat original.	Défauts de pièces et de fabrication
• Tous les articles consommables incluant les pellicules protectrices, chiffons de nettoyage, étuis de transport, longes et sangles	Aucune couverture	

Recours – Pour obtenir des informations sur la marche à suivre dans le cas où une réclamation en vertu de la garantie deviendrait nécessaire, communiquez par téléphone avec un représentant de PCI au 1-800-668-8386, entre 9h00 et 17h00 (heure de l'Est) du lundi au vendredi (sauf les jours fériés), avant l'échéance de la garantie applicable, en prenant soin d'identifier la nature de la défaillance.
Un reçu ou toute autre pièce justificative de la date d'achat original sera exigé avant toute réparation. Toute pièce défectueuse couverte par la présente garantie limitée sera réparée ou remplacée par une pièce neuve ou remise à neuf. Le remplacement ou la réparation sera fait conformément aux modalités de la présente garantie limitée pendant la durée restante de la période originale de la garantie.
Produits non couverts – La présente garantie limitée ne couvre pas les produits achetés à l'extérieur du Canada. Elle ne couvre pas non plus les dommages, la défaillance ou les défauts attribuables à une manutention inadéquate, une mauvaise installation, une utilisation anormale ou abusive, de la négligence, un accident, un déversement ou la pénétration d'un objet étranger, une modification, un cas fortuit ou une réparation effectuée par une personne non agréée par PCI.
CE PRODUIT N'EST PAS DESTINÉ À ÊTRE UTILISÉ, EN TOUT OU EN PARTIE, COMME SYSTÈME/ÉQUIPEMENT NUCLÉAIRE, SYSTÈME/ ÉQUIPEMENT DE CONTRÔLE DU TRAFFIC AÉRIEN OU SYSTÈME/ÉQUIPEMENT DE POSTE DE PILOTAGE D'AVION[*3].
PANASONIC DÉCLINE TOUTE RESPONSABILITÉ CONCERNANT L'UTILISATION DE CE PRODUIT DANS LES CAS SUSMENTIONNÉS.

[*3] Les SYSTÈMES/ÉQUIPEMENTS DE POSTE DE PILOTAGE D'AVION sont dotés de systèmes OEPP (organiseur électronique de poste de pilotage) de classe 2 et de classe 1 utilisés pendant des phases critiques de vol (par exemple, pendant le décollage et l'atterrissage) et(ou) montés sur l'avion. Les systèmes OEPP de classe 1 et de classe 2 sont définis par le circulaire d'information FAA: AC (Advisory Circular) 120-76A ou le feuilet n° 36 JAA: JAA TGL (Temporary Guidance Leaflets) No 36.

EXPÉDITION DU PRODUIT POUR SERVICE SOUS GARANTIE

Emballez soigneusement le produit, de préférence dans son emballage d'origine. Joignez une description de la défaillance de même qu'une pièce justificative de la date d'achat. Panasonic Canada Inc. ne peut être tenue responsable pour tout dommage ou perte subi pendant le transport si vous avez choisi le transporteur.

GARANTIE LIMITÉE – SUPPORTS DES LOGICIELS

Couverture – Panasonic Canada Inc. (« PCI ») garantit à l'acheteur original que la ou les disquettes ou tout autre support sur lequel le ou les programmes sont fournis sont exempts de défauts de pièces et de fabrication dans des conditions normales d'utilisation au Canada, et ce, pour une période de soixante (60) jours suivant la date de réception indiquée sur la preuve d'achat. LA PRÉSENTE GARANTIE EST LA SEULE OFFERTE PAR PCI COUVRANT LES SUPPORTS DE LOGICIELS. PCI ne garantit pas les logiciels. Reportez-vous à la garantie écrite du concédant de licence d'utilisation du logiciel (qui accompagne la copie du logiciel) pour toute réclamation en vertu de la garantie.
Réclamation – marche à suivre – Panasonic Canada Inc. remplacera toute disquette ou support défectueux si l'article en question est retourné, port payé, à son service de Marketing – produits informatiques, 5770 Ambler Drive, Mississauga (Ontario) L4W 2T3, dans les soixante (60) jours suivant la date d'achat original. Joignez à votre envoi une pièce justificative de votre achat et une description du problème.
Recours – La responsabilité de PCI - et votre seul recours - dans le cas de toute défaillance couverte par la garantie sur ce support de logiciel est limitée au seul remplacement du support. Elle ne couvre aucun autre dommage, y compris, mais non exclusivement, la perte d'usage ou de profits, ni aucun dommage spécial, indirect ou consécutif, ni aucune autre réclamation de nature similaire ou autre.
Produits non couverts – La présente garantie limitée ne s'applique pas si la ou les disquettes ou autre support ont été utilisés dans un produit d'une marque autre que Panasonic ou dans des conditions environnementales autres que celles spécifiées par PCI ou le fabricant, ou soumis à une mauvaise utilisation, à la négligence, à une manutention inadéquate ou encore si le programme a été modifié ou subi une tentative de modification ou des dommages attribuables à un accident ou à un cas fortuit. De plus, PCI n'assume aucune responsabilité pour toute perte de, ou tout dommage à, un programme, des données ou un support de sauvegarde amovible.

GÉNÉRALITÉS

PCI NE RECONNAÎT AUCUNE AUTRE GARANTIE, EXPLICITE OU IMPLICITE, Y COMPRIS, MAIS NON EXCLUSIVEMENT, LES GARANTIES IMPLICITES DE VALEUR COMMERCIALE ET D'UTILITÉ À UNE FIN QUELCONQUE, À L'ÉGARD DU LOGICIEL, SUPPORTS DE LOGICIELS, PRODUITS INFORMATIQUES, PÉRIPHÉRIQUES ET ACCESSOIRES. SOUS AUCUNE CIRCONSTANCE PCI NE POURRA ÊTRE TENUE RESPONSABLE DES DOMMAGES SPÉCIAUX, INDIRECTS OU CONSÉCUTIFS ATTRIBUABLES À UN MANQUEMENT AUX GARANTIES LIMITÉES DÉCRITES DANS LE PRÉSENT DOCUMENT OU À L'UTILISATION DU PRODUIT INFORMATIQUE, Y COMPRIS, SANS RESTRICTION, LA PERTE DE DONNÉES, D'AFFAIRES, D'ACHALANDAGE OU DE PROFIT. DANS TOUS LES CAS, LA RESPONSABILITÉ MAXIMALE DE PCI POUR TOUT MANQUEMENT NE POURRA EXCÉDER LE PRIX DE VENTE DU PRODUIT INFORMATIQUE. AUCUNE RÉCLAMATION, SANS ÉGARD À SES MOTIFS, NE POURRA ÊTRE FAITE AUPRÈS DE PCI PLUS DE DEUX (2) ANS APRÈS LES FAITS INVOQUÉS À LA BASE D'UNE TELLE RÉCLAMATION.
Garantie statutaires – Certaines juridictions interdisent de telles limitations ou exclusions; aussi, pourraient-elles ne pas s'appliquer.

As an ENERGY STAR® Partner, Panasonic Corporation has determined that this product meets the ENERGY STAR® guidelines for energy efficiency.

Outline of the International ENERGY STAR® Office Equipment Program

The international ENERGY STAR® Office Equipment Program is an international program that promotes energy saving through the use of computers and other office equipment. The program backs the development and dissemination of products with functions that effectively reduce energy consumption. It is an open system in which business proprietors can participate voluntarily. The targeted products are office equipment such as computers, displays, printers, facsimiles, and copiers. Their standards and logos are uniform among participating nations.

For information about ENERGY STAR®, refer to the following web site:

Web Site: www.energystar.gov

22-M-1

Panasonic Computer Solutions Company
3 Panasonic Way, Panazip 2F-5,
Secaucus, NJ 07094

Panasonic Canada Inc.
5770 Ambler Drive, Mississauga,
Ontario L4W 2T3

© Panasonic Corporation 2008
Printed in Japan

FJ1208-0
DFQW5229ZA