Panasonic®

OPERATING INSTRUCTIONS
Read Me First
Personal Computer
Model No. **CF-31** series

Contents

Read Me First

Safety Precautions 2
Regulatory Information 6

Getting Started

First-time Operation..... 11

Read Me First

Getting Started

■ **Terms and illustrations in these instructions**

In these instructions, the names and terms are referred as follows.

CAUTION : Conditions that may result in minor or moderate injury.

NOTE : Useful and helpful information.

• “Windows 10 Pro 64-bit” as “Windows” or “Windows 10”

- (Settings): Click (Start) and then click (Settings).

➔ : Page in these Operating Instructions.

: Reference to the on-screen manuals.

Please read these instructions carefully before using this product, and save this manual for future use. Update the on-screen manuals.

Safety Precautions

To reduce the risk of injury, loss of life, electric shock, fire, malfunction, and damage to equipment or property, always observe the following safety precautions.

Explanation of symbol word panels

The following symbol word panels are used to classify and describe the level of hazard, injury, and property damage caused when the denotation is disregarded and improper use is performed.

⚠ DANGER

Denotes a potential hazard that will result in serious injury or death.

⚠ WARNING

Denotes a potential hazard that could result in serious injury or death.

⚠ CAUTION

Denotes a hazard that could result in minor injury.

NOTICE

Denotes a hazard that could result in property damage.

The following symbols are used to classify and describe the type of instructions to be observed.

⃠	This symbol is used to alert users to a specific operating procedure that must not be performed.
!	This symbol is used to alert users to a specific operating procedure that must be followed in order to operate the unit safety.

⚠ DANGER
Precautions on the Battery Pack

Electrolyte leakage, generation of heat, ignition or rupture of the Battery Pack may result.

⃠

- **Do Not Throw the Battery Pack into a Fire or Expose It to Excessive Heat**
- **Do Not Deform, Disassemble, or Modify the Battery Pack**
- **Do Not Short the Positive (+) and Negative (-) Contacts**
  ⇨ Do not place the battery pack together with articles such as necklaces or hairpins when carrying or storing.
- **Do Not Apply Shocks to the Product by Dropping It, Applying Strong Pressure to It, etc.**
  ⇨ If this product is subjected to a strong impact, remove the battery pack from the computer immediately.
- **Do Not Charge the Battery Using Methods Other Than Those Specified**
- **Do Not Use the Battery Pack with Any Other Product**
  • The battery pack is rechargeable and was intended for the specified product.
- **Do Not Use This Product with a Battery Pack Other Than the One Specified**
  ⇨ Use only the specified battery pack with your product.

!

- **Avoid Extreme Heat (Near the Fire, in Direct Sunlight, for Example)**
- **When the Battery Pack Has Deteriorated or If Abnormal Swelling Occur, Replace It With a New One**
  ⇨ Do not continue to use a damaged battery pack.
- **If a Malfunction or Trouble Occurs, Immediately Stop Use**
  ⇨ If the battery pack appears to be damaged or deformed, or if it emits smoke, abnormal odor, excessive heat, or other abnormality, remove it from the computer immediately.

⚠ WARNING

Fire or electric shock may result.

■ **Do Not Do Anything That May Damage the AC Cord, the AC Plug, or the AC Adaptor**
Do not damage or modify the cord, place it near hot tools, bend, twist, or pull it forcefully, place heavy objects on it, or bundle it tightly.
⇨ Do not continue to use a damaged AC cord, AC plug and AC adaptor.
• Contact your technical support office for repair.

■ **Do Not Connect the AC Adaptor to a Power Source Other Than a Standard Household AC Outlet**
⇨ Connecting to a DC/AC converter (inverter) may damage the AC adaptor. On an airplane, only connect the AC adaptor/charger to an AC outlet specifically approved for such use.

■ **Do Not Pull or Insert the AC Plug If Your Hands Are Wet**

■ **Do Not Disassemble This Product**
• No user serviceable parts inside this unit. Refer servicing to qualified technician.

■ **Do Not Touch This Product In a Thunderstorm If Connected with the AC Cable or Any Other Cables**

■ **Do Not Place Containers of Liquid or Metal Objects on Top of This Product**
⇨ If foreign matter has found its way inside, immediately turn the power off and unplug the AC plug (and remove the battery pack). Then contact your technical support office.

■ **<u>If a Malfunction or Trouble Occurs, Immediately Stop Use</u>**
If the Following Malfunction Occurs, Immediately Unplug the AC Plug and the Battery Pack
• **This product is damaged**
• **Foreign object inside this product**
• **Smoke emitted**
• **Unusual smell emitted**
• **Unusually hot**
⇨ After the above procedure, contact your technical support office for repair.

■ **Clean Dust and Other Debris of the AC Plug Regularly**
• If dust or other debris accumulates on the plug, humidity, etc. may cause a defect in the insulation.

■ **Insert the AC Plug Completely**
⇨ Do not use a damaged plug or loose AC outlet.

Fire or electric shock may result.

■ **Close the Connector Cover Tightly When Using This Product Where Is a Lot of Water, Moisture, Steam, Dust, Oily Vapors, etc.**
⇨ If foreign matter has found its way inside, immediately turn the power off and unplug the AC cord, and then remove the battery pack. Then contact your technical support office.

■ **Turn the Power off Beforehand when Entering Locations, Such as a Gas Station Where Inflammable Gases Are Generated**
• Such gases may be ignited.

Burns or low-temperature burns may result.

■ **Do Not Use This Product in Close Contact With Your Body For a Long Period of Time**
⇨ Do not use this product with its heat-emitting parts in close contact with your body for a long period of time.
• Low-temperature burns may result.

■ **Do Not Expose Yourself or Other Persons to the Hot Wind from the Ventilation Hole (Exhaust) For a Long Period of Time.**
• Depending on the direction of the computer or the way you hold the computer, your hands and body will be more exposed to the hot wind.
• Covering the ventilation hole (exhaust) with your hand or other object can cause heat to build up inside, possibly resulting in burns.

■ **Do Not Touch the Surface of the AC Adaptor Continuously While Using/Charging**
• Burns may result.

■ **Do Not Place the Product in a Bag or Case While It is Turned On**
• Doing so may cause the product to overheat and result in burns.

Detrimental health effects on your body may result.

■ **Do Not Turn the Volume Up Too Loud When Using Headphones**
• Listening at high volumes that overstimulate the ear for long periods of time may result in loss of hearing.

<Only for model with wireless WAN>

■ **Do Not Leave a nanoSIM Card Within Reach of Infants**
• In case of swallowing, consult a doctor immediately.

⚠ WARNING

Radio waves transmitted from this product may affect the surrounding area.

- **Do Not Use This Product near Automatic Control Devices, Such As Automatic Doors And Fire Alarms**
  - Automatic control devices may malfunction, resulting in accidents.
- **Turn the Power Off on an Airplane** [*1]
  - ⇨ For use on a plane, follow the airline's instructions.
  - The safety of navigation may be compromised.
- **Turn the Power Off in Hospitals or at Locations Where Medical Equipment is Present** [*1]
  - ⇨ Do not bring this product into operating rooms, intensive care units, CCU, etc. [*2]
  - Medical electrical equipment may be affected, and malfunction may occur, resulting in accidents.
- **Turn the Power Off in Crowded Locations, Such As a Crowded Train, Where There May Be a Person with a Cardiac Pacemaker**
  - The operation of a pacemaker may be affected.
- **Keep This Product at Least 15 cm Away from the Position of an Implantable Pacemaker**
  - The operation of a pacemaker may be affected.

[*1] If there is no choice but to use this product in such an environment, turn the wireless capability off. However, bear in mind that use of a computer may be prohibited during takeoff and landing of an aircraft, etc. even if the wireless capability is turned off.

[*2] CCU is an abbreviated term of Coronary Care Unit.

⚠ CAUTION

Fire or electric shock may result.

- **Do Not Move This Product While the AC Plug Is Connected**
  - ⇨ If the AC cord is damaged, unplug the AC plug immediately.
- **Do Not Connect a Telephone Line, or a Network Cable Other Than the One Specified, Into the LAN Port**
  - ⇨ Do not connect to a network such as the ones listed below.
  - Networks other than 1000BASE-T, 100BASE-TX or 10BASE-T
  - Phone lines (IP phone (Internet Protocol Telephone), Telephone lines, internal phone lines (on-premise switches), digital public phones, etc.)

Fire or electric shock may result.

- **Do Not Subject the AC Adaptor To Any Strong Impact**
  - ⇨ Do not continue to use the AC adaptor after a strong impact such as being dropped.
  - ⇨ Contact your technical support office for repair.
- **Do Not Leave This Product in High Temperature Environment for a Long Period of Time**
  - Leaving this product where it will be exposed to extremely high temperatures such as near fire or in direct sunlight may deform the cabinet and/or cause trouble in the internal parts.
- **Do Not Block the Ventilation Hole (Exhaust/Intake)**
  - ⇨ Do not use this product wrapped in cloth or on top of bedding or a blanket.
- **Hold the Plug When Unplugging the AC Plug**
- **Use Only the Specified AC Adaptor With This Product**
  - ⇨ Do not use an AC adaptor other than the one supplied (supplied with the unit or one sold separately as an accessory).

This product may fall over or drop, resulting in an injury.

- **Do Not Place This Product on Unstable Surfaces**
- **Avoid Stacking**

Detrimental health effects on your body may result.

- **Take a Break Of 10-15 Minutes Every Hour**
  - Using this product for long periods of time may have detrimental health effects on the eyes or hands.

Burns, low-temperature burns, or frostbite may result.

- **Do Not Expose the Skin To This Product When Using the Product In A Hot Or Cold Environment**
  - ⇨ When it is necessary to expose the skin to this product such as to scan a fingerprint, perform the operation in the shortest time possible.

NOTICE

- Do not place the computer near a television or radio receiver.
- Keep the computer away from magnets. Data stored on the hard disk may be lost.
- This computer is not intended for the display of images for use in medical diagnosis.
- This computer is not intended for a use with connection of medical equipment for the purpose of medical diagnosis.
- Panasonic shall not be liable for loss of data or other incidental or consequential damages resulting from the use of this product.
- Do not touch the terminals on the battery pack. The battery pack may no longer function properly if the contacts are dirty or damaged.
- Do not expose the battery pack to water, or allow it to become wet.
- If the battery pack will not be used for a long period of time (a month or more), charge or discharge (use) the battery pack until the remaining battery level becomes 30% to 40% and store it in a cool, dry place.
- This computer prevents overcharging of the battery by recharging only when the remaining power is less than approx. 95% of capacity.
- The battery pack is not charged when the computer is first purchased. Be sure to charge it before using it for the first time. When the AC adaptor is connected to the computer, charging begins automatically.
- Should the battery leak and the fluid get into your eyes, do not rub your eyes. Immediately flush your eyes with clear water and see a doctor for medical treatment as soon as possible.

NOTE

- The battery pack may become warm during recharging or normal use. This is completely normal.
- Recharging will not commence if internal temperature of the battery pack is outside of the allowable temperature range (0 °C to 50 °C {32 °F to 122 °F}).
  (➔ *Operating Instructions - Reference Manual* “Basic Operation” “Battery Power”) Once the allowable range requirement is satisfied, charging begins automatically. Note that the recharging time varies based on the usage conditions. (Recharging takes longer than usual when the temperature is 10 °C {50 °F} or below.)
- If the temperature is low, the operating time is shortened. Only use the computer within the allowable temperature range.
- The battery pack is a consumable item. If the amount of time the computer can be run by using a particular battery pack becomes dramatically shorter and repeated recharging does not restore its performance, the battery pack should be replaced with a new one.
- When transporting a spare battery inside a package, briefcase, etc., it is recommended that it be placed in a plastic bag so that its contacts are protected.
- Always power off the computer when it is not in use. Leaving the computer on when the AC adaptor is not connected will exhaust the remaining battery capacity.

THIS PRODUCT IS NOT INTENDED FOR USE AS, OR AS PART OF, NUCLEAR EQUIPMENT/SYSTEMS, AIR TRAFFIC CONTROL EQUIPMENT/SYSTEMS, AIRCRAFT COCKPIT EQUIPMENT/SYSTEMS[*3], MEDICAL DEVICES OR ACCESSORIES[*4], LIFE SUPPORT SYSTEMS OR OTHER EQUIPMENTS/DEVICES/SYSTEMS THAT ARE INVOLVED WITH ENSURING HUMAN LIFE OR SAFETY. PANASONIC WILL NOT BE RESPONSIBLE FOR ANY LIABILITY RESULTING FROM THE USE OF THIS PRODUCT ARISING OUT OF THE FOREGOING USES.

[*3] AIRCRAFT COCKPIT EQUIPMENT/SYSTEMS include Class2 Electrical Flight Bag (EFB) Systems and Class1 EFB Systems when used during critical phases of flight (e.g., during take-off and landing) and/or mounted on to the aircraft. Class1 EFB Systems and 2 EFB Systems are defined by FAA: AC (Advisory Circular) 120-76A or JAA: JAA TGL (Temporary Guidance Leaflets) No.36.

[*4] As defined by the European Medical Device Directive (MDD) 93/42/EEC.

Panasonic cannot guarantee any specifications, technologies, reliability, safety (e.g. Flammability/Smoke/Toxicity/Radio Frequency Emission, etc) requirements related to aviation standards that exceed the specifications of our COTS (Commercial-Off-The-Shelf) products.

This computer is not intended for use in medical equipment including life-support systems, air traffic control systems, or other equipment, devices or systems that are involved with ensuring human life or safety. Panasonic cannot be held responsible in any way for any damages or loss resulting from the use of this unit in these types of equipment, devices or systems, etc.
The CF-31 was developed based on thorough research into the real-world portable computing environments. Exhaustive pursuit of usability and reliability under harsh conditions led to innovations such has the magnesium alloy exterior, vibration damped hard disk drive and floppy disk drive, flexible internal connections. The CF-31’s outstanding engineering has been tested using the strict MIL-STD- 810F (for vibration and shock) and IP (for dust and water) based procedures.
As with any portable computer device precautions should be taken to avoid any damage. The following usage and handling procedures are recommended.

Before putting the computer away, be sure to wipe off any moisture.

Regulatory Information

Information to the User / Informations destinées aux utilisateurs

<Only for model with wireless LAN/Bluetooth>

This product and your Health

This product, like other radio devices, emits radio frequency electromagnetic energy. The level of energy emitted by this product however is far much less than the electromagnetic energy emitted by wireless devices like for example mobile phones. Because this product operates within the guidelines found in radio frequency safety standards and recommendations, we believe this product is safe for use by consumers. These standards and recommendations reflect the consensus of the scientific community and result from deliberations of panels and committees of scientists who continually review and interpret the extensive research literature.

In some situations or environments, the use of this product may be restricted by the proprietor of the building or responsible representatives of the organization. These situations may for example include:

- Using this product on board of airplanes, or
- In any other environment where the risk of interference to other devices or services is perceived or identified as harmful.

If you are uncertain of the policy that applies on the use of wireless devices in a specific organization or environment (e.g. airports), you are encouraged to ask for authorization to use this product prior to turning on the product.

Regulatory Information

We are not responsible for any radio or television interference caused by unauthorized modification of this product. The correction of interference caused by such unauthorized modification will be the responsibility of the user. We and its authorized resellers or distributors are not liable for damage or violation of government regulations that may arise from failing to comply with these guidelines.

26-M-1

<Uniquement les modèles avec réseau local sans fil et/ou Bluetooth>

Ce produit et votre santé

Ce produit, comme tout autre appareil radio, émet de l'énergie radioélectrique. Toutefois, la quantité d'énergie émise par ce produit est beaucoup moins importante que l'énergie radioélectrique émise par des appareils sans fil tels que les téléphones portables.

L'utilisation de ce produit ne comporte aucun risque pour le consommateur du fait que cet appareil opère dans les limites des directives concernant les normes et les recommandations de sécurité sur les fréquences radio. Ces normes et recommandations reflètent le consensus de la communauté scientifique et résultent de délibérations de jurys et comités de scientifiques qui examinent et interprètent continuellement les nouveautés de la vaste littérature sur les recherches effectuées.

Dans certaines situations ou environnements, l'utilisation de ce produit peut être restreinte par le propriétaire du bâtiment ou par les représentants responsables de l'organisation. Ces situations peuvent être les suivantes par exemple :

- A bord d'un avion, ou
- Dans tout autre environnement où les risques d'interférence sur d'autres appareils ou services sont perçus ou identifiables comme dangereux.

Si vous n'êtes pas sûr de la réglementation applicable à l'utilisation d'appareils sans fil dans une organisation ou un environnement spécifique, (par exemple dans un aéroport) nous vous invitons àdemander l'autorisation d'utiliser ce produit avant sa mise en marche.

Informations concernant la réglementation

Nous déclinons toute responsabilité pour toute interférence radio ou télévision causée par des modifications non autorisées apportées à ce produit. La correction d'interférences causées par de telles modifications non autorisées sera la seule responsabilité de son utilisateur. Nousmêmes, les revendeurs officiels et les distributeurs ne sommes pas responsable de tout dégât ou de toute violation des règlements de l'État pouvant découler du non-respect de ces directives.

26-F-1

Lithium Battery / Pile au lithium

Lithium Battery!

This computer contains a lithium battery to enable the date, time, and other data to be stored. The battery should only be exchanged by authorized service personnel.

Warning!

A risk of explosion from incorrect installation or misapplication may possibly occur.

15-E-1

Pile au lithium!

Le micro-ordinateur renferme une pile au lithium qui permet de sauvegarder certaines données, notamment la date et l'heure. La pile ne doit être remplacée que par un technicien qualifié.

Danger !

Risque d'explosion en cas de non respect de cette mise en garde!

15-F-1

CD/DVD Drive Caution

CAUTION!

THIS PRODUCT UTILIZES A LASER.
USE OF CONTROLS, ADJUSTMENTS OR PERFORMANCE OF PROCEDURES OTHER THAN THOSE SPECIFIED HEREIN MAY RESULT IN HAZARDOUS RADIATION EXPOSURE.
DO NOT OPEN COVERS AND DO NOT REPAIR YOURSELF.
REFER SERVICING TO QUALIFIED PERSONNEL.

12-E-1

Laser safety information is appropriate only when drive with laser is installed.

12-M-2-1

AVERTISSEMENT!

CET APPAREIL UTILISE UN LASER.
L'UTILISATION DE COMMANDES OU DE RÉGLAGES OU L'EXÉCUTION DE PROCÉDURES AUTRES QUE CELLES SPÉCIFIÉES ICI PEUVENT PROVOQUER UNE EXPOSITION À DES RADIATIONS DANGEREUSES.
NE PAS OUVRIR LES COUVERCLES NI ESSAYER DE RÉPARER SOIMÊME.
CONFIER TOUT TRAVAIL D'ENTRETIEN À UN PERSONNEL QUALIFIÉ.

12-F-1

Les mesures de sécurité relatives au laser ne s'appliquent que lors de l'installation d'une unité avec laser.

12-F-2-1

The following label is put on the computer.
L'étiquette suivant est mis sur de l'ordinateur.

Battery Pack / Batterie

CAUTION:

Risk of Explosion if Battery is replaced by an Incorrect Type.
Dispose of Used Batteries According to the Instructions.

58-E-1

ATTENTION:

Il y a risque d'explosion si la batterie est remplacée par une batterie de type incorrect.
Mettre au rebut les batteries usagées conformément aux instructions.

58-F-1

Disposal of Old Equipment and Batteries

Only for European Union and countries with recycling systems

These symbols on the products, packaging, and/or accompanying documents mean that used electrical and electronic products and batteries must not be mixed with general household waste. For proper treatment, recovery and recycling of old products and used batteries, please take them to applicable collection points in accordance with your national legislation.
By disposing of them correctly, you will help to save valuable resources and prevent any potential negative effects on human health and the environment.
For more information about collection and recycling, please contact your local municipality.
Penalties may be applicable for incorrect disposal of this waste, in accordance with national legislation.

(Note for the battery symbol (bottom symbol)):
This symbol might be used in combination with a chemical symbol. In this case it complies with the requirement set by the Directive for the chemical involved.

36-E-1

Energy Star

<Only for model with the above logo on the computer>
As an ENERGY STAR® Partner, Panasonic Corporation has determined that this product meets ENERGY STAR® guidelines for energy efficiency. By enabling available power management settings, Panasonic computers enter a low-power sleep mode after a period of inactivity, saving the user energy.
<For U.S.A.>
To learn more about power management, please visit the web site:
www.energystar.gov/index.cfm?c=power_mgt.pr_power_management

Outline of the International ENERGY STAR® Office Equipment Program
The international ENERGY STAR® Office Equipment Program is an international program that promotes energy saving through the use of computers and other office equipment. The program backs the development and dissemination of products with functions that effective

ly reduce energy consumption. It is an open system in which business proprietors can participate voluntarily. The targeted products are office equipment such as computers, displays, printers, facsimiles, and copiers. Their standards and logos are uniform among participating nations.
<For U.S.A.>
For information about ENERGY STAR®, refer to the following web site:
Web Site: www.energystar.gov

<Only for model without the above logo on the computer>
This model is not applied to the ENERGY STAR® Office Equipment Program.

For U.S.A.

Federal Communications Commission Radio Frequency Interference Statement

Note: This equipment has been tested and found to comply with the limits for a Class B digital device, pursuant to Part 15 of the FCC Rules. These limits are designed to provide reasonable protection against harmful interference in a residential installation. This equipment generates, uses and can radiate radio frequency energy and, if not installed and used in accordance with the instructions, may cause harmful interference to radio communications. However, there is no guarantee that interference will not occur in a particular installation. If this equipment does cause harmful interference to radio or television reception, which can be determined by turning the equipment off and on, the user is encouraged to try to correct the interference by one or more of the following measures:

- Reorient or relocate the receiving antenna.
- Increase the separation between the equipment and receiver.
- Connect the equipment into an outlet on a circuit different from that to which the receiver is connected.
- Consult the Panasonic Service Center or an experienced radio/TV technician for help.

Warning

To assure continued compliance, use only shielded interface cables when connecting to a computer or peripheral. Also, any changes or modifications not expressly approved by the party responsible for compliance could void the user's authority to operate this equipment.

This device complies with Part 15 of the FCC Rules.
Operation is subject to the following two conditions:
(1) This device may not cause harmful interference, and
(2) This device must accept any interference received, including interference that may cause undesired operation.

FCC RF Exposure Warning:

- This equipment is provided with PC Card slot that could be used with wireless transmitters, which will be specifically recommended when they become available.
  Other third-party wireless transmitters have not been RF exposure evaluated for use with this computer and may not comply with FCC RF exposure requirements.

<Only for model with wireless LAN/wireless WAN/Bluetooth>

- This equipment complies with FCC radiation exposure limits set forth for an uncontrolled environment.
- This equipment has been approved for mobile operation, and unless otherwise advised in separate supplemental instructions for individual wireless transmitter(s), requires minimum 20cm spacing be provided between antenna(s) and all person's body (excluding extremities of hands, wrist and feet) during wireless modes of operation.
- This equipment may not be co-located or operated with any other antenna or transmitter.

<Optional Car Mounter / Port Replicator>

- This equipment is provided with external antenna connector(s) for connection to optional Car Mounter or Port Replicator for mobile external mounted antenna(s).
  External antenna(s) must be professionally installed and cannot exceed recommended maximum antenna gain as described in individual provided supplement instructions for wireless transmitters.
  For WLAN, the Car Mounter should be used with Radiall/ Larsen WLAN whip antenna, type NMO5E2400BKTNC with 5dBi antenna gain or less. Also, user must maintain minimum 20 cm spacing between external antenna(s) and all person's body (excluding extremities of hands, wrist and feet) during wireless modes of operation.

25-M-5

Responsible Party: Panasonic Corporation of North America
Two Riverfront Plaza
Newark, NJ 07102
Support Contact: https://na.panasonic.com/us/support

6-M-1

USA Only: Disposal may be regulated in your community due to environmental considerations. For disposal or recycling information, please visit Panasonic website: http://www.panasonic.com/environmental or call 1-888-769-0149

65-M-2

<For USA and Canada>
A lithium ion battery that is recyclable powers the product you have purchased.
Please call 1-800-8-BATTERY for information on how to recycle this battery.

L'appareil que vous vous êtes procuré est alimenté par une batterie au lithium-ion.
Pour des renseignements sur le recyclage de la batterie, veuillez composer le 1-800-8-BATTERY.

48-M-1

For Used in Motor Vehicle /Pour L'utilisation Dans Un Véhicule Motorisé

Warning: Notebook Computer may be installed in a motor vehicle and visible to the driver only if used to support vehicle related functions such as vehicle information, system control, rear or side observation and navigation. If used for entertainment purpose, such as television reception or video play, it must be installed to the rear of the driver's seat where it will not be visible, directly or indirectly, to the operator of the motor vehicle. Check with individual state/provincial laws to determine lawful use of this product while operating within a motor vehicle.

Avertissement : L'ordinateur bloc-notes peut être installé dans un véhicule motorisé et dans le champ de vision du conducteur uniquement en tant que dispositif d'aide aux fonctions du véhicule, comme par exemple pour fournir des informations sur le véhicule, comme dispositif de contrôle de système, pour l'observation à l'arrière ou sur les côtés du véhicule, ainsi que pour fournir de l'information routière. Pour toute utilisation à fin de divertissement, comme par exemple pour regarder la télévision ou jouer à des jeux vidéo, il doit être installé à l'arrière du siège du conducteur, en un emplacement où il ne sera pas visible, ni directement ni indirectement, pour le conducteur du véhicule motorisé. Vérifiez les lois fédérales et nationales qui régissent l'utilisation légale de cet appareil à l'intérieur d'un véhicule motorisé.

35-M-1

<For USA-California Only>

This product contains a CR Coin Cell Lithium Battery which contains Perchlorate Material - special handling may apply.
See www.dtsc.ca.gov/hazardouswaste/perchlorate/

38-M-1

For Canada

Canadian ICES-003
CAN ICES-3(B)/NMB-3(B)

7-M-2

<Only for model with wireless LAN/Bluetooth/GPS>
ISED Canada
This product complies with ISED Canada's licence-exempt RSSs.
Operation is subject to the following two conditions;
(1) this device may not cause interference, and
(2) this device must accept any interference, including interference that may cause undesired operation of the device.

<Ne s'applique qu'aux modèes avec technologie Bluetooth/LAN sans fil/WAN sans fil>
ISED Canada
Cet équipement est conforme aux normes sans licence RSS d'ISED Canada.
Son fonctionnement est soumis aux deux conditions suivantes :
(1) ce dispositif ne peut produire de brouillage, et
(2) ce dispositif doit accepter le brouillage, y compris le brouillage pouvant entraîner le fonctionnement non désiré de l'appareil.

30-Ca-1-1

<Only for model with wireless LAN>
This product (local network devices) for the band 5150-5250 MHz is only indoor usage to reduce potential for harmful interference to co-channel Mobile Satellite systems.
High power radars are allocated as primary users (meaning they have priority) of 5250-5350 MHz and 5650-5850 MHz and these radars could cause interference and/or damage to LELAN devices.
<Ne s'applique qu'aux modèles avec technologie LAN sans fil>
Cet appareil (pour réseaux locaux radioélectriques) dans les bandes de fréquences 5150-5250 MHz est réservé à une utilization à l'intérieur afin de réduire le risque d'interférence avec les systèmes satellites mobiles bicanaux.
Les radars forte puissance sont désignés comme étant les premiers utilisateurs (c'est-àdire qu'ils ont la priorité) des bandes de fréquences 5250-5350 MHz et 5650-5850 MHz. Ces stations radars peuvent provoquer des interférences et/ou des dommages à ce périphérique.

30-Ca-2-1

<Only for model with wireless LAN/wireless WAN/Bluetooth>
- This computer complies with ISED Canada radiation exposure limits set forth for an uncontrolled environment.
- This equipment has been approved for mobile operation, and unless otherwise advised in separate supplemental instructions for individual wireless transmitter(s), requires minimum 20 cm spacing be provided between antenna(s) and all person's body (excluding extremities of hands, wrist and feet) during wireless modes of operation.

<Ne s'applique qu'aux modèles avec technologie Bluetooth/LAN sans fil/WAN sans fil>
- Cet équipement est conforme aux limites d'exposition aux rayonnements ISED Canada établies pour un environnement non contrôlé.
- Cet équipement a été approuvé à des fins d'opération mobile et, sauf indication contraire, dans une notice supplémentaire concernant les émetteurs sans fil individuels, doit être utilisé en veillant qu'il y ait une distance d'au moins 20 cm entre son(ses) antenne(s) et le corps de l'utilisateur (sauf les extrémités : mains, poignets et pieds) dans les modes d'opération sans fil.

FOR USE WITH MODEL NO. : CF-AA5713A
POUR UTILISER AVEC MODÈLE : CF-AA5713A

20-Ca-1

For Europe

<Only for model with a "CE" mark on the bottom of the computer>

Declaration of Conformity (DoC)
"Hereby, Panasonic declares that this Personal Computer is in compliance with the essential requirements and other relevant provisions of the Directive 2014/53/EU."

Hint:
If you want to get a copy of the original DoC of our above mentioned products, please contact our web address:
http://www.ptc.panasonic.eu

Authorised Representative:
Panasonic Testing Centre
Panasonic Marketing Europe GmbH
Winsbergring 15, 22525 Hamburg, Germany

18-E-1

For Australia

For Used in Motor Vehicle

Warning: Notebook Computer may be installed in a motor vehicle and visible to the driver only if used to support vehicle related functions such as vehicle information, system control, rear or side observation and navigation. If the Notebook Computer is to be used for work or entertainment purposes, such as television reception, video play or other work programs, it must be installed in a position where it will NOT:
(a) be visible, directly or indirectly, to the operator of the motor vehicle; or
(b) cause distraction to drivers of other motor vehicles.
Check with individual state laws to determine lawful use of this product while operating within a motor vehicle. If the visual display unit is, or is part of, a driver's aid, above rule is not applied. "Driver's aid" includes closed-circuit television security cameras, dispatch systems, navigational or intelligent highway and vehicle system equipment, rear view screens, ticket-issuing machines and vehicle monitoring devices.

35-A-1

For India

Declaration of Conformity with the requirements of the E-Waste (Management) Rules

The Product is in conformity with the requirements of the reduction of hazardous substances of the E-Waste Rules.

The content of hazardous substance with the exemption of the applications listed in SCHEDULE II of the
E-waste Rules:
1. Lead (Pb) - not over 0.1% by weight;
2. Cadmium (Cd) - not over 0.01% by weight;
3. Mercury (Hg) - not over 0.1% by weight;
4. Hexavalent chromium (Cr6+) - not over 0.1% by weight;
5. Polybrominated biphenyls (PBBs) - not over 0.1% by weight;
6. Polybrominated diphenyl ethers (PBDEs) - not over 0.1% by weight.

For the purpose of recycling to facilitate effective utilization of resources, please return this product to a nearby authorized collection center, registered dismantler or recycler, or Panasonic service center when disposing of this product.
Please see the Panasonic website for further information on collection centers, etc. , or call the toll-free number below.

Website:
https://www.panasonic.com/in/corporate/sustainability/panasonic-india-i-recycle-program.html
Service helpline: 1800 103 1333 or 1800 108 1333

Do's & Don't: - E-Waste (Management) Amendment Rules 2018

S.No.	Do's	Don't
1	All electrical and electronic products are required to be handed over only to the Authorized recycler.	The product should not be opened by the User himself/herself, but only by authorized service personnel.
2	The product should be handed over only to authorized recycler for disposal.	The product is not meant for re-sale any unauthorized agencies/scrap dealer/kabariwalahs.
3	Keep the product in isolated area, after it becomes non-functional/un-repairable so as to prevent its accidental breakage.	The product is not meant for mixing into household waste stream.
4	Provide information on the catalogue with product end-of-life.	Do not keep any replaced spare part(s) from the product in exposed area.
5	Always Dispose products that have reached end-of life at Panasonic India authorized service center.	Do not donate old electronic items to anybody.
6	Wherever possible or as instructed, separate the packaging material according to responsible waste disposal options and sorting for recycling.	Do not give e-waste to informal and unorganized sectors like Local Scrap Dealer/Rag Pickers.
7	Create environment awareness PAN India Level.	Do not dispose your product in garbage bins along with municipal waste that ultimately reaches landfill.

68-M-3

First-time Operation

■ **Preparation**

① Check and identify the supplied accessories.
If you do not find the described accessories, contact your support office.

- **AC Adaptor. 1**

Model No: CF-AA5713A

- **AC Cord 1**

- **Battery Pack . . . 1**

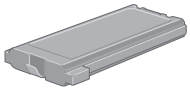

Model No: CF-VZSU46AU

<Only for model with touchscreen>

- **Soft Cloth 1**

- **Tether 1**

- **Stylus 1**

(➔ *Operating Instructions - Reference Manual* “Basic Operation” “Screen Input Operation”)

- **OPERATING INSTRUCTIONS - Read Me First (This book) 1**

■ **Latest Information on Windows 10**

When Microsoft Windows 10 is updated, the screen display or operation procedures may be changed.
For the latest information on Windows 10, see the following web page.
http://pc-dl.panasonic.co.jp/itn/addendum/

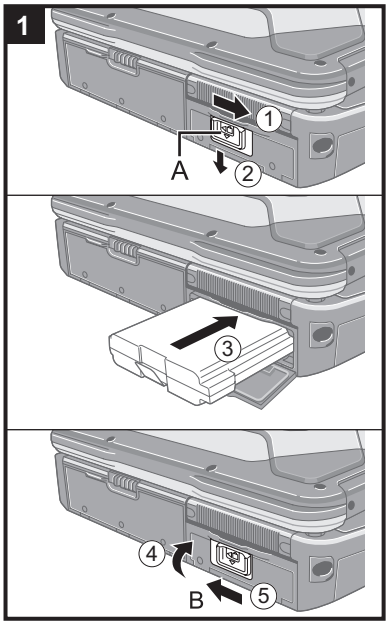

1 Inserting the Battery Pack

① Slide the latch (A) to the right to unlock the cover.
② Slide the latch (A) down, and open the cover.
③ Insert the battery pack until it securely fits the connector.
④ Close the cover until it clicks.
⑤ Slide the latch (B) to the left to lock the cover.

CAUTION

- Make sure the latch is securely locked. Otherwise the battery pack may fall when you carry the computer.
- Do not touch the terminals of the battery pack and the computer. Doing so can make the terminals dirty or damaged, and may cause malfunction of the battery pack and the computer.

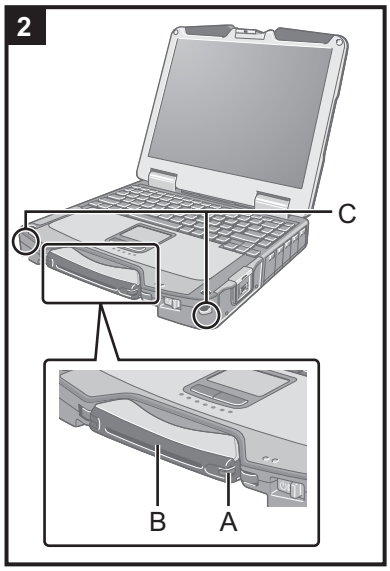

2 Attaching the stylus to the computer (only for model with touchscreen)

Use the tether to attach the stylus to the computer so you will not lose it. Before attaching the pen (A), take out it from the pen holder (B). There are holes (C) to attach it.

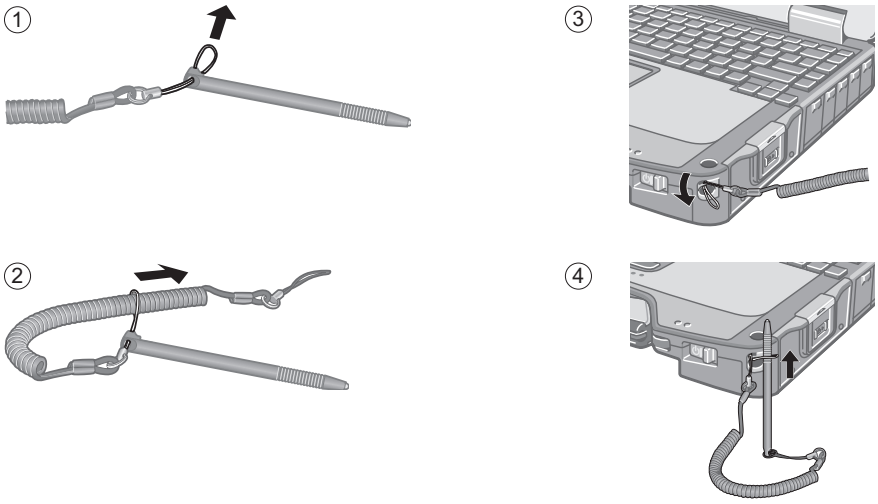

CAUTION

- Do not pull the tether with excessive force. The stylus may hit the computer, person's body or other objects when released.

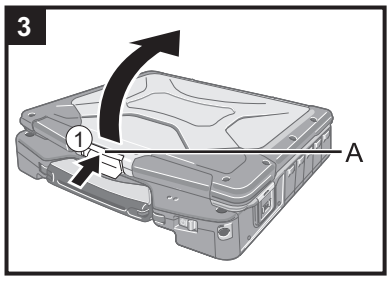

3 Opening the Display

① Push and hold the latch (A), and lift open the display.

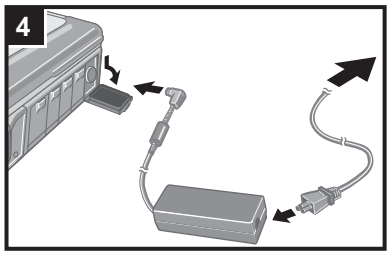

4 Connect your computer to a power outlet

The battery charging starts automatically.

CAUTION

- Do not disconnect the AC adaptor and do not switch the wireless switch to on until the first-time operation procedure is completed.
- When using the computer for the first time, do not connect any peripheral device (including wired LAN cable) except the battery pack and AC adaptor.
- **Handling the AC adaptor**
  - Problems such as sudden voltage drops may arise during periods of thunder and lightning. Since this could adversely affect your computer, an uninterruptible power source (UPS) is highly recommended unless running from the battery pack alone.

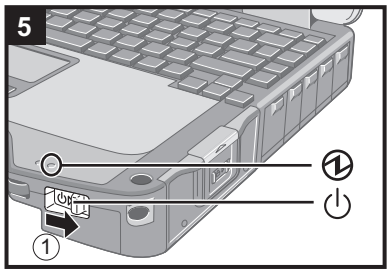

5 Turn on the computer

① Slide and hold the power switch ⏻ until the power indicator ⏻ lights.

CAUTION

- Do not slide the power switch repeatedly.
- The computer will forcibly be turned off if you slide and hold the power switch for 4 seconds or longer.
- Once you turn off the computer, wait for 10 seconds or more before you turn on the computer again.
- Do not perform the following operation until the drive indicator ⛁ turns off.
  - Connecting or disconnecting the AC adaptor
  - Sliding the power switch
  - Touching the keyboard, touchpad or touchscreen (only for model with touchscreen)
  - Closing the display
  - Turn on/off the wireless switch
  - Any changes from the default setting of the Setup Utility
- When the CPU temperature is high, the computer may not start up to prevent overheating of the CPU. Wait until the computer cools down, and then turn the power on again. If the computer does not power on even after cooling down, contact Panasonic Technical Support (➔ *Operating Instructions - Reference Manual*).

6 Setup Windows

Follow the on-screen instructions.

- The computer restarts several times. Do not touch the keyboard, touchpad, or touchscreen (only for model with touchscreen) and wait until the drive indicator ⛁ has turned off.
- After the computer is turned on, the screen remains black or unchanged for a while. This is not a malfunction. Wait for a moment until the Windows setup screen appears.
- During setup of Windows, use the touchpad and clicking to move the pointer and to click an item.
- Setup of Windows will take approximately 5 minutes.
  Go to the next step, confirming each message on the display.
- You can set the Wireless Network after the setup of Windows is complete.
  If “Let’s connect you to a network” is displayed, you can select “Skip for now”.
- We recommend that you set the password after the setup of Windows in complete.

CAUTION

- You can change the user name, image and security setting after setup of Windows.
- Use standard characters as a computer name: numbers 0 through 9, uppercase and lowercase letters from A to Z, and the hyphen (-) character. Do not use the following words and characters for user name: CON, PRN, AUX, CLOCK$, NUL, COM1 to COM9, LPT1 to LPT9, LPT, &, space.
  If the error message “The computer name is not valid” appears, check if characters other than the above are not entered. If the error message still remains on the display, set the key entry mode to English (“ENG”) and enter characters.

7 Restart the computer

① Click (Start).
② Click (Power) - [Restart].
- A portion of the Panasonic PC Settings Utility functions will be enabled after the computer restarts.

NOTE

- When the “Emergency notification setting” screen appears, read the on-screen messages carefully. Follow the on-screen instructions. You can set the “Emergency notification setting” after the setup of Windows is complete.

8 Update the on-screen manual

① Connect a network to the internet. Sign in to Windows as an administrator.
For further information, refer to *Connect to a network*.
② Update the on-screen manual.
Click (Start) - [Panasonic PC Manual Selector].
Follow the on-screen instructions.

9 Create a recovery disc

A recovery disc allows you to install OS and restore its factory default condition, in case, for example, the recovery partition of the HDD is damaged.

Refer to ➔ *Operating Instructions - Reference Manual* “Important Operation/ Settings” “Create a Recovery Disc” about creating the disc.

NOTE

- To set the password, proceed as follows.
  ① Click (Start) - (Settings) - [Accounts] - [Sign-in options].
  ② Click [Add] under “Password”.
- Set the key entry mode to English (“ENG”) and enter characters.
  The keyboard layout can be added or changed in the following steps.
  ① Click (Start) - (Settings) - [Time & Language] - [Region & language].
  ② Click a language and click [Options].
  ③ Click [Add a keyboard] and choose a keyboard from the list.
- Remember your password. If you forget the password, you cannot use Windows. Creating a password reset disk beforehand is recommended.
- **PC Information Viewer**
  This computer periodically records the management information of the flash memory, etc. The maximum data volume for each record is 1024 bytes.
  This information is only used for estimating the cause in the case when the flash memory goes down by any possibility. They are never sent to outside via network nor used for any other purpose except for the purpose described the above.
  To disable the function, add the check mark for [Disable the automatic save function for management information history] in [Hard Disk Status] of PC Information Viewer, and click [OK].
  Then follow the on-screen instructions.
  (➔ *Operating Instructions - Reference Manual* “Troubleshooting” “Checking the Computer’s Usage Status”)

MEMO

Panasonic Corporation
Osaka, Japan

Panasonic System Solutions Company of North America
Two Riverfront Plaza
Newark, NJ 07102

Panasonic Canada Inc.
5770 Ambler Drive, Mississauga,
Ontario L4W 2T3

Panasonic Australia Pty. Limited
ACN 001 592 187 ABN 83 001 592 187
1 Innovation Road, Macquarie Park NSW 2113

Web Site :https://panasonic.net/cns/pc/

HS1018-0
DHQX1537ZA/J1

© Panasonic Corporation 2018
Printed in Japan