Panasonic®

OPERATING INSTRUCTIONS
Read Me First
Personal Computer

Model No. **CF-54** series

Contents

Read Me First

Safety Precautions 2
Regulatory Information 7

Getting Started

First-time Operation..... 15

Read Me First

Getting Started

■ **Terms and illustrations in these instructions**

In these instructions, the names and terms are referred as follows.

CAUTION : Conditions that may result in minor or moderate injury.

NOTE : Useful and helpful information.

• “Windows 10 Pro 64-bit” as “Windows” or “Windows 10”

⊞ - ⚙ (Settings) : Click ⊞ (Start) and then click ⚙ (Settings).

➔ : Page in these Operating Instructions.

: Reference to the on-screen manuals.

Please read these instructions carefully before using this product, and save this manual for future use.

Safety Precautions

To reduce the risk of injury, loss of life, electric shock, fire, malfunction, and damage to equipment or property, always observe the following safety precautions.

Explanation of symbol word panels

The following symbol word panels are used to classify and describe the level of hazard, injury, and property damage caused when the denotation is disregarded and improper use is performed.

⚠ DANGER

Denotes a potential hazard that will result in serious injury or death.

⚠ WARNING

Denotes a potential hazard that could result in serious injury or death.

⚠ CAUTION

Denotes a hazard that could result in minor injury.

NOTICE

Denotes a hazard that could result in property damage.

The following symbols are used to classify and describe the type of instructions to be observed.

⃠	This symbol is used to alert users to a specific operating procedure that must not be performed.
❗	This symbol is used to alert users to a specific operating procedure that must be followed in order to operate the unit safety.

⚠ DANGER

Precautions on the Battery Pack

Electrolyte leakage, generation of heat, ignition or rupture of the Battery Pack may result.

⃠	■ **Do Not Throw the Battery Pack into a Fire or Expose It to Excessive Heat** ■ **Do Not Deform, Disassemble, or Modify the Battery Pack** ■ **Do Not Short the Positive (+) and Negative (-) Contacts** ⇨ Do not place the battery pack together with articles such as necklaces or hairpins when carrying or storing. ■ **Do Not Apply Shocks to the Product by Dropping It, Applying Strong Pressure to It, etc.** ⇨ If this product is subjected to a strong impact, damaged or deformed, stop using it immediately. ■ **Do Not Charge the Battery Using Methods Other Than Those Specified** ■ **Do Not Use the Battery Pack with Any Other Product** • The battery pack is rechargeable and was intended for the specified product. ■ **Do Not Use This Product with a Battery Pack Other Than the One Specified** ⇨ Use only the specified battery pack with your product.
❗	■ **Avoid Extreme Heat (Near the Fire, in Direct Sunlight, for Example)** ■ **When the Battery Pack Has Deteriorated or If Abnormal Swelling Occur, Replace It With a New One** ⇨ Do not continue to use a damaged battery pack.

⚠ DANGER

Precautions on the Built-in Bridge Battery (for disposal)

<Only for model with Built-in Bridge Battery>
When disposing the battery, generation of heat, ignition or rupture of the Built-in Bridge Battery may result.

Handling This Computer
- **Do Not Disassemble the Computer Except When Disposing**

Handling the Built-in Bridge Battery
- **Do Not Short the Positive (+) and Negative (-) Contacts**
- **Do Not Throw the Battery into a Fire or Expose It to Excessive Heat**
- **Do Not Apply Shocks to the Built-in Bridge Battery by Dropping It, Applying Strong Pressure to It, etc.**
- **Do Not Charge**
- **Do Not Use**
- **Do Not Deform, Disassemble, or Modify the Built-in Bridge Battery**

- **Avoid Extreme Heat (Near the Fire, in Direct Sunlight, for Example)**

⚠ WARNING

<Only for model with Built-in Bridge Battery>
Generation of heat, ignition or rupture of the Built-in Bridge Battery may result.

- **Do Not Throw This Product Into a Fire or Expose It to Excessive Heat**
- **Do Not Deform, Disassemble, or Modify This Product**
- **Do Not Apply Shocks to the Product by Dropping It, Applying Strong Pressure to It, etc.**
- **Do Not Charge the Battery Using Methods Other Than Those Specified**

- **Avoid Extreme Heat (Near the Fire, In Direct Sunlight, for Example)**
- **When the Battery Has Deteriorated, Contact Your Technical Support Office to Replace the Battery**

Fire or electric shock may result.

- **Do Not Do Anything That May Damage the AC Cord, the AC Plug, or the AC Adaptor**
  Do not damage or modify the cord, place it near hot tools, bend, twist, or pull it forcefully, place heavy objects on it, or bundle it tightly.
  ⇨ Do not continue to use a damaged AC cord, AC plug and AC adaptor.
  - Contact your technical support office for repair.
- **Do Not Connect the AC Adaptor to a Power Source Other Than a Standard Household AC Outlet**
  ⇨ Connecting to a DC/AC converter (inverter) may damage the AC adaptor. On an airplane, only connect the AC adaptor/charger to an AC outlet specifically approved for such use.
- **Do Not Pull or Insert the AC Plug If Your Hands Are Wet**
- **Do Not Disassemble This Product**
- **Do Not Touch This Product In a Thunderstorm If Connected with the AC Cable or Any Other Cables**
- **Do Not Place Containers of Liquid or Metal Objects on Top of This Product**
  ⇨ If foreign matter has found its way inside, immediately turn the power off and unplug the AC plug (and remove the battery pack). Then contact your technical support office.

⚠ WARNING

■ **<u>If a Malfunction or Trouble Occurs, Immediately Stop Use</u>**
If the Following Malfunction Occurs, Immediately Unplug the AC Plug and the Battery Pack
- **This product is damaged**
- **Foreign object inside this product**
- **Smoke emitted**
- **Unusual smell emitted**
- **Unusually hot**

⇨ After the above procedure, contact your technical support office for repair.

■ **Clean Dust and Other Debris of the AC Plug Regularly**
- If dust or other debris accumulates on the plug, humidity, etc. may cause a defect in the insulation.

■ **Insert the AC Plug Completely**
⇨ Do not use a damaged plug or loose AC outlet.

■ **Close the Connector Cover Tightly When Using This Product Where Is a Lot of Water, Moisture, Steam, Dust, Oily Vapors, etc.**
⇨ If foreign matter has found its way inside, immediately turn the power off and unplug the AC cord, and then remove the battery pack. Then contact your technical support office.

Burns or low-temperature burns may result.

■ **Do Not Use This Product in Close Contact With Your Body For a Long Period of Time**
⇨ Do not use this product with its heat-emitting parts in close contact with your body for a long period of time.
- Low-temperature burns may result.

■ **Do Not Expose Yourself or Other Persons to the Hot Wind from the Ventilation Hole (Exhaust) For a Long Period of Time**
- Covering the ventilation hole (exhaust) with your hand or other object can cause heat to build up inside, possibly resulting in burns.

■ **Do Not Touch The Surface of The AC Adaptor Continuously While Using/Charging**
- Burns may result.

■ **Do Not Place the Product in a Bag or Case While It is Turned On**
- Doing so may cause the product to overheat and result in burns.

Detrimental health effects on your body may result.

■ **Do Not Turn the Volume Up Too Loud When Using Headphones**
- Listening at high volumes that overstimulate the ear for long periods of time may result in loss of hearing.

⚠ CAUTION

Fire or electric shock may result.

■ **Do Not Move This Product While the AC Plug Is Connected**
⇨ If the AC cord is damaged, unplug the AC plug immediately.

■ **Do Not Connect a Telephone Line, or a Network Cable Other Than the One Specified, Into the LAN Port**
⇨ Do not connect to a network such as the ones listed below.
- Networks other than 1000BASE-T, 100BASE-TX or 10BASE-T
- Phone lines (IP phone (Internet Protocol Telephone), Telephone lines, internal phone lines (on-premise switches), digital public phones, etc.)

■ **Do Not Subject the AC Adaptor To Any Strong Impact**
⇨ Do not continue to use the AC adaptor after a strong impact such as being dropped.
⇨ Contact your technical support office for repair.

■ **Do Not Leave This Product in High Temperature Environment for a Long Period of Time**
- Leaving this product where it will be exposed to extremely high temperatures such as near fire or in direct sunlight may deform the cabinet and/or cause trouble in the internal parts.

■ **Do Not Block the Ventilation Hole (Exhaust/Intake)**
⇨ Do not use this product wrapped in cloth or on top of bedding or a blanket.

Fire or electric shock may result.

■ **Hold the Plug When Unplugging the AC Plug**
■ **Use Only the Specified AC Adaptor With This Product**
⇨ Do not use an AC adaptor other than the one supplied (supplied with the unit or one sold separately as an accessory).

This product may fall over or drop, resulting in an injury.

■ **Do Not Place This Product on Unstable Surfaces**
■ **Avoid Stacking**

Detrimental health effects on your body may result.

<Only for model with CD/DVD Drive>
■ **Do Not Look Into the CD/DVD Drive**
- Looking directly at the internal laser light source may result in damage to eyesight.

⇨ Contact your technical support office for check, maintenance and repair.

■ **Do Not Use Discs That Are Cracked or Deformed**
- Because the discs rotate at high speeds, damaged discs may break apart causing injury.

⇨ Discs that are not round and discs that have been repaired using adhesives are similarly dangerous, and so should not be used.

■ **Take a Break Of 10-15 Minutes Every Hour**
- Using this product for long periods of time may have detrimental health effects on the eyes or hands.

Burns, low-temperature burns, or frostbite may result.

■ **Do Not Expose the Skin To This Product When Using the Product In A Hot Or Cold Environment**
⇨ When it is necessary to expose the skin to this product such as to scan a fingerprint, perform the operation in the shortest time possible.

NOTICE

- Do not place the computer near a television or radio receiver.
- Keep the computer away from magnets. Data stored on the hard disk may be lost.
- This computer is not intended for the display of images for use in medical diagnosis.
- This computer is not intended for a use with connection of medical equipment for the purpose of medical diagnosis.
- Panasonic shall not be liable for loss of data or other incidental or consequential damages resulting from the use of this product.
- Do not touch the terminals on the battery pack. The battery pack may no longer function properly if the contacts are dirty or damaged.
- Do not expose the battery pack to water, or allow it to become wet.
- If the battery pack will not be used for a long period of time (a month or more), charge or discharge (use) the battery pack until the remaining battery level becomes 30% to 40% and store it in a cool, dry place.
- This computer prevents overcharging of the battery by recharging only when the remaining power is less than approx. 95% of capacity.
- The battery pack is not charged when the computer is first purchased. Be sure to charge it before using it for the first time. When the AC adaptor is connected to the computer, charging begins automatically.
- Should the battery leak and the fluid get into your eyes, do not rub your eyes. Immediately flush your eyes with clear water and see a doctor for medical treatment as soon as possible.

NOTE

- The battery pack may become warm during recharging or normal use. This is completely normal.
- Recharging will not commence if internal temperature of the battery pack is outside of the allowable temperature range (0 °C to 50 °C {32 °F to 122 °F}). (➔ *Operating Instructions - Reference Manual* "Basic Operation" "Battery Power") Once the allowable range requirement is satisfied, charging begins automatically. Note that the recharging time varies based on the usage conditions. (Recharging takes longer than usual when the temperature is 10 °C {50 °F} or below.)
- If the temperature is low, the operating time is shortened. Only use the computer within the allowable temperature range.
- This computer has a high temperature mode function that prevents the degradation of the battery in high temperature environments. (➔ *Operating Instructions - Reference Manual* "Basic Operation" "Battery Power") A level corresponding to a 100% charge for high temperature mode is approximately equivalent to an 80% charge level for normal temperature mode.
- The battery pack is a consumable item. If the amount of time the computer can be run by using a particular battery pack becomes dramatically shorter and repeated recharging does not restore its performance, the battery pack should be replaced with a new one.
- When transporting a spare battery inside a package, briefcase, etc., it is recommended that it be placed in a plastic bag so that its contacts are protected.
- Always power off the computer when it is not in use. Leaving the computer on when the AC adaptor is not connected will exhaust the remaining battery capacity.
- <Only for model with Built-in Bridge Battery> To minimize deterioration of the built-in bridge battery, connect the computer to the AC adaptor and recharge it for approximately 2 hours about once every year.

THIS PRODUCT IS NOT INTENDED FOR USE AS, OR AS PART OF, NUCLEAR EQUIPMENT/SYSTEMS, AIR TRAFFIC CONTROL EQUIPMENT/SYSTEMS, AIRCRAFT COCKPIT EQUIPMENT/SYSTEMS[*1], MEDICAL DEVICES OR ACCESSORIES[*2], LIFE SUPPORT SYSTEMS OR OTHER EQUIPMENTS/DEVICES/SYSTEMS THAT ARE INVOLVED WITH ENSURING HUMAN LIFE OR SAFETY. PANASONIC WILL NOT BE RESPONSIBLE FOR ANY LIABILITY RESULTING FROM THE USE OF THIS PRODUCT ARISING OUT OF THE FOREGOING USES.

[*1] AIRCRAFT COCKPIT EQUIPMENT/SYSTEMS include Class2 Electrical Flight Bag (EFB) Systems and Class1 EFB Systems when used during critical phases of flight (e.g., during take-off and landing) and/or mounted on to the aircraft. Class1 EFB Systems and 2 EFB Systems are defined by FAA: AC (Advisory Circular) 120-76A or JAA: JAA TGL (Temporary Guidance Leaflets) No.36.

[*2] As defined by the European Medical Device Directive (MDD) 93/42/EEC.

Panasonic cannot guarantee any specifications, technologies, reliability, safety (e.g. Flammability/Smoke/Toxicity/Radio Frequency Emission, etc.) requirements related to aviation standards that exceed the specifications of our COTS (Commercial-Off-The-Shelf) products.

This computer is not intended for use in medical equipment including life-support systems, air traffic control systems, or other equipment, devices or systems that are involved with ensuring human life or safety. Panasonic cannot be held responsible in any way for any damages or loss resulting from the use of this unit in these types of equipment, devices or systems, etc.
This computer has been designed so as to minimize shock to the LCD and hard disk drive, the leakage of liquid (e.g., water) on to the keyboard, etc., but no warranty is provided against such trouble. Therefore, as a precision instrument, be extremely careful in the handling.

Regulatory Information

Information to the User / Informations destinées aux utilisateurs

<Only for model with wireless LAN/Bluetooth>

This product and your Health

This product, like other radio devices, emits radio frequency electromagnetic energy. The level of energy emitted by this product however is far much less than the electromagnetic energy emitted by wireless devices like for example mobile phones.
Because this product operates within the guidelines found in radio frequency safety standards and recommendations, we believe this product is safe for use by consumers. These standards and recommendations reflect the consensus of the scientific community and result from deliberations of panels and committees of scientists who continually review and interpret the extensive research literature.
In some situations or environments, the use of this product may be restricted by the proprietor of the building or responsible representatives of the organization. These situations may for example include:

- Using this product on board of airplanes, or
- In any other environment where the risk of interference to other devices or services is perceived or identified as harmful.

If you are uncertain of the policy that applies on the use of wireless devices in a specific organization or environment (e.g. airports), you are encouraged to ask for authorization to use this product prior to turning on the product.

Regulatory Information

We are not responsible for any radio or television interference caused by unauthorized modification of this product. The correction of interference caused by such unauthorized modification will be the responsibility of the user. We and its authorized resellers or distributors are not liable for damage or violation of government regulations that may arise from failing to comply with these guidelines.

26-M-1

<Uniquement les modèles avec réseau local sans fil et/ou Bluetooth>

Ce produit et votre santé

Ce produit, comme tout autre appareil radio, émet de l’énergie radioélectrique. Toutefois, la quantité d’énergie émise par ce produit est beaucoup moins importante que l’énergie radioélectrique émise par des appareils sans fil tels que les téléphones portables. L’utilisation de ce produit ne comporte aucun risque pour le consommateur du fait que cet appareil opère dans les limites des directives concernant les normes et les recommandations de sécurité sur les fréquences radio. Ces normes et recommandations reflètent le consensus de la communauté scientifique et résultent de délibérations de jurys et comités de scientifiques qui examinent et interprètent continuellement les nouveautés de la vaste littérature sur les recherches effectuées. Dans certaines situations ou environnements, l’utilisation de ce produit peut être restreinte par le propriétaire du bâtiment ou par les représentants responsables de l’organisation. Ces situations peuvent être les suivantes par exemple :

- A bord d’un avion, ou
- Dans tout autre environnement où les risques d’interférence sur d’autres appareils ou services sont perçus ou identifiables comme dangereux.

Si vous n’êtes pas sûr de la réglementation applicable à l’utilisation d’appareils sans fil dans une organisation ou un environnement spécifique, (par exemple dans un aéroport) nous vous invitons àdemander l’autorisation d’utiliser ce produit avant sa mise en marche.

Informations concernant la réglementation

Nous déclinons toute responsabilité pour toute interférence radio ou télévision causée par des modifications non autorisées apportées à ce produit. La correction d’interférences causées par de telles modifications non autorisées sera la seule responsabilité de son utilisateur. Nousmêmes, les revendeurs officiels et les distributeurs ne sommes pas responsable de tout dégât ou de toute violation des règlements de l’État pouvant découler du non-respect de ces directives.

26-F-1

Lithium Battery / Pile au lithium

Lithium Battery!
This computer contains a lithium battery to enable the date, time, and other data to be stored. The battery should only be exchanged by authorized service personnel.
Warning!
A risk of explosion from incorrect installation or misapplication may possibly occur.

15-E-1

Pile au lithium!
Le micro-ordinateur renferme une pile au lithium qui permet de sauvegarder certaines données, notamment la date et l'heure. La pile ne doit être remplacée que par un technicien qualifié.
Danger ! Risque d'explosion en cas de non respect de cette mise en garde!

15-F-1

CD/DVD Drive Caution / Précautions pour le lecteur CD/DVD

<Only for model with CD/DVD Drive>

CAUTION!
THIS PRODUCT UTILIZES A LASER.
USE OF CONTROLS, ADJUSTMENTS OR PERFORMANCE OF PROCEDURES OTHER THAN THOSE SPECIFIED HEREIN MAY RESULT IN HAZARDOUS RADIATION EXPOSURE.
DO NOT OPEN COVERS AND DO NOT REPAIR YOURSELF.
REFER SERVICING TO QUALIFIED PERSONNEL.

12-E-1

<Pour modèle le lecteur CD/DVD uniquement>

AVERTISSEMENT!
CET APPAREIL UTILISE UN LASER.
L'UTILISATION DE COMMANDES OU DE RÉGLAGES OU L'EXÉCUTION DE PROCÉDURES AUTRES QUE CELLES SPÉCIFIÉES ICI PEUVENT PROVOQUER UNE EXPOSITION À DES RADIATIONS DANGEREUSES.
NE PAS OUVRIR LES COUVERCLES NI ESSAYER DE RÉPARER SOIMÊME.
CONFIER TOUT TRAVAIL D'ENTRETIEN À UN PERSONNEL QUALIFIÉ.

12-F-1

The following label is put on the bottom of the computer.
L'étiquette suivante se trouve en-dessous de l'ordinateur.

12-1-1

Battery Pack / Batterie

CAUTION:
Risk of Explosion if Battery is replaced by an Incorrect Type. Dispose of Used Batteries According to the Instructions.

58-E-1

ATTENTION:
Il y a risque d'explosion si la batterie est remplacée par une batterie de type incorrect.
Mettre au rebut les batteries usagées conformément aux instructions.

58-F-1

Battery pack model number	CF-VZSU0PW	CF-VZSU0LW	CF-VZSU0KW
Recommended charging condition (Constant voltage/current)	12.6 V / 2856 mA	12.6 V / 2135 mA	12.6 V / 2002 mA
Notice	● Dispose of used battery pack according to local ordinances and/or regulations. ● Do not expose this computer to temperatures greater than 60 °C {140 °F}.		

Energy Star

As an ENERGY STAR® Partner, Panasonic Corporation has determined that this product meets ENERGY STAR® guidelines for energy efficiency. By enabling available power management settings, Panasonic computers enter a low-power sleep mode after a period of inactivity, saving the user energy.
<For U.S.A.>
To learn more about power management, please visit the web site:
www.energystar.gov/index.cfm?c=power_mgt.pr_power_management

Outline of the International ENERGY STAR® Office Equipment Program
The international ENERGY STAR® Office Equipment Program is an international program that promotes energy saving through the use of computers and other office equipment. The program backs the development and dissemination of products with functions that effectively reduce energy consumption. It is an open system in which business proprietors can participate voluntarily. The targeted products are office equipment such as computers, displays, printers, facsimiles, and copiers. Their standards and logos are uniform among participating nations.
<For U.S.A.>
For information about ENERGY STAR®, refer to the following web site:
Web Site: www.energystar.gov

22-M-1

Safety Precautions

<Only for model with wireless WAN>
The following safety precautions must be observed during all phases of the operation, usage, service or repair of any Personal Computer or Handheld Computer incorporating wireless WAN modem. Manufacturers of the cellular terminal are advised to convey the following safety information to users and operating personnel and to incorporate these guidelines into all manuals supplied with the product. Failure to comply with these precautions violates safety standards of design, manufacture and intended use of the product. Panasonic assumes no liability for customer failure to comply with these precautions.

When in a hospital or other health care facility, observe the restrictions on the use of mobiles. Switch Personal Computer or Handheld Computer incorporating wireless WAN modem off, if instructed to do so by the guidelines posted in sensitive areas. Medical equipment may be sensitive to RF energy.
The operation of cardiac pacemakers, other implanted medical equipment and hearing aids can be affected by interference from Personal Computer or Handheld Computer incorporating wireless WAN modem placed close to the device. If in doubt about potential danger, contact the physician or the manufacturer of the device to verify that the equipment is properly shielded. Pacemaker patients are advised to keep their Personal Computer or Handheld Computer incorporating wireless WAN modem away from the pacemaker, while it is on.

Switch off Personal Computer or Handheld Computer incorporating wireless WAN modem before boarding an aircraft. Make sure it cannot be switched on inadvertently. The operation of wireless appliances in an aircraft is forbidden to prevent interference with communications systems. Failure to observe these instructions may lead to the suspension or denial of cellular services to the offender, legal action, or both.
For details on usage of this unit in aircrafts please consult and follow instruction provided by the airline.

Do not operate Personal Computer or Handheld Computer incorporating wireless WAN modem in the presence of flammable gases or fumes. Switch off the cellular terminal when you are near petrol stations, fuel depots, chemical plants or where blasting operations are in progress. Operation of any electrical equipment in potentially explosive atmospheres can constitute a safety hazard.

Your Personal Computer or Handheld Computer incorporating wireless WAN modem receives and transmits radio frequency energy while switched on. Remember that interference can occur if it is used close to TV sets, radios, computers or inadequately shielded equipment. Follow any special regulations and always switch off Personal Computer or Handheld Computer incorporating wireless WAN modem wherever forbidden, or when you suspect that it may cause interference or danger.

Road safety comes first! Do not use a Personal Computer or Handheld Computer incorporating wireless WAN modem while driving a vehicle. Do not place the computer with wireless WAN modem in an area where it could cause personal injury to the driver or passengers. It is recommended to stow the unit in the boot or secure stowage area while driving.
Do not place the computer with wireless WAN modem in an area over an air bag or in the vicinity where an air bag may deploy.
Air bags inflate with great force and if the computer with wireless WAN modem is placed in the air bag deployment area may be propelled with great force and cause serious injury to occupants of the vehicle.

SOS

IMPORTANT!
Personal Computer or Handheld Computer incorporating wireless WAN modem operate using radio signals and cellular networks cannot be guaranteed to connect in all conditions. Therefore, you should never rely solely upon any wireless device for essential communications, for example emergency calls.
Remember, in order to make or receive calls, Personal Computer or Handheld Computer incorporating wireless WAN modem must be switched on and in a service area with adequate cellular signal strength.
Some networks do not allow for emergency calls if certain network services or phone features are in use (e.g. lock functions, fixed dialing etc.). You may need to deactivate those features before you can make an emergency call.
Some networks require that a valid SIM card be properly inserted in Personal Computer or Handheld Computer incorporating wireless WAN modem.

For U.S.A.

Federal Communications Commission Radio Frequency Interference Statement

Note: This equipment has been tested and found to comply with the limits for a Class B digital device, pursuant to Part 15 of the FCC Rules. These limits are designed to provide reasonable protection against harmful interference in a residential installation. This equipment generates, uses and can radiate radio frequency energy and, if not installed and used in accordance with the instructions, may cause harmful interference to radio communications. However, there is no guarantee that interference will not occur in a particular installation. If this equipment does cause harmful interference to radio or television reception, which can be determined by turning the equipment off and on, the user is encouraged to try to correct the interference by one or more of the following measures:

- Reorient or relocate the receiving antenna.
- Increase the separation between the equipment and receiver.
- Connect the equipment into an outlet on a circuit different from that to which the receiver is connected.
- Consult the Panasonic Service Center or an experienced radio/TV technician for help.

Warning

To assure continued compliance, use only shielded interface cables when connecting to a computer or peripheral. Also, any changes or modifications not expressly approved by the party responsible for compliance could void the user's authority to operate this equipment.

This device complies with Part 15 of the FCC Rules. Operation is subject to the following two conditions:

(1) This device may not cause harmful interference, and
(2) This device must accept any interference received, including interference that may cause undesired operation.

FCC RF Exposure Warning:

<Only for model with wireless LAN/wireless WAN/Bluetooth>

- This equipment complies with FCC radiation exposure limits set forth for an uncontrolled environment.
- This equipment may not be co-located or operated with any other antenna or transmitter.
- This equipment may not be co-located or operated with any other antenna or transmitter.

- This device meets the government's requirements for exposure to radio waves. This device is designed and manufactured not to exceed the emission limits for exposure to radio frequency (RF) energy set by the Federal Communications Commission of the U.S. Government.

- The exposure standard for wireless device employs a unit of measurement known as the Specific Absorption Rate, or SAR. The SAR limit set by the FCC is 1.6 W/kg.

*Tests for SAR are conducted using standard operating positions accepted by the FCC with the device transmitting at its highest certified power level in all tested frequency bands. Although the SAR is determined at the highest certified power level, the actual SAR level of the device while operating can be well below the maximum value. This is because the device is designed to operate at multiple power levels so as to use only the poser required to reach the network. In general, the closer you are to a wireless base station antenna, the lower the power output.

Responsible Party: Panasonic Corporation of North America
Two Riverfront Plaza
Newark, NJ 07102
Support Contact: http://business.panasonic.com/support-computerstablets

6-M-1

USA Only: Disposal may be regulated in your community due to environmental considerations. For disposal or recycling information, please visit Panasonic website:
http://www.panasonic.com/environmental or call 1-888-769-0149

65-M-2

<US & Canada Only>
A lithium ion battery that is recyclable powers the product you have purchased.
Please call 1-800-8-BATTERY for information on how to recycle this battery.
<É.-U. et Canada seulement>
L'appareil que vous vous êtes procuré est alimenté par une batterie au lithium-ion.
Pour des renseignements sur le recyclage de la batterie, veuillez composer le
1-800-8-BATTERY.

48-M-1

For Used in Motor Vehicle / Pour L'utilisation Dans Un Véhicule Motorisé

Warning: Notebook Computer may be installed in a motor vehicle and visible to the driver only if used to support vehicle related functions such as vehicle information, system control, rear or side observation and navigation. If used for entertainment purpose, such as television reception or video play, it must be installed to the rear of the driver's seat where it will not be visible, directly or indirectly, to the operator of the motor vehicle. Check with individual state/provincial laws to determine lawful use of this product while operating within a motor vehicle.

Avertissement : L'ordinateur bloc-notes peut être installé dans un véhicule motorisé et dans le champ de vision du conducteur uniquement en tant que dispositif d'aide aux fonctions du véhicule, comme par exemple pour fournir des informations sur le véhicule, comme dispositif de contrôle de système, pour l'observation à l'arrière ou sur les côtés du véhicule, ainsi que pour fournir de l'information routière. Pour toute utilisation à fin de divertissement, comme par exemple pour regarder la télévision ou jouer à des jeux vidéo, il doit être installé à l'arrière du siège du conducteur, en un emplacement où il ne sera pas visible, ni directement ni indirectement, pour le conducteur du véhicule motorisé. Vérifiez les lois fédérales et nationales qui régissent l'utilisation légale de cet appareil à l'intérieur d'un véhicule motorisé.

35-M-1

<Only for model with wireless LAN/wireless WAN>

- The country code selection is not available to non-US model and all US model.

32-M-1

This product contains a Coin Cell Lithium Battery which contains Perchlorate Material - special handling may apply.
See www.dtsc.ca.gov/hazardouswaste/perchlorate/

38-M-1

For Canada

This Class B digital apparatus complies with Canadian ICES-003.
Cet appareil numérique de la classe B est conforme à la norme NMB-003 du Canada.

7-M-2

<Only for model with wireless LAN/Bluetooth>

Industry Canada

This product complies with RSS247 Industry Canada.
Operation is subject to the following two conditions;
(1) this device may not cause interference, and
(2) this device must accept any interference, including interference that may cause undesired operation of the device.

<Ne s'applique qu'aux modèes avec technologie Bluetooth/LAN sans fil/WAN sans fil>

Industrie Canada

Cet équipement est conforme à la norme CNR-247 d'ndustrie Canada.
Son fonctionnement est soumis aux deux conditions suivantes :
(1) ce dispositif ne peut produire de brouillage, et
(2) ce dispositif doit accepter le brouillage, y compris le brouillage pouvant entraîner le fonctionnement non désiré de l'appareil.

30-Ca-1-1

<Only for model with wireless LAN>

This product (local network devices) for the band 5150-5250 MHz is only indoor usage to reduce potential for harmful interference to co-channel Mobile Satellite systems.
High power radars are allocated as primary users (meaning they have priority) of 5250-5350 MHz and 5650-5850 MHz and these radars could cause interference and/or damage to LELAN devices.
The maximum antenna gain permitted for devices in the bands 5250-5350 MHz and 5470-5725 MHz shall comply with the e.i.r.p. limit; and the maximum antenna gain permitted for devices in the band 5725-5825 MHz shall comply with the e.i.r.p. limits specified for point-to-point and non point-to-point operation as appropriate.
The worst-case tilt angle(s) necessary to remain compliant with the e.i.r.p. elevation mask requirement set forth in Section 6.2.2(3) shall be clearly indicated.

<Ne s'applique qu'aux modèes avec technologie LAN sans fil>

Cet appareil (pour réseaux locaux radioélectriques) dans les bandes de fréquences 5150-5250 MHz est réervéàune utilisation àl'intéieur afin de réuire le risque d'interféence avec les systèmes satellites mobiles bicanaux.
Les radars forte puissance sont désignés comme étant les premiers utilisateurs (c'st-à-dire qu'ls ont la priorité) des bandes de fréquences 5250-5350 MHz et 5650-5850 MHz. Ces stations radars peuvent provoquer des interférences et/ou des dommages à ce périphérique.
Le gain maximal d'antenne permis pour les dispositifs utilisant les bandes 5250-5350 MHz et 5470-5725 MHz doit se conformer à la limite de p.i.r.e.;
le gain maximal d'antenne permis (pour les dispositifs utilisant la bande 5725-5825 MHz) doit se conformer à la limite de p.i.r.e. spécifiée pour l'exploitation point à point et non point à point, selon le cas.
les pires angles d'inclinaison nécessaires pour rester conforme à l'exigence de la p.i.r.e. applicable au masque d'élévation, et énoncée à la section 6.2.2 3), doivent être clairement indiqués.

30-Ca-2-1

<Only for model with wireless LAN/wireless WAN/Bluetooth>
Radiation Exposure Statement:

- The product comply with the Canada portable RF exposure limit set forth for an uncontrolled environment and are safe for intended operation as described in this manual. The further RF exposure reduction can be achieved if the product can be kept as far as possible from the user body or set the device to lower output power if such function is available.

<Ne s'applique qu'aux modèles avec technologie Bluetooth/LAN sans fil/WAN sans fil>

- Déclaration d'exposition aux radiations:

Le produit est conforme aux limites d'exposition pour les appareils portables RF pour les Etats-Unis et le Canada établies pour un environnement non contrôlé.
Le produit est sûr pour un fonctionnement tel que décrit dans ce manuel. La réduction aux expositions RF peut être augmentée si l'appareil peut être conservé aussi loin que possible du corps de l'utilisateur ou que le dispositif est réglé sur la puissance de sortie la plus faible si une telle fonction est disponible.

FOR USE WITH MODEL NO. : CF-AA5713A
POUR UTILISER AVEC MODÈLE : CF-AA5713A

20-Ca-1

<Only for model with external antenna>

External Antenna

This device has been designed to operate with the WWAN antenna having a maximum gain of 6 dBi for the 700 MHz, 850 MHz, 1700 MHz, 1900 MHz bands and 9 dBi for the 2500 MHz bands. WWAN Antenna having a higher gain is strictly prohibited per regulations of Industry Canada. The Required antenna impedance is 50 ohms.
To reduce potential radio interference to other users, the antenna type and its gain should be so chosen that the equivalent isotropically radiated power (EIRP) is not more than that required for successful communication.

<Uniquement pour les modèles avec l'antenne externe>

Antenne Externe

Ce dispositif a été conçu pour fonctionner avec l'antenne de réseau étendu sans fil (WWAN) avec un gain maximum de 6 dBi dans les bandes de 700 MHz, 850 MHz, 1 700 MHz ainsi que 1 900 MHz et 9 dBi dedans les bandes de 2 500 MHz. Les règlements d'Industrie Canada interdisent l'utilisation d'une antenne WWAN dont le gain serait supérieur à cette limite. L'antenne doit avoir une impédance de 50 ohms.
Afin de réduire le risque d'interférence radioélectrique aux autres utilisateurs des bandes de fréquences, le type d'antenne et son gain doivent être tels que la puissance isotrope rayonnée équivalente (PIRE) n'est pas plus élevée que le niveau requis pour assurer la communication.

32-Ca-1-1

Disposal of Old Equipment and Batteries
Only for European Union and countries with recycling systems

These symbols on the products, packaging, and/or accompanying documents mean that used electrical and electronic products and batteries must not be mixed with general household waste. For proper treatment, recovery and recycling of old products and batteries, please take them to applicable collection points, in accordance with your national legislation.
By disposing of them correctly, you will help to save valuable resources and prevent any potential negative effects on human health and the environment.
For more information about collection and recycling, please contact your local municipality.
Penalties may be applicable for incorrect disposal of this waste, in accordance with national legislation.

Note for the battery symbol (bottom symbol)

This symbol might be used in combination with a chemical symbol. In this case it complies with the requirement set by the Directive for the chemical involved.

36-E-1

For Australia

For Used in Motor Vehicle

Warning: Notebook Computer may be installed in a motor vehicle and visible to the driver only if used to support vehicle related functions such as vehicle information, system control, rear or side observation and navigation. If the Notebook Computer is to be used for work or entertainment purposes, such as television reception, video play or other work programs, it must be installed in a position where it will NOT:
(a) be visible, directly or indirectly, to the operator of the motor vehicle; or
(b) cause distraction to drivers of other motor vehicles.
Check with individual state laws to determine lawful use of this product while operating within a motor vehicle. If the visual display unit is, or is part of, a driver's aid, above rule is not applied. "Driver's aid" includes closed-circuit television security cameras, dispatch systems, navigational or intelligent highway and vehicle system equipment, rear view screens, ticket-issuing machines and vehicle monitoring devices.

35-A-1

For India

Declaration of Conformity with the requirements of the e-waste (Management and Handling) Rules, 2011.
(adopted by Notification S.O.1035(E) of Ministry of Environment and Forests)
The Product is in conformity with the requirements of Rule 13 of the e-waste Rules.
The content of hazardous substance with the exemption of the applications listed in SCHEDULE II of the e-waste Rules:
1. Lead (Pb) - not over 0.1% by weight;
2. Cadmium (Cd) - not over 0.01% by weight;
3. Mercury (Hg) - not over 0.1% by weight;
4. Hexavalent chromium (Cr6+) - not over 0.1% by weight;
5. Polybrominated biphenyls (PBBs) - not over 0.1% by weight;
6. Polybrominated diphenyl ethers (PBDEs) - not over 0.1% by weight.

For the purpose of recycling to facilitate effective utilization of resources, please return this product to a nearby authorized collection center, registered dismantler or recycler, or Panasonic service center when disposing of this product.
Please see the Panasonic website for further information on collection centers, etc.

http://www.panasonic.com/in/corporate/sustainability/panasonic-india-i-recycle-program.html
Service helpline: 1800 103 1333 or 1800 108 1333

68-M-2

First-time Operation

■ Preparation

① Check and identify the supplied accessories.
If you do not find the described accessories, contact your support office.

• AC Adaptor. 1

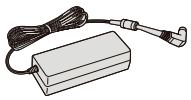

Model No: CF-AA5713A

• AC Cord 1

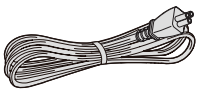

• Battery Pack . . . 1

Model No: CF-VZSU0PW

<Only for model with touchscreen>

• Soft Cloth 1

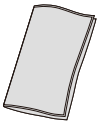

• OPERATING INSTRUCTIONS - Read Me First (This book) 1

Depending on the model, the following items are supplied.

• Battery Pack 1

Model No: CF-VZSU0KW

Getting Started

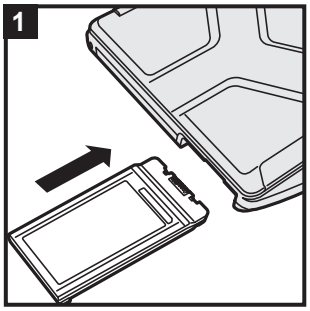

<For CF-VZSU0KW>

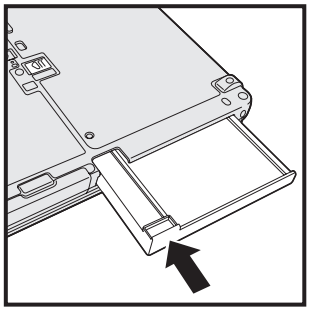

1 Insert the battery pack

Insert the battery pack until it touch to the secured position.

CAUTION

- Make sure the latch is securely locked. Otherwise the battery pack may fall when you carry the computer.
- Do not touch the terminals of the battery pack and the computer. Doing so can make the terminals dirty or damaged, and may cause malfunction of the battery pack and the computer.

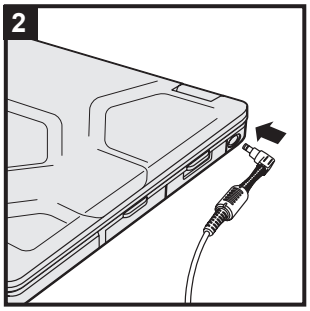

2 Connect your computer to a power outlet

The battery charging starts automatically.

CAUTION

- Do not disconnect the AC adaptor and do not switch the wireless switch to on until the first-time operation procedure is completed.
- When using the computer for the first time, do not connect any peripheral device (including wired LAN cable) except the battery pack and AC adaptor.
- **Handling the AC adaptor**
  Problems such as sudden voltage drops may arise during periods of thunder and lightning. Since this could adversely affect your computer, an uninterruptible power source (UPS) is highly recommended unless running from the battery pack alone.
- When the DC plug is not connected to the computer, disconnect the AC cord from your electrical outlet. Power is consumed simply by having the AC adaptor plugged into an electrical outlet.

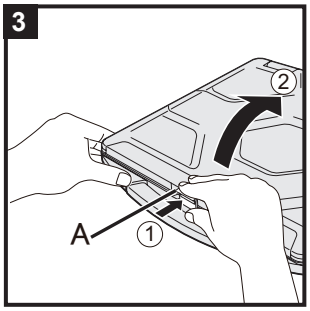

3 Open the display

① Push the top of the latch (A) to release it.
② Hold the side/ handle of the computer with either of your hands and then lift up the display to open.

CAUTION

- Do not open the display wider than necessary (180° or more), and do not apply excessive pressure to the LCD. Do not open or close the computer holding the edge of the LCD segment.

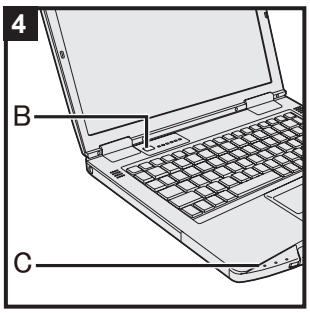

4 Turn on the computer

Press and hold the power switch ⏻ (B) until the power indicator (C) lights.

CAUTION

- Do not press the power switch repeatedly.
- The computer will be forcibly turned off if you press and hold the power switch for four seconds or longer.
- Once you turn off the computer, wait for ten seconds or more before you turn on the computer again.
- Do not perform the following operation until the drive indicator ⛁ turns off.
  - Connecting or disconnecting the AC adaptor
  - Pressing the power switch
  - Touching the keyboard, touchpad, touchscreen <only for model with touchscreen> or external mouse
  - Closing the display
  - Turn on/off the wireless switch
- When the CPU temperature is high, the computer may not start up to prevent overheating of the CPU. Wait until the computer cools down, and then turn the power on again. If the computer does not power on even after cooling down, contact Panasonic Technical Support (➔ "*OPERATING INSTRUCTIONS - Reference Manual*").
- Any changes from the default setting of the Setup Utility must not be made until the First-time Operation is completed.

5 Setup Windows

Follow the on-screen instructions.

- The computer restarts several times. Do not touch the keyboard, touchpad or touchscreen <only for model with touchscreen>, and wait until the drive indicator ⛁ has turned off.
- After the computer is turned on, the screen remains black or unchanged for a while, but this is not a malfunction. Wait for a moment until the Windows setup screen appears.
- During setup of Windows, use the touchpad and clicking to move the pointer and to click an item.
- Setup of Windows will take approximately about 5 minutes. Go to the next step, confirming each message on the display.
- You can set the Wireless Network after the setup of Windows is complete.
  If “Let’s get connected” is displayed, select “Skip this step”.
- We recommend that you set the password after the setup of Windows in complete.

CAUTION

- You can change the user name, image and security setting after setup of Windows.
- Remember your password. If you forget the password, you cannot use Windows. Creating a password reset disk beforehand is recommended.
- Use standard characters as a computer name: numbers 0 through 9, uppercase and lowercase letters from A to Z, and the hyphen (-) character. Do not use the following words and characters for user name: CON, PRN, AUX, CLOCK$, NUL, COM1 to COM9, LPT1 to LPT9, LPT, &, space.
  If the error message “The computer name is not valid” appears, check if characters other than the above are not entered. If the error message still remains on the display, set the key entry mode to English (“ENG”) and enter characters.

6 Restart the computer

① Click ⊞ (Start).
② Click ⏻ (Power) - [Restart].

- A portion of the Panasonic PC Settings Utility functions will be enabled after the computer restarts.

NOTE

- When the “Emergency notification setting” screen appears, read the on-screen messages carefully. Follow the on-screen instructions.
  You can set the “Emergency notification setting” after the setup of Windows is complete.

7 Update the on-screen manual

① Connect to the internet. Sign in Windows as an administrator.
For further information, refer to *Connect to a network*.

② Update the on-screen manual.
Click (Start) - [Panasonic] - [Panasonic PC Settings Utility], and then click [Support] - [Manual] - [Launch Manual Selector].
Follow the on-screen instructions.

8 Create a recovery disc

A recovery disc allows you to install OS and restore its factory default condition, in case, the recovery partition of the HDD is damaged.
We recommend creating a recovery disc before you begin using the computer.
Refer to ➔ *Reference Manual* “Create a Recovery Disc” about creating the disc.

NOTE

- To set the password, proceed as follows.
  ① Click (Start) - (Settings) - [Accounts] - [Sign-in options].
  ② Click [Add] under “Password”.
- Set the key entry mode to English (“ENG”) and enter characters.
- Remember your password. If you forget the password, you cannot use Windows. Creating a password reset disk beforehand is recommended.

■ Latest Information on Windows 10

When Microsoft® Windows® 10 is updated, the screen display or operation procedures may be changed.
For the latest information on Windows 10, see the following web page.
http://pc-dl.panasonic.co.jp/itn/addendum/

Panasonic Corporation
Osaka, Japan

Panasonic System Communications Company of North America
Two Riverfront Plaza
Newark, NJ 07102

Panasonic Canada Inc.
5770 Ambler Drive, Mississauga,
Ontario L4W 2T3

Panasonic Australia Pty. Limited
ACN 001 592 187 ABN 83 001 592 187
1 Innovation Road, Macquarie Park NSW 2113

Web Site : https://panasonic.net/cns/pc/

HS0517-0
DHQX1361ZA/T1

© Panasonic Corporation 2017
Printed in Taiwan