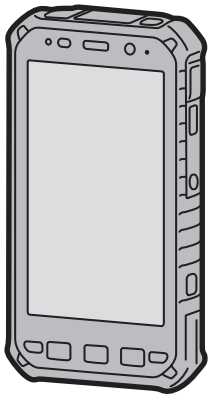

Panasonic®

Operating Instructions
Tablet Computer

Model No. **FZ-E1** series

Thank you for purchasing a Panasonic product.
Please read this document carefully before using the product and keep this document in a safe place for future reference.

For detailed information about this product, refer to the Reference Manual, which is available by flicking the Start screen to the left, then tapping **[Online Manual]** in the App list. (Download required.)

Table of Contents

Introduction 3

Safety precautions 3
Regulatory information 12
Handling cautions 22
Trademark and license information 25
Terms and illustrations in this document 27
Disclaimers 28

Getting Started 29

Confirming the included items 29
Description of parts 30
Opening and closing the interface cover 34
Removing the battery cover 35
Attaching the battery cover 36
Installing SIM cards (certain models only) 38
Installing an SD card 39
Installing the battery 40
Charging the battery 40
Turning the unit on and off 41
Screen display 42
Basic operations 44

Troubleshooting 46

Appendix 51

Replacing the battery 51
Enabling the internal heater 51
Factory data reset 52
Specifications 52
Accessories 58
Limited warranty 59

Introduction

Safety precautions

To reduce the risk of injury, loss of life, electric shock, fire, malfunction, and damage to equipment or property, always observe the following safety precautions.

Explanation of symbol word panels

The following symbol word panels are used to classify and describe the level of hazard, injury, and property damage caused when the denotation is disregarded and improper use is performed.

⚠ **DANGER**	Denotes potential hazards that will result in serious injury or death.
⚠ **WARNING**	Denotes potential hazards that could result in serious injury or death.
⚠ **CAUTION**	Denotes potential hazards that could result in minor injury.
NOTICE	Denotes potential hazards that could result in property damage.

The following symbols are used to classify and describe the type of instructions to be observed.

⃠	This symbol is used to alert users to specific operating procedures that must not be performed.
❗	This symbol is used to alert users to specific operating procedures that must be followed in order to operate the product safely.
⚠	This symbol is used to alert users to specific operating procedures for which special attention is required.

DANGER	
	When using the product for extended periods, do not expose your skin to the product or AC adaptor for a prolonged period. Generated heat can cause low-temperature burns.

WARNING	
	Do not disassemble, repair, or modify the product. These may cause electric shock or fire.
	Do not insert foreign objects into the product. This may cause the battery to short circuit or overheat, which may result in fire or electric shock.
	Do not allow conductive metallic materials to touch the expansion bus connector. This may cause a short circuit and overheating, which may result in rupture or fire.
	Use only specified batteries. Use of unspecified batteries may result in electrolyte leakage, overheating, rupture, or fire.
	Use only specified AC adaptors. Use of unspecified AC adaptors may result in overheating, fire, or rupture.

	Stop using the product if any of the following occurs. – Product emits smoke, unusual sound, or unusual smell – Water or foreign object enters the product – Product is damaged – Product becomes unusually hot Failure to do so may result in fire or electric shock. Turn the product off, disconnect it from the power supply, and then remove the battery. Contact your technical support representative for support or repair.
	Do not touch the product or cables during lightning storms if the product is connected to an AC adaptor. There is a remote chance of electric shock.
	Close the headset jack cover and interface cover when using the product near water or other liquids, and in areas with a high concentration of moisture, steam, dust, oily vapors, etc. Foreign material that enters the product may cause fire or electric shock. If foreign material enters the product, turn the product off, disconnect it from the power supply, and then remove the battery. Contact your technical support representative for support or repair.
	Keep SD cards out of the reach of infants and small children. Small objects are suffocation and choking hazards. In the event of accidental swallowing, seek medical help immediately.
	Keep SIM cards out of the reach of infants and small children. Small objects are suffocation and choking hazards. In the event of accidental swallowing, seek medical help immediately.

	Stop using the product immediately and consult your doctor if you feel any discomfort when staring at flashing lights on the screen. A very small percentage of individuals may experience seizures or blackouts when exposed to certain light patterns or flashing lights for extended periods.
	Do not use the product near automatic control equipment such as automatic doors, fire alarms, etc. RF signals generated by the product may interfere with the proper operation of such equipment.
	Do not leave any water droplets on the product. Water droplets may cause the DC input jack, micro USB port, or headset jack to short circuit.
	Do not puncture the product with a sharp object. This may cause overheating or fire.
	Do not turn the volume up too loud when using headphones. Listening at high volumes for extended periods may result in loss of hearing.
	Do not operate the product while walking, driving, riding a bicycle, etc. Being distracted while engaging in these kinds of activities can cause accidents or falls.
	Do not use headphones while driving or in potentially dangerous areas or situations. Your inability to hear the sounds around you can cause accidents. Take special care at rail crossings, station platforms, roads, construction sites, etc.
	For models with an optional barcode reader: **Do not look directly at the red beam for an extended period or point the barcode reader at another person's eyes.** This may damage the eyes.

	Clean dust and other debris on the AC plug regularly. If dust or other debris accumulates on the plug, humidity, etc. may cause a defect in the insulation, which may result in a fire. • Pull the plug, and wipe it with a dry cloth. Pull the plug if the computer is not being used for a long period of time.
	Do not do anything that may damage the AC cord, the AC plug, or the AC adaptor. Do not damage or modify the cord, place it near hot tools, bend, twist, or pull it forcefully, place heavy objects on it, or bundle it tightly. Continuing to use a damaged cord may result in fire, short circuit, or electric shock.
	Do not expose the AC cord, AC adaptor, or the battery to water or other liquids. Doing so may cause a short circuit, generation of heat, overheating, or rupture, which may result in a fire, electric shocks, and/or injury.
	Do not pull or insert the AC plug if your hands are wet. Electric shock may result.
	Do not connect the AC adaptor to a power source other than a standard household AC outlet. Otherwise, a fire due to overheating may result. Connecting to a DC/AC converter (inverter) may damage the AC adaptor. On an airplane, only connect the AC adaptor/ charger to an AC outlet specifically approved for such use.
	Insert the AC plug completely. If the plug is not inserted completely, fire due to overheating or electric shock may result. • Do not use a damaged plug or loose AC outlet.

⚠ CAUTION	
!	**If glass components are damaged, be careful of broken glass or internal components that may become exposed.** Failure to do so can cause injury.
⊘	**Do not place the product on an unstable surface.** The product may drop, resulting in injury.
!	**Take a 10–15 minute break every hour when using the product.** Using the product continuously for extended periods may cause strain injuries and may have detrimental health effects on your eyes, hands, or other parts of your body.
⊘	**Do not look directly at the flash or point it at another person's eyes.** This may damage the eyes or cause temporary loss of eyesight which could result in an accident.
⊘	**Do not leave the product in extremely high temperature environments for an extended period.** Leaving the product where it will be exposed to extremely high temperatures, such as near fire or in direct sunlight, may deform the product or cause damage or malfunction to its internal components. Using the product in these conditions may cause short circuit, insulation defects, etc., which may in turn cause fire or electric shock.
⊘	**Do not expose the skin to the product when using the product in hot or cold environments.** Burns, low-temperature burns, or frostbite may result. If direct contact with the skin is necessary, perform the operation as quickly as possible.

	Turn down the volume before connecting headphones. After connecting the headphones, increase the volume gradually. If you connect headphones when the volume is set too high, your ears may be exposed to excessively high volume which may damage your hearing.
	Do not stack the product. If balance is lost, the product may fall over or drop, resulting in an injury.
	For models with an optional barcode reader: **Do not look directly at the white beam for an extended period or point the barcode reader at another person's eyes.** This may damage the eyes.
	Hold the plug when unplugging the AC plug. Pulling on the cord may damage the cord, resulting in a fire or electric shock.
	Do not move this product while the AC plug is connected. The AC cord may be damaged, resulting in fire or electric shock. • If the AC cord is damaged, unplug the AC plug immediately.
	Do not subject the AC adaptor to any strong impact. Using the AC adaptor after a strong impact such as being dropped may result in electric shock, short circuit, or fire. • Contact your technical support representative for support or repair.

NOTICE
Do not place objects on the surface of the product or press down hard on the product with sharp objects. The screen surface could be scratched.
When in low-temperature environments, dry off the product if it becomes wet. If the product becomes wet in temperatures of 0 °C (32 °F) or below, freeze damage may occur.
Confirm the safety and security of software before downloading or installing it on the product. Installing malware or viruses can cause malfunction and the disclosure of any private information stored in the product, or may cause excessive sound volume.
Turn off the product before removing the SIM card or SD card. Failure to do so can result in data loss or damage to the SIM card, the SD card, or the product.
Do not place the product near a television or radio receiver. This may cause television or radio interference.

Battery

⚠ DANGER	
⃠	**The battery is for use solely with the specified product. Do not use it with any other products.** Overheating, fire, or rupture may result.
⃠	**Do not disassemble, modify, or insert sharp foreign objects into the battery.** Electrolyte leakage, overheating, fire, or rupture may result.

⊘	**Do not crush, bend, deform, puncture, shred, throw, or apply high pressure to the battery.** These may cause a short circuit, electric shock, electrolyte leakage, overheating, rupture, or fire.
⊘	**Do not use the battery if it becomes noticeably damaged or deformed.** Electrolyte leakage, overheating, smoke, rupture, or fire may result.
⊘	**Do not short the positive (+) and negative (–) contacts. Do not carry the battery around or store it together with necklaces, hairpins, etc.** Overheating, fire, or rupture may result.
⊘	**Do not throw the battery into a fire or expose it to excessive heat.** Overheating, fire, or rupture may result.
!	**Keep the battery away from extreme heat, such as fire and direct sunlight.** Electrolyte leakage, overheating, fire, or rupture may result.
!	**When charging the battery with a battery charger/ cradle, use only the specified charger/cradle.** Overheating, fire, or rupture may result.

⚠ **WARNING**	
⊘	**Do not subject the battery to strong impact, vibration, or rough handling.** This may cause electrolyte leakage, overheating, rupture, or fire.

	Do not charge the battery using methods other than those specified. Improper battery use may cause electrolyte leakage, overheating, rupture, or fire.
	If electrolyte from the battery comes into contact with the eyes, skin, or clothing, rinse it off thoroughly. Electrolyte may cause blindness if it comes into contact with the eyes. If contact occurs, flush the eyes with clean water and seek medical advice.
	If the battery smells or leaks electrolyte, keep the battery away from fire. Overheating, fire, or rupture may result.
	Do not place the battery in microwave ovens or pressurized containers. Sudden application of heat may damage the battery's case, resulting in electrolyte leakage, overheating, smoke, rupture, or fire.

Regulatory information

This product and your health

This product, like other radio devices, emits radio frequency electromagnetic energy. Because this product operates within the guidelines found in radio frequency safety standards and recommendations, we believe this product is safe for use by consumers. These standards and recommendations reflect the consensus of the scientific community and result from deliberations of panels and committees of scientists who continually review and interpret the extensive research literature. In some situations or environments, the use of this product may be restricted by the proprietor of the building or responsible representatives of the organization. These situations may for example include:

- Using this product on board of airplanes, or

- In any other environment where the risk of interference to other devices or services is perceived or identified as harmful.

If you are uncertain of the policy that applies on the use of wireless devices in a specific organization or environment (e.g. airports), you are encouraged to ask for authorization to use this product prior to turning on the product.

Information to the user

We are not responsible for any radio or television interference caused by unauthorized modification of this product. The correction of interference caused by such unauthorized modification will be the responsibility of the user. We and our authorized resellers or distributors are not liable for damage or violation of government regulations that may arise from failing to comply with these guidelines.

Additional safety precautions

Posted facilities

- Turn off the product when in hospitals, health care facilities, or any facility where posted notices require you to do so. Hospitals and health care facilities may be using equipment that could be sensitive to external RF energy.

Pacemakers

- The Health Industry Manufacturers Association recommends that a minimum separation of six (6) inches be maintained between a handheld wireless product and a pacemaker to avoid potential interference with the pacemaker. These recommendations are consistent with the independent research by and recommendations of Wireless Technology Research.
- Persons with pacemakers:
  - Should always keep this product more than six (6) inches from their pacemaker when this product is turned on;
  - Should use the ear opposite the pacemaker to minimize the potential for interference;
  - Should not carry this product in a breast pocket;

– Should turn off the product immediately if there is any reason to suspect that interference is taking place.

Hearing aids

- Some digital wireless products may interfere with some hearing aids. In the event of such interference, consult the manufacturer of your hearing aid to discuss alternatives.

Other medical devices

- If you use any other personal medical device, consult the manufacturer of your device to determine if it is adequately shielded from external RF energy. Your physician may be able to assist you in obtaining this information.

Aircraft

- Turn off the product after boarding an aircraft, when instructed by flight staff. Obey instructions from flight staff regarding the use of the product in flight. Using this product in an aircraft may be hazardous to the aircraft's operation and disrupt wireless communication, and may also be illegal.

Potentially explosive atmosphere

- Turn off the product in areas where a potentially explosive atmosphere exists and obey all signs and instructions. Sparks in such areas could cause an explosion or fire resulting in injury or even death.
- Areas with potentially explosive atmosphere may include fueling areas, chemical plants, below deck on boats, fuel or chemical transfer or storage facilities, vehicles using petroleum or natural gas, or areas where the atmosphere contains particles such as grain, dust, or metallic powders, and any other area where you would normally be advised to turn off your vehicle engine.

Electronic devices

- This product receives and transmits radio frequency signals while switched on. Most electronic equipment is shielded from RF signals. However, certain electronic equipment may not be

shielded against the RF signals from this product. Therefore, the use must be restricted in certain situations to avoid interference.

Driving

- Give full attention to driving. Driving safely is your first responsibility.
- Pull off the road and park before placing or answering a call. It is unsafe to operate the product while driving.
- Check the laws and regulations in the areas where you drive, and always obey them.
- Only qualified personnel should install the product in a vehicle. Check regularly that the product is securely mounted in your vehicle and operating properly.
- Do not place or install the product in the area over the air bag or in the air bag deployment area. If the air bag inflates, serious injury and/or damage could result.
- RF signals may affect improperly installed or inadequately shielded electronic systems in motor vehicles. Consult the manufacturer (or its representative) of the vehicle and any equipment that has been added to the vehicle regarding the use of class B devices.
- Use hands-free operation, if available and legally permitted.

Emergency communications

- Never rely solely on a mobile product for essential or emergency communications. Network connections can be affected by remaining battery level, radio signals, service networks, and other conditions, and as a result, emergency communications cannot be guaranteed in all conditions.

Antenna

- Do not replace the antenna. Unauthorized antennas, modifications, or attachments could damage the product and may violate FCC regulations.
- Do not touch or cover the antenna area while the product is on. Call quality, power levels, and the overall performance of the product may be affected.

Volume

- Do not turn the volume up too loud when using headphones. Exposure to excessive sound pressure levels for extended periods may cause hearing damage. Additionally, being unable to hear sounds in your environment may lead to accidents.

Laser device caution

(for models with an optional barcode reader)

CAUTION!
THIS PRODUCT UTILIZES A LASER.
USE OF CONTROLS, ADJUSTMENTS OR PERFORMANCE OF PROCEDURES OTHER THAN THOSE SPECIFIED HEREIN MAY RESULT IN HAZARDOUS RADIATION EXPOSURE.
DO NOT OPEN COVERS AND DO NOT REPAIR YOURSELF.
REFER SERVICING TO QUALIFIED PERSONNEL.

This product is using lasers that comply with DHHS RULE 21 CFR CHAPTER I, SUBCHAPTER J, EN60825-1:2007 and IEC60825-1:2007 regulations.
This product utilizes a “Class 2” laser.
Class 2 laser readers use a low power, visible diode. As with any very bright light source, such as the sun, the user should avoid staring directly into the light beam. Momentary exposure to a Class 2 laser is not known to be harmful.

Caution: Procedures other than those specified herein may result in hazardous radiation exposure.

Labeling and device location

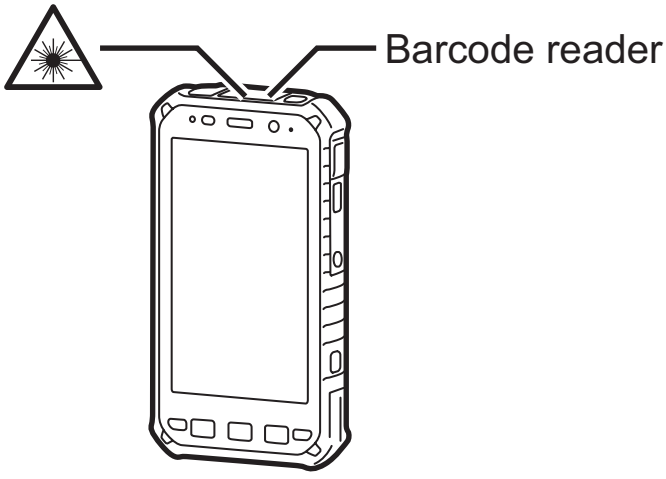

Intended use

- This product is not intended for use as, or as part of, nuclear equipment/systems, air traffic control equipment/systems, aircraft cockpit equipment/systems*1, medical devices or accessories*2, life-support systems or other equipment/devices/systems that are involved with ensuring human life or safety. Panasonic will not be responsible for any liability resulting from the use of this product arising out of the foregoing uses.
  - *1 Aircraft cockpit equipment/systems include Class 2 Electrical Flight Bag (EFB) Systems and Class 1 EFB Systems when used during critical phases of flight (e.g., during take-off and landing) and/or mounted on to the aircraft. Class 1 EFB Systems and 2 EFB Systems are defined by FAA: AC (Advisory Circular) 120-76A or JAA: JAA TGL (Temporary Guidance Leaflets) No.36.
  - *2 As defined by the European Medical Device Directive (MDD) 93/42/EEC.
- Panasonic cannot guarantee any specifications, technologies, reliability, safety (e.g., Flammability/Smoke/Toxicity/Radio Frequency Emission, etc.) requirements related to aviation standards and medical equipment standards that differ from the specifications of our COTS (Commercial-Off-The-Shelf) products.
- This product is not intended for use in medical equipment including life-support systems, air traffic control systems, or other

equipment, devices or systems that are involved with ensuring human life or safety. Panasonic cannot be held responsible in any way for any damages or loss resulting from the use of this unit in these types of equipment, devices or systems, etc. This product has been designed so as to minimize shock to the LCD, the leakage of liquid (e.g., water) on to the buttons, etc., but no warranty is provided against such trouble. Therefore, as a precision instrument, be extremely careful in the handling of the product.

For USA models

FCC Part 15 information

This product has been tested and found to comply with the limits for a Class B digital device, pursuant to Part 15 of the FCC Rules. These limits are designed to provide reasonable protection against harmful interference in a residential installation.
This product generates, uses and can radiate radio frequency energy and, if not installed and used in accordance with the instructions, may cause harmful interference to radio communications. However, there is no guarantee that interference will not occur in a particular installation.
If this product does cause harmful interference to radio or television reception, which can be determined by turning the product off and on, the user is encouraged to try to correct the interference by one or more of the following measures.

- Reorient or relocate the receiving antenna.
- Increase the separation between the product and receiver.
- Connect the product to an outlet on a circuit different from that to which the receiver is connected.
- Consult the dealer or an experienced radio/TV technician for help.

FCC caution

To assure continued FCC emission limit compliance, use only shielded interface cables when connecting to computer or peripheral devices. Any changes or modifications not expressly approved by the

party responsible for compliance could void the user's authority to operate this equipment.

This product complies with part 15 of the FCC Rules. Operation is subject to the following two conditions:

1. This product may not cause harmful interference, and
2. This product must accept any interference received, including interference that may cause undesired operation.

FCC RF exposure information

This product meets the government’s requirements for exposure to radio waves. This product is a radio transmitter and receiver.
This product is designed and manufactured not to exceed the emission limits for exposure to radio frequency (RF) energy set by the Federal Communications Commission of the U.S. Government.
The guidelines are based on standards that were developed by independent scientific organization through periodic and thorough evaluation of scientific studies.
The standards include a substantial safety margin designed to assure the safety of all persons, regardless of age and health.
The exposure standard for wireless handsets employs a unit of measurement known as the Specific Absorption Rate, or SAR. The SAR limit set by the FCC is 1.6 W/kg.
The tests are performed in positions and locations (e.g., at the ear and worn on the body) as required by the FCC for each model.
The highest SAR value for this product as reported to the FCC when tested for use at the ear is 0.105 W/kg, and when worn on the body in a holder or carry case, is 0.530 W/kg.
For body-worn operation, this product has been tested and meets FCC RF exposure guidelines when used with a Panasonic accessory designated for this product and when used with an accessory that contains no metal and that positions the mobile device a minimum of 1.0 cm from the body.
Use of other accessories may not ensure compliance with FCC RF exposure guidelines.

The FCC has granted an Equipment Authorization for this product with all reported SAR levels evaluated as in compliance with the FCC RF emission guidelines.
SAR information on this product is on file with the FCC and can be found by searching for the product's FCC ID number at http://www.fcc.gov/oet/ea/fccid. To find the FCC ID number for your product, first remove the battery pack. The FCC ID number is printed on the nameplate underneath.

Wi-Fi use

High power radars are allocated as primary users of the 5.25 to 5.35 GHz and 5.65 to 5.85 GHz bands. These radar stations can cause interference with and/or damage this product.

Using hearing aids with mobile devices

When some wireless mobile devices are used near some hearing devices (hearing aids and cochlear implants), users may detect a buzzing, humming, or whining noise. Some hearing devices are more immune than others to this interference noise, and mobile devices also vary in the amount of interference they generate. In the event of interference you may want to consult your hearing aid supplier to discuss solutions.
The wireless telephone industry has developed ratings for some of their mobile devices, to assist hearing device users in finding mobile devices that may be compatible with their hearing devices. Not all mobile devices have been rated. Mobile devices that are rated have the rating on their box or label located on the box.
The ratings are not guarantees. Results will vary depending on the user's hearing device and hearing loss. If your hearing device happens to be vulnerable to interference, you may not be able to use a rated mobile device successfully. Trying out the mobile device with your hearing device is the best way to evaluate it for your personal needs.
M-Ratings: Mobile devices rated M3 or M4 are likely to generate less interference to hearing devices than mobile devices that are not labeled. M4 is the better/higher of the two ratings.

T-Ratings: Mobile devices rated T3 or T4 are likely to be more usable with a hearing device's telecoil ("T-Coil Switch" or "Telephone Switch") than unrated mobile devices. T4 is the better/higher of the two ratings. (Note that the hearing aid telecoil must be activated in order for it to function, and that not all hearing devices have telecoils in them.)
Hearing devices may also be measured for immunity to this type of interference. Your hearing device manufacturer or hearing health professional may help you find results for your hearing device. The more immune your hearing aid is, the less likely you are to experience interference noise from mobile devices.
The HAC rating and measurement procedure are described in the American National Standards Institute (ANSI) C63.19 standard.

Hearing aid compatibility

This mobile device has been tested and rated for use with hearing aids for some of the wireless technologies that it uses. However, there may be some newer wireless technologies used in this mobile device that have not been tested yet for use with hearing aids. It is important to try the different features of this mobile device thoroughly and in different locations, using your hearing aid or cochlear implant, to determine if you hear any interfering noise. Consult your service provider or the manufacturer of this mobile device for information on hearing aid compatibility. If you have questions about return or exchange policies, consult your service provider or mobile retailer.

Responsible party

Panasonic Corporation of North America
Two Riverfront Plaza, Newark, NJ 07102
Support contact: http://www.panasonic.com/contactinfo

Disposal

USA Only: Disposal may be regulated in your community due to environmental considerations.
For disposal or recycling information, please visit Panasonic website: http://www.panasonic.com/environmental or call 1-888-769-0149.

Caution

Risk of explosion if battery is replaced by an incorrect type.
Dispose of used batteries according to the instructions.

Recycle information

A lithium ion battery that is recyclable powers the product you have purchased.
Please call 1-800-8-BATTERY for information on how to recycle this battery.

Handling cautions

General use

- Use only specified accessories.
- This product has been tested to meet strict MIL-STD-810G standards (for vibration and shock), however, as with any portable devices, precautions should be taken to avoid any damage.
- To prevent liquids, sand, dust, or any foreign objects from entering the product, always keep the covers clean and make sure to firmly close them after opening. Take care not to get anything caught between the covers and product.
- If the product's operating system is upgraded, product functions and operating procedures may change and certain apps may not function any longer.
- It is illegal in many areas to record a call without permission. Always ask the other party for permission before recording a call.

Battery

- The battery is a consumable item, and battery life varies with usage conditions. Typical battery life is approximately one year or about 500 charge cycles. As the battery reaches the end of its life, the amount of time it can be used becomes dramatically shorter and repeated charging does not restore its performance. When

this occurs, the battery should be replaced with a new one. Contact your technical support representative.

- The battery may become warm during charging and during normal use. This is normal.
- Charge the battery in environments with an ambient temperature of 10 °C to 35 °C (50 °F to 95 °F).
- Battery charging will not start if the internal temperature of the battery is below 0 °C (32 °F) or above 50 °C (122 °F).
- The product prevents overcharging of the battery by charging only when the remaining battery power is less than approximately 95 % of its full capacity.
- If the product will not be used for an extended period (i.e., a month or more), charge or discharge (use) the battery until the remaining battery level becomes 30 % to 40 % and then store the product in a cool, dry place.
- Store the battery in environments with an ambient temperature of -20 °C to 35 °C (-4 °F to 95 °F). If the battery is stored in other environments, battery performance and battery life may be reduced.
- If battery charging is not completed after the specified charging time has passed, remove the battery from the unit. The battery protection device may be damaged.
- Do not touch the terminals of the battery. Failure to observe this may cause poor contact.
- If the terminals of the battery become clogged with foreign matter, it may be difficult to remove the foreign matter and may result in damage to the unit.
- When storing or transporting the battery, make sure that the battery's terminals do not become dirty and that no foreign objects or debris become attached to the battery's terminals.

Maintenance

- If the product becomes wet or dirty, wipe the affected areas with a soft cloth, then shake out the liquid from the product. Liquid that remains on the surface of the screen may cause staining.
- Do not dry the product with an appliance or heat source such as a microwave oven or dryer.

- For typical cleaning, wipe the product with a soft, dry cloth, such as gauze. An alcohol-based disinfectant may be used if necessary. You may also dip a soft cloth in water-diluted detergent and wring it thoroughly before wiping the product.
- Do not apply water or detergent directly to the product. Liquid may enter the product and cause malfunction or damage.
- Do not clean the product with agents that contain ester, strong alkaline, benzene, or thinner as they may harm the surface of the product and cause discoloration, etc. Do not use commercially-available household cleaners and cosmetics, as they may contain components that harm the surface of the product.

Extreme environments

- The product's internal heater, if enabled (page 51), will activate in order to warm the product when its temperature is -12 °C (10.4 °F) or colder.

Protecting your data

- To prevent accidental loss of data, we recommend that you keep a separate record of any important data that you store in the product, SIM card, and SD card.
- To prevent the unintended disclosure of private information, always confirm the destination before sending messages, file attachments, or any other communications, such as email.
- Before disposing of the product or handing the product over to a third party, remove the SIM card, SD card, and any other accessories.
- Before disposing of the product or handing the product over to a third party, perform a factory data reset (page 52) to erase any data stored in the product.
- Before using Wi-Fi or Bluetooth features, take appropriate action to secure your data.

Trademark and license information

Trademarks

- The Bluetooth® word mark and logos are registered trademarks owned by Bluetooth SIG, Inc., and any use of such marks by Panasonic Corporation is under license.
- microSDXC Logo is a trademark of SD-3C, LLC.
- The N-Mark logo is a trademark or registered trademark of NFC Forum.
- Wi-Fi, the Wi-Fi logo, the Wi-Fi CERTIFIED logo and Wi-Fi CERTIFIED are trademarks or registered trademarks of Wi-Fi Alliance.
- Microsoft and Windows are either registered trademarks or trademarks of Microsoft Corporation in the United States and/or other countries.
- All other trademarks identified herein are the property of their respective owners.

License information

- This product is licensed under the MPEG-4 patent portfolio license, AVC patent portfolio license and VC-1 patent portfolio license for the personal use of a consumer or other uses in which it does not receive remuneration to (i) encode video in compliance with the MPEG-4 Visual Standard, AVC Standard and VC-1 Standard ("MPEG-4/AVC/VC-1 Video") and/or (ii) decode MPEG-4/AVC/VC-1 Video that was encoded by a consumer engaged in a personal activity and/or was obtained from a video provider licensed to provide MPEG-4/AVC/VC-1 Video.
  No license is granted or shall be implied for any other use. Additional information may be obtained from MPEG LA, L.L.C. See http://www.mpegla.com.
- This product is protected by certain intellectual property rights of Microsoft Corporation and third parties. Use or distribution of such

technology outside of this products is prohibited without a license from Microsoft or an authorized Microsoft subsidiary and third parties.

Terms and illustrations in this document

- Panasonic Corporation and/or its affiliates are referred to collectively as “we” or “Panasonic”.
- This product supports microSD, microSDHC, and microSDXC memory cards. In this document, the term “SD card” is used as a generic term for any supported memory card.
- This product supports micro SIM cards (certain models only). In this document, the term “SIM card” is used as a generic term for any supported SIM card.
- Some illustrations in this document are simplified to help your understanding and may look different from the actual product.
- Information in this document is subject to change without notice.
- For the latest information about optional products, refer to the product catalogs, etc.

Disclaimers

Panasonic shall not be liable for loss of data or other incidental or consequential damages resulting from the use of this product. This product can download, store, forward, and receive additional content, such as applications, ringtones, contact information, and media files. The use of such content may be restricted or prohibited by the rights of third parties, including but not limited to restriction under applicable copyright laws. You are entirely responsible for additional content that you download to or forward from this product; Panasonic is not responsible for such content or its use. Before using such content, it is your responsibility to verify that your intended use is properly licensed or is otherwise authorized. Panasonic does not warrant or guarantee the accuracy, integrity or quality of any additional content or any other third-party content. Under no circumstances will Panasonic be liable in any way for the improper use of additional content or other third-party content by this product or its operator. This document and any related product documentation may refer to services and applications that are provided by third parties. The use of such services or programs may require separate registration with the third party provider and may be subject to additional terms of use. For applications accessed on or through a third-party web site, please review the web sites' terms of use and applicable privacy policy in advance. Panasonic does not warrant or guarantee the availability or performance of any third-party web sites, services, or applications.

Getting Started

Confirming the included items

The following items are included. If any items are missing, please contact your technical support representative.

– **Main unit** ×1
– **Battery** ×1
– **Battery cover** ×1
– **Operating Instructions** (this document) ×1[*1]

*1 Please read the separate Windows Embedded 8.1 Handheld Software License Terms before using this product.

Description of parts

Front view

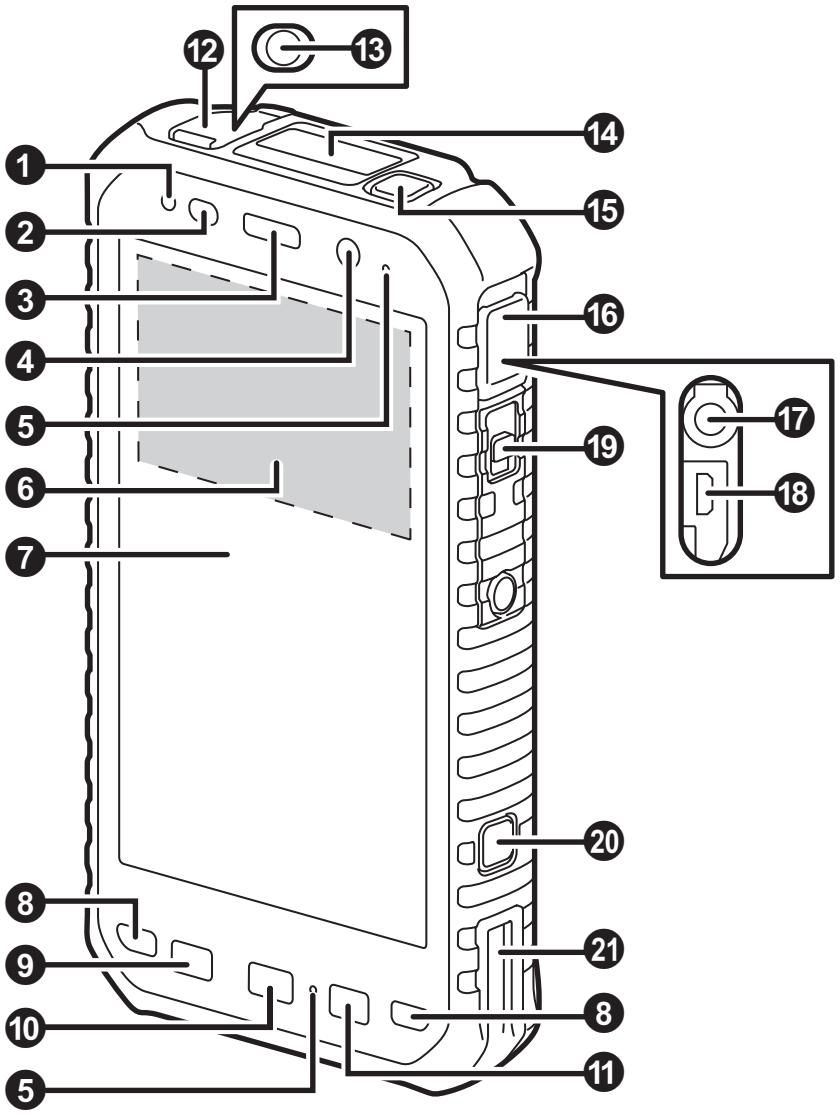

❶ **Indicator**
Orange, lit: Battery is charging
Green, lit: Battery charging is complete
Red, lit: Battery level is 10 % or less of a full charge

❷ **Ambient light sensor, proximity sensor**
The ambient light sensor automatically adjusts the screen brightness. The proximity sensor prevents accidental operations on the touch panel during phone calls.

❸ **Earpiece**

❹ **Front camera**

❺ **Microphone**

❻ **NFC antenna** (internal)
When using an NFC card or other NFC device, touch the card/device to this area of the unit.

❼ **Display**
Can also be operated while using gloves (glove touch mode).

❽ **Speaker**

❾ **Back button**
Press to return to the previous screen.

❿ **Start button**
Press to display the Start screen.

⓫ **Search button**[*1]
Press to search the web.

⓬ **Headset jack cover** (page 33)

⓭ **Headset jack**

⓮ **Barcode reader** (certain models only)

⓯ **Power button** (page 41)

⓰ **Interface cover** (page 34)

⓱ **DC input jack** (page 40)

⓲ **micro USB port** (page 40)

⓳ **Interface cover lock switch**

⓴ **Camera button**
Press and hold to launch the camera app. You can take a picture or record a video.

㉑ **Cradle rail**
Used when connecting the unit to an optional cradle.

*1 The registered function can be changed. See the Reference Manual.

Rear view

The battery cover and battery are omitted in this illustration.

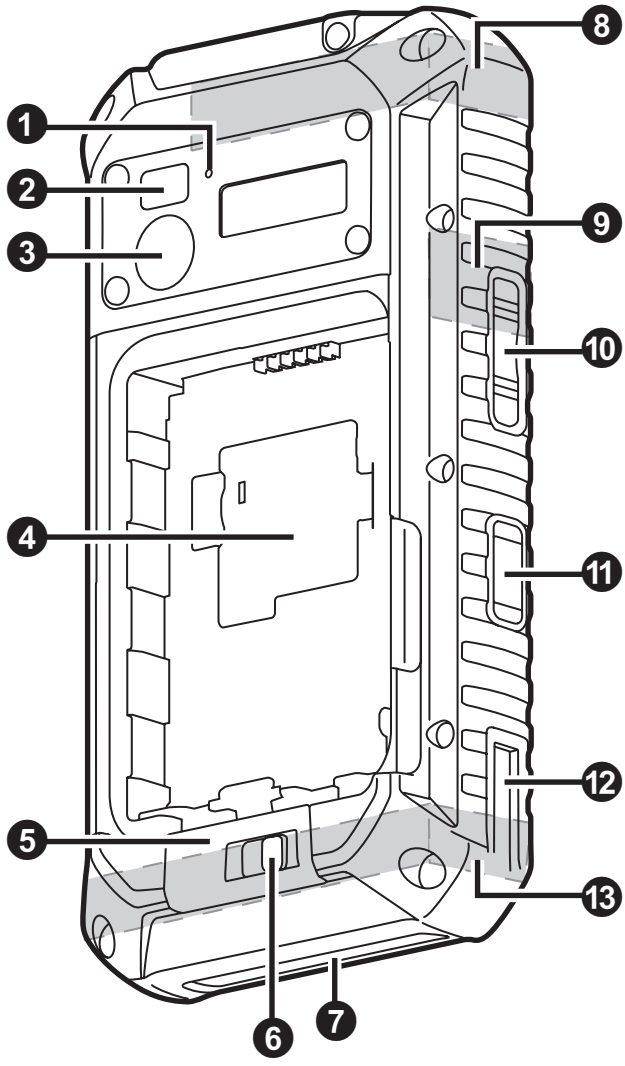

❶ **Microphone**

❷ **Flash**

Can be used when taking pictures. Also lights if you open the battery cover while the unit is turned on.

❸ **Rear camera**

❹ **Card access cover**

❺ **Cover latch**

❻ **Cover latch lock switch**

❼ **Expansion bus connector**

Used when connecting an optional cradle or other future expansion options.

❽ **GPS antenna** (internal)
❾ **Wi-Fi, Bluetooth antenna** (internal)
❿ **Volume buttons**
⓫ **Side button** *1
Used when using the barcode reader (certain models only).
⓬ **Cradle rail**
Used when connecting the unit to an optional cradle.
⓭ **Cellular antenna** (internal)

*1 The registered function can be changed. See the Reference Manual.

Opening and closing the headset jack cover

Pull the top edge of the cover (i.e., the edge closest to the front of the unit) to open the cover. When closing, make sure the cover is closed firmly.

IMPORTANT

- Observe the following to ensure the waterproof and dustproof performance of the unit.
  - Make sure the headset jack cover is securely closed when the headset jack is not being used.
  - When closing the headset jack cover, make sure there is no debris lodged in and around the cover.

Opening and closing the interface cover

Opening the interface cover

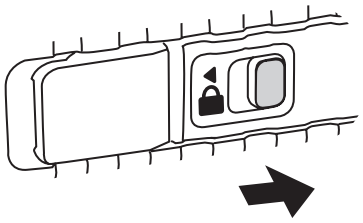

1. Unlock the cover by sliding the switch away from 🔓.

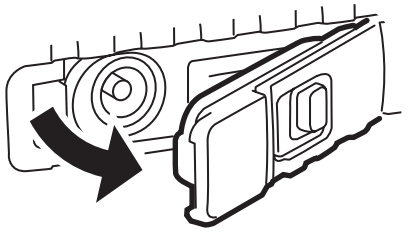

2. Open the cover by pulling the top edge of the cover (i.e., the edge closest to the top of the unit) away from the unit.

Closing the interface cover

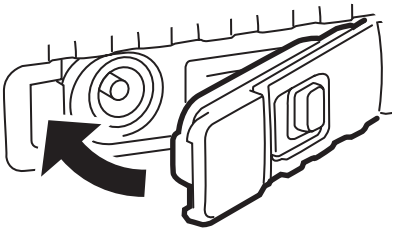

1. Close the cover firmly.

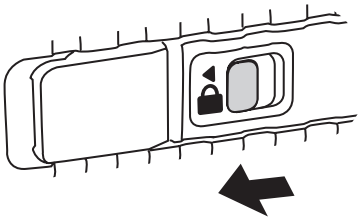

2. Lock the cover by sliding the switch toward 🔒. If the red area inside the switch is visible, the cover is not properly locked.

IMPORTANT

- Observe the following to ensure the waterproof and dustproof performance of the unit.
  - Make sure the interface cover is securely closed and locked when the DC input jack and micro USB port are not being used.
  - When closing the interface cover, make sure there is no debris lodged in the gasket that seals the cover.

Removing the battery cover

1. Unlock the cover latch by sliding the switch (circled in the illustration) away from 🔒 (①), and then open the cover latch by sliding it toward ▼ (②).

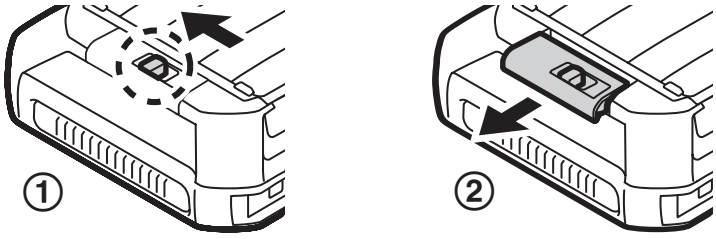

2. While holding the bottom corners of the battery cover (circled in the illustration), lift the battery cover (①) and then remove the cover (②).

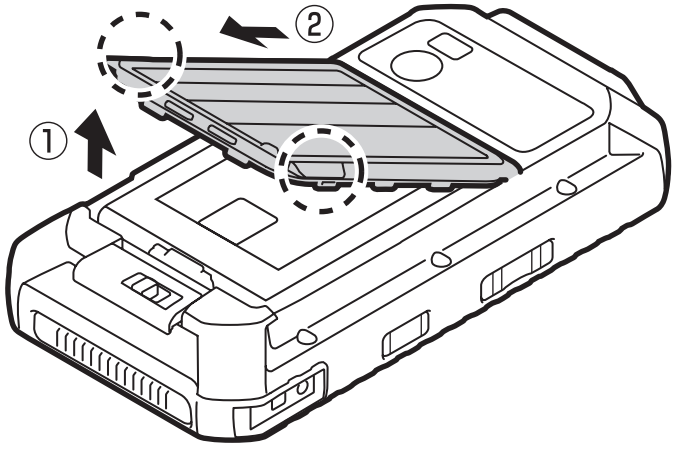

Attaching the battery cover

1. Insert the tabs on the battery cover into the corresponding slots in the battery chamber (①), and then lower the battery cover into place (②).
   - The edge of the battery cover with two tabs (circled in the illustration) should face the bottom of the unit.

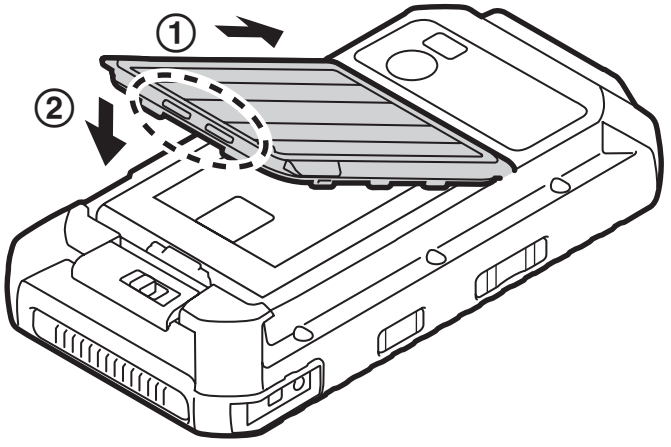

2. Press down firmly on the outside edges of the battery cover to seal it closed.
   - Start in the middle of the cover and work your way down to the bottom, pressing in the areas shown.

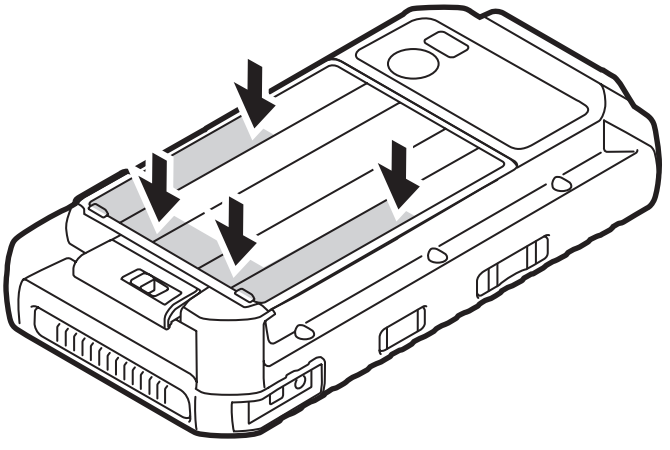

3. Make sure that the battery cover is properly sealed.
   - Two red lines are painted on the inside edges of the battery cover. If the red lines (circled in the illustration) are visible from the side of the unit after the battery cover is closed, the cover is not properly sealed.

   Example: left side of unit

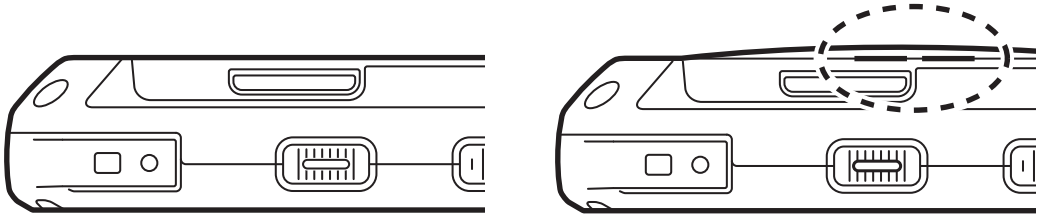

Properly sealed | Not properly sealed

4. Close the cover latch (①) and lock it (②) by sliding the switch (circled in the illustration) toward 🔒.

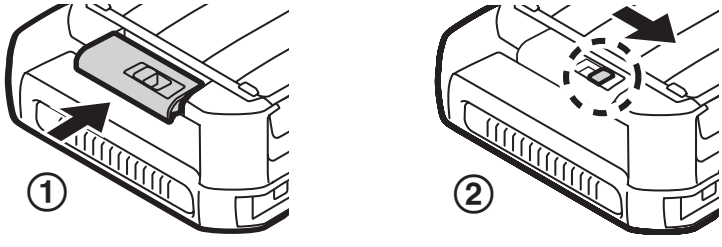

   - If the red area above the latch or inside the switch is visible, the latch is not properly closed or locked.

IMPORTANT

- Observe the following to ensure the waterproof and dustproof performance of the unit.
  - Always make sure the battery cover is securely closed and locked.
  - When closing the battery cover, make sure there is no debris lodged in the gasket that seals the cover.

Installing SIM cards (certain models only)

You can install up to two SIM cards.

1. Remove the battery cover (page 35) and battery if necessary.
   - To remove the battery, lift the battery by pulling on the yellow tab and then remove the battery.
2. Open the card access cover.

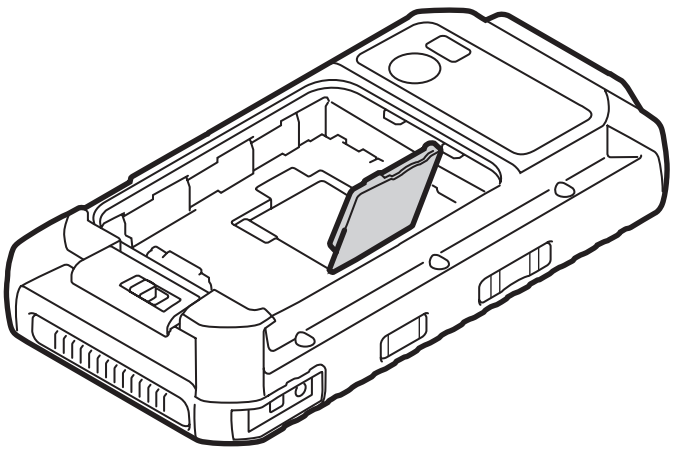

3. Insert the SIM card into the desired micro SIM card slot.
   - Install only micro SIM cards. Do not attempt to install full-size SIM cards.
   - If only one SIM card is installed, insert it into micro SIM card slot 1.
   - Hold the SIM card so that the terminal surface is facing down, with the notch in the position circled here.

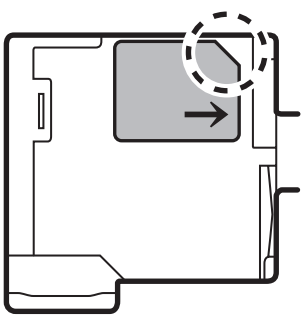

When installing into slot 1

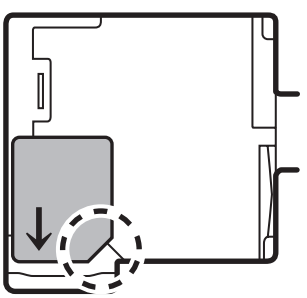

When installing into slot 2

4. Push the SIM card fully into the slot until you hear a click.
   - When removing a SIM card, push it slightly into the unit to eject it.

Note

- See the Reference Manual (flick the Start screen to the left, and then tap **[Online Manual]** in the App list) for information on selecting the active SIM card slot and the preferred mobile network mode.

Installing an SD card

1. Remove the battery cover (page 35) and battery if necessary.
   - To remove the battery, lift the battery by pulling on the yellow tab and then remove the battery.
2. Open the card access cover.
3. Insert the SD card into the SD card slot.
   - Install only microSD cards. Do not attempt to install SD cards of other sizes.
   - Hold the SD card so that the terminal surface is facing down, with the notch in the position circled here.

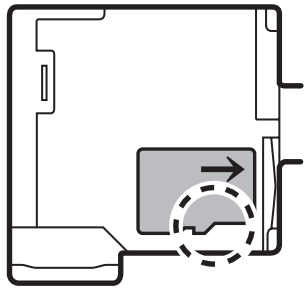

4. Push the SD card fully into the slot until you hear a click.
   - When removing an SD card, push it slightly into the unit to eject it.

Installing the battery

1. Remove the battery cover (page 35) if necessary.
2. Insert the terminal end of the battery into the battery chamber.
   - Insert the battery so that the battery label and the yellow tab are facing up, and that the terminals on the battery line up with the terminals inside the battery chamber.

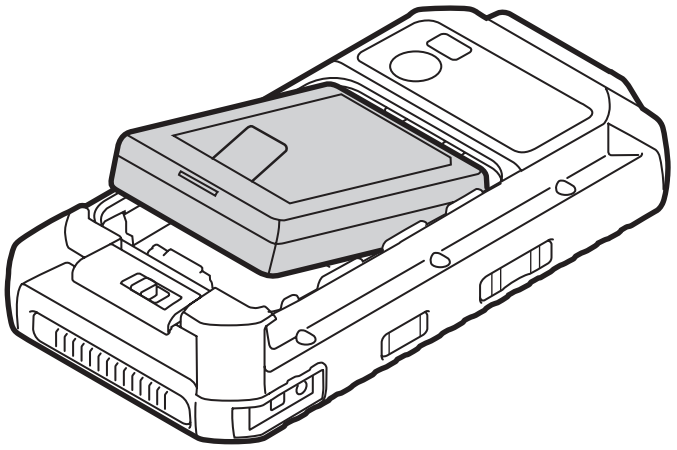

3. Lower the battery into the battery chamber.
   - To remove the battery, lift the battery by pulling on the yellow tab and then remove the battery.

Charging the battery

You can charge the unit by connecting it to a power outlet using an optional AC adaptor (page 58), and also by connecting it to the USB port of a computer or other device using a USB cable.

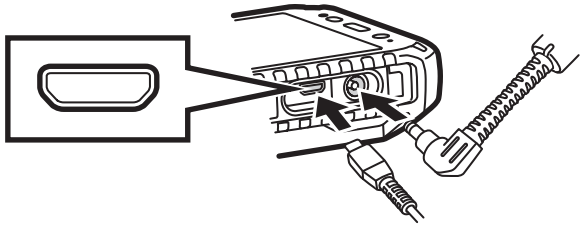

The indicator lights in orange while the battery is charging, and lights in green when charging is complete.

Note

- When connecting a USB cable, note the shape of the micro USB plug and the micro USB port. Do not attempt to connect the USB cable upside down.
- Remove any dust or water droplets from plugs before connecting them. Do not use excessive force when inserting plugs or insert them at an angle.
- If the installed battery fails the unit's battery authentication test, the battery cannot be charged.
- The battery cannot be charged while the unit is turned off. If the unit is off and you begin charging, the unit will start.

Confirming the battery level

The battery level is displayed in the upper-right corner of the screen, in the status bar.

Fully charged

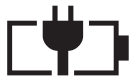
Charging

Very low

You can also confirm the specific amount of battery level remaining. Flick the Start screen to the left, and then in the App list, tap **[Settings]** → **[battery saver]**.

Turning the unit on and off

Turning the unit on

Press and hold ⏻ (power button) on the top of the unit until the unit briefly vibrates.

Note

- We recommend that you fully charge the battery before turning on the unit for the first time or after an extended period of storage.
- If the unit’s temperature is -12 °C (10.4 °F) or less when you try to turn the unit on, the indicator flashes in green and orange and the unit will not turn on. When the unit warms up, the indicator will stop flashing and the unit will turn on automatically.

Turning the unit off

1. Press and hold ⏻ until **[slide down to power off]** is displayed.
2. Tap the screen and slide your finger down.

Turning the screen on and off

- To turn the screen off
  Press ⏻.
- To turn the screen on
  1. Press ⏻ or ⊞ .
     - The lock screen is displayed.
  2. Flick the lock screen upwards.

Configuring the unit for the first time

The first time you turn the unit on, you will be prompted to configure different settings. Follow the on-screen instructions and configure each item as needed. An Internet connection is required to configure certain items.

- If you cannot select **[next]** on the handheld setting screen, select **[More Options]** → **[Consumer setup]** → **[OK]** to restart the unit and proceed to the next setting screen.

Screen display

Using the Start screen and the App list

The Start screen is the starting point for all operations. The Start screen already has a number of tiles displayed on it, but the tiles displayed and their locations can be changed as necessary. Press ⊞ (start button) to return to the Start screen at any time. Flick the Start screen to the left to switch to the App list, where all of the applications on the device are displayed in a list.

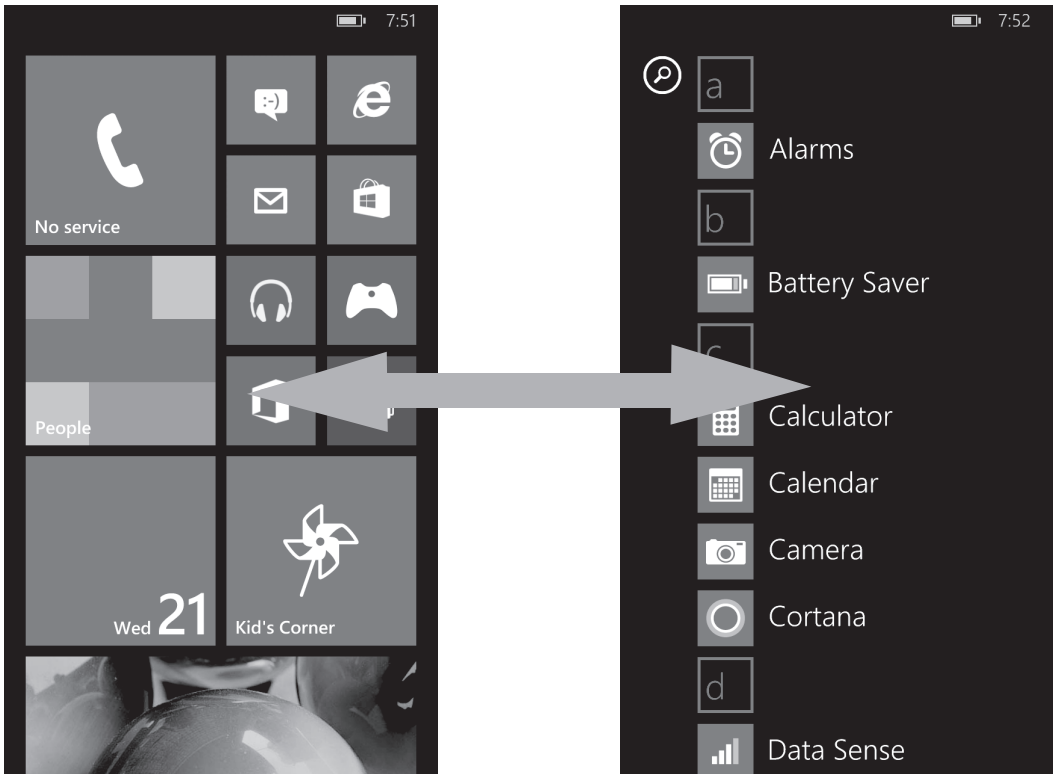

Start screen App list

- Tap any letter on the App list to jump to that letter's section.

Using the status bar

The status icons displayed on the status bar at the top of the screen indicate the current status of the device.

- See the Reference Manual for an explanation of the icons.

Using the action center

Detailed information about incoming calls, text messages, and app update information is displayed in the action center. The action center is displayed by flicking downward from the top of the screen and is hidden by flicking up from the bottom of the screen.
While the action center is displayed, you can tap a notification to open the corresponding app or change the on/off settings for

displayed apps. Tap **[ALL SETTINGS]** to switch to the **[Settings]** app.

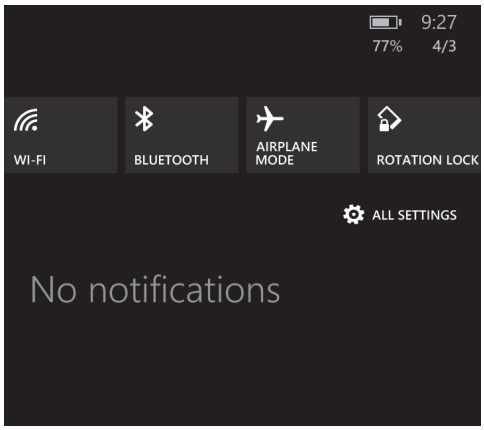

Basic operations

Adjusting the volume

1. Press [+] or [-] of the Volume button.
   - The volume bar is displayed at the top of the screen. (It disappears after several seconds.)

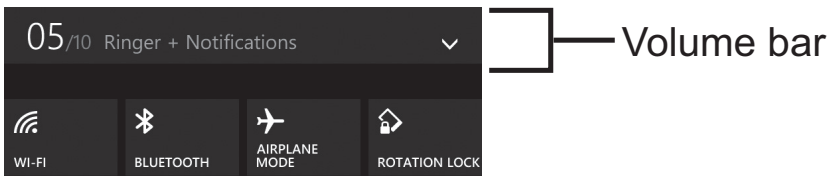

2. Press [+] or [-] to set the volume at an appropriate level.
   - The volume level is displayed on the left side of the volume bar.

Using the volume adjustment panel

Tap the [v] on the right edge of the volume bar to display the volume adjustment panel. (It will disappear after several seconds.) While the volume adjustment panel is displayed, you can adjust the volume or turn the vibration on or off.

Using the app bar

Depending on the application, the app bar is displayed at the bottom of the display during operation and you can tap the icons to perform operations. Tap ••• on the right side of the screen or flick up from

the app bar to display explanations for each icon, the operation menu, and so on.

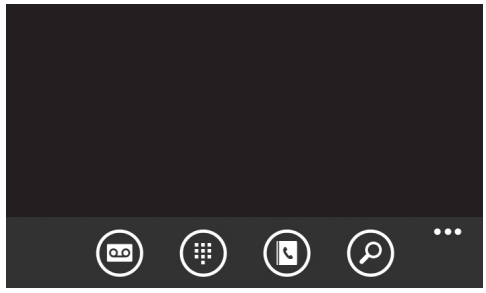

Using the context menu

Some items have context menus. The context menu is similar to the right click menu on a computer. Context menus can be opened by tapping and holding an item. To close the menu, tap any place outside of the menu.

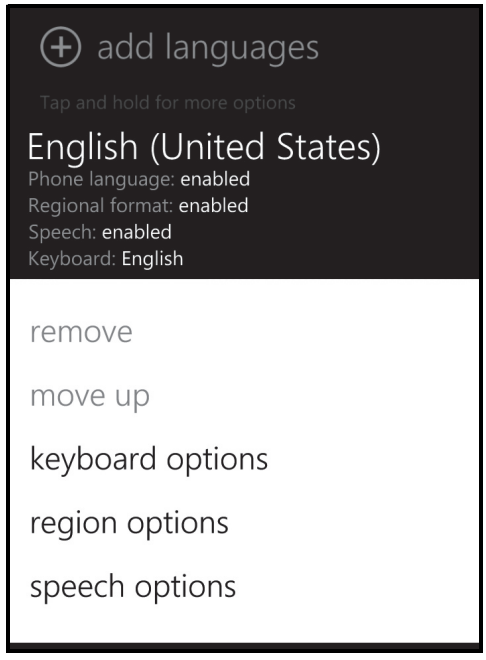

Displaying the App switcher

When multiple apps are active, press and hold ← (back button) to display the App switcher. Flick between the screens and tap one to switch to that screen.

To close the screen, press ← (back button).

Troubleshooting

If you experience any trouble while using the unit, refer to the information in this section for troubleshooting. See the Reference Manual (flick the Start screen to the left, and then tap **[Online Manual]** in the App list) for additional troubleshooting information.

Starting up

The unit does not turn on.

- To turn the unit on, press and hold ⏻ (power button) until the unit briefly vibrates.
- The battery may have become completely discharged. Charge the battery.
- The unit may be too hot. Leave the unit in an environment of 10 °C to 35 °C (50 °F to 95 °F) for about an hour, and then try again.
- The unit may be too cold. Leave the unit in an environment of 10 °C to 35 °C (50 °F to 95 °F) for about an hour, and then try again. After turning on the unit, you can enable the heater so that it will turn on automatically if the unit becomes too cold. See “Enabling the internal heater” (page 51).

The unit does not wake up from sleep.

- The battery may have become completely discharged while the unit was in sleep mode. In this case, any data which has not been saved will be lost, and the unit will not wake up. Charge the battery.
- The unit may be too hot. Leave the unit in an environment of 10 °C to 35 °C (50 °F to 95 °F) for about an hour, and then try again.
- The unit may be too cold. Leave the unit in an environment of 10 °C to 35 °C (50 °F to 95 °F) for about an hour, and then try again. After turning on the unit, you can enable the heater so that it will turn on automatically if the unit becomes too cold. See “Enabling the internal heater” (page 51).

Nothing appears on the screen.

- The screen may have turned off to save power. Press ⏻ (power button) or ⊞ (start button).
- Charge the battery.
- Install the battery correctly.
- Replace the battery with a fully-charged one.
- The screen is too dark. See “The screen is too dark.” (page 48).

Other startup problems

- Disconnect and remove all peripheral devices.

Shutting down

The unit does not turn off.

- It may take one or two minutes for the unit to turn off. This is not a malfunction.
- Press and hold ⏻ (power button) and [-] of the Volume button for at least 10 seconds to restart the unit, and then try again.
- Disconnect and remove all peripheral devices.

Screen

There are red, green, or blue dots on the screen, or there is unevenness in screen colors or brightness.

- The following are not malfunctions.
  - Although advanced high-precision technologies are used in the production of color LCD screens, a very small number of the screen pixels may be dark or remain constantly lit.
  - Due to the natural characteristics of LCD screens, you may notice unevenness in colors and brightness depending on your angle of view. Hues may also vary by product.

The screen is too dark.

- The **[Automatically adjust]** setting reduced the brightness according to the ambient brightness. Manually adjust the screen brightness.
  1. Flick the Start screen to the left, and then in the App list, tap **[Settings]** → **[brightness]**.
  2. Turn off the **[Automatically adjust]** switch.
  3. Tap **[Level]** and select the desired brightness level.
- The **[Minimum limit brightness]** setting was turned on. Turn the setting off.
  1. Flick the Start screen to the left, and then in the App list, tap **[Settings]** → **[other settings]**.
  2. Turn off the **[Minimum limit brightness]** switch.

Indicator

The indicator flashes in green and orange.

- The battery cannot be charged temporarily because the ambient temperature is too low or too high. Leave the unit in an environment of 10 °C to 35 °C (50 °F to 95 °F) for about an hour.
- The unit cannot turn on because the unit's temperature is -12 °C (10.4 °F) or less. While the indicator flashes in green and orange, the heater will try to heat the unit if it is enabled. Once the unit warms up, the indicator will stop flashing and the unit will turn on automatically.

The indicator lights in red.

- The remaining battery level is approximately 10 % or less of a full charge. Charge the battery.

The indicator flashes in red.

- Battery authentication failed. Use a battery specified on page 58.
- There may be debris lodged in the battery charge terminals. Remove the battery and remove any debris found.

The indicator does not light during charging.
Battery charging ends quickly, or the battery cannot be charged at all.

- The AC adaptor cable or USB cable is not connected properly. Confirm all connections, remove the AC adaptor cable or USB cable, and then insert it again. Make sure the AC adaptor plug or micro USB plug is inserted fully into the unit.
- There may be debris lodged in the battery charge terminals. Remove the battery and remove any debris found.
- Replace the battery with a new one.

Other

The date and time are incorrect.

- Confirm the date and time settings. Flick the Start screen to the left, and then in the App list, tap **[Settings]** → **[date+time]**.
- Set the date and time automatically (for models supporting cellular transmission).
  1. Flick the Start screen to the left, and then in the App list, tap **[Settings]** → **[date+time]**.
  2. Turn on the **[Set automatically]** switch.
  3. Make sure the unit is in an area with good wireless reception, turn the unit off, and then turn it on again.

The unit's operation is slow.

- Ambient temperature may be too low or too high. Leave the unit in an environment of 10 °C to 35 °C (50 °F to 95 °F) for about an hour and then try again.

The unit does not respond.

- Turn the unit off and then on again (page 41).
- If an app does not work normally, follow the instructions below to force quitting the problematic app.
  1. Press and hold ← (back button) to display the App switcher, and then flick between the screens to select the desired app.
  2. Flick the desired app downwards to force quit.

The screen freezes and no operations can be performed.

- Press and hold ⏻ (power button) and [-] of the Volume button for at least 10 seconds to restart the unit, and then try again.

Appendix

Replacing the battery

Place the unit on a flat, stable surface such as a table when replacing the battery.

1. Turn off the unit (page 42).
2. Remove the battery cover (page 35).
3. Lift the battery by pulling on the yellow tab, and then remove the battery.
4. Install the replacement battery (page 40).
5. Attach the battery cover (page 36).

Hot swapping the battery

The unit supports “hot swap” battery replacement, which allows you to replace the unit's battery without turning the unit off.

- Be sure to finish the battery replacement in 30 seconds. Otherwise, the unit may turn off. In this case, any data which has not been saved will be lost.

Enabling the internal heater

If enabled, the unit’s internal heater will activate in order to warm the product when its temperature is -12 °C (10.4 °F) or colder.

1. Flick the Start screen to the left, and then in the App list, tap **[Settings]** → **[other settings]**.
2. Set the **[Heater]** switch to **[Auto]** or **[Off]**.

Factory data reset

CAUTION

- The following procedure resets all settings and erases any data you have stored in the unit. Back up important data before performing this procedure.

1. Flick the Start screen to the left, and then in the App list, tap **[Settings]** → **[about]**.
2. Tap **[reset your phone]** → **[Yes]**.
   - The unit restarts when the factory data reset is complete.

Specifications

Typical unit specifications and certain options are described below. Unit configuration may vary.

Model No.	FZ-E1
CPU	Qualcomm® MSM8974AB 2.3 GHz quad-core CPU
Memory	2 GB*1
Storage	32 GB
Display	**Internal LCD** 5-inch, 1280×720 pixels (HD), 16:9 aspect ratio, 16,777,216 colors

Wi-Fi	IEEE802.11 a/b/g/n/ac Qualcomm® WCN3680 **Data transfer rate** IEEE 802.11a: up to 54 Mbps IEEE 802.11b: up to 11 Mbps IEEE 802.11g: up to 54 Mbps IEEE 802.11n: • HT20: up to 72.2 Mbps • HT40: up to 150 Mbps IEEE 802.11ac: • VHT20: up to 86.6 Mbps • VHT40: up to 200 Mbps • VHT80: up to 433 Mbps **Standards supported** IEEE 802.11a / IEEE 802.11b / IEEE 802.11g / IEEE 802.11n / IEEE 802.11ac **Transmission method** OFDM system, DSSS system **Wireless channels used** IEEE 802.11a / IEEE 802.11n (5 GHz) / IEEE 802.11ac • W52 (36, 38, 40, 42, 44, 46, 48 ch) • W53 (52, 54, 56, 58, 60, 62, 64 ch) • W56 (100, 102, 104, 106, 108, 110, 112, 116, 118, 120, 122, 124, 126, 128, 132, 134, 136, 140 ch) • W58 (149, 151, 153, 155, 157, 159, 161, 165 ch) IEEE 802.11b / IEEE 802.11g / IEEE 802.11n (2.4 GHz): 1 ch - 11 ch **RF frequency band** 2.4 GHz Band: 2412 MHz - 2462 MHz 5 GHz Band: 5180 MHz - 5320 MHz, 5500 MHz - 5700 MHz, 5745 MHz - 5825 MHz

Bluetooth	Version 4.0, Class 1 **Transmission method** FHSS system **Wireless channels used** 1 - 79 ch (Low energy: 0 - 39 ch) **RF frequency band** 2400-2483.5 MHz (including guard bands)
Mobile networking (certain models only)	LTE, HSPA+, UMTS, EDGE, GPRS, CDMA 1x, EVDO Rev.A **SIM card slot** micro SIM card slot ×2
Sound	**Speaker** Loud volume speaker (mono) ×2 **Microphone** Internal microphone ×3
Security technology	ARM® TrustZone® (built-in)
Camera	**Front** 1.3 megapixels Video: 1280×720 pixels, 30 fps Still: 1280×960 pixels **Rear** 8 megapixels Video: 1280×720 pixels, 30 fps Still: 3264×2448 pixels
GPS	GPS 2 m CEP50 (±2 m to 4 m), GLONASS
Barcode reader (certain models only)	1D, 2D compatible
Enhanced data security	FIPS 140-2 level-1 compliant

Sensors	Ambient light sensor, digital compass, gyro sensor, acceleration sensor
NFC	Type A, B, Felica compatible
Card slots	**SD memory card** micro SDXC card slot ×1[*2] **Magnetic stripe reader** (optional) Via gadget interface
Interfaces	USB 2.0 port ×1[*3], gadget interface, headset ×1, cradle interface ×1
Touchscreen	10-point capacitive touchscreen with glove touch mode and rain sensing touch mode[*4]
Power supply	Battery
AC adaptor (optional)	CF-AA6373A (60 W)[*5]
Battery	Li-ion 3.8 V, 6200 mAh **Operating time** (approx.)[*6] Standby: 1000 hours Talk: 23 hours[*7] Barcode scanning[*8]: 20.5 hours **Charging time** (approx.)[*9] 3.6 hours
Power consumption[*10]	Approx. 18 W[*11]
Battery hot swap	Yes
Dimensions (W × D × H)	87.4 mm × 165 mm × 30.9 mm (3.4 in. × 6.5 in. × 1.2 in.) without protrusions
Weight[*12]	Approx. 426 g (0.94 lb)[*13], including battery

Operating environment*14	**Temperature** -20 °C to 60 °C (-4 °F to 140 °F) **Humidity** 30 % to 80 % RH
Storage environment	**Temperature** -30 °C to 70 °C (-22 °F to 158 °F) **Humidity** 30 % to 90 % RH
Operating system*15	Windows Embedded 8.1 Handheld
Water and dust resistance	IP65, IP68

Specifications are subject to change without notice.

*1 1 MB = 1,048,576 bytes, 1 GB = 1,073,741,824 bytes

*2 Operation has been tested and confirmed using the following Panasonic brand memory cards: SD (up to 2 GB), SDHC (up to 32 GB), SDXC (up to 64 GB). Compatibility with other SD devices is not guaranteed.

*3 Does not guarantee operation of all USB-compatible peripherals.

*4 Single-point operation when rain sensing touch mode is enabled.

*5 The AC adaptor is designed for use with power sources that supply up to 240 V AC. The AC cord supplied with the AC adaptor is designed for use with power sources that supply up to 125 V AC.

*6 Actual performance varies depending on usage conditions, connected peripherals, etc. Typically, operating time is reduced in colder environments.

*7 Talk time may vary depending on the condition of the mobile network.

*8 As defined by the JEITA Specification, Working Mode B.

*9 Varies depending on usage conditions.

*10 When the battery is fully charged (or not being charged) and the unit is off.

*11 Rated power consumption

*12 Average weight. Actual weight may vary by unit configuration.

*13 For models without an optional barcode reader. Weight for models with an optional barcode reader is 435 g (0.96 lb).

*14 Do not expose the skin to this product when using the product in a hot or cold environment.
When using the product in hot or cold environments, some peripherals may not perform properly. Confirm the recommended operation environment of the peripherals.
Using the product continuously in hot environments will shorten the product life. Avoid continuous use in these types of environments.
When using the product in cold environments, the product may take longer to start up and battery operation time may be reduced.
Even when using the product within the temperature and humidity ranges listed here, using the product continuously in extreme environments will result in product deterioration and will shorten the life of the product.

*15 Product functionality cannot be guaranteed if the operating system is modified or replaced by the user or a third party.

Accessories

Product name	Model number
AC Adaptor	CF-AA6373A
Car Adaptor	CF-AAV1601AW
Battery Pack	FZ-VZSUX100J
Cradle	FZ-VEBX111U
Holster	FZ-VSTX111U

Limited warranty

Limited warranty for U.S.A.

Panasonic System Communications Company
of North America (PSCNA)
Computer Products - Worldwide Warranties

Section 1: Limited Warranty - Hardware

PSCNA, referred hereafter as “Panasonic” will repair the products listed below with new or refurbished parts, free of charge in the Global Panasonic approved location for the period specified below from the date of original purchase in the event of a defect in materials or workmanship.
These warranties are extended solely to the original purchaser. A purchase receipt or other proof of date of original purchase will be required before warranty performance is rendered.

Laptop Computers (CF-##):	3 Years
Tablet PC (FZ-A#/FZ-E#/FZ-G#/FZ-X#/JT-B#):	3 Years
Ultra-Mobile PC (CF-U#/CF-H# Series):	3 Years
PDRC - LCD & Keyboard Assembly:	3 Years

Original Battery Warranty

Batteries supplied with the product are covered under the warranty for one (1) year from date of purchase, except as excluded in Section 3. Batteries purchased separately are covered under the warranty for one (1) year from the date of purchase. A replacement battery furnished under the product warranty is covered for the remaining period of the one year warranty of the original or purchased battery.

Optional: Battery Extended Warranty Program

If this coverage is purchased, the serial numbered unit is entitled to one replacement battery within each 12 month period, providing the existing battery holds less than 50 % of the original battery life. For Laptop PCs, FZ-E#, FZ-G#, FZ-X#, and JT-B# models, a replacement battery will be shipped out in advance for exchange. For FZ-A# models, the unit must be sent in for expedited battery replacement by calling the number at the end of the last page of this document. The cost of labor, the battery, and shipping are included in the price of the Battery Extended Warranty Program.

Optional: Extended Warranty Program (PC)

If this coverage is purchased, the serial numbered unit is entitled to the same warranty coverage as the original warranty, for a period determined at the time of the extended warranty purchase. In this case the battery is not included in the extended warranty coverage; a separate coverage program is available for the battery. The cost of labor, parts, and shipping are included in the price of the Extended Warranty Program.

Optional: Panasonic “Protection Plus” Warranty

Any unit for which the Panasonic “Protection Plus” warranty has been purchased will receive additional coverage for any failure that occurs due to accidental damage. All other terms and conditions of the standard warranty apply and this additional coverage will exist for the duration of the standard warranty period of the unit.
If an extended Protection Plus warranty program is purchased, coverage is extended to the end of the last year of extended coverage purchased.
This warranty does not cover failures or defects that are caused by fire, intentional acts, loss, theft, improper maintenance, modification or service by anyone other than the Panasonic National Service Center or a Panasonic Authorized Service Provider, or damage that is attributable to acts of God.
Cosmetic damage that does not affect functionality is not covered. Cosmetic damage on units with hardware failures will be repaired in accordance with the warranty terms.
This warranty is extended solely to the original purchaser on the unit serial number for which it was purchased.
Complete unit replacement fulfills the full obligation and is at the discretion of Panasonic and is limited to once during the coverage term.
Refer to the Panasonic web site for full terms and conditions on the above programs.

Options and Accessories Warranties

The below listed Panasonic brand or supplied options and accessories are covered under this limited warranty for the period specified from the date of purchase or as specifically stated.

- AC Adaptor and Power Cord: 3 Years
- Car Adaptor and Power Cord: 3 Years
- Cradle: 3 Years
- Optional Battery: 1 Year
- Integrated Panasonic supplied options and kits including, but not limited to, Cameras, GPS devices, Bluetooth devices, Smartcard Readers, Magnetic Card Readers, Barcode Scanners, and Fingerprint Readers: 3 years or the warranty

period of the unit in which it is installed provided the installation was performed by Panasonic or an Authorized Integrator.

Section 2: Limited Warranty - Software

Panasonic warrants to you only that the disk(s) or other media on which the Programs are furnished will be free from defects in material and workmanship under normal use for a period of sixty (60) days from the date of delivery thereof to you, as evidenced by your purchase receipt.
This is the only warranty Panasonic makes to you.
Panasonic does not warrant that the functions contained in the Programs will meet your requirements or that the operation of the Programs will be uninterrupted or error free.
Panasonic shall have no obligation for any defects in the disk(s) or other media on which the Programs are furnished resulting from your storage thereof, or for defects that have been caused by operation of the disk(s) or other media.
Panasonic's entire liability and your exclusive remedy under this warranty shall be limited to the replacement, in the United States or other Panasonic designated location, of any defective disk or other media which is returned to Panasonic's Authorized Service Center, together with a copy of the purchase receipt, within the aforesaid warranty period.

Section 3: Limited Warranty Exclusions - Specifically excluded from the warranty are:

- All consumable items; such as screen protection films, logo badges, labels, cleaning cloths, carry cases, manuals, cables, straps, belts, holsters, tethers, and harnesses and any other options and accessories not listed above or covered under a separate warranty
- Failures related to the product operating system, hard drive or solid state drive image, software setup, software program, virus, other program(s) or file(s) on any drive or in any computer memory location
- Failures due to BIOS settings or changes, as well as any cosmetic or physical damage to the unit
- Any unit or device with a missing or altered model number or serial number label
- Cosmetic damage or any damage which occurs in shipment
- Failures which are caused by products not supplied by Panasonic
- Failures which result from alteration, accident, misuse, introduction of liquid or other foreign matter into the unit, abuse, neglect, installation, maladjustment of consumer

controls, improper maintenance or modification, use not in accordance with product use instructions

- Failures due to service by anyone other than a Panasonic Authorized Service Provider
- Failures caused by improper installation of options or accessories or due to installation by any company other than Panasonic or a Panasonic Authorized Integrator
- Damage, failure, or loss due to the unit being stolen, lost, misplaced, or used by anyone other than the original purchaser
- Damage that is attributable to acts of God

This limited warranty only covers failures due to defects in materials or workmanship which occur during normal use. If a unit is sent to a Panasonic Authorized Service Center and no hardware failure is found, the customer will be billed for labor to correct a software issue or reimage the hard drive plus shipping and applicable administrative fees at the current rates set by the service provider.
THIS PRODUCT IS NOT INTENDED FOR USE AS OR PART OF NUCLEAR EQUIPMENT/SYSTEMS, AIR TRAFFIC CONTROL EQUIPMENT/SYSTEMS, OR AIRCRAFT COCKPIT EQUIPMENT/SYSTEMS*1. PANASONIC WILL NOT BE RESPONSIBLE FOR ANY LIABILITY RESULTING FROM THE USE OF THIS PRODUCT ARISING OUT OF THE FOREGOING USES.
*1 AIRCRAFT COCKPIT EQUIPMENT/SYSTEMS include class 2 Electronic Flight Bag (EFB) Systems and Class 1 EFB Systems when used during critical phases of flight (e.g., during take-off and landing) and/or mounted onto the aircraft. Class 1 EFB Systems and 2 EFB Systems are defined by FAA: AC (Advisory Circular) 120-76A or JAA: JAA TGL (Temporary Guidance Leaflets) No. 36.

Other Limits and Exclusions: There are no other express warranties except as listed above.

PANASONIC SHALL NOT BE LIABLE FOR LOSS OF DATA OR OTHER INCIDENTAL OR CONSEQUENTIAL DAMAGES RESULTING FROM THE USE OF THIS PRODUCT, OR ARISING OUT OF ANY BREACH OF THIS WARRANTY. ALL EXPRESS AND IMPLIED WARRANTIES, INCLUDING THE WARRANTIES OF MERCHANTABILITY AND FITNESS FOR A PARTICULAR PURPOSE ARE LIMITED TO THE APPLICABLE WARRANTY PERIOD SET FORTH ABOVE. Some states do

not allow the exclusion or limitation of incidental or consequential damages, or limitations on how long an implied warranty lasts, so the above limitations or exclusions may not apply to you.

This limited warranty gives you specific legal rights, and you may also have other rights which vary from state to state.

For technical support or to arrange for service on your Panasonic computer product, call our toll-free hotline at 1-855-PSC-TECH (1-855-772-8324).

Web site: www.panasonic.com/toughbook

For hearing or speech impaired TTY users, call 1-877-833-8855 using a TTY device.

Panasonic System Communications Company of North America
Two Riverfront Plaza, Newark, NJ 07102, USA

© Panasonic System Networks Co., Ltd. 2014

PGQX1603ZAJ1

PGQX1603ZAJ1
C0714-0074
Printed in Japan