ONE WORLD ○ OUR APPROVAL

Test report

340659-2TRFWL

Date of issue: May 1, 2018

Applicant:

ARRIS Technology, Inc.

Product:

IP815

Model:

IP815

FCC ID:

ACQ-IP815W

IC Registration Number:

109AS-IP815W

Specifications:

- FCC 47 CFR Part 15 Subpart E, §15.407(h)

  Unlicensed National Information Infrastructure Devices

  (2) Dynamic Frequency Selection (DFS)

Test location

Company name	Nemko Canada Inc.
Address	303 River Road
City	Ottawa
Province	Ontario
Postal code	K1V 1H2
Country	Canada
Telephone	+1 613 737 9680
Facsimile	+1 613 737 9691
Toll free	+1 800 563 6336
Website	www.nemko.com
Site number	FCC: CA2040; IC: 2040A-4 (3 m SAC)

Tested by	Kevin Rose, Wireless/EMC Specialist
Reviewed by	Andrey Adelberg, Senior Wireless/EMC Specialist
Date	May 1, 2018
Signature of the reviewer	

Limits of responsibility

Note that the results contained in this report relate only to the items tested and were obtained in the period between the date of initial receipt of samples and the date of issue of the report.
This test report has been completed in accordance with the requirements of ISO/IEC 17025. All results contain in this report are within Nemko Canada's ISO/IEC 17025 accreditation.

Copyright notification

Nemko Canada Inc. authorizes the applicant to reproduce this report provided it is reproduced in its entirety and for use by the company's employees only. Any use which a third party makes of this report, or any reliance on or decisions to be made based on it, are the responsibility of such third parties. Nemko Canada Inc. accepts no responsibility for damages, if any, suffered by any third party as a result of decisions made or actions based on this report.
© Nemko Canada Inc.

Table of contents

Table of contents **3**
Section 1. Report summary **4**
1.1 Applicant and manufacturer 4
1.2 Test specifications 4
1.3 Test methods 4
1.4 Statement of compliance 4
1.5 Exclusions 4
1.6 Test report revision history 4
Section 2. Summary of test results **5**
2.1 FCC §15.407(h)(2), test results 5
Section 3. Equipment under test (EUT) details **6**
3.1 Sample information 6
3.2 EUT information 6
3.3 Technical information 6
3.4 Product description and theory of operation 6
3.5 EUT exercise details 6
Section 4. Engineering considerations **7**
4.1 Modifications incorporated in the EUT 7
4.2 Technical judgment 7
4.3 Deviations from laboratory tests procedures 7
Section 5. Test conditions **8**
5.1 Atmospheric conditions 8
5.2 Power supply range 8
5.3 Uncertainty of measurement 8
Section 6. Test equipment **9**
6.1 Test equipment list 9
Section 7. Test rules and requirements **10**
7.1 FCC 15.407(h)(2) Radar Detection Function of Dynamic Frequency Selection (DFS) 10
Section 8. Testing data **12**
8.1 Channel closing transmission and move time 12
8.2 Non-occupancy period 14
Section 9. Block diagrams of test set-ups **15**
9.1 Test set-up diagram 15

Section 1. Report summary

1.1 Applicant and manufacturer

Company name	ARRIS Technology, Inc.
Address	6450 Sequence Dr.
City	San Diego,
Province/State	CA
Postal/Zip code	92121
Country	USA

1.2 Test specifications

FCC 47 CFR Part 15, Subpart E, Clause 15.407	Unlicensed National Information Infrastructure Devices

1.3 Test methods

789033 D02 General UNII Test Procedures New Rules v01	Guidelines for Compliance Testing of Unlicensed National Information Infrastructure (U-NII) Devices Part 15, Subpart E
905462 D02 Client Without DFS New Rules v01r02	U-NII client devices without radar detection capability
905462 D02 UNII DFS Compliance Procedures New Rules v02	Compliance measurement procedures for unlicensed – national information infrastructure devices operating in the 5250–5350 MHz and 5470–5725 MHz bands incorporating dynamic frequency selection

1.4 Statement of compliance

In the configuration tested, the EUT was found compliant.

Testing was completed against all relevant requirements of the test standard. Results obtained indicate that the product under test complies in full with the requirements tested. The test results relate only to the items tested.

See “Summary of test results” for full details.

1.5 Exclusions

This report covers 5250–5350 MHz Band.

1.6 Test report revision history

Revision #	Details of changes made to test report
TRF	Original report issued

Section 2. Summary of test results

2.1 FCC §15.407(h)(2), test results

KDB Section	Test description	Verdict
5.2	DFS detection threshold	Not applicable [1]
7.8.1	U-NII detection bandwidth	Not applicable [1]
7.8.2.1	Initial Channel Availability Check (CAC) time	Not applicable [1]
7.8.2.2	In-service monitoring, radar burst at the beginning of the CAC	Not applicable [1]
7.8.2.3	In-service monitoring, radar burst at the end of the CAC	Not applicable [1]
7.8.3	Channel move time	Pass
7.8.3	Channel closing transmission time	Pass
7.8.3	Non-occupancy period	Pass
7.8.4.1	Statistical performance with short pulse radar test	Not applicable [1]
7.8.4.2	Statistical performance with long pulse radar test	Not applicable [1]
7.8.4.3	Statistical performance with frequency hopping radar test	Not applicable [1]

Note: [1] The EUT is a Client without radar detection Not applicable [1]

Section 3. Equipment under test (EUT) details

3.1 Sample information

Receipt date	November 20, 2017
Nemko sample ID number	1

3.2 EUT information

Product name	IP815
Model	IP815
Serial number	M11632TJC063

3.3 Technical information

Operating band	5250–5350 MHz
Operating frequencies	5250–5350 MHz
Modulation type	802.11n/ac
Channel bandwidth	80 MHz
Power requirements	120 V_{AC} 60 Hz
Antenna information	The EUT uses a unique antenna coupling/ non-detachable antenna to the intentional radiator.

3.4 Product description and theory of operation

Extend the power of the ARRIS Whole Home Solution to any room in your house with the ARRIS IP815 Media Player. The IP815 is enabled with MoCA 2.0 and 802.11ac Wi-Fi home networking to receive live, recorded, OTT, and Video-On-Demand content from the DCX3635 Media Gateway. The Whole Home Solution enables a full DVR experience in every room equipped with an IP815, including a Live Time-Shift Buffer. With an IP815 connected to the home network, end users can browse the DVR recordings stored on the media gateway, watch the recorded content, or schedule future recordings.

3.5 EUT exercise details

Link to a master

Section 4. Engineering considerations

4.1 Modifications incorporated in the EUT

There were no modifications performed to the EUT during this assessment.

4.2 Technical judgment

None

4.3 Deviations from laboratory tests procedures

No deviations were made from laboratory procedures.

Section 5. Test conditions

5.1 Atmospheric conditions

Temperature	15–30 °C
Relative humidity	20–75 %
Air pressure	860–1060 mbar

When it is impracticable to carry out tests under these conditions, a note to this effect stating the ambient temperature and relative humidity during the tests shall be recorded and stated.

5.2 Power supply range

The normal test voltage for equipment to be connected to the mains shall be the nominal mains voltage. For the purpose of the present document, the nominal voltage shall be the declared voltage, or any of the declared voltages ±5 %, for which the equipment was designed.

5.3 Uncertainty of measurement

Nemko Canada Inc. has calculated measurement uncertainty and is documented in EMC/MUC/001 “Uncertainty in EMC measurements.” Measurement uncertainty was calculated using the methods described in CISPR 16-4 Specification for radio disturbance and immunity measuring apparatus and methods – Part 4: Uncertainty in EMC measurements; as well as described in UKAS LAB34: The expression of Uncertainty in EMC Testing. Measurement uncertainty calculations assume a coverage factor of K=2 with 95% certainty.

Section 6. Test equipment

6.1 Test equipment list

Table 6.1-1: *Equipment list*

Equipment	Manufacturer	Model no.	Asset no.	Cal cycle	Next cal.
DFS test box	Aeroflex	PXI	FA002628	1 year	Aug 26/18
Spectrum analyzer	Rohde & Schwarz	FSU	FA001877	1 year	July 18/18

Section 7. Test rules and requirements

7.1 FCC 15.407(h)(2) Radar Detection Function of Dynamic Frequency Selection (DFS)

(2) Radar Detection Function of Dynamic Frequency Selection (DFS). U-NII devices operating with any part of its 26 dB emission bandwidth in the 5.25–5.35 GHz and 5.47–5.725 GHz bands shall employ a DFS radar detection mechanism to detect the presence of radar systems and to avoid co-channel operation with radar systems. Operators shall only use equipment with a DFS mechanism that is turned on when operating in these bands. The device must sense for radar signals at 100 percent of its emission bandwidth. The minimum DFS detection threshold for devices with a maximum e.i.r.p. of 200 mW to 1 W (23–30 dBm) is −64 dBm. For devices that operate with less than 200 mW (23 dBm) e.i.r.p. and a power spectral density of less than 10 dBm in a 1 MHz band, the minimum detection threshold is −62 dBm. The detection threshold is the received power averaged over 1 microsecond referenced to a 0 dBi antenna. For the initial channel setting, the manufacturers shall be permitted to provide for either random channel selection or manual channel selection.

(i) Operational Modes. The DFS requirement applies to the following operational modes:

(A) The requirement for channel availability check time applies in the master operational mode.

(B) The requirement for channel move time applies in both the master and slave operational modes.

(ii) Channel Availability Check Time. A U-NII device shall check if there is a radar system already operating on the channel before it can initiate a transmission on a channel and when it has to move to a new channel. The U-NII device may start using the channel if no radar signal with a power level greater than the interference threshold values listed in paragraph (h)(2) of this section, is detected within 60 seconds.

(iii) Channel Move Time. After a radar's presence is detected, all transmissions shall cease on the operating channel within 10 seconds. Transmissions during this period shall consist of normal traffic for a maximum of 200 ms after detection of the radar signal. In addition, intermittent management and control signals can be sent during the remaining time to facilitate vacating the operating channel.

(iv) Non-occupancy Period. A channel that has been flagged as containing a radar system, either by a channel availability check or in-service monitoring, is subject to a non-occupancy period of at least 30 minutes. The non-occupancy period starts at the time when the radar system is detected.

Table 7.1-1: *DFS Response Requirement Values*

Parameter	Value
Non-occupancy period	Minimum 30 minutes
Channel Availability Check Time	60 seconds
Channel Move Time	10 seconds[1]
Channel Closing Transmission Time	200 milliseconds + an aggregate of 60 milliseconds over remaining 10 second period[1 and 2]
U-NII Detection Bandwidth	Minimum 100% of the 99% power bandwidth[3]

Notes: [1] The instant that the *Channel Move Time* and the *Channel Closing Transmission Time* begins is as follows:

- For the Short pulse radar Test Signals this instant is the end of the Burst.
- For the Frequency Hopping radar Test Signal, this instant is the end of the last radar Burst generated.
- For the Long Pulse radar Test Signal this instant is the end of the 12 second period defining the radar transmission.

[2] The *Channel Closing Transmission Time* is comprised of 200 milliseconds starting at the beginning of the *Channel Move Time* plus any additional intermittent control signals required to facilitate Channel changes (an aggregate of 60 milliseconds) during the remainder of the 10 second period. The aggregate duration of control signals will not count quiet periods in between transmissions.

[3] During the *U-NII Detection Bandwidth* detection test, radar type 0 is used and for each frequency step the minimum percentage of detection is 90%. Measurements are performed with no data traffic.

Table 7.1-2: *Summary of the requirements*

Description	Radar type	Requirement	Notes
5.2 DFS Detection Threshold	Type 0	−64 dBm	Any BW
7.8.1 U-NII Detection Bandwidth	Type 0–4 (any)	100 % of 99 % BW	10 trials for each BW
7.8.2.1 Initial Channel Availability Check (CAC) Time	Type 0–4 (any)	≥60 s	Any BW
7.8.2.2 Radar Burst at the Beginning of the CAC	Type 0–4 (any)	No Tx	Any BW
7.8.2.3 Radar Burst at the End of the CAC	Type 0–4 (any)	No Tx	Any BW
7.8.3 Channel Move Time	Type 0	≤10 s	Widest BW
7.8.3 Channel Closing Transmission Time	Type 0	≤200 ms	Widest BW
7.8.3 Non-Occupancy Period	Type 0	>30 min	
7.8.4 Statistical Performance Check:	Type 1–6 (all)		Each BW; Each 20 MHz channels + center
7.8.4.1 Short Pulse Radar Test	Type 1–4 (all)	60% detection	30 trials (for each type)
7.8.4.2 Long Pulse Radar Test	Type 5	80% detection	30 trials
7.8.4.3 Frequency hopping Radar Test	Type 6	70% detection	30 trials

Section 8. Testing data

8.1 Channel closing transmission and move time

8.1.1 Definitions and limits

Maximum channel closing transmission time is 200 milliseconds + an aggregate of 60 milliseconds over remaining 10 second period.
Maximum channel move time is 10 seconds.

8.1.2 Test summary

Test date	November 22, 2017	Temperature	22 °C
Test engineer	Kevin Rose	Air pressure	1004 mbar
Verdict	Pass	Relative humidity	37 %

8.1.3 Observations, settings and special notes

The test was performed on the widest channel BW, which is 80 MHz with the use of Radar type 0.

8.1.4 Test data

Table 8.1-1: *Channel closing transmission time results*

Measured closing transmission time, ms	Limit, ms	Margin, ms
0	200.00	200

Table 8.1-2: *Channel move time results*

Measured move time, s	Limit, s	Margin, s
0.008656	10.00	9.91344

Table 8.1-3: *Channel closing transmission and move time measurement results*

Region	Start, s	End, s	Measured, ms	Limit, ms
0	0	0.2	0	200
1	0.2	10	8.656	60
2	10	12	0	0

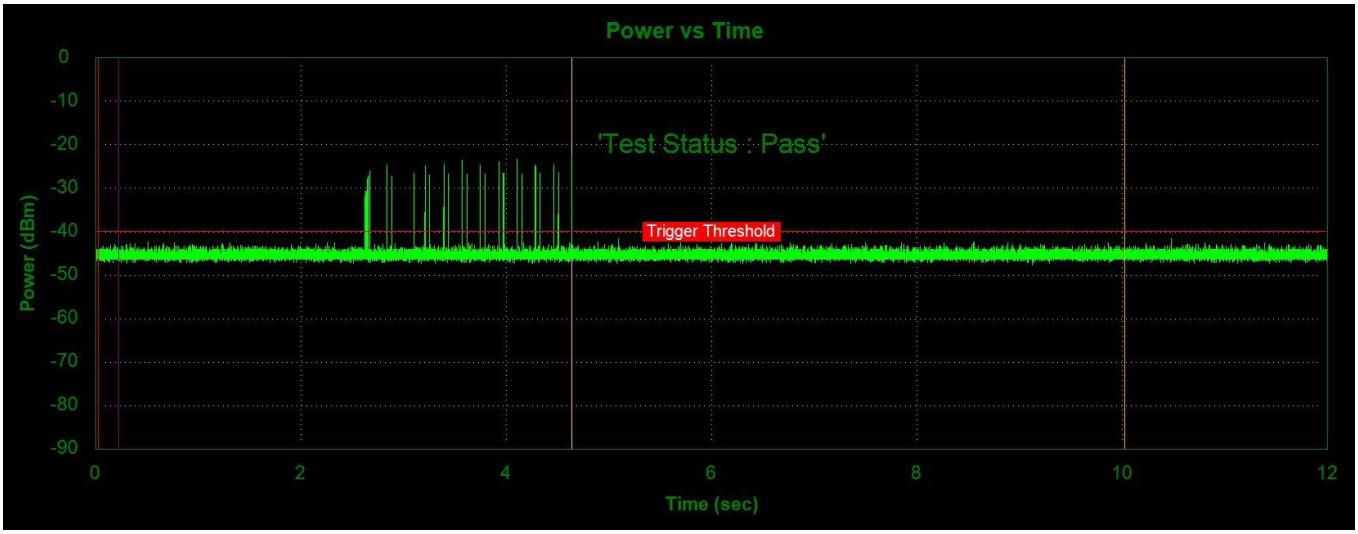

Figure 8.1-1: *Channel closing transmission and move time*

8.2 Non-occupancy period

8.2.1 Definitions and limits

Non-occupancy period minimum is 30 minutes.

8.2.2 Test summary

Test date	November 22, 2017	Temperature	22 °C
Test engineer	Kevin Rose	Air pressure	1004 mbar
Verdict	Pass	Relative humidity	37 %

8.2.3 Observations, settings and special notes

The EUT was monitored for more than 30 minutes following instant T_2 (the end of Radar pulses) to verify that the EUT does not resume any transmissions on this Channel. This test was performed once on the widest channel BW, which is 80 MHz with the use of Radar type 0.

8.2.4 Test data

Table 8.2-1: *Non-occupancy period results*

Measured Non-occupancy period, min	Minimum limit, min	Margin, min
30	>30	>0

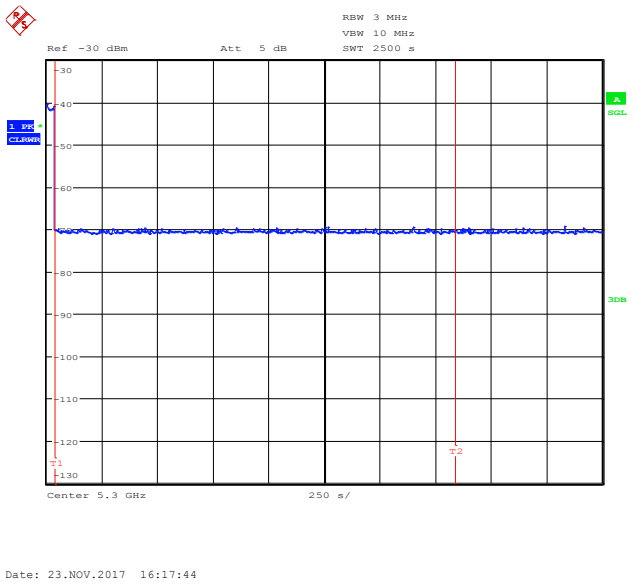

Figure 8.2-1: *Non-occupancy period*

Section 9. Block diagrams of test set-ups
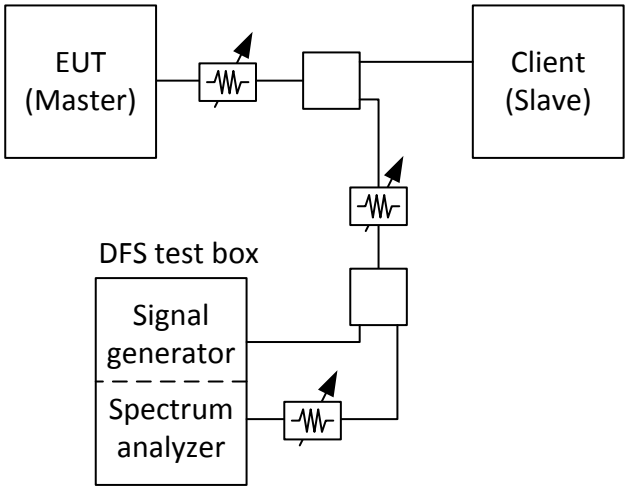
9.1 Test set-up diagram