2WAY-UNIVKF
Bi-Directional LCD KeyFob
Installation Instructions

© NAPCO 2004

WI1024J 1/04

2WAY-UNIVKF - The 2-Way Universal LCD Keyfob that puts the power of a keypad in your pocket.

Easy LCD ICON Indicators

Burglar Alarm
Fire Alarm
Armed - Away
Armed - Stay
Armed - Instant
Armed - Zones Bypassed
Disarmed - Zones Faulted
Disarmed - System Ready
Transmit
System Trouble

Note: Grey ICON indicates pulsing

NAPCO introduces the new 2WAY-UNIVKF, the security industry's only universal bi-directional Keyfob with LCD status display and integral mini sounder, supported by a revolutionary 2-way receiver.

Designed to be compatible with most major control panel brands, including NAPCO's Gemini and Magnum and others such as ADEMCO, DSC and more, this 2-Way Keyfob is super-miniaturized for portability yet packs tremendous sales potential and consumer market appeal.

System Status is indicated through 7 intuitive ICONS (a lock, a house, a flame, etc.) on the LCD display, accompanied by corresponding beep sequences on its mini sounder. Providing both easily understood visual and audible feedback, the user always knows with certainty that the system has carried out their command.

In addition to the many standard commands it can issue the system, it can also control up to 2 groups of lighting control, such as X-10, and up to 2 separate Garage Doors.

NAPCO 2WAY-UNIVKF keyfobs are also sold in a kit with the 2-way receiver, Model 2WAY–UNIVKFKIT. Each receiver supports up to 7 keyfobs.

THE FOLLOWING STATEMENT IS REQUIRED BY THE FCC.
INSTRUCTION TO THE USER (if device contains a digital device)

This equipment has been tested and found to comply with the limits for a class B digital device, pursuant to part 15 of the FCC Rules. These limits are designed to provide reasonable protection against harmful interference in a residential installation. This equipment generates, uses and can radiate radio frequency energy and if not installed and used in accordance with the instructions, may cause harmful interference to radio communications. However, there is no guarantee that interference will not occur in a particular installation. If this equipment does cause harmful interference to radio or television reception, which can be determined by turning the equipment off and on, the user is encouraged to try to correct the interference by one or more of the following measures:

* Reorient or relocate the receiving antenna.
* Increase the separation between the equipment and receiver.
* Connect the equipment into an outlet on a circuit different from that to which the receiver is connected.
* Consult the dealer or an experienced radio/TV technician for help.

This equipment has been certified to comply with the limits for a class B computing device, pursuant to FCC Rules. In order to maintain compliance with FCC regulations, shielded cables must be used with this equipment. Operation with non-approved equipment or unshielded cables is likely to result in interference to radio and TV reception. The user is cautioned that changes and modifications made to the equipment without the approval of manufacturer could void the user's authority to operate this equipment.

TABLE OF CONTENTS

Section	Page
GENERAL DESCRIPTION	3
SYSTEM OVERVIEW	4
WIRING DIAGRAM/ CONFIGURATION	5
CONTROLS AND AUDIBLE INDICATORS	6
VISUAL INDICATORS	7
BUS MODE WIRING AND CONFIG	8
BUS MODE ENROLLING KEYFOBS	9-11
BUS MODE ENROLLING USER CODES	12-14
BUS MODE GARAGE DOOR & SPECIAL APPS	15
BUS MODE - TYPICAL APPLICATIONS	16
UNIVERSAL MODE WIRING ARM/DISARM/PANIC	17
UNIVERSAL MODE ENROLLING KEYFOBS	18
UNIVERSAL MODE ARM / ALARM SENSE	19
UNIVERSAL MODE WIRING FOR STAY MODE	20
UNIVERSAL MODE GARAGE DOOR CONTROL	21
CHANGING THE KEYFOB BATTERY	21
UNIVERSAL MODE - TYPICAL APPLICATIONS	22
WARRANTY	24

General Description

The 2WAY-UNIVKF is a miniature remote control device which provides wireless control of the security system and confirms system status visually and audibly with an LCD ICON display and mini sounder. It is keypad bus compatible with the NAPCO Gemini Series control panels as well as the Ademco Vista 10, 20, 40 & 50 series. It is also universally compatible with any control panel which offers keyswitch arming with an armed status output.

Keypad Bus compatible control panels:

NAPCO: GEM-P816
GEM-P1632
GEM-P3200
GEM-P9600

Ademco: Vista 10
Vista 20
Vista 40
Vista 50

For additonal information and details on universal operation, see system overview on page 4.

Features

- 3 Form C Relay Outputs
  - Arm/Disarm
  - Panic
  - Garage Door Control
- Lighting Control or Second Garage Door control

Specifications

- Input Voltage: 12V DC Nominal
- Input Current: 40mA standby, 90mA max. (all relays active)
- Operating Temperature: 0-49°C (32-120°F)
- Maximum # of KeyFobs supported: 7
- Dimensions:
  - Receiver: 6 3/4“ X 3 5/8” X 1 1/2”
  - KeyFob: 2 “ X 1 3/8” X 1/2”
- Relay Contact Rating: 1A @ 24 VDC
- KeyFob Battery: 1.5V Alkaline AAA size
- Frequency: 433.92 Mhz
- Operating Range: 750 feet (open air)

NAPCO Security Systems, Inc.
333 Bayview Avenue, Amityville, New York 11701
For Sales and Repairs, call Toll Free: (800) 645-9445

For Technical Assistance, Contact the NAPCO
Toll Free Helpline ☎ (800) 645-9440

SYSTEM OVERVIEW

The 2WAY-UNIVKF is compatible with virtually any control panel, either through keypad bus operation or universal mode operation. When used on a panel on which it is bus-compatible, full functionality is realized, including lighting, appliance and X10 control. When used in the Universal Mode, functionality is dependent on the feature set of the control panel, such as a keyswitch arm zone for arm / disarm capability, an armed output to provide an Armed indication, a steady bell output for an alarm indication, etc.

Bus Mode Features

Keyfob Commands
- Arm / Disarm
- Stay Mode Arming
- Arming with Instant Protection
- Panic
- Garage Door Control
- Appliance Control 1 / † Relay Group 1 Control
- Garage 2 or Appliance Control 2/ † Relay Group 2 Control

Keyfob Indicators
- Armed
- Armed Stay
- Armed Instant
- Armed / Zones Bypassed
- Disarmed / System Ready
- Disarmed / Zones Faulted
- Alarm
- Alarm Memory
- Fire Alarm
- System Trouble

† NAPCO GEM-P3200 & P9600 only

This manual is divided into 3 sections which are marked on the outer border of each page - **General Information** (pages 2-7), **Bus Mode Operation** (pages 8-16) and **Universal Operation** (pages 17-23). After reviewing the General Information section for an overview of the system, refer to the section which applies to the type of installation at hand, Bus or Universal.

***Each section includes 3 mandatory steps* (marked at the top of the page) *which must be completed to achieve an operational system.* All other steps are optional.**

◀ Use these tables to determine the Keyfob functionality you can expect from the control panel's features. ▼

Universal Mode Features	
Keyfob Commands	**Required Control Panel Feature**
• Arm / Disarm	Keyswitch arm zone or input (Momentary)
• Stay Mode Arming	Automatic Interior Bypass
• Panic	24 hour panic zone
• Garage Door Control	Standard

Keyfob Indicators	Required Control Panel Feature
• Armed / Disarmed	Armed output or lug (high or low)
• Armed Stay	Automatic Interior Bypass
• Alarm	Steady bell output (high or low)
• Alarm Memory	Steady bell output (high or low)
• Fire Alarm	Pulsing Bell output (high or low)

WIRING DIAGRAM AND SYSTEM CONFIGURATION

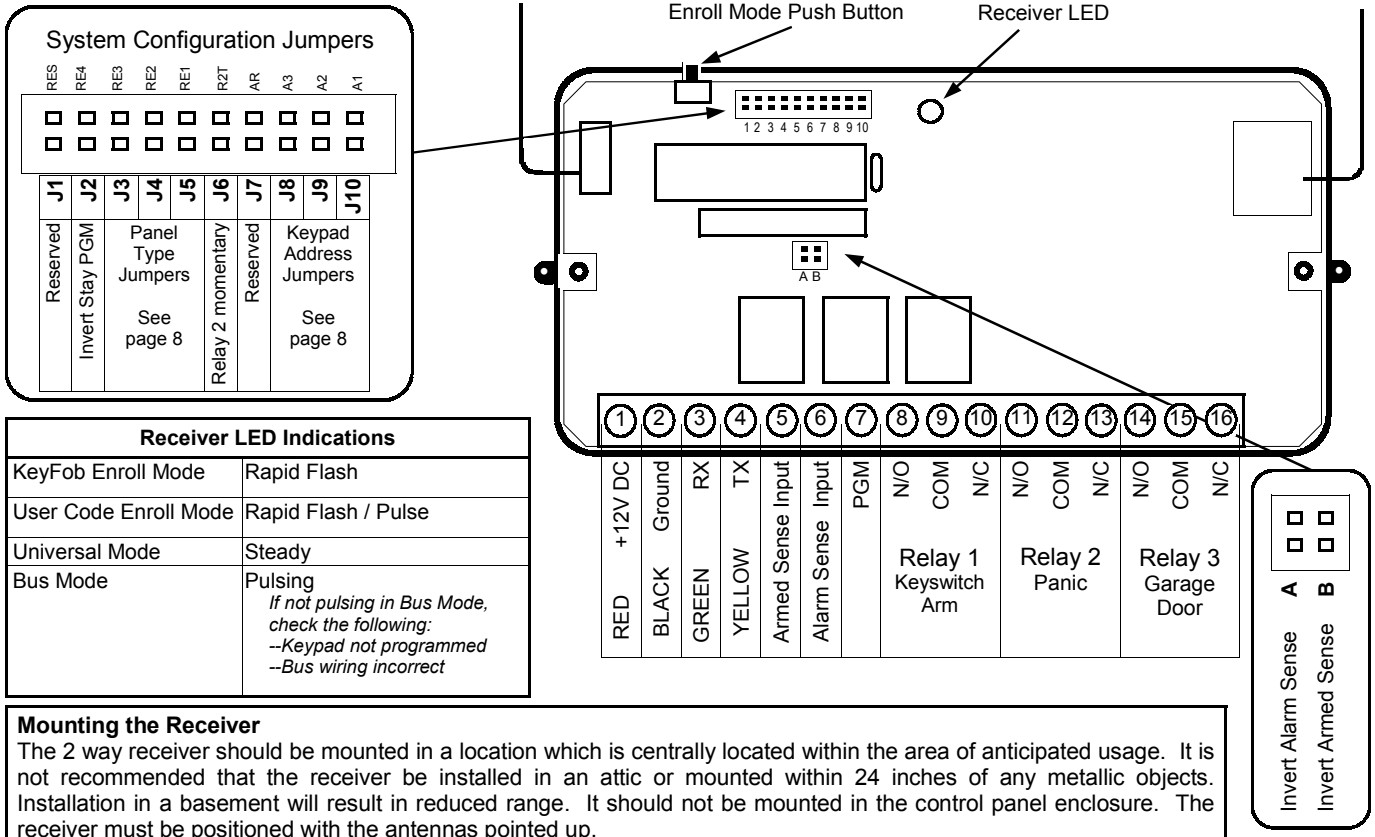

Receiver LED Indications	
KeyFob Enroll Mode	Rapid Flash
User Code Enroll Mode	Rapid Flash / Pulse
Universal Mode	Steady
Bus Mode	Pulsing *If not pulsing in Bus Mode, check the following:* *--Keypad not programmed* *--Bus wiring incorrect*

Mounting the Receiver

The 2 way receiver should be mounted in a location which is centrally located within the area of anticipated usage. It is not recommended that the receiver be installed in an attic or mounted within 24 inches of any metallic objects. Installation in a basement will result in reduced range. It should not be mounted in the control panel enclosure. The receiver must be positioned with the antennas pointed up.

CONTROLS AND INDICATORS

Controls

The KeyFob's 4 command buttons provide complete system control. Commands are issued to the alarm system by either pressing or holding down (for 2 seconds) the appropriate button.

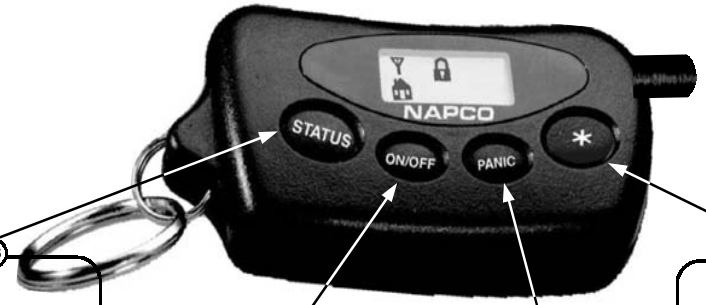

STATUS

Press **STATUS** to update the display with the current system status.

The proper icon(s) will appear, accompanied by the appropriate beep(s). (see Audible Indicators)

The icon(s) will automatically go out in about 6 seconds.

ON/OFF

Press **ON/OFF** to arm or disarm the alarm system.
Hold Down **ON/OFF** to Arm the system in STAY mode.
Press and hold again to activate Instant arming.

PANIC

Hold Down **PANIC** for 2 seconds to activate a panic alarm.

ON/OFF AND *

Press **ON/OFF** and * simultaneously to activate lighting or other special application.†

*****

Press * to open garage door

Hold Down * for 2 seconds to activate lighting or other special application. †

OR

Hold Down * for 2 seconds to open a second garage door. †

† Bus Operation Only

Audible Indicators

Each time a command is issued, the KeyFob's mini sounder will issue an audible confirmation beep with the visual indication.

# of Beeps	Status
1	Armed
2	Disarmed
3	Armed, Stay mode
4	Armed, zones bypassed
5 †	System Trouble
6... (repeats)	Alarm !

CONTROLS AND INDICATORS

Visual LCD Indicators

The 2WAY-UNIVKF uses a series of icons to convey the status of the system. Each time the STATUS button is pressed, or a command is issued, the appropriate icon(s) will display for about 6 seconds. For example, if ON/OFF is pressed to arm the system, the Armed icon will light in a few seconds to confirm that the command was successfully performed. Below is a description of each icon indicator. *Please note that the icons marked "†" are optional and may not apply to all systems.*

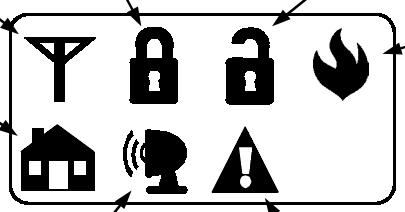

Transmit Each time a button is pressed the transmit ICON will light to indicate that the KeyFob is transmitting to the receiver.

Armed The system is armed.

Armed Bypassed † (slowly flashing) the system is armed with zones bypassed.

System Ready The system is disarmed, with all zones secure. The system is ready to arm.

Zones Faulted † (slowly flashing) Disarmed, zones faulted.

Stay Mode † The system is armed with interior zones bypassed.

Instant Mode † The system is armed with Instant protection.

Fire Alarm † (flashing) The system is in a fire alarm condition.

System in Alarm / Alarm Memory (flashing) The system alarm is sounding or an alarm has occurred while you were away. Proceed with caution!

System Trouble † The alarm system is in a trouble condition. Consult keypad and owners manual for the exact nature of the trouble.

STEP 1 - WIRING AND CONFIGURATION

Wiring
The 2WAY-UNIVKF is compatible with the keypad bus of the NAPCO Gemini GEM-P816, GEM-P1632, GEM-P3200 and GEM-P9600 control panels. It is also compatible with the keypad bus of the Ademco models Vista 10, 20, 40 & 50. **Note:** For Bus Operation, DO NOT connect any wires to terminals 5 & 6.

Programming
The Gemini and Ademco Vista 40 & 50 control panels must be programmed for an additional keypad. *For example, if the installation currently has 2 keypads, an additional keypad, keypad # 3 must be enabled in programming.* This is not required for the Ademco Vista 10 and 20.

If KeyFob panic is desired, Keypad Panic should be enabled in the control panel program. For the Ademco Vista 10 and 20, zone 95 must be programmed for 24 Hr Audible or 24 Hr Silent. For the Vista 40 & 50 zone 99 must be programmed for 24 Hr Audible or 24 Hr Silent.

Configuring the Receiver Address
For the NAPCO Gemini and Vista 40 & 50 bus operation, the receiver must be addressed to match the address of the additional keypad enabled in programming above. *For example, if the receiver is to be addressed as keypad 3, refer to the Receiver Address Chart and install the appropriate address jumpers (J8 off, J9 ON, J10 ON).* This is not required for the Ademco Vista 10 and 20.

Configuring the Control Panel Type
For a bus compatible installations only, refer to the Panel Type Configuration chart to determine the correct jumper settings for control panel being used.

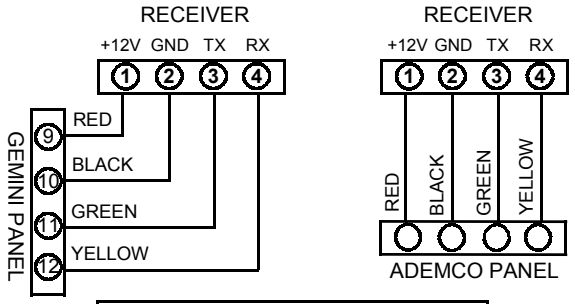

RECEIVER ADDRESS CHART			
KEYPAD	ADDRESS JUMPERS		
#	J8	J9	J10
1	off	off	off
1	off	off	ON
2	off	ON	off
3	off	ON	ON
4	ON	off	off
5	ON	off	ON
6	ON	ON	off
7	ON	ON	ON

PANEL TYPE CONFIG. CHART			
PANEL TYPE	CONFIG. JUMPERS		
	J3	J4	J5
NAPCO GEM-P816, P1632, P3200, P9600	off	off	off
NAPCO GEM-P816 V10A, P1632 V10A, P3200V30A, P9600V30A using "K" Series Keypads.	off	ON	ON
Ademco Vista 10, 20	off	off	ON
Ademco 40, 50	off	ON	off

STEP 2 - ENROLLING KEYFOBS--With NAPCO "Classic" Keypads

Enrolling and Removing KeyFobs

Each KeyFob must be enrolled into the receiver. The following procedure is used to enroll the unique RF ID number stored in the non-volatile memory of each KeyFob into the receiver memory.

1 Arm system from any keypad

2 Disarm system from any keypad

3 Press **1114** ON/OFF on keypad → The Enroll Mode LED will flash rapidly.
The keypad will give error beeps - ignore.

4 Press the ∗ button on KeyFob 1 → The KeyFob will sound a single confirmation beep.

.... Repeat for each KeyFob to be enrolled

Press RESET on Keypad → Exit Enroll Mode - the Enroll Mode LED will start to slowly pulse.
The KeyFob will give a series of beeps and the unlock icon will display.

- The Keyfob Enroll Mode may also be entered / exited by pressing the the Enroll Mode Push Button on the top of the receiver. See page 18 for more information.

- **To Remove a lost KeyFob from the system:** Enter and then exit the Keyfob Enroll Mode (Arm and disarm the system, enter 1114 ON/OFF and then press RESET). All keyfobs will be deleted from the system.

For NAPCO "K Series" Keypads, see pages 10 and 13.
For Ademco Keypads, see pages 11 and 14

NAPCO "Classic" Keypads	NAPCO "K Series" Keypads
GEM-RP1CAe2, GEM-RP2ASe2, GEM-RP3DGTL	GEM-K1CA, GEM-K2AS, GEM-K3DGTL, GEM-K4RF

STEP 2 - ENROLLING KEYFOBS--With NAPCO "K Series" Keypads

Enrolling and Removing KeyFobs

Each KeyFob must be enrolled into the receiver. The following procedure is used to enroll the unique RF ID number stored in the non-volatile memory of each KeyFob into the receiver memory.

1 Arm system from any keypad

2 Disarm system from any keypad

3 Press **1114** [Arm-Disarm] on keypad → The Enroll Mode LED will flash rapidly. *The keypad will give error beeps - ignore.*

4 Press the ∗ button on KeyFob 1 → The KeyFob will sound a single confirmation beep.

.... Repeat for each KeyFob to be enrolled

Press [RESET] on Keypad → Exit Enroll Mode - the Enroll Mode LED will slowly pulse. *The KeyFob will give a series of beeps and the unlock icon will display.*

- The Keyfob Enroll Mode may also be entered / exited by pressing the the Enroll Mode Push Button on the top of the receiver. See page 18 for more information.
- **To Remove a lost KeyFob from the system:** Enter and then exit the Keyfob Enroll Mode (Arm and disarm the system, enter 1114 [Arm-Disarm] and then press [RESET]). All keyfobs will be deleted from the system.

For NAPCO "Classic" Keypads, see pages 9 and 12.
For Ademco Keypads, see pages 11 and 14

NAPCO "Classic" Keypads	NAPCO "K Series" Keypads
GEM-RP1CAe2, GEM-RP2ASe2, GEM-RP3DGTL	GEM-K1CA, GEM-K2AS, GEM-K3DGTL, GEM-K4RF

2WAY-UNIVKF_WI1024J.19_I...
page 10
Friday, February 13, 2004 08:57
Composite

STEP 2 - ENROLLING KEYFOBS--With ADEMCO Panels/Keypads

Enrolling and Removing KeyFobs

Each KeyFob must be enrolled into the receiver. The following procedure is used to enroll the unique RF ID number stored in the non-volatile memory of each KeyFob into the receiver memory.

1 Arm system from any keypad

2 Disarm system from any keypad

3 Press **1114**, then [AWAY] on keypad → The Enroll Mode LED will flash rapidly.
The keypad may sound error beeps - ignore.*

4 Press the ∗ button on KeyFob 1 → The KeyFob will sound a single confirmation beep.

.... Repeat for each KeyFob to be enrolled

Press [RESET] on Keypad → Exit Enroll Mode - the Enroll Mode LED will slowly pulse. *The KeyFob will give a series of beeps and the unlock icon will display.*

- The Keyfob Enroll Mode may also be entered / exited by pressing the the Enroll Mode Push Button on the top of the receiver. See page 18 for more information.
- **To Remove a lost KeyFob from the system:** Enter and then exit the Keyfob Enroll Mode (Arm and disarm the system, enter 1114 [AWAY] and then press [#]). All keyfobs will be deleted from the system.

For NAPCO "Classic" Keypads, see pages 9 and 12.
For NAPCO "K Series" Keypads, see pages 10 and 13.

*Some Vista models will beep, others will not. Ignore all beeps.

STEP 3 - ENROLLING USER CODES--With NAPCO "Classic" Keypads

Enrolling User Codes into the 2 Way receiver

After all KeyFobs have been enrolled as described in step 2, a 4-digit User Code must be enrolled into the receiver for each KeyFob. *If you have enrolled 3 KeyFobs, you must program into the control panel (3) 4-digit User Codes and then use the following procedure to enroll these User Codes into the receiver.* The receiver will hold these User Codes in its non-volatile memory and use them to arm/disarm the system upon command from the KeyFob. This User Code Enrollment feature allows the control panel to uniquely identify each KeyFob used to arm and disarm the system, log KeyFob opening/closing activity in its event buffer and report openings and closings by KeyFob user if desired. ***Note: Before proceeding, a 4 digit User Code representing each KeyFob must be programmed into the control panel.***

1 Arm system from any keypad (using any User Code)

2 Disarm system from any keypad

3 Press **1113** [ON/OFF] → Enroll Mode LED will flash / pulse

The keypad will give error beeps - ignore.

4 Enter ***4 digit User Code*** for KeyFob # 1, press [ON/OFF] → System will Arm

5 Reenter the ***4 digit User Code*** for KeyFob # 1, [ON/OFF] → System will Disarm

6 Observe automatic reciever test of user code. → System will test User Code by quickly Arming and Disarming

... Repeat steps 4 & 5 for each KeyFob to be enrolled.

- Press [RESET] on Keypad → Exit Enroll Mode-the Enroll Mode LED will slowly pulse

Note: *If these user codes are changed in control panel programming, the new user codes must be re-enrolled into the receiver.*

For NAPCO "K Series" Keypads, see pages 10 and 13.
For Ademco Keypads, see pages 11 and 14

NAPCO "Classic" Keypads	NAPCO "K Series" Keypads
GEM-RP1CAe2, GEM-RP2ASe2, GEM-RP3DGTL	GEM-K1CA, GEM-K2AS, GEM-K3DGTL, GEM-K4RF

STEP 3 - ENROLLING USER CODES--With NAPCO "K Series" Keypads

Enrolling User Codes into the 2 Way receiver

After all KeyFobs have been enrolled as described in step 2, a 4-digit User Code must be enrolled into the receiver for each KeyFob. *If you have enrolled 3 KeyFobs, you must program into the control panel (3) 4-digit User Codes and then use the following procedure to enroll these User Codes into the receiver.* The receiver will hold these User Codes in its non-volatile memory and use them to arm/disarm the system upon command from the KeyFob. This User Code Enrollment feature allows the control panel to uniquely identify each KeyFob used to arm and disarm the system, log KeyFob opening/closing activity in its event buffer and report openings and closings by KeyFob user if desired. ***Note: Before proceeding, a 4 digit User Code representing each KeyFob must be programmed into the control panel.***

1 Arm system from any keypad (using any User Code)

2 Disarm system from any keypad

3 Press **1113** [ENTER] → Enroll Mode LED will flash / pulse

The keypad will give error beeps - ignore.

4 Enter ***4 digit User Code*** for KeyFob # 1, press [AWAY] → System will Arm

5 Reenter the ***4 digit User Code*** for KeyFob # 1, [ENTER] → System will Disarm

6 Observe automatic reciever test of user code. → System will test User Code by quickly Arming and Disarming

... Repeat steps 4 & 5 for each KeyFob to be enrolled.

- Press [RESET] on Keypad → Exit Enroll Mode-the Enroll Mode LED will slowly pulse

Note: *If these user codes are changed in control panel programming, the new user codes must be re-enrolled into the receiver.*

For NAPCO "Classic" Keypads, see pages 9 and 12.
For Ademco Keypads, see pages 11 and 14

NAPCO "Classic" Keypads	NAPCO "K Series" Keypads
GEM-RP1CAe2, GEM-RP2ASe2, GEM-RP3DGTL	GEM-K1CA, GEM-K2AS, GEM-K3DGTL, GEM-K4RF

STEP 3 - ENROLLING USER CODES--With ADEMCO Panels/Keypads

Enrolling User Codes into the 2 Way receiver

After all KeyFobs have been enrolled as described in step 2, a 4-digit User Code must be enrolled into the receiver for each KeyFob. *If you have enrolled 3 KeyFobs, you must program into the control panel (3) 4-digit User Codes and then use the following procedure to enroll these User Codes into the receiver.* The receiver will hold these User Codes in its non-volatile memory and use them to arm/disarm the system upon command from the KeyFob.

This User Code Enrollment feature allows the control panel to uniquely identify each KeyFob used to arm and disarm the system, log KeyFob opening/closing activity in its event buffer and report openings and closings by KeyFob user if desired.

Note: Before proceeding, a 4 digit User Code representing each KeyFob must be programmed into the control panel.

1 Arm system from any keypad (using any User Code)

2 Disarm system from any keypad

3 Press **1113** [AWAY] → Enroll Mode LED will flash / pulse
The keypad may sound error beeps - ignore.*

4 Enter ***4 digit User Code*** for KeyFob # 1, press [AWAY] → System will Arm

5 Reenter the ***4 digit User Code*** for KeyFob # 1, [OFF] → System will Disarm

6 Observe automatic reciever test of user code. → System will test User Code by quickly Arming and Disarming

... Repeat steps 4 & 5 for each KeyFob to be enrolled.

• Press [#] on Keypad → Exit Enroll Mode-the Enroll Mode LED will slowly pulse

Note: *If these user codes are changed in control panel programming, the new user codes must be re-enrolled into the receiver.*

For NAPCO "Classic" Keypads, see pages 9 and 12.
For NAPCO "K Series" Keypads, see pages 10 and 13.

*Some Vista models will beep, others will not. Ignore all beeps.

GARAGE DOOR CONTROL / SPECIAL APPLICATIONS

When installed on the bus of a Gemini or Ademco control panel, receiver Relays 1 and 2 are available for other applications such as lighting or appliance control, while Relay 3 remains dedicated to the control of a garage door opener.

- Press [ON/OFF] and [*] simultaneously to toggle Relay 1 On / Off
- Hold Down [*] for 2 seconds to toggle Relay 2 On / Off

  OR
- Hold Down [*] for 2 sec. to momentarily activate Relay 2 to open a second garage door. (Install Jumper 6 - Relay 2 momentary).

Relay 3 Garage Door Control

Press [*] to momentarily activate Relay 3 to open a garage door.

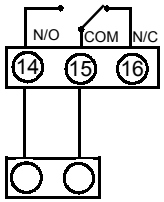

Garage door opener wall mounted push-button, or normally open garage door opener input.

Relay 1 Appliance Control

Press [ON/OFF] and [*] simultaneously to toggle Relay 1 On / Off

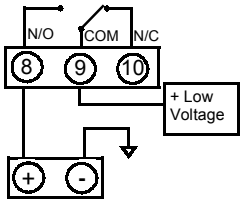

Lighting or other special application device.

Relay 2 Appliance Control

Hold Down [*] for 2 seconds to toggle Relay 2 On / Off

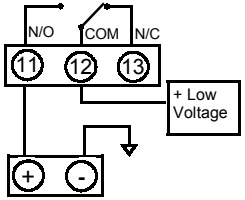

Lighting or other special application device.

Relay 2 Second Garage Door Control

Hold Down [*] for 2 sec. to momentarily activate Relay 2 to open a second garage door.

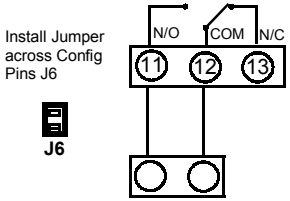

Garage door opener wall mounted push-button, or normally open garage door opener input.

Gemini Relay Control Group Support

When used on a Gemini series control which supports Relay Control Groups (GEM-P3200 & P9600), each time the KeyFob is used to activate Relay 1 or Relay 2, Relay Control groups 1 & 2 are also simultaneously activated, allowing control of external (RB3008) relays and/or X-10 devices connected to the control panel.

TYPICAL APPLICATIONS

Typical Gemini control panel application controlling 2 Garage doors and X-10 devices and appliances through the 2WAY-UNIVKF Keyfob.

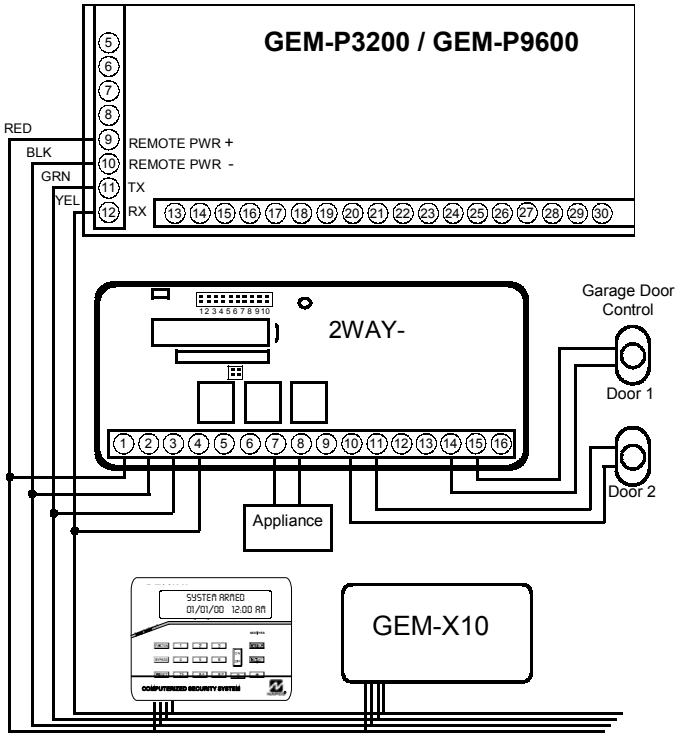

Typical Ademco control panel application controlling 1 Garage door and 2 appliances through the 2WAY-UNIVKF Keyfob.

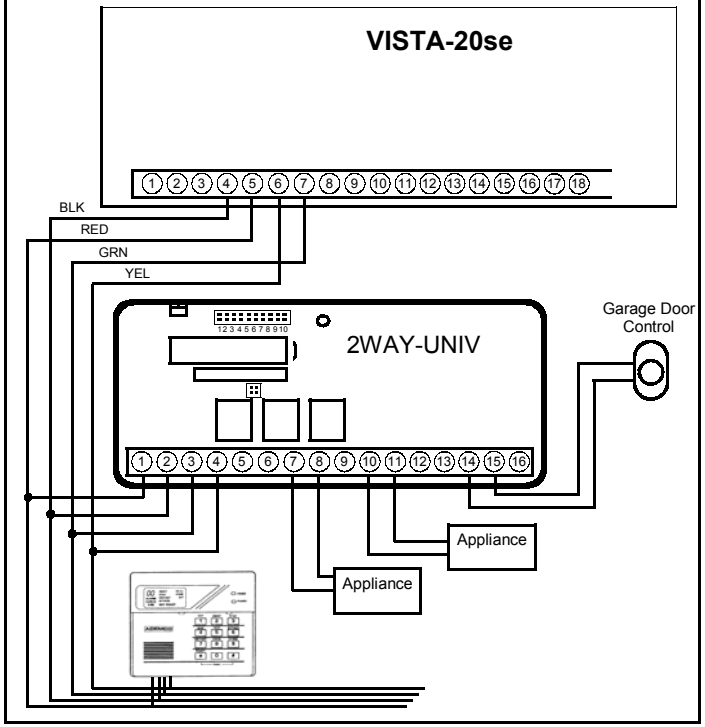

STEP 1 - WIRING FOR ARM / DISARM AND PANIC

Universal operation requires the use of control panel zones to provide Arm / Disarm and Panic operation. One zone must be programmed as a keyswitch arm zone which will process a 2 second violation as an Arm / Disarm command. The other zone must be programmed as a 24 hour panic zone, which will process a 2 second violation as a panic alarm. The wiring instructions below include wiring schemes for control panels which support zone doubling, such as the NAPCO Express series.

Wiring for Arm / Disarm

Program a zone on the control panel for "Keyswitch Arm"

- When [**ON/OFF**] is pressed, the Arm/Disarm relay will change state (from normally closed to normally open) for 2 seconds and then restore, causing the control panel to arm or disarm.

EOLR PANEL

Typical Keyswitch wiring for a zone using End of Line resistors

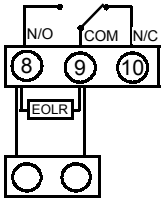

Zone programmed for Keyswitch Arm

ZONE DOUBLED PANEL

Typical Keyswitch wiring for a "zone doubled" zone

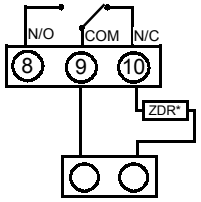

Zone programmed for Keyswitch Arm

* ZDR = Zone Doubling Resistor

Wiring for Panic

Program a zone on the control panel as a 24 Hour Panic Zone.

- When [PANIC] is pressed, the Panic relay will change state (from normally closed to normally open) for 2 seconds and then restore, causing an alarm on the the control panel Panic Zone.

EOLR PANEL

Typical Panic wiring for a zone using End of Line resistors

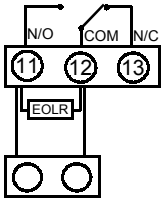

Zone programmed for 24 hour panic

ZONE DOUBLED PANEL

Typical Panic wiring for a "zone doubled" zone

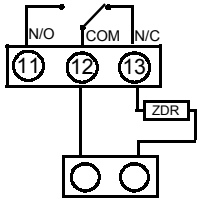

Zone programmed for 24 hour panic

* ZDR = Zone Doubling Resistor

STEP 2 - ENROLLING KEYFOBS

Enrolling and Removing KeyFobs

Each KeyFob used in the system must be enrolled into the receiver using the following procedure:

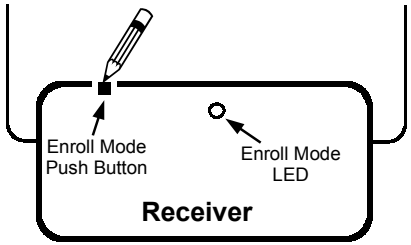

1 Use a pen or pencil to depress and hold the recessed Enroll Mode Push Button on the top of the receiver. → Entered Enroll Mode - The Enroll Mode LED will continue to flash.

2 Press the * button on KeyFob 1. → The KeyFob will sound a single confirmation beep.

3 Press the * button on KeyFob 2 (if more than one). → The KeyFob will sound a single confirmation beep.

... Repeat for each KeyFob to be programmed into system.

- Hold Down Enroll Mode Push Button or KeyFob **ON/OFF**. → Exit Enroll Mode - the Enroll Mode LED will go out.

- **To remove a lost KeyFob from the system:** Enter and then exit the Keyfob Enroll Mode. (Hold down Enroll Mode Push Button until Enroll Mode LED flashes, release and then hold down again to exit Enroll Mode). All keyfobs will be deleted from system.

STEP 3 - WIRING FOR ARM & ALARM SENSE

Wiring for Arm Sense

In Universal Mode, the receiver requires an Armed output from the control panel in order to pass the system status to the KeyFob. It may be configured for either a positive sense or negative sense.

Wiring to a control panel with an Armed output which goes **negative** upon arming.

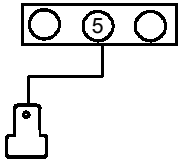

Remove Jumper from Config Pin A

A

Wiring to a control panel with an Armed output which goes **positive** upon arming.

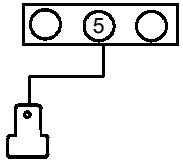

Install Jumper on Config Pin A

A

Negative = less than 3 V DC
Positive = greater than 7 V DC

Wiring for Alarm Sense

In Universal Mode, the receiver requires an Alarm output from the control panel in order to pass the correct status to the KeyFob. Typical connection will be to the bell output of the control panel. It will automatically display a siren icon for a steady input and a fire icon for a pulsing or temporal fire output.

The Alarm Sense input may be configured for either a positive or negative output.

Wiring to a control panel with an Alarm output which goes **positive** upon alarm.

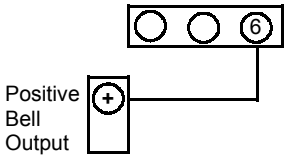

Remove Jumper from Config Pin B

B

Wiring to a control panel with an Alarm output which goes **negative** upon alarm.

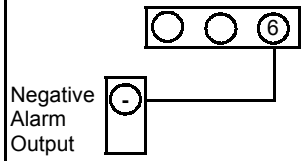

Install Jumper on Config Pin B

B

Negative = less than 3 V DC
Positive = greater than 7 V DC

Wiring for Stay Mode

When installed on a control panel which provides “Automatic Interior Bypass”, the system can be armed in either the AWAY or STAY mode through the KeyFob. *A system which provides “Automatic Interior Bypass” controls the Interior protection by automatically bypassing the Interior Zones if the system is armed and the exit/entry door is not opened.* Program the control panel for “Automatic Interior Bypass”, or for “Home Away with Delay” (for the NAPCO Express Series Stay mode). Each time the system is armed by a press of KeyFob button [**ON/OFF**], the system will arm in the AWAY mode, providing complete protection. If the KeyFob button [**ON/OFF**] is held down for 2 seconds, the system will arm in the in the STAY mode, providing perimeter protection only.

Choose the appropriate wiring scheme for your control panel.

- When KeyFob button [**ON/OFF**] is pressed, the PGM terminal of the receiver will cause a violation of the exit entry zone, which will arm the system in the AWAY mode.
- If KeyFob button [**ON/OFF**] is held down for 2 seconds, the system will arm without the PGM violation of the E/E zone, which will arm the system in the STAY mode.

EOLR PANEL

Typical STAY mode wiring for a control panel using End of Line resistors

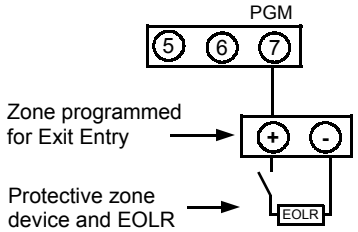

ZONE DOUBLED PANEL

Typical STAY mode wiring for a control panel using Zone Doubling

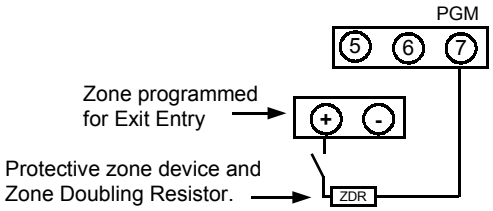

For the NAPCO Express Series and GEM-P400/P800 controls:

- Program the interior zones for for home away with delay and wire as shown.
- Install jumper J2 to invert PGM operation

Wiring for Garage Door Control

In Universal operation, the 2WAY-UNIVKF may be used to control a garage door opener, or any other access control device which requires a momentary closure for activation. The typical installation will require that the N/O and COM terminals of Relay 3 be wired across the wall mounted push-button switch for the garage door control as shown in the diagram below.

- Pressing the * button will provide a 2 second short across these terminals, prompting the garage door opener to activate.

Typical wiring for a controlling a garage door opener from KeyFob.

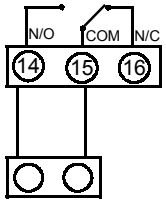

Garage door opener wall mounted push-button switch, or normally open garage door opener input.

Changing the KeyFob battery

1 Open battery compartment on back of Keyfob.

2 Remove old battery and replace with new.

3 Replace battery compartment cover

Always use only AAA 1.5 Volt alkaline batteries.

Note: There is no need to re-enroll the KeyFobs after a battery change.

TYPICAL APPLICATIONS

Typical Universal Mode applications with EOLR Control Panel (MA1008e) and Zone Doubled Control Panel (GEM-P800) using Arm and Alarm sense with Stay Mode and Garage Door control.

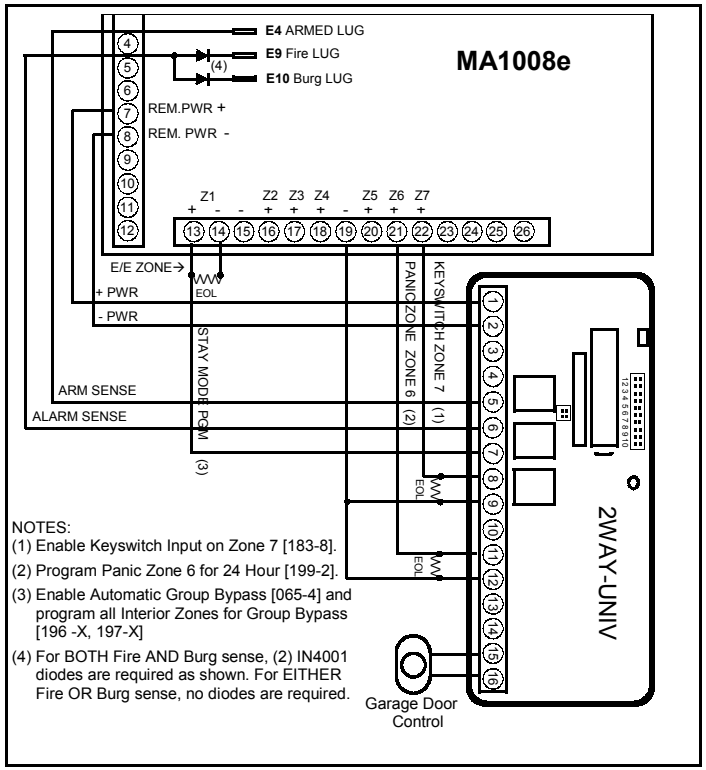

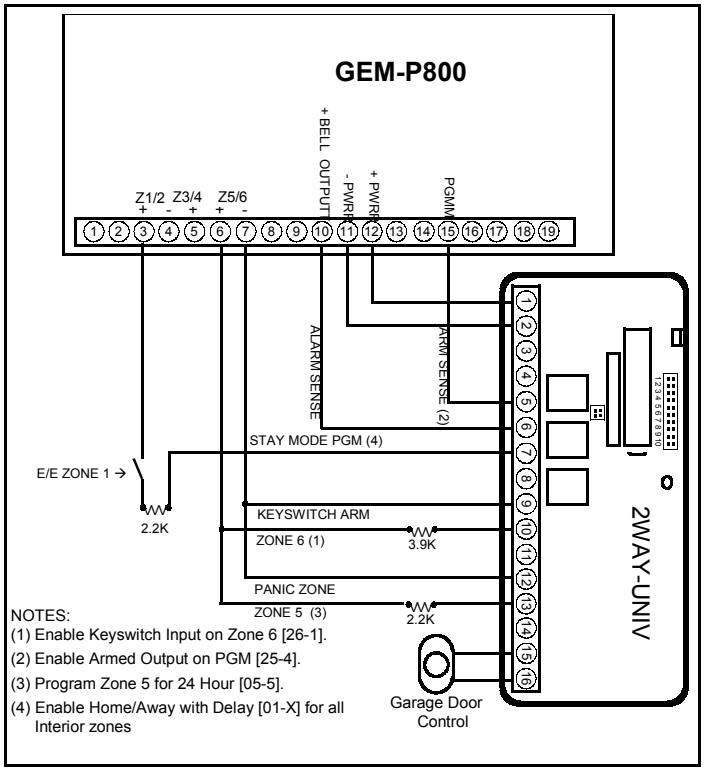

TYPICAL APPLICATIONS

Typical Universal Mode applications with EOLR Control Panels using Arm and Alarm sense with Stay Mode and Garage Door control.

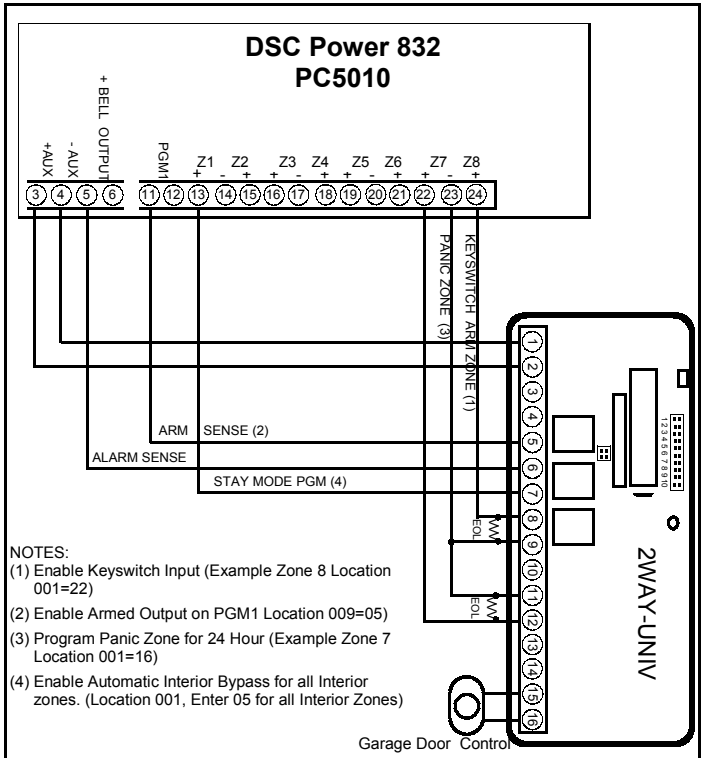

NOTES:
(1) Enable Keyswitch Input (Example Zone 8 Location 001=22)
(2) Enable Armed Output on PGM1 Location 009=05)
(3) Program Panic Zone for 24 Hour (Example Zone 7 Location 001=16)
(4) Enable Automatic Interior Bypass for all Interior zones. (Location 001, Enter 05 for all Interior Zones)

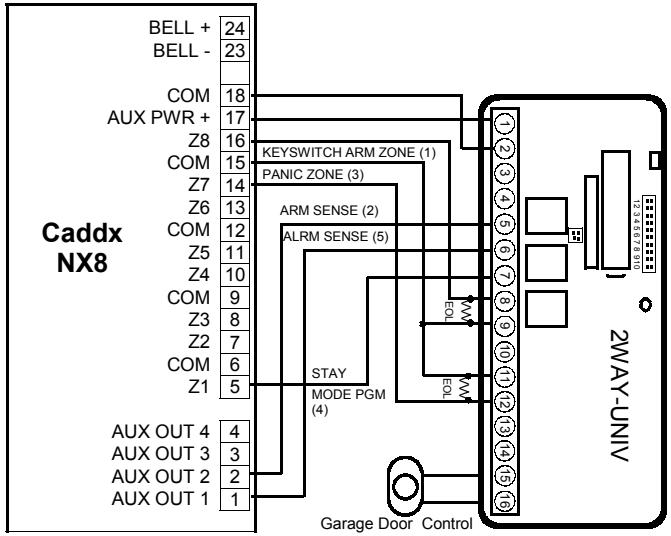

NOTES:
(1) Enable Keyswitch Input (Example Zone 8, Location 25, Segment 8=11)
(2) Enable Armed Output on AUX OUT 1. Location 47, Segment 1= 21, Segment 2=0)
(3) Program Panic Zone (Example Zone 7 (24 Hour Silent) Location 25, Segment 7= 7 and other appropriate options such as reporting, audibles, etc...)
(4) Enable Automatic Interior Bypass (Location 23, Segment 1 = 3) and set for all Interior Zones (Location 25, Segment X=18).
(5) For Burg Sense, enable Alarm Output on AUX OUT 2 (Location 48, Segment 1= 0, Segment 2=0). For both

NAPCO LIMITED WARRANTY

NAPCO SECURITY SYSTEMS, INC. (NAPCO) warrants its products to be free from manufacturing defects in materials and workmanship for thirty-six months following the date of manufacture. NAPCO will, within said period, at its option, repair or replace any product failing to operate correctly without charge to the original purchaser or user.

This warranty shall not apply to any equipment, or any part thereof, which has been repaired by others, improperly installed, improperly used, abused, altered, damaged, subjected to acts of God, or on which any serial numbers have been altered, defaced or removed. Seller will not be responsible for any dismantling or reinstallation charges.

THERE ARE NO WARRANTIES, EXPRESS OR IMPLIED, WHICH EXTEND BEYOND THE DESCRIPTION ON THE FACE HEREOF. THERE IS NO EXPRESS OR IMPLIED WARRANTY OF MERCHANTABILITY OR A WARRANTY OF FITNESS FOR A PARTICULAR PURPOSE. ADDITIONALLY, THIS WARRANTY IS IN LIEU OF ALL OTHER OBLIGATIONS OR LIABILITIES ON THE PART OF NAPCO.

Any action for breach of warranty, including but not limited to any implied warranty of merchantability, must be brought within the six months following the end of the warranty period.

IN NO CASE SHALL NAPCO BE LIABLE TO ANYONE FOR ANY CONSEQUENTIAL OR INCIDENTAL DAMAGES FOR BREACH OF THIS OR ANY OTHER WARRANTY, EXPRESS OR IMPLIED, EVEN IF THE LOSS OR DAMAGE IS CAUSED BY THE SELLER'S OWN NEGLIGENCE OR FAULT.

In case of defect, contact the security professional who installed and maintains your security system. In order to exercise the warranty, the product must be returned by the security professional, shipping costs prepaid and insured to NAPCO. After repair or replacement, NAPCO assumes the cost of returning products under warranty. NAPCO shall have no obligation under this warranty, or otherwise, if the product has been repaired by others, improperly installed, improperly used, abused, altered, damaged, subjected to accident, nuisance, flood, fire or acts of God, or on which any serial numbers have been altered, defaced or removed. NAPCO will not be responsible for any dismantling, reassembly or reinstallation charges.

This warranty contains the entire warranty. It is the sole warranty and any prior agreements or representations, whether oral or written, are either merged herein or are expressly canceled. NAPCO neither assumes, nor authorizes any other person purporting to act on its behalf to modify, to change, or to assume for it, any other warranty or liability concerning its products.

In no event shall NAPCO be liable for an amount in excess of NAPCO's original selling price of the product, for any loss or damage, whether direct, indirect, incidental, consequential, or otherwise arising out of any failure of the product. Seller's warranty, as hereinabove set forth, shall not be enlarged, diminished or affected by and no obligation or liability shall arise or grow out of Seller's rendering of technical advice or service in connection with Buyer's order of the goods furnished hereunder.

NAPCO RECOMMENDS THAT THE ENTIRE SYSTEM BE COMPLETELY TESTED WEEKLY.

Warning: Despite frequent testing, and due to, but not limited to, any or all of the following; criminal tampering, electrical or communications disruption, it is possible for the system to fail to perform as expected. NAPCO does not represent that the product/system may not be compromised or circumvented; or that the product or system will prevent any personal injury or property loss by burglary, robbery, fire or otherwise; nor that the product or system will in all cases provide adequate warning or protection. A properly installed and maintained alarm may only reduce risk of burglary, robbery, fire or otherwise but it is not insurance or a guarantee that these events will not occur. CONSEQUENTLY, SELLER SHALL HAVE NO LIABILITY FOR ANY PERSONAL INJURY, PROPERTY DAMAGE, OR OTHER LOSS BASED ON A CLAIM THE PRODUCT FAILED TO GIVE WARNING. Therefore, the installer should in turn advise the consumer to take any and all precautions for his or her safety including, but not limited to, fleeing the premises and calling police or fire department, in order to mitigate the possibilities of harm and/or damage.

NAPCO is not an insurer of either the property or safety of the user's family or employees, and limits its liability for any loss or damage including incidental or consequential damages to NAPCO's original selling price of the product regardless of the cause of such loss or damage.

Some states do not allow limitations on how long an implied warranty lasts or do not allow the exclusion or limitation of incidental or consequential damages, or differentiate in their treatment of limitations of liability for ordinary or gross negligence, so the above limitations or exclusions may not apply to you. This Warranty gives you specific legal rights and you may also have other rights which vary from state to state.

FCC ID: AD82WAYUNIVKF
This device complies with part 15 of the FCC Rules. Operation is subject to the following:
(1) This device may not cause harmful interference.
(2) This device must accept any interference received, including interference that may cause undesired operation.

NAPCO Security Systems, 333 Bayview Avenue, Amityville, NY 11701