FURUNO

OPERATOR'S MANUAL

NAVTEX RECEIVER

MODEL NX-700A/B

FURUNO ELECTRIC CO., LTD.
NISHINOMIYA, JAPAN

IMPORTANT NOTICE

- No part of this manual may be copied or reproduced without written permission.
- If this manual is lost or worn, contact your dealer about replacement.
- The contents of this manual and equipment specifications are subject to change without notice.
- The example screens (or illustrations) shown in this manual may not match the screens you see on your display. The screen you see depends on your system configuration and equipment settings.
- This manual is intended for use by native speakers of English.
- FURUNO will assume no responsibility for the damage caused by improper use or modification of the equipment or claims of loss of profit by a third party.
- Please carefully read and follow the operation and maintenance procedures set forth in this manual.
- Store this manual in a convenient place for further reference.

⚠ SAFETY INSTRUCTIONS

Safety information for the Operator

⚠ WARNING

ELECTRICAL SHOCK HAZARD
Do not open the equipment.

Only qualified personnel should work inside the equipment.

Do not disassemble or modify the equipment.

Fire, electrical shock or serious injury can result.

Immediately turn off the power at the switchboard if the equipment is emitting smoke or fire.

Continued use of the equipment can cause fire or electrical shock. Contact a FURUNO agent for service.

Keep heater away from equipment.

A heater can melt the equipment's power cord, which can cause fire or electrical shock.

Use the proper fuse.

Fuse rating is shown on the equipment. Use of a wrong fuse can result in damage to the equipment.

⚠ CAUTION

A warning label is attached to the equipment. Do not remove the label. If the label is missing or damaged, contact a FURUNO agent or dealer about replacement.

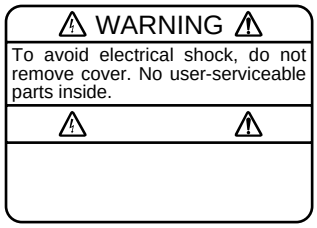

Name: Warning Label (1)
Type: 86-003-1011-1
Code No.: 100-236-231

Safety information for the Installer

⚠ WARNING

Do not open the equipment unless totally familiar with electrical circuits and service manual.

ELECTRICAL SHOCK HAZARD

Only qualified personnel should work inside the equipment.

Turn off the power at the mains switch-board before beginning the installation.

Fire, electrical shock or serious injury can result if the power is left on or is applied while the equipment is being installed.

⚠ CAUTION

Observe the following compass safe distances to prevent deviation of a magnetic compass.

		Standard	Steering
Display unit	NX-700A	1.45 m	0.95 m
	NX-700B	0.30 m	0.30 m
Receiver unit NX-7001		1.15 m	0.75 m

Attach securely protective earth to the ship's body.

The protective earth is required to the power supply to prevent electrical shock.

FORWORD

Congratulations on your choice of the FURUNO NX-700A/B NVTEX Receiver. We are confident that you will enjoy many years of operation with this fine piece of equipment.

For over 50 years, Furuno Electric Company has enjoyed an enviable reputation for quality and reliability throughout the world. Our extensive global network of agents and dealers furthers this dedication to excellence.

The NX-700A/B is just one of the many Furuno developments in the field of marine radio communication.
NX-700A: Display unit w/printer
NX-700B: Display unit w/o printer

This NX-700A/B provides cost-effective price, high sensitivity and simple operation in one compact and light-weight unit. In addition to its fundamental function of receiving NAVTEX broadcasts, this unit can also function as nav data display when connected to navigation equipment.
This unit is designed and constructed to ensure the user many years of trouble-free operation. To obtain full performance from the equipment, however, you should carefully read and follow the recommended procedures for installation, operation and maintenance. No machine can perform its intended functions unless it is installed and maintained properly.

Thank you for considering and purchasing FURUNO equipment.

Features

NAVTEX (Navigational Telex) is a world wide coastal telex broadcasting system. Coastal NAVTEX broadcasting stations with specific ID's transmit Navigational warnings. Meteorological warnings, Search and Rescue (SAR) information and other navigational information for NAVTEX receiver-equipped vessels sailing in coastal waters.

The FURUNO NX-700 NAVTEX receiver receives NAVTEX messages and automatically displays them together with station ID and message category information.

If ship's position data is fed from navigation equipment, the NX-700 automatically decides in which NAVAREA the vessel is navigating, and selects stations. (NAVAREAs are geographical zones defined by the international Maritime Organization.)

-Meets the following standards and regulations
  MSC.148 (77) IMO A.694 (17)
  IEC 61097-6 Ed.2 CDV (2005-02)
  IEC 60945 Ed. 3 and 4
  IEC 61162-1 and 2
  EN 300 065V 1.1.3
  EN 301 011V 1.1.1 (1998-09)
  ITU-R M 540-2
  ITU-R M 625-3

-Receives 518 kHz and another (490 or 4209.5 kHz) at the same time

-5" LCD display

-Prints out the message selected

-Bright 76 x 100 mm, monochrome LCD, 240 x 320 dots with adjustable contrast and brilliance

-Low power consumption

-Displays the NAV data or distance information at the bottom of screen

-Compact, stylish display, receiver and antenna units

TABLE OF CONTENTS

EQUIPMENT LISTS ..... **vi**

SYSTEM CONFIGURATIONS ..... **viii**

1. PRINCIPLE OF NAVTEX SYSTEM **1-1**
1.1 How NAVTEX Works 1-1
1.2 NAVTEX System Operation 1-1
1.3 Message Format 1-2
1.4 NAVTEX Station Map 1-3
1.5 NAVTEX Station List 1-4

2. OPERATION **2-1**
2.1 Operating Controls 2-1
2.2 Turn the Unit On/Off 2-1
2.3 Adjusting LCD Brilliance 2-2
2.4 Confirming the New Message 2-2
2.5 Sample Messages 2-3
2.6 Choosing Up Navtex Station Receive Mode 2-4
2.7 Choosing the Local Frequency 2-5
2.8 Editing the Setting for Frequencies 2-5
2.9 Switching the Frequency to Display 2-7
2.10 Alarm Messages 2-7
2.11 Processing Messages 2-8
2.12 Printing Messages 2-9
2.13 Editing the NAVTEX Station List 2-11
2.14 Icons 2-14
2.15 Messages List 2-15
2.16 Other Functions 2-16

3. MAINTENANCE & TROUBLESHOOTING **3-1**
3.1 Maintenance 3-1
3.2 Replacement of Fuse, Battery and Thermal Paper 3-2
3.3 Troubleshooting 3-4
3.4 Diagnostics 3-5
3.5 Restoring All Default Settings 3-6

4. INSTALLATION **4-1**
4.1 Display Unit 4-1
4.2 Receiver Unit 4-3
4.3 Antenna Unit 4-4
4.4 Printer (NX-700B only) 4-4
4.5 Wiring 4-5
4.6 Setting of Printer 4-9
4.7 Interfacing 4-10

MENU TREE AP-1

PACKING LISTS A-1

DRAWINGS D-1

INTERCONNECTION DIAGRAM S-1

SPECIFICATIONS SP-1

EQUIPMENT LISTS

Standard Supply

Name	Type	Code No.	Qty	Remarks
Display Unit	NX-700A	-	1	w/printer
	NX-700B	-		w/o printer
Receiver Unit	NX-7001	-	1	
Antenna Unit	NX-7H	-	1	
Installation Materials	CP08-01810	000-040-122	1	10 m cable, CP08-01811
	CP08-01820	000-040-123		20 m cable, CP08-01811*
	CP08-01870	000-040-350		30 m cable, CP08-01811*
	CP08-01880	000-040-362		40 m cable, CP08-01811*
	CP08-01890	000-040-363		50 m cable, CP08-01811*
	CP08-01860	000-040-349	1	DSUB25P cable, between Display and Receiver Units
	CP08-01863*	004-514-530	1	For Antenna Unit w/o antenna cable
	CP08-01864*	004-514-540		For Antenna Unit w/ antenna cable.
	CP08-01861*	004-514-350	1	For Display Unit
Spare Parts	SP08-02000*	000-040-344	1	For NX-700A
	SP08-02101*	004-514-370	1	Fuse for Receiver Unit

*: See the back of this manual.

Optional Supply

Name	Type	Code No.	Qty	Remarks
Thermal Paper	TP058-30CL	000-154-047	1 set	For NX-700A, 10 rolls
Flush Mount Kit	OP08-19	004-514-810	1	For NX-700A
	OP08-20	004-514-820	1	For NX-700B
AC-DC Power	PR-240-CE	000-053-373	1	
Extension Cable	OP04-2	000-041-174	1	10 m, w/M-A-JJ connector
		000-041-175	1	20 m, w/M-A-JJ connector
		000-041-176	1	30 m, w/M-A-JJ connector
		000-041-177	1	40 m, w/M-A-JJ connector
		000-041-178	1	50 m, w/M-A-JJ connector
	OP08-12	005-948-250	1	10 m
		005-948-260	1	20 m
		005-948-270	1	30 m
		005-948-280	1	40 m
		005-948-290	1	50 m
Coaxial Cable	RG-10/U-Y	000-563-048	1	30 m
		000-126-000	1	40 m
		000-126-001	1	50 m
Cable Assy	DSUB25P-DSUB25P	000-152-698	1	3 m, For 24 VDC
		000-152-699	1	5 m
		000-152-700	1	10 m
		000-152-701	1	15 m
Right Angle Mounting Base	No.13-QA330	000-803-239	1	For antenna unit NX-7H
L-Angle Mounting Base	No.13-QA310	000-803-240	1	
Handrail Mounting Base	No.13-RC5160	000-806-114	1	
Mast Mounting Kit	CP20-01111	004-365-780	1	
Display Unit	NX-700A	-	1	
	NX-700B	-		

SYSTEM CONFIGURATIONS

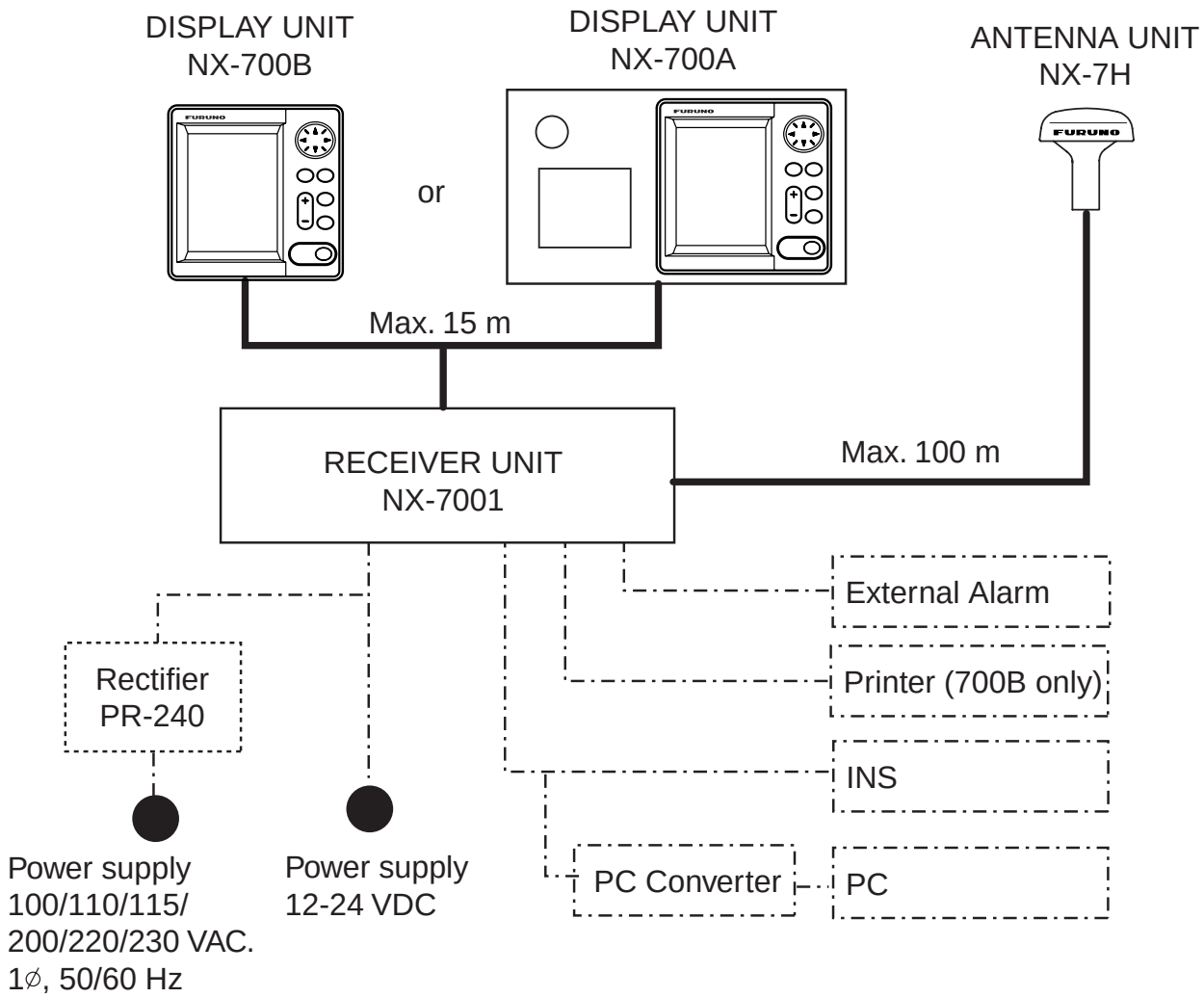

: Standard

: Option

: User supply

Environmental Category

Antenna unit	To be installed in an exposed area
Display unit Receiver unit	To be installed in a protected area

1. PRINCIPLE OF NAVTEX SYSTEM

1.1 How NAVTEX Works

There are many types of navigational and meteorological information available on radio, such as NAVAREA, HYDROPAC, etc. However, these systems rely heavily upon the operator's experience and skill in tuning the radio and interpreting messages. In addition, constant monitoring to pick up wanted information among a vast volume of messages is not practical with a limited radio staff.

To provide all mariners with up-to-the-minute information automatically, the NAVTEX system was developed.

NAVTEX is an acronym meaning Navigational Telex, and as its name shows, it is a kind of narrow band radio teletype system for sending (by frequency shift keying) text messages expressed in a 7-unit code. The difference is that a NAVTEX transmitter transmits nine control characters (header code) ahead of the main message, so that the receiver can identify the station, message type and serial number automatically.

1.2 NAVTEX System Operation

For navigation purposes, the world is divided into 16 areas as shown in the figure below. Each Navtex station has an identification code, from “A” to “Z”. The frequency assigned to Navtex are 518 kHz and another (490 or 4209.5 kHz), and many station exist in the same service coverage.

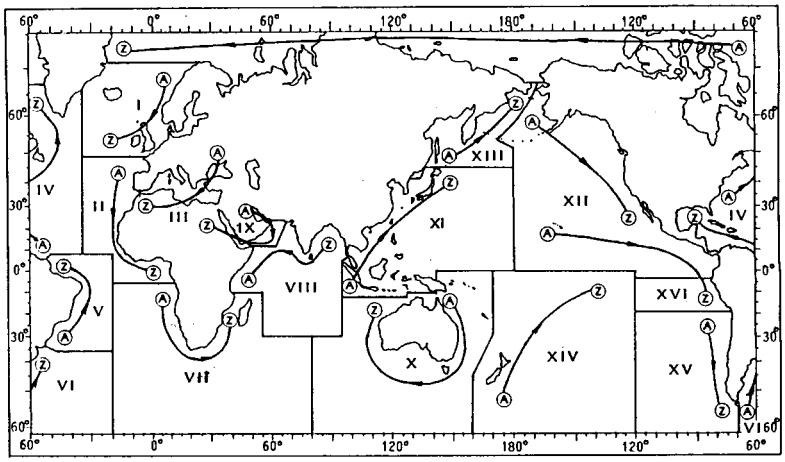

If the stations were to transmit without any rule, the system would collapse due to mutual interference. To avoid this problem, the following rules apply.

- The transmission schedule is determined so that two or more stations having a common service area may not overlap in time.
- Each station transmits with minimum required power to cover its service area (200 nautical miles nominal).

1.3 Message Format

For automatic identification of messages, each message starts with nine control characters, called “Header codes”.
The first five characters are always “ZCZC_“ and common to all messages. This part is used for message synchronization. The latter four characters are designed as b1, b2, b3 and b4 indicate origin, category and serial number of the message.
Character B1 is the identification letter of the Navtex station “A” thru “Z”.
Character B2 indicates the type of message. “A” thru “Z”, as listed below.
Character B3 and B4 indicate the serial number of the message. The serial numbers are counted up from “01” to “99”, and starts from “01” again. Number “00” is specially reserved for important emergency messages, such as a search and rescue (SAR) message.

The end of each message is indicated by “NNNN” (four successive N’s).
General message format is summarized below.

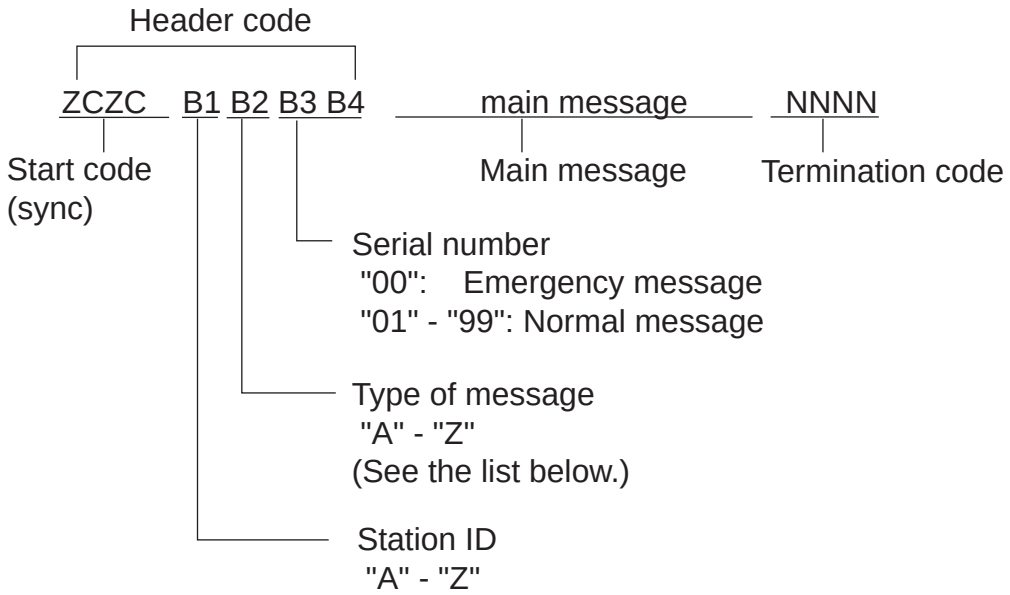

[Type of message (category)]

A:	Navigational warning	I:	OMEGA message
B:	Meteorological warning	J:	Differential OMEGA message
C:	Ice report	K:	Other electronic navigational aid system message
D:	Search and rescue information/piracy and armed robbery	L:	Navigational warning (additional)
E:	Meteorological forecast	M to U:	Reserve-presently not used
F:	Pilot message	V:	Notice to Fishermen (U. S. only)
G:	DECCA message	W to Y:	Reserve-presently not used
H:	LORAN-C message	Z:	QRU (no message on hand)

1.4 NAVTEX Station Map

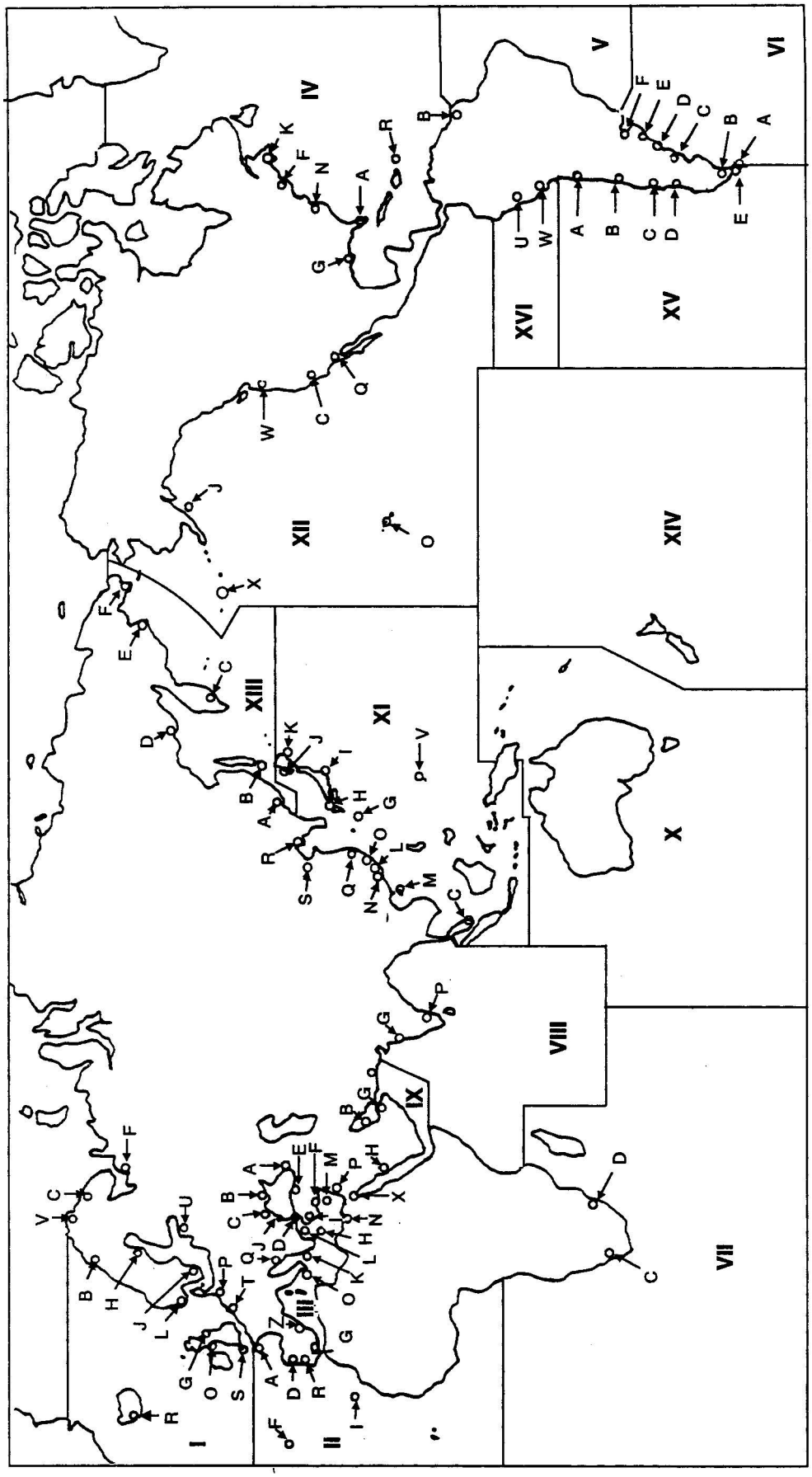

1.5 NAVTEX Station List

NAV area	Country	Station	Latitude	Longitude	Frequency (kHz)	Area (nm)	Station ID	Broadcast schedule (UTC)
I	Belgium	Oostende	51 11 N	02 48 E	518	55	T	0310, 0710, 1110, 1510, 1910, 2310
	Estonia	Tallinn	59 30 N	24 30 E	518	250	U	0320, 0720, 1120, 1520, 1920, 2320
	Iceland	Reykjavik Radio	64 05 N	21 51 W	518	550	R	0250, 0650, 1050, 1450, 1850, 2250
					490	550	R	0318, 0718, 1118, 1518, 1918, 2318
	Ireland	Valentia	51 27 N	09 49 W	518	400	W	0340, 0740, 1140, 1540, 1940, 2340
		Malin Head	55 22 N	07 21 W	518	400	Q	0240, 0640, 1040, 1440, 1840, 2240
	France	Niton	50 35 N	01 18 W	518	270	K	0140, 0540, 0940, 1340, 1740, 2140
	Netherlands	Den Helder	52 06 N	04 15 E	518	110	P	0230, 0630, 1030, 1430, 1830, 2230
	Norway	Bodo Radio	67 16 N	14 23 E	518	450	B	0010, 0410, 0810, 1210, 1610, 2010
		Rogaland Radio	58 48 N	05 34 E	518	450	L	0150, 0550, 0950, 1350, 1750, 2150
		Vardoe Radio	70 22 N	31 06 E	518	450	V	0330, 0730, 1130, 1530, 1930, 2330
		Svalbard	78 04 N	13 38 E	518	450	A	0000, 0400, 0800, 1200, 1600, 2000
		Orlandet	63 40 N	09 33 E	518	450	N	0210, 0610, 1010, 1410, 1810, 2210
	Sweden	Bjuroklubb	64 28 N	21 36 E	518	300	H	0110, 0510, 0910, 1310, 1710, 2110
		Gislovshammar	55 29 N	14 19 E	518	300	J	0130, 0530, 0930, 1330, 1730, 2130
		Grimeton	57 06 N	12 23 E	518	300	D	0030, 0430, 0830, 1230, 1630, 2030
	United Kingdom	Cullercoats	55 02 N	01 26 W	518	270	G	0100, 0500, 0900, 1300, 1700, 2100
					490	270	U	0320, 0720, 1120, 1520, 1920, 2320
		Portpatrick	54 51 N	05 07 W	518	270	O	0220, 0620, 1020, 1420, 1820, 2220
					490	270	C	0020, 0420, 0820, 1220, 1620, 2020
		Niton	50 35 N	01 18 W	518	270	E	0040, 0440, 0840, 1240, 1640, 2040
					490	270	I	0120, 0520, 0920, 1320, 1720, 2120
		Oostende	51 11 N	02 48 E	518	150	M	0200, 0600, 1000, 1400, 1800, 2200
II	France	Cross Corsen	48 28 N	05 03 W	518	300	A	0000, 0400, 0800, 1200, 1600, 2000
					490	300	E	0040, 0440, 0840, 1240, 1640, 2040
		Niton	50 35 N	01 18 W	490	270	T	0310, 0710, 1110, 1510, 1910, 2310
	Portugal	Horta	38 32 N	28 38 W	518	640	F	0050, 0450, 0850, 1250, 1650, 2050
		Monsanto	38 44 N	09 11 W	518	530	R	0250, 0650, 1050, 1450, 1850, 2250
					490	530	G	0100, 0500, 0900, 1300, 1700, 2100
	Spain	Coruna	43 21 N	08 27 W	518	400	D	0030, 0430, 0830, 1230, 1630, 2030
		Tarifa	36 01 N	05 34 W	518	400	G	0100, 0500, 0900, 1300, 1700, 2100
		Las Palmas	28 10 N	15 25 W	518	400	I	0120, 0520, 0920, 1320, 1720, 2120

(Continued on next page)

NAV area	Country	Station	Latitude	Longitude	Frequency (kHz)	Area (nm)	Station ID	Broadcast schedule (UTC)
III	Bulgaria	Varna	43 04 N	27 46 E	518	350	J	0130, 0530, 0930, 1330, 1730, 2130
	Croatia	Split radio	43 30 N	16 29 E	518	85	Q	0240, 0640, 1040, 1440, 1840, 2240
	Cyprus	Cypradio	35 03 N	33 17 E	518	200	M	0200, 0600, 1000, 1400, 1800, 2200
	Egypt	Alexandria	31 12 N	29 52 E	518	350	N	0210, 0610, 1010, 1410, 1810, 2210
		Serapeum	30 28 N	32 22 E	4209.5		X	0750, 1150
	France	Toulon	43 06 N	05 59 E	518	250	W	0340, 0740, 1340, 1540, 1940, 2340
					490	250	S	0300, 0700, 1100, 1500, 1900, 2300
	Greece	Iraklion	35 20 N	25 07 E	518	280	H	0110, 0510, 0910, 1310, 1710, 2110
		Kerkyra	39 37 N	19 55 E	518	280	K	0140, 0540, 0940, 1340, 1740, 2140
		Limnos	39 52 N	25 04 E	518	280	L	0150, 0550, 0950, 1350, 1750, 2150
	Israel	Haifa	32 49 N	35 00 E	518	200	P	0020, 0420, 0820, 1220, 1620, 2020
	Italy	Roma	41 48 N	12 31 E	518	320	R	0250, 0650, 1050, 1450, 1850, 2250
		Augusta	37 14 N	15 14 E	518	320	V	0330, 0730, 1130, 1530, 1930, 2330
		Cagliari	39 14 N	09 14 E	518	320	T	0310, 0710, 1110, 1510, 1910, 2310
		Trieste	45 41 N	13 46 E	518	320	U	0320, 0720, 1120, 1520, 1920, 2320
	Malta	Malta	35 49 N	14 32 E	518	400	O	0220, 0620, 1020, 1420, 1820, 2220
	Russian Federation	Novorossiysk	44 42 N	37 44 E	518	300	A	0300, 0700, 1100, 1500, 1900, 2300
	Spain	Cabo de la Nao	38 43 N	00 09 E	518	300	X	0350, 0750, 1150, 1550, 1950, 2350
	Turkey	Istanbul	41 04 N	28 57 E	518	300	D	0030, 0430, 0830, 1230, 1630, 2030
		Samsun	41 17 N	36 20 E	518	300	E	0040, 0440, 0840, 1240, 1640, 2040
		Antalya	36 53 N	30 42 E	518	300	F	0050, 0450, 0850, 1250, 1650, 2050
		Izmir	38 22 N	26 36 E	518	300	I	0120, 0520, 0920, 1320, 1720, 2120
	Ukraine	Mariupol	47 06 N	37 33 E	518	280	B	0100, 0500, 0900, 1300, 1700, 2100
		Odessa	46 29 N	30 44 E	518	280	C	0230, 0630, 1030, 1430, 1830, 2230
IV	Bermuda (UK)	Bermuda	32 23 N	64 41 W	518	280	B	0010, 0410, 0810, 1210, 1610, 2010
	Canada	Riviere-au-Renard	50 11 N	66 07 W	518	300	C D	0020, 0420, 0820, 1220, 1620, 2020 0035, 0435, 0835, 1235, 1635, 2035
		Wiarton	44 20 N	81 10 W	518	300	H	0110, 0510, 0910, 1310, 1710, 2110
		St. Johns	47 30 N	52 40 W	518	300	O	0220, 0620, 1020, 1420, 1820, 2220
		Thunder Bay	48 25 N	89 20 W	518	300	P	0230, 0630, 1030, 1430, 1830, 2230
		Sydney, NS	46 10 N	60 00 W	518	300	Q J	0240, 0640, 1040, 1440, 1840, 2240 0255, 0655, 1055, 1455, 1855, 2255
		Yarmouth	43 45 N	66 10 W	518	300	U V	0320, 0720, 1120, 1520, 1920, 2320 0335, 0735, 1135, 1535, 1935, 2335

(Continued on next page)

NAV area	Country	Station	Latitude	Longitude	Frequency (kHz)	Area (nm)	Station ID	Broadcast schedule (UTC)
IV	Canada	Labrador	53 42 N	57 01 W	518	300	X	0350, 0750, 1150, 1550, 1950, 2350
		Iqaluit, NU	63 43 N	68 33 W	518	300	T	0310, 0710, 1110, 1510, 1910, 2310
					490	300	S	0300, 0700, 1100, 1500, 1900, 2300
	United States	Miami	25 37 N	80 23 W	518	240	A	0000, 0400, 0800, 1200, 1600, 2000
		Boston	41 43 N	70 30 W	518	200	F	0445, 0845, 1245, 1645, 2045, 0045
		New Orleans	29 53 N	89 57 W	518	200	G	0300, 0700, 1100, 1500, 1900, 2300
		Portsmouth	36 43 N	76 00 W	518	280	N	0130, 0530, 0930, 1330, 1730, 2130
		Isabella	18 28 N	67 04 W	518	200	R	0200, 0600, 1000, 1400, 1800, 2200
		Savannah, GA	32 08 N	81 42 W	518	200	E	0040, 0440, 0840, 1240, 1640, 2040
	Netherlands Antilles	Curacao	12 10 N	68 52 W	518	400	H	0110, 0510, 0910, 1310, 1710, 2110
V	なし							
VI	Argentina	Ushaia	54 48 S	68 18 W	518	280	M	0200, 0600, 1000, 1400, 1800, 2200
		Rio Gallegos	51 37 S	65 03 W	518	280	N	0210, 0610, 1010, 1410, 1810, 2210
		Comodoro Rivadavia	45 51 S	67 25 W	518	280	O	0220, 0620, 1020, 1420, 1820, 2220
		Bahia Blanca	38 43 S	62 06 W	518	280	P	0230, 0630, 1030, 1430, 1830, 2230
		Mar del Plata	38 03 S	57 32 W	518	280	Q	0240, 0640, 1040, 1440, 1840, 2240
		Buenos Aires	34 36 S	58 22 W	518	560	R	0250, 0650, 1050, 1450, 1850, 2250
	Uruguay	La Paloma	34 40 S	54 09 W	518	280	F	0050, 0450, 0850, 1250, 1650, 2050
					490	280	A	0000, 0400, 0800, 1200, 1600, 2000
VII	Namibia	Walvis Bay	23 03 S	14 37 E	518	378	B	0010, 0410, 0810, 1210, 1610, 2010
	South Africa	Cape Town	33 40 S	18 43 E	518	500	C	0020, 0420, 0820, 1220, 1620, 2020
		Port Elizabeth	34 02 S	25 33 E	518	500	I	0120, 0520, 0920, 1320, 1720, 2120
		Durban	30 00 S	31 30 E	518	500	O	0220, 0620, 1020, 1420, 1820, 2220
VIII	India	Mumbay	19 05 N	72 50 E	518	250	G	0100, 0500, 0900, 1300, 1700, 2100
		Madras	13 08 N	80 10 E	518		P	0230, 0630, 1030, 1430, 1830, 2230
	Mauritius	Mauritius Radio	20 10 S	57 28 E	518	400	C	0020, 0420, 0820, 1220, 1620, 2020
IX	Bahrain	Hamala	26 09 N	50 28 E	518	300	B	0010, 0410, 0810, 1210, 1610, 2010
	Egypt	Serapeum	30 28 N	32 22 E	518	200	X	0350, 0750, 1150, 1550, 1950, 2350
					4209.5		X	0750, 1150
		Kosseir	26 06 N	34 17 E	518	400	V	0330, 0730, 1130, 1530, 1930, 2330
	Iran	Bushehr	28 59 N	50 50 E	518	300	A	0000, 0400, 0800, 1200, 1600, 2000
		Bandar Abbas	27 07 N	56 04 E	518	300	F	0050, 0450, 0850, 1250, 1650, 2050

(Continued on next page)

NAV area	Country	Station	Latitude	Longitude	Frequency (kHz)	Area (nm)	Station ID	Broadcast schedule (UTC)
IX	Saudi Arabia	Jeddah	21 23 N	39 10 E	518	390	H	0705, 1305, 1905
	Oman	Muscat	23 36 N	58 30 E	518	270	M	0200, 0600, 1000, 1400, 1800, 2200
	Pakistan	Karachi	24 51 N	67 03 E	518	400	P	0230, 0630, 1030, 1430, 1830, 2230
X	なし							
XI	China	Sanya	18 14 N	109 30 E	518	250	M	0200, 0600, 1000, 1400, 2200
		Guangzhou	23 08 N	113 32 E	518	250	N	0210, 0610, 1010, 1410, 2210
		Fuzhou	26 01 N	119 18 E	518	250	O	0220, 0620, 1020, 1420, 2220
		Shanghai	31 08 N	121 33 E	518	250	Q	0240, 0640, 1040, 1440, 2240
		Dalian	38 52 N	121 31 E	518	250	R	0250, 0650, 1050, 1450, 2250
	Indonesia	Jayapura	02 31 S	140 43 E	518	300	A	0000, 0400, 0800, 1200, 1600, 2000
		Ambon	03 42 S	128 12 E	518	300	B	0010, 0410, 0810, 1210, 1610, 2010
		Makassar	05 06 S	119 26 E	518	300	D	0030, 0430, 0830, 1230, 1830, 2030
		Jakarta	06 06 S	106 54 E	518	300	E	0040, 0440, 0840, 1240, 1640, 2040
	Japan	Otaru	43 19 N	140 27 E	518	400	J	0130, 0530, 0930, 1330, 1730, 2130
		Kushiro	42 57 N	144 36 E	518	400	K	0140, 0540, 0940, 1340, 1740, 2140
		Yokohama	35 14 N	139 55 E	518	400	I	0120, 0520, 0920, 1320, 1720, 2120
		Moji	34 01 N	130 56 E	518	400	H	0110, 0510, 0910, 1310, 1710, 2110
		Naha	26 05 N	127 40 E	518	400	G	0100, 0500, 0900, 1300, 1700, 2100
	Korea, Republic of	Chukpyong	37 03 N	129 26 E	518	200	V	0330, 0730, 1130, 1530, 1930, 2330
					490	200	J	0130, 0530, 0930, 1330, 1730, 2130
		Pyongsan	35 36 N	126 29 E	518	200	W	0340, 0740, 1340, 1540, 1940, 2340
					490	200	K	0140, 0540, 0940, 1340, 1740, 2140
	Malaysia	Penang	05 26 N	100 24 E	518	350	U	0320, 0720, 1120, 1520, 1920, 2320
		Miri	04 28 N	114 01 E	518	350	T	0310, 0710, 1110, 1510, 1910, 2310
		Sandakan	05 54 N	118 00 E	518	350	S	0300, 0700, 1100, 1500, 1900, 2300
	Singapore	Singapore	01 25 N	103 52 E	518	400	C	0020-0030, 0420-0430, 0820-0830, 1220-1230, 1620-1630, 2020-2030
	Thailand	Bangkok Radio	13 43 N	100 34 E	518	200	F	0050, 0450, 0850, 1250
	United States	Guam	13 29 N	144 50 E	518	100	V	0100, 0500, 0900, 1300, 1700, 2100

(Continued on next page)

NAV area	Country	Station	Latitude	Longitude	Frequency (kHz)	Area (nm)	Station ID	Broadcast schedule (UTC)
XI	Vietnam	Ho Chi Minh City	10 47 N	106 40 E	518	400	X	0350, 0750, 1150, 1550, 1950, 2350
		Haiphong	20 44 N	106 44 E	490	400	W	0340, 1540
					4209.5	400	W	0230, 0630, 1030, 1430, 1830, 2230
		Danang	16 05 N	108 13 E	518	400	K	0140, 0540, 0940, 1340, 1740, 2140
	Taiwan	Kaohsiung	22 29 N	120 25 E	518	400	P	0230, 0630, 1030, 1430, 1830, 2230
	Associate Member of IMO	Hong Kong	22 13 N	114 15 E	518	400	L	0150, 0550, 0950, 1350, 1750, 2150
XII	Canada	Prince Rupert	54 20 N	130 20 W	518	300	D	0030, 0430, 0830, 1230, 1630, 2030
		Tofino	48 55 N	125 35 W	518	300	H	0110, 0510, 0910, 1310, 1710, 2110
	United States	San Francisco	37 55 N	122 44 W	518	350	C	0400, 0800, 1200, 1600, 2000, 2400
		Kodiak	57 46 N	152 34 W	518	200	J	0300, 0700, 1100, 1500, 1900, 2300
		Honolulu	21 22 N	158 09 W	518	350	O	0040, 0440, 0840, 1240, 1640, 2040
		Cambria	35 31 N	121 03 W	518	350	Q	0445, 0845, 1245, 1645, 2045, 0045
		Astoria	46 10 N	123 49 W	518	216	W	0130, 0530, 0930, 1330, 1730, 2130
XIII	Russian Federation	Kholmsk	47 02 N	142 03 E	518	300	B	0010, 0410, 0810, 1210, 1610, 2010
		Murmansk	68 46 N	32 58 E	518	300	C	0020, 0420, 0820, 1220, 1620, 2020
		Arkhangelsk	64 51 N	40 17 E	518	300	F	0050, 0450, 0850, 1250, 1650, 2050
		Astrakhan	45 47 N	47 33 E	518	250	W	0340, 0740, 1140, 1540, 1940, 2340
XIV	なし							
XV	Chile	Antofagasta	23 40 S	70 25 W	518	300	A H	0400, 1200, 2000 0000, 0800, 1600
		Valparaiso	32 48 S	71 29 W	518	300	B I	0410, 1210, 2010 0010, 0810, 1610
		Talcahuano	36 42 S	73 06 W	518	300	C J	0420, 1220, 2020 0020, 0820, 1620
		Puerto Montt	41 30 S	72 58 W	518	300	D K	0430, 1230, 2030 0030, 0830, 1630
		Punta Arenas	53 09 S	70 58 W	518	300	E L	0440, 1240, 2040 0040, 0840, 1640
		Isla de Pascua	27 09 S	109 25 W	518	300	F G	0450, 1250, 2050 0050, 0850, 1650
XVI	Peru	Paita	05 05 S	81 07 W	518	200	S	0300, 0700, 1100, 1500, 1900, 2300
		Callao	12 03 S	77 09 W	518	200	U	0320, 0720, 1120, 1520, 1920, 2320
		Mollendo	17 01 S	72 01 W	518	200	W	0340, 0740, 1140, 1540, 1940, 2340

Note: The list shows the stations listed at Longwave Navtex Broadcasts (Oct. 2004).

2. OPERATION

2.1 Operating Controls

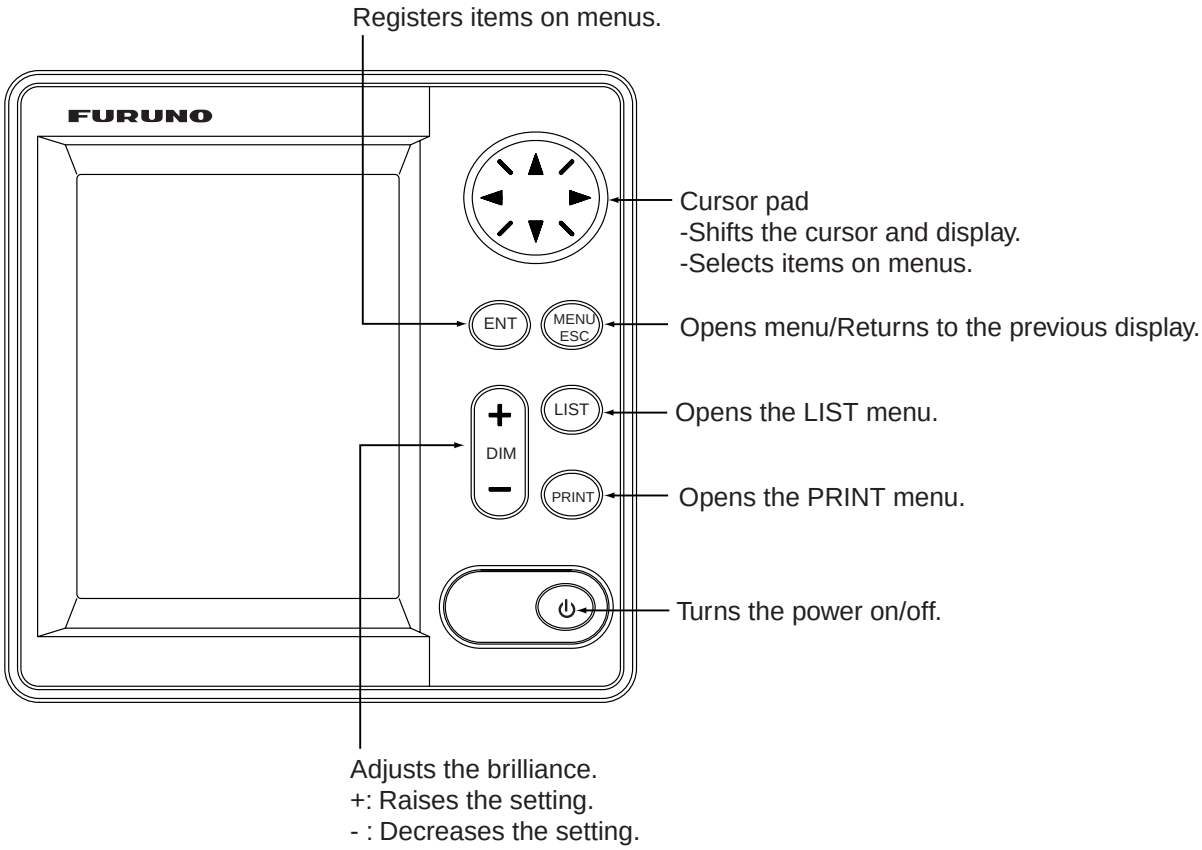

Display unit, front view

2.2 Turning the Unit On/Off

Press the ⏻ key to turn the unit on. A beep sounds and the equipment shows the start up display, where the ROM and ROM are checked for proper operation and the program no. is displayed. The results of the check are shown as OK or NG (No Good).

When the results are OK, the list display is shown after five seconds after completion of the check, with frequency last used before turning the power off.

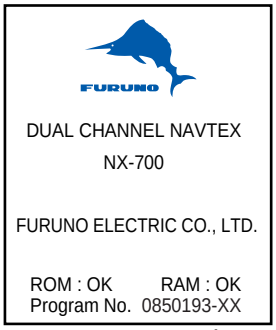

XX: Program version No.

To turn the power off, press the ⏻ key again.

Note: If NG appears for any test, try to press any key to go to the next stage. The equipment, however, may not be operated properly. Contact your dealer if the problem persists.

2.3 Adjusting LCD Dimmer

You can adjust LCD brilliance with the **+ DIM –** key. The adjustment range is 0 (dark) to 9 (bright).
+: Raises the dimmer.
-: Decreases the dimmer.

2.4 Confirming the New Message

When you receive a new message, do one of the following depending on message received.

SAR (Search and Rescue) message

1. When receiving an SAR message is received, the audible alert sounds and details for the SAR message appear.

Icon for SAR message

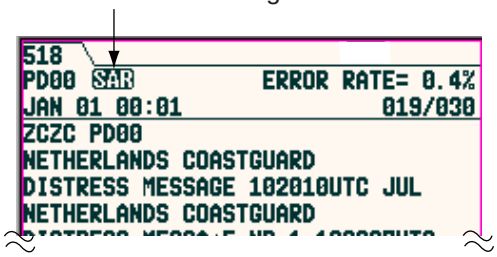

2. Press any key other than ⏻ key to silence the alarm.

Other messages

1. When a message other than an SAR message is received, the display shows one of the following windows.

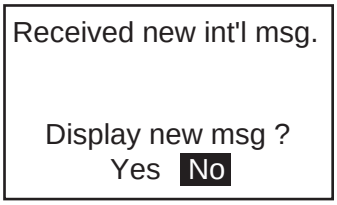

International message

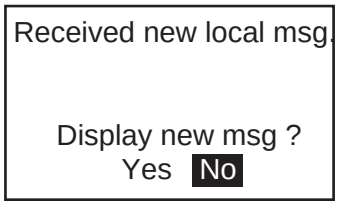

Local message

2. If you want to read the message immediately, press ◄ to choose “Yes” and then press the **ENT** key. to display the message

   To read the message later, choose “No” and then press the **ENT** key to close the window.

Note: In the default setting, all received messages are printed out automatically. For further details, see paragraph 2-12.

2.5 Sample Messages

Press ▲▼ on the cursor pad to choose a message, and then press the **ENT** key to show the detailed information for that message. These displays can be switched by pressing the **ENT** key.

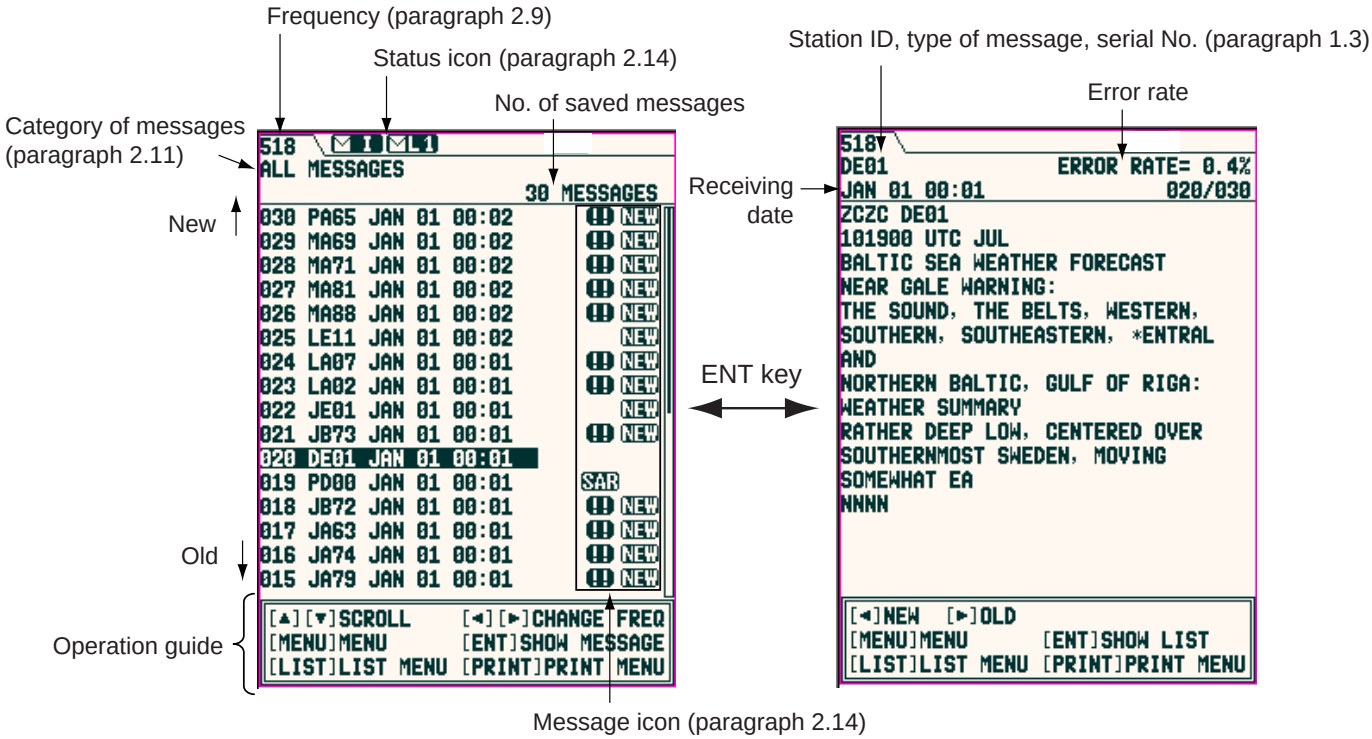

Message list *Detailed message*

Note 1: The operation guide at the bottom of screen shows the functions of the keys available for use with the current screen.

Note 2: The character size can be changed. For detail, see page 2-17.

Key	Display mode	Function
▲▼	List	Scrolls the list.
	Detailed	Scrolls the message.
◄►	List	Changes the frequency.
	Detailed	Shows the newer (◄) or older (►) message.
MENU	List	Shows the main menu.
	Detailed	
ENT	List	Shows the detailed message selected.
	Detailed	Shows the message list.
LIST	List	Shows the list window. (P2-6)
	Detailed	
PRINT	List	Shows the print window. (P2-7)
	Detailed	

2.6 Choosing Up Navtex Station Receive Mode

The NAVTEX menu allows you to select what station to receive, automatically, manually or from the INS connected. The Auto mode requires navigation data, and stations are automatically selected according to the distance between own ship and NAVTEX stations. If navigation data is not input, all stations are selected. The manual mode lets you freely stations to receive. The INS mode allows you to set the station, message and local channel from the Integrated Navigation System connected.

1. Press the **MENU/ESC** key to show the main menu.

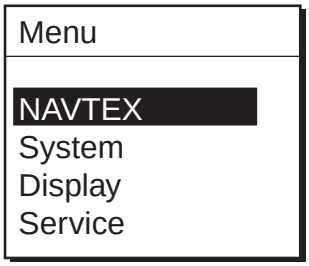

Main menu

2. Press ▲ or ▼ to choose NAVTEX.
3. Press the **ENT** key or ► to open the NAVTEX menu.

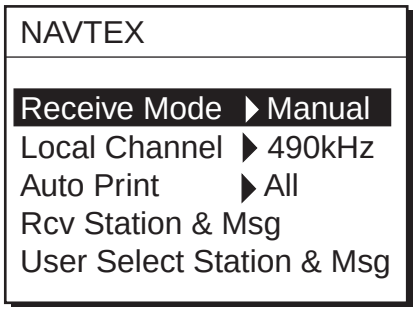

NAVTEX menu

4. Press ▲ or ▼ to choose Receive Mode, and then press the **ENT** key or ► to show the receive mode options.

Receive mode options

5. Press ▲ or ▼ to choose INS, Auto or Manual as appropriate, and then press the **ENT** key.
6. Press the **MENU/ESC** key several times to close the menu.

2.7 Choosing the Local Frequency

You can choose 490 kHz or 4209.5 kHz as the local frequency. This function is only available for the Auto and Manual modes. (See paragraph 2.6.)

1. Press the **MENU/ESC** key to show the main menu.
2. Press ▲ or ▼ to choose NAVTEX, and then press the **ENT** key or ►.
3. Press ▲ or ▼ to choose Local Channel, and then press the **ENT** key or ► to show the local channel options.

Local channel options

4. Press ▲ or ▼ to choose the frequency 490 kHz or 4209.5 kHz, and then press the **ENT** key.
5. Press the **MENU/ESC** key several times to close the menu.

2.8 Editing the Settings for Frequencies

Stations and messages for receiving/displaying on each frequency can be edited as below.

Rcv Station & Msg

(Station)
You can receive messages by station when Manual is chosen as the Receive Mode on the NAVTEX menu.

(Message)
You can choose the messages to receive when Manual or Auto is chosen as the Receive Mode on the NAVTEX menu. Note that A/B/D/L cannot be rejected.

User Select Station & Msg

(Station)
Choose the station to display on User Selected Messages, which is shown when the **LIST** key is pressed.

(Message)
Choose the type of message to display on User Selected Messages, which is shown when the **LIST** key is pressed.

Note 1: For messages, the alarm message is displayed always.
Note 2: When User Select is chosen as the Auto Print on NAVTEX menu, only the messages chosen here are printed. (See paragraph 2-12.)

1. Press the **MENU/ESC** key to show the main menu.
2. Press ▲ or ▼ to choose NAVTEX, and then press the **ENT** key or ►.

3. Press ▲ or ▼ to choose Rcv Station & Msg or User Select Station & Msg.
4. Press the **ENT** key to open the appropriate editing window. (Below is the Rcv Station Msg editing window.)

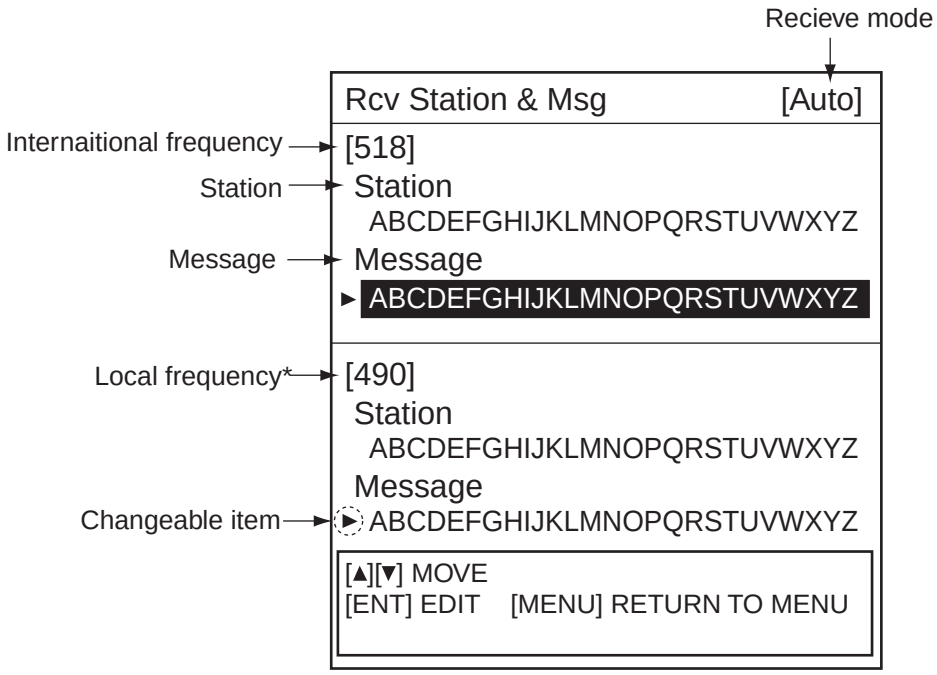

*: Local channel selected at Paragraph 2.7.

Edit window (ex. Rcv Station & Msg)

5. Press ▲ or ▼ to choose the item to edit, and then press the **ENT** key to show the alphabet selection window.

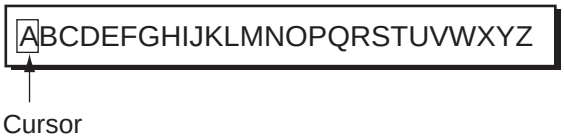

6. Press ◄ or ► to choose the alphabet desired, and then press ▲ or ▼ to choose it as is or "-" (disable).
7. Press the **ENT** key
8. Repeat steps 5 through 7 to complete.
9. Press the **MENU/ESC** key to close the window.

2.9 Switching the Frequency to Display

With the message list shown, you can switch the frequency to 518 kHz or 490 (or 4209) kHz by pressing ◄ or ► key.

Switching the frequency for display

2.10 Alarm Messages

The sequence of events when an alarm message is received is as shown below.

When receiving SAR (Search and Rescue) message:
The audible alarm beep sounds, and the alarm output signal is set to ON. The SAR message is shown on the display immediately after receiving. Note that the setting of the LIST window changes to All Messages automatically when receiving an SAR message. (See paragraph 2.11.)

When receiving WARNING message (A/B/L):
When the Warn Msg Alm on System menu is set to On, the audible alarm sounds and the alarm output signal is ON. The message received appears.

Silencing audible alarm

Press any key (except ⏻ key).

2.11 Processing Messages

Choosing messages to display

You can choose which category of messages to display: All, Alarm, User Selected and Good messages.

1. With the message list or detailed message shown, press the **LIST** key to show the list options.

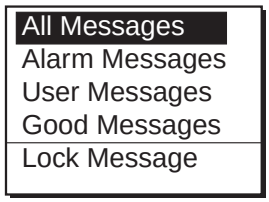

List options

2. Press ▲ or ▼ to choose the item.

   All Messages: Shows all messages received.

   Alarm Messages: Shows only SAR/WARNING messages.

   User Selected Messages: Shows messages arranged at User Select Station & Msg on NAVTEX menu.

   Good Messages: Shows messages whose error rate is less than 4%.

3. Press the **ENT** key to close the window.

   The list chosen at step 2 appears.

Note: When the following messages appear, set the List window to All Messages to show.

Urgent message:

"Message not chosen for display received; it is a int'l (or local) 00 message. Choose "All Message" (LIST menu) to display."

Normal message:

Int'l (or local) message not chosen for display received. Choose "All Message" (LIST menu) to display."

Protecting message from deleting

Messages are automatically deleted from the memory under the following conditions.
-66 hours passed from the moment when received.
-Older than No. 200

To prevent a message from being deleted, choose the message and then select Lock Message from the list window. The protect icon (🔒) appears next to the message selected. To unlock a message, choose it and then select Unlock Message in the same window. (The protect icon disappears.)

Note 1: When you unlock a message which was received 66 hours ago or a message that is older than No. 200, it will be deleted promptly when unlocked.
Note 2: Maximum 50 messages for International and local (or 25% of each memory) can be protected.

2.12 Printing Messages

Received messages can be printed automatically or manually, from the built-in printer (NX-700A) or external printer (NX-700B).

Printing all messages displayed

Displayed messages can be arranged on the LIST menu described in paragraph 2.11.

1. Press the **PRINT** key when all messages are shown on display to show the PRINT options.

Print options

2. Press ▲ or ▼ to choose “Print”.
3. Press the **ENT** key to print.

Note: When a message is received while printing some messages, the new one cannot be printed.

Printing each message text

1. Press ▲ or ▼ to choose the desired message from the list.
2. Press the **ENT** key to show the detailed information.
3. Press the **PRINT** key.
4. Press ▲or ▼ to choose “Print” from the window.
5. Press the **ENT** key to print.

Printing messages automatically

1. Press the **MENU/ESC** key to open the main menu.
2. Press ▲ or ▼ to choose NAVTEX, and then press the **ENT** key to show the NAVTEX menu.
3. Press ▲ or ▼ to choose Auto Print, and then press the **ENT** key to open the auto print options.

Auto print options

4. Press ▲ or ▼ to choose All, User Select or Off as appropriate.

   All: Prints all messages.

   User Select: Prints only the specified messages at User Select Station & Msg on the NAVTEX menu.

   Off: All messages are not printed automatically.
5. Press the **ENT** key.
6. Pres the **MENU/ESC** key several times to close the menu.

Canceling printing

When a menu disappears, you cannot cancel the printing.

1. Press the **PRINT** key while showing the messages to open the print window.
2. Press ▼ to choose “Cancel Print” and then press the **ENT** key.

2.13 Editing the NAVTEX Station List

Maximum 300 NAVTEX stations can be registered into the memory.

Note: To cancel editing of a NAVTEX station, press the **MENU/ESC** key. The message “Exit without saving?” appears. Choose “Yes”, and then press **ENT** key.

Adding NAVTEX station

You may add a NAVTEX station to the NAVTEX station list as follows:

1. Press the **MENU/ESC** key to show the main menu.
2. Press ▲ or ▼ to choose Service, and then press the **ENT** key.

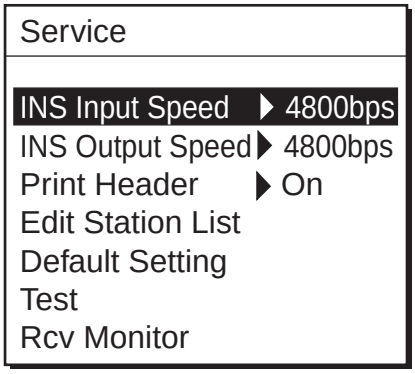

Service menu

3. Press ▲ or ▼ to choose Edit Station List, and then press the **ENT** key.

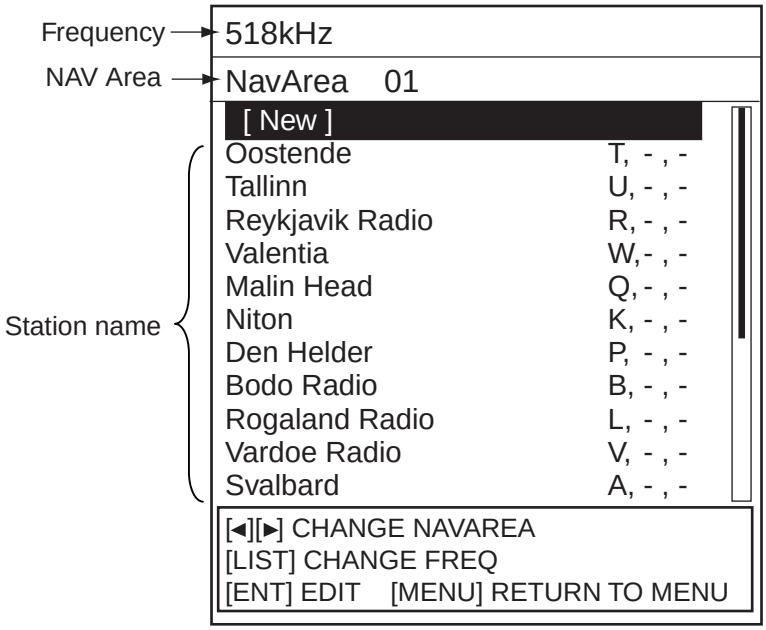

Edit station list display

4. Confirm that New is chosen, and then press the **ENT** key to show the addition window appears.

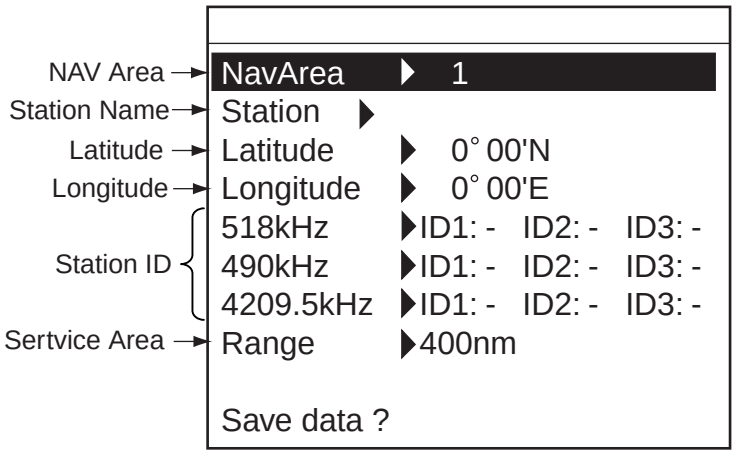

New addition window

5. Confirm that NavArea is chosen, and then press the **ENT** key to show the area No. window.
6. Press ▲ or ▼ to choose a Nav area No. (1 to 16, and EXT), and then press the **ENT** key.
   For NAV area No., see paragraph 1.4. EXT is reserved for future use.
7. Confirm that Station is chosen, and then press **ENT** key.
8. Enter a station name (Max. 18 characters), and then press the **ENT** key.
   a) Press ▲ or ▼ to choose a character. Each press of ▲ shows A -> … -> Z -> a -> … -> z -> 0 -> … -> 9 -> _ -> - -> space in that sequence.
   b) Press ► to move the cursor to next digit.
   c) Repeat steps a) and b) to complete the station name.
9. Confirm that Latitude is chosen, and then press the **ENT** key.
10. Enter the latitude for station, and then press the **ENT** key.
    Use ▲ or ▼ to switch to North and South.
11. Confirm that Longitude is chosen, and then press the **ENT** key.
12. Enter the longitude for station, and then pres the **ENT** key.
    Use ▲ or ▼ to switch to East and West.
13. Confirm that 518kHz, 490kHz or 4209.5kHz is chosen, press the **ENT** key.
14. Enter the station ID (A to Z), and then press the **ENT** key.
    For multiple stations, fill in ID2 and ID3.
15. Confirm that Range is chosen, and then press the **ENT** key.
16. Enter the service area (1 to 999 nm), and then press the **ENT** key.
17. Confirm that Save data? is chosen, and then press the **ENT** key.
    The message “Save new station?” appears.
18. Press ◄ to choose “Yes”, and then press **ENT** key to close the new addition window disappears.

Note: If the station ID was not entered at step 14, the message “Enter ID data.” appears. Press any key, and then enter the station ID.

19. To enter another NAVTEX station, repeat steps 4 through 18.
20. Press the **MENU/ESC** key several times to close the menu.

Editing NAVTEX station

Existing NAVTEX station may be edited as follows:

1. Press the **MENU/ESC** key to show the main menu.
2. Press ▲ or ▼ to choose Service, and then press the **ENT** key.
3. Press ▲ or ▼ to choose Edit Station List, and then press the **ENT** key.
4. Press ◄ or ► to choose the NAV area to be changed (01 to 06, EXT).
5. Press the **LIST** key to choose the frequency to be changed (518kHz, 490kHz or 4209.5kHz).
6. Press ▲ or ▼ to choose the station, and then press the **ENT** key.

7. Press ▲ to choose “Edit”, and then press **ENT** key to show the edit window appears.

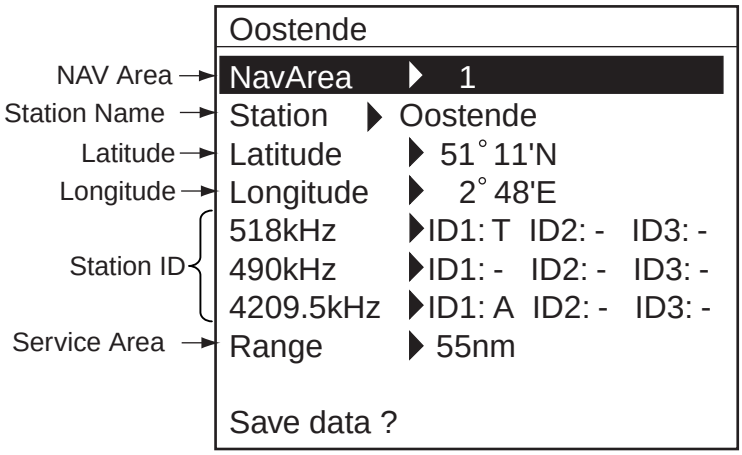

Edit window (Ex. NAVTEX station Oostende)

8. Edit data as appropriate.
9. Confirm that Save station? is chosen, and then press the **ENT** key.
10. Press ◄ to choose “YES”, and then press the **ENT** key to erase the edit window.
11. Press the **MENU/ESC** key several times to close the menu.

Deleting NAVTEX stations

You may delete unnecessary NAVTEX stations as follows:

1. Press the **MENU/ESC** key to show the main menu.
2. Press ▲ or ▼ to choose Service, and then press the **ENT** key.
3. Press ▲ or ▼ to choose Edit Station List, and then press the **ENT** key.
4. Press ◄ or ► to choose the NAV area to be deleted. (01 to 06, EXT).
5. Press the **LIST** key to choose the frequency to be deleted (518kHz, 490kHz or 4209.5kHz).
6. Press ▲ or ▼ to choose the station name to be deleted, and then press **ENT** key.

   The item window appears.

7. Press ▲ or ▼ to choose Delete, and then press the **ENT** key.
   The message “Delete station?” appears.
8. Press ◀ to choose “Yes”, and then press the **ENT** key to close the edit window.
9. Press the **MENU/ESC** key several times to close the menu.

2.14 Icons

The NX-700 shows various icons to denote equipment status, and these are as shown in the table below.

Icon	Status	Meaning
Status icon (shown at the tip of display)		
I	Blinking	Shows that an International frequency (518 kHz) message has not been read.
L1	Blinking	Shows that a Local frequency message has not been read. L1: 490 kHz, L2: 4209.5 kHz
L2	Blinking	
I	Blinking	Appears while receiving a message. I: International frequency (518 kHz) L1: 490 kHz L2: 4209.5 kHz
L1	Blinking	
L2	Blinking	
	Lighting	Displayed when the voltage of the internal battery is low. The message Printer error” also appears on the display.
X	Lighting	Print error (no paper, not connected to the printer, etc.). The message “Printer error” also appears on the display.
P R	Lighting	While printing.
Message icon (shown next to messages)		
NEW	Lighting	Displayed when message is displayed for the first time. (This icon disappeared after 24 hours has passed.)
SAR	Lighting	Displayed when message type D (SAR) is displayed.
!!	Lighting	Appears when message type A, B or L (Warning) is displayed.
	Lighting	Protected message

2.15 Messages List

In addition to the message “Received new local (int’l) msg.” the following message-related messages may appear on the display.

Message	Meaning	Remedy
New message received. Oldest message deleted to free up memory.	Appears when the oldest message is deleted to make space for the latest one.	Press any key.
Same message with lower error rate received. Currently displayed message will be deleted.	Appears when two messages have the same ID are received and the latter’s error rate is lower than the former.	Press any key.
Term of validity expired. Currently displayed message will be deleted.	Appears when 66 hours has passed after receiving the currently displayed message.	Press any key.
Message not chosen for display received; it is a int’l 00 message. Choose “All Message”(LIST menu) to display.	Appears when receiving an international message not specified for display (00).	Press any key, and then choose All Message in the List window.
Message not chosen for display received; it is a local 00 message. Choose “All Message”(LIST menu) to display.	Appears when receiving a local message not specified for display (00).	
Int’l message not chosen for display received. Choose “All Message”(LIST menu) to display.	Appears when receiving an international message not specified for display (Normal).	
Local message not chosen for display received. Choose “All Message”(LIST menu) to display.	Appears when receiving a local message not specified for display (Normal).	

2.16 Other Functions

This paragraph describes the various options which allow you to set up your unit to suit your needs.

NAVTEX menu

Item	Description	Setting
Receive Mode	Chooses the receiving mode. (See paragraph 2.6.)	INS, Auto, Manual
Local Channel	Chooses the local channel.	490kHz, 4209.5kHz
Auto Print	Chooses the message to print automatically. (See paragraph 2.12.)	Off, All, User Select
Rcv Station & Msg	Receives messages in the category.	-
User Select Station & Msg	Sets the station and type of message to be shown on the SELECT MESSAGES display.	-

System menu

Item	Description	Setting
Warn Msg Alm	Turns the audible alarm on/off when receiving a Warning message (A, B, and L).	On, Off
Signal Monitor	Turns monitoring of Rx signal on/off. **Off:** Disables monitoring. **Int'l:** Monitors international frequency. **Local:** Monitors local frequency.	Off, Int'l, Local
Key Beep	Turns key beep on/off.	On, Off
Time Offset	If a GPS receiver feeds nav data to the NAVTEX. You may use local time instead of UTC time. Enter the time difference between local time and UTC time.	-13:30 to +13:30
Units	Chooses units of measurement (distance and ship speed) to be shown on the User Display.	nm, kt, km, km/h, mi, mi/h
Printer	Sets the printer type. (See paragraph 4.6.)	None, External, Internal

Display menu

Item	Description	Setting
Scrolling	Selects the speed of scrolling by pressing ▲ or ▼. **Slow:** Scrolls by one line. **Fast:** Scrolls by half of screen. **Skips to $$:** Scrolls line by line in list display; Skips to $$ position in detailed display.	Slow, Fast, Skip to $$
Font Size	Selects the size of characters.	Small, Medium, Large
Time Display	Selects the time format.	24 hour, 12 hour
Date Display	Selects the date format.	MMM DD YYY, DD MMM YYYY, YYYY MMM DD
User Display	Selects the type of data as user display to be shown at the bottom of the display. **Nav Data** 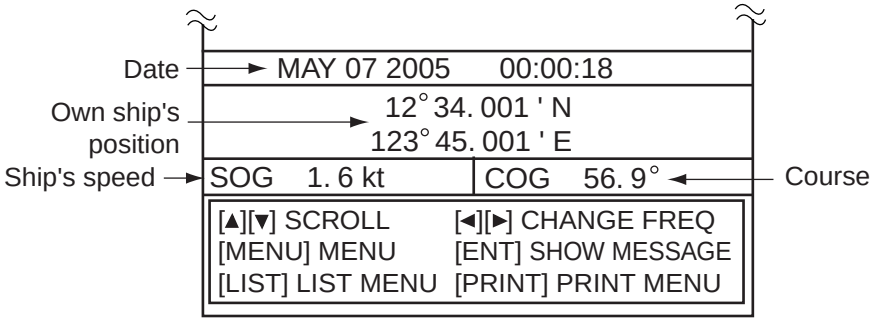 **Distance** Distance between the positions shown in the message and own ship's. 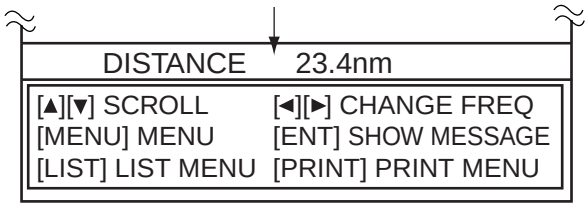 	Off, Nav Data, Distance
Speed Display	Selects the speed format to be displayed. **SOG:** Speed Over Ground **STW:** Speed Through Water	SOG, STW
Contrast	Sets the display contrast.	0 to 9

Service menu

Item	Description	Setting
INS Input Speed	Selects the speed at which to input data from INS..	4800, 9600, 19200, 38400 bps
INS Output Speed	Selects the speed to output data to the INS.	4800, 9600, 19200, 38400 bps
Print Header	Turns the header (Own ship's position and date when receiving a message) for printing on/off.	On, Off
Edit Station List	Edits/deletes stations. (See paragraph 2.13.)	-
Default Settings	Restores all default settings. (See paragraph 3.5.)	-
Test	Starts the diagnostic test. (See paragraph 3.4.)	-
Rcv Monitor	Shows the status for International and Local receiving. International message Local message 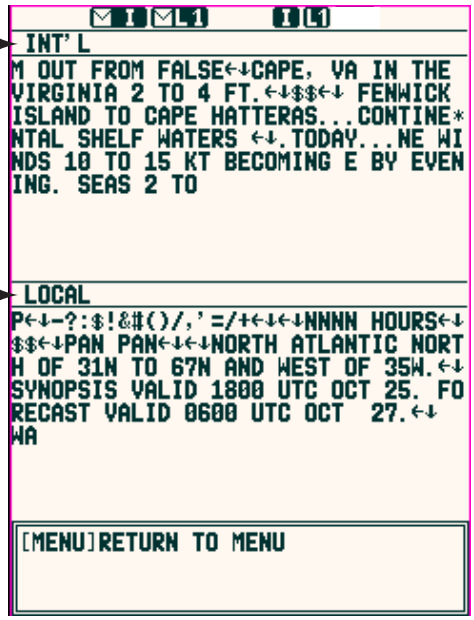 	-

3. MAINTENANCE & TROUBLESHOOTING

This chapter provides information necessary for keeping your unit in good working order and remedying simple problems.

⚠ WARNING

Do not open the equipment.

Hazardous voltage which can cause electrical shock exists inside the equipment. Only qualified personnel should work inside the equipment.

3.1 Maintenance

Regular maintenance is important for optimum performance. A maintenance program should be established and should at least include the items shown in the table below.

Maintenance program

Item	Check point	Remedy
Display unit connectors	Check for tight connection.	Tighten loosened connectors.
LCD	The LCD will, in time, accumulate a coating of dust which tends to dim the picture. Wipe LCD lightly with soft cloth to remove dust.	Wipe the LCD carefully to prevent scratching, using tissue paper and an LCD cleaner. To remove dirt or salt deposits, use an LCD cleaner, wiping slowly with tissue paper so as to dissolve the dirt or salt. Change paper frequently so the salt or dirt will not scratch the LCD. Do not use solvents such as thinner, acetone or benzene for cleaning.
Ground terminal	Check for tight connection and corrosion.	Clean or replace ground wire as necessary.

3.2 Replacement of Fuse, Battery and Thermal Paper

Fuse

The fuse inside the receiver unit protects the equipment from overcurrent and reverse polarity. If the fuse blows, contact your dealer about replacement.

Name	Type	Code No.
Fuse	FGMB 2A 125V	000-103-165

⚠ WARNING

Use the proper fuse.

Use of a wrong fuse can result in damage to the equipment or cause fire.

Battery

A battery is installed on the circuit board inside the display unit, and it preserves data when the power is turned off. The life of the battery is about 5-10 years, and its voltage is checked when the power is turned on. When its voltage is low, the BATT icon appears on the display to alert you. When this happens, contact your dealer to request replacement of the battery.

Note: When the battery is dead, all default settings are restored.

Name	Type	Code No.
BATT	CR2450-F2ST2L	000-144-941

⚠ WARNING

Ensure battery polarity is correct.

Wrong polarity may cause the batteries to explode.

Thermal paper (NX-700A only)

When the thermal paper runs out completely, the icon appears at the right-hand top corner on the display. Replace the paper as follows.

Name	Type	Code No.
Thermal paper	TP058-30CL	000-154-047

1. Turn off the power.
2. Press the button shown below to open the paper holder cover.

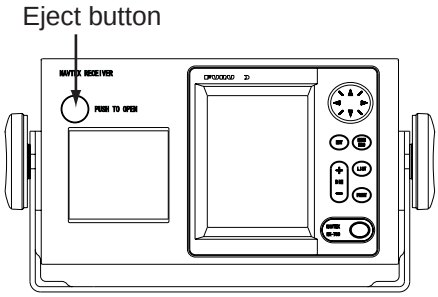

3. Peel the tape from the end of new paper.

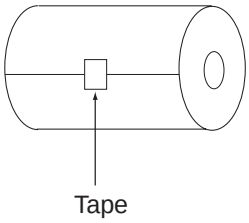

4. Set the new paper in the paper container in the direction shown below.

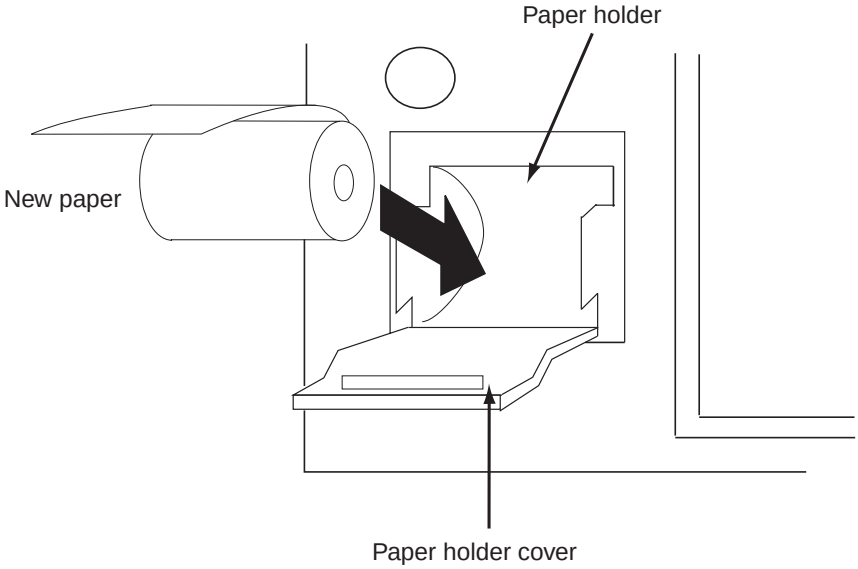

5. Pull the end of the paper by 2 to 3 cm (as shown above), and then close the cover.

3.3 Troubleshooting

This section provides simple troubleshooting procedures which the user can follow to restore normal operation. If you cannot restore normal operation do not attempt to check inside the unit. Any trouble should be referred to a qualified technician.

If . . .	then . . .
you cannot turn on the power	- check for blown fuse. - check battery for proper voltage output.
the equipment receives unwanted messages.	confirm that “Manual” is chosen at Receive Mode on the NAVTEX menu.
NAVTEX signal cannot be received.	check equipment by the diagnostic test.
	check the broadcasting schedule.
	check that the D-sub connector is firmly fastened.
	check that the antenna cable is firmly fastened.
paper does not advance. (NX-700A only)	load paper correctly.
paper feeds but no recording. (NX-700A only)	check if correct thermal paper is being used.
paper has darkened. (NX-700A only)	keep the paper in a well-ventilated and cool place.
the recording is not proper for the external printer. (NX-700B only)	check the setting of Printer on the System menu.
	check the printer cable.
	check that the power of printer is turned on and status is “SELET/READY”.
	check that paper is set properly.

3.4 Diagnostics

The memory test checks ROM, RAM, data port, battery, keyboard and LCD for proper operation and displays program version numbers.

1. Press the **MENU/ESC** key to open the main menu.
2. Press ▼ to choose Service, and then press the **ENT** key.
3. Press ▲ or ▼ to choose Test, and then press the **ENT** key.
   The message “Start test?” appears.
4. Press ◄ to choose “Yes”, and then press the **ENT** key.

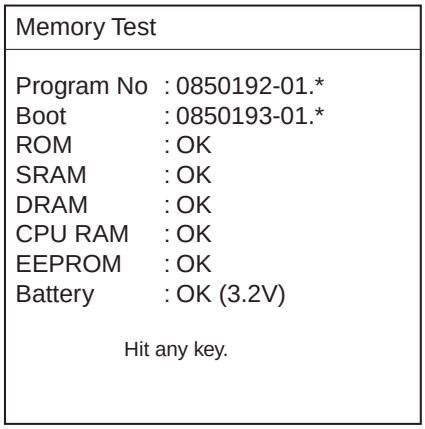

*: Program version no.

Memory test

For any NG (No Good), contact your dealer.

5. When the message “Hit any key.” appears at the bottom of screen, press any key (except ⏻ key) to show the key test screen.

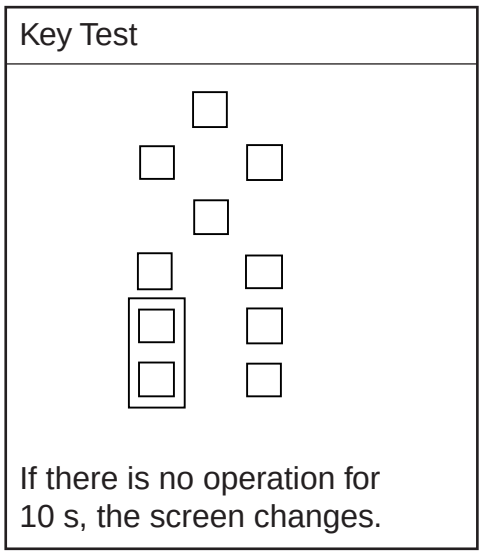

Key test

6. Press each key (except ⏻ key) one by one.
   A key is functioning properly if its on-screen location fills in black when the key is pressed.
7. After all keys have been tested or no key is pressed after 10 seconds, the equipment starts the LCD test by showing the white and black display (level 0 to 9).

8. When the message “Hit any key” appears on the screen, press any key (except ⏻ key) to show the Rx test screen.
   The alarm sounds while the Rx test is being conducted. Also the test message is printed when the item other than “None” at Printer on System menu.

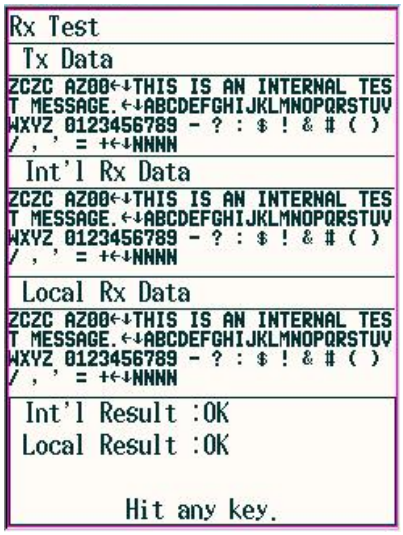

Rx test

9. When the message “Hit any key.” appears on the screen, press any key (except ⏻ key) or wait for one minute with no operation to finish.
10. Press the **MENU/ESC** key several times to close the menu.

3.5 Restoring All Default Settings

This operation restores all default settings. The following two settings, however, are not disturbed.
-Received messages
-NAVTEX stations list (See paragraph 2.13.)

1. Press the **MENU/ESC** key to show the main menu.
2. Press ▼ to choose Service, and then press the **ENT** key.
3. Press ▲ or ▼ to choose Default Setting, and then press **ENT** key.
   The message “Restore default settings?” appears.
4. Press ◄ to choose “Yes”, and then press the **ENT** key.
   The Service menu appears.
5. Press the **MENU/ESC** key several times to close the menu.

4. INSTALLATION

4.1 Display Unit

The display unit can be installed on a tabletop, on the overhead, or in a panel. Refer to the outline drawings at the back of this manual for installation instructions. When selecting a mounting location, keep in mind the following points.

- Locate the unit away from exhaust pipes and vents.
- Locate it of direct sunlight, (or in a suitable, ventilated enclosure) to prevent heat which can build up inside the cabinet.
- The mounting location should be well ventilated.
- Mount the unit where shock and vibration are minimal.
- Allow sufficient maintenance space at the sides and rear of the unit and leave sufficient slack in cables, to facilitate maintenance and servicing.

Tabletop, overhead mounting

1. Fix the hanger by using four self-tapping screws (5x20).
2. Screw knob bolts in display unit, set it to the hanger, and tighten the knob bolts.

Note: For the overhead mounting, reinforce the mounting location and secure the hanger, with bolts, nuts and washers (local supply).

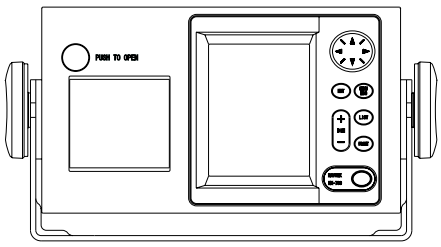

NX-700A

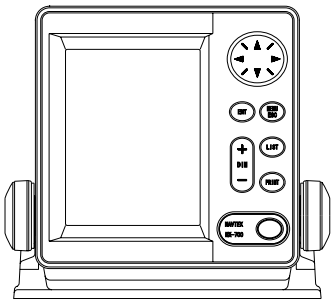

NX-700B

Flush mounting

The display unit can be installed flush mounted in a console or panel by using the optional flush mount kit.

.

(For NX-700A)

Type: OP08-19 Code No.: 004-514-810

Name	Type	Code No.	Qty	Remarks
Mounting metal	08-023-1019	100-326-960	1	
Self-tapping screw	5X20	000-802-081	6	
Hex. bolt	M8x15	000-862-144	2	
Spring washer	M8	000-864-262	2	

1. Cut out a hole with dimensions as shown below in the mounting location.

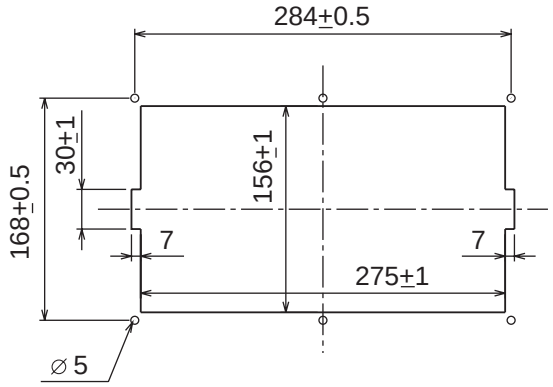

2. Attach the fixing metal to the display unit with two hex. bolts (M8x15, supplied with optional kit) and spring washers (supplied with optional kit).
3. Fasten six self-tapping screws to fix the display unit to the mounting location.

(For NX-700B)

Type: OP08-20 Code No.: 004-514-820

Name	Type	Code No.	Qty	Remarks
Mounting metal	08-023-2011	100-327-010	1	
Self-tapping screw	5x20	000-802-081	4	
Pan head screw	M4x12	000-802-130	4	

1. Cut out a hole with dimensions as shown below in the mounting location.

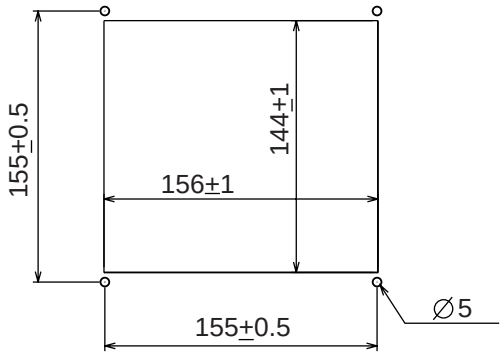

2. Attach the fixing metal to the display unit with four pan head screws (M4X12, supplied with the optional kit).
3. Fasten four self-tapping screws (supplied with the optional kit) to fix the display unit to the mounting location.

4.2 Receiver Unit

General mounting considerations

- The mounting location should be well ventilated and dry.
- The unit can be mounted on bulkhead or the desk.
- Secure the maintenance space shown in drawing at the back of this manual for ease of maintenance and service.

Mounting Method

Fasten the receiver unit with four self-tapping screws (5x20, supplied as installation material). For bulkhead mounting, tighten upper self-tapping screws so there is 5 mm clearance between bottom of screw head and bulkhead. Then, hook the receiver unit on the upper screws. Tighten upper screws followed by the lower screws.

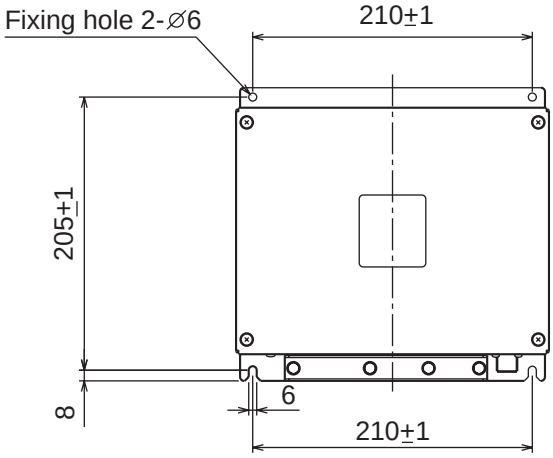

4.3 Antenna Unit

Mounting considerations

Install the antenna unit referring to the antenna installation diagram at the back of this manual. When selecting a mounting location for the antenna unit, keep in mind the following points:

- Do not shorten the antenna cable.
- The NX-700 contains a very sensitive receiver. To avoid mutual interface with other radio equipment, do not install this unit near an SSB/VHF/CB radiotelephone.
- When fixing the antenna cable to the mast with the cable tie, wrap the vinyl sheet between the cable and mast to protect the cable from injury.

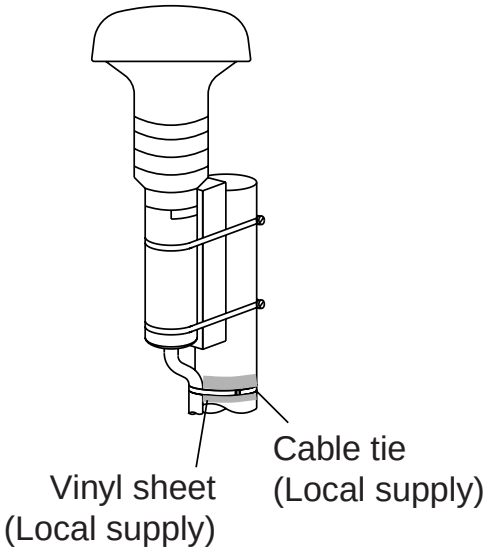

4.4 Printer (NX-700B only)

Prepare the printer by locally as shown below for the NX-700B.

-Serial printer
-Baud Rate: 9600 bps
-Character length: 8 bit
-Parity: No
-X control: XON/XOFF
-32 characters/line or more

4.5 Wiring

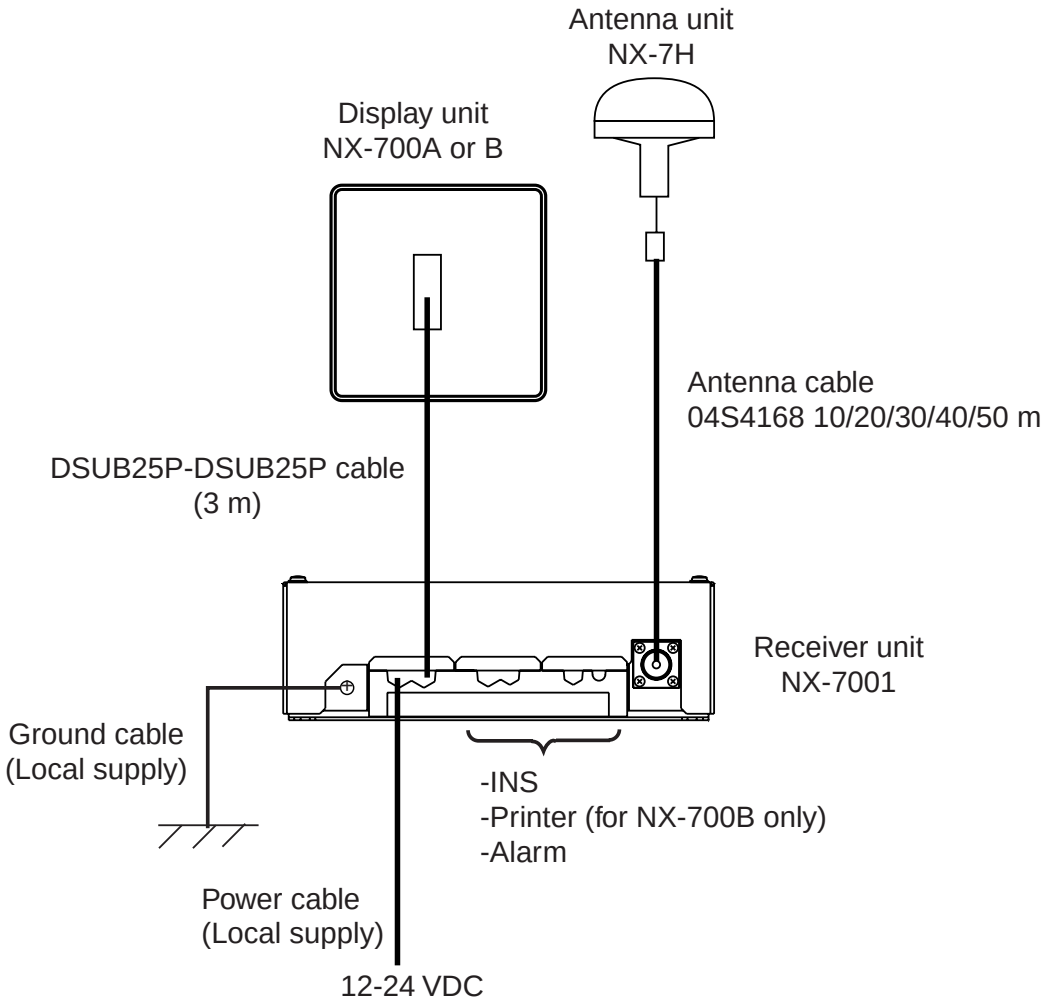
Antenna unit
NX-7H
Display unit
NX-700A or B
Antenna cable
04S4168 10/20/30/40/50 m
DSUB25P-DSUB25P cable
(3 m)
Receiver unit
NX-7001
Ground cable
(Local supply)
-INS
-Printer (for NX-700B only)
-Alarm
Power cable
(Local supply)
12-24 VDC

Receiver unit

All cables are gathered to the receiver unit. Connect cables at inside of the receiver unit as shown below.

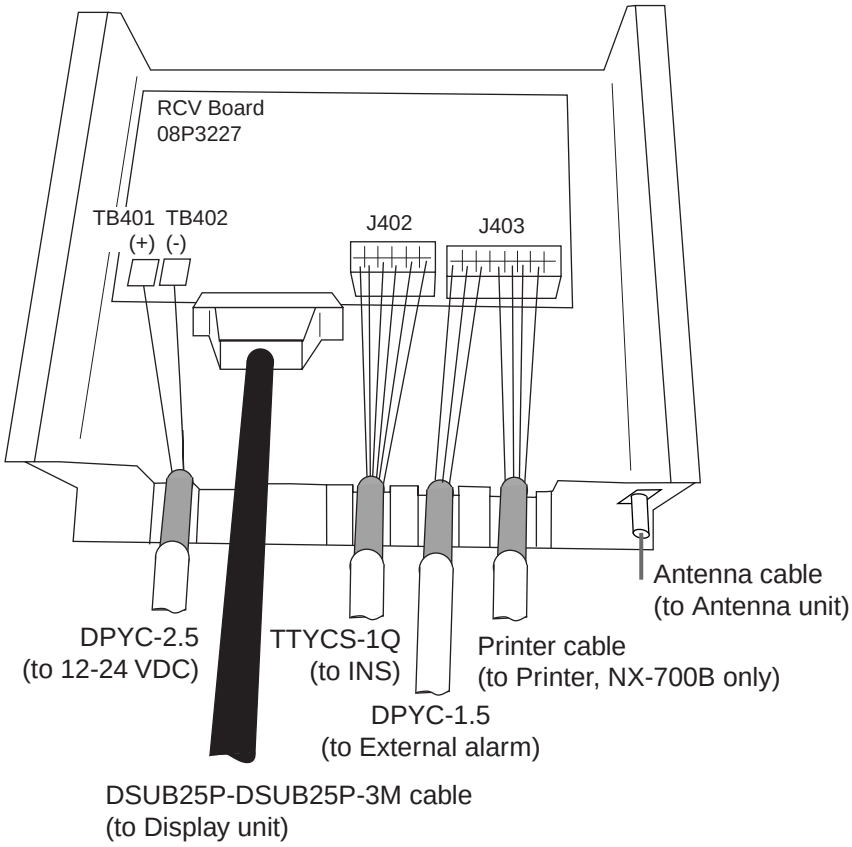

Receiver unit, inside view

Use the following JIS cable (Japan Industrial Standard) or equivalent to connect power source, INS and external alarm appropriately.
-Power source: DPYC-2.5
-INS: TTYSC-1Q
-External alarm: DPYC-1.5

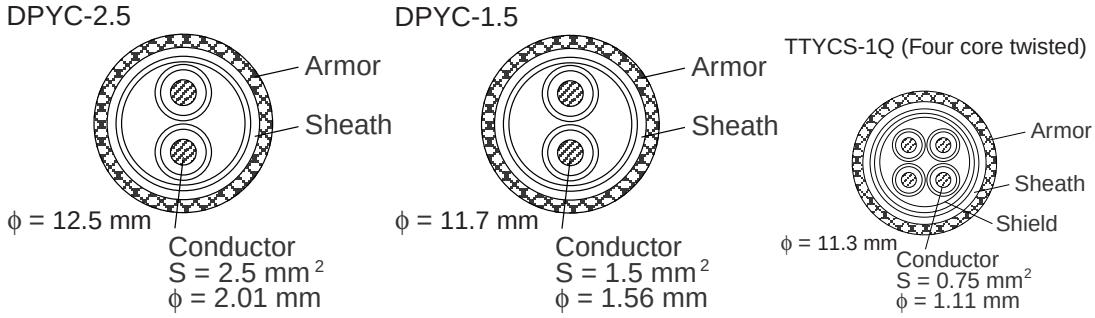

For printer, use the cable supplied with the printer.

Fabricate these cables as below to connect to the receiver unit.

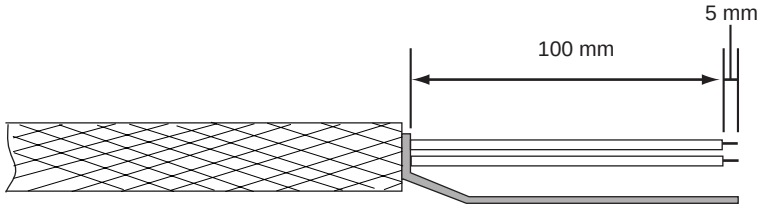

How to use J402 and 403 connector

1. Insert the terminal opener in connector.
2. Insert a wire in terminal while pressing and holding the terminal opener.
3. Release the terminal opener. Pull wire to confirm firmly set it is in terminal board.

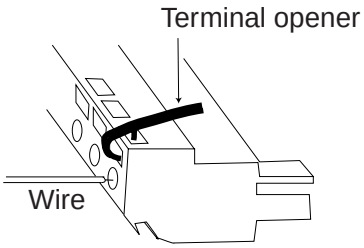

<u>Antenna cable</u>

Be sure to leave some slack in the cable for future service and maintenance.

For RG-10/U-Y cable

When using the coaxial cable, type RG-10/U-Y (or equivalent), attach the FM-MP-7 connector (supplied as installation material) as below.

1. Remove the sheath by 30 mm.
2. Bare 23 mm of the center conductor. Trim braided shield by 5 mm and tin.
3. Slide coupling ring onto cable.
4. Screw the plug assembly on the cable.
5. Solder plug assembly to braided shield through solder holes. Solder contact sleeve to conductor.
6. Screw coupling ring into plug assembly.

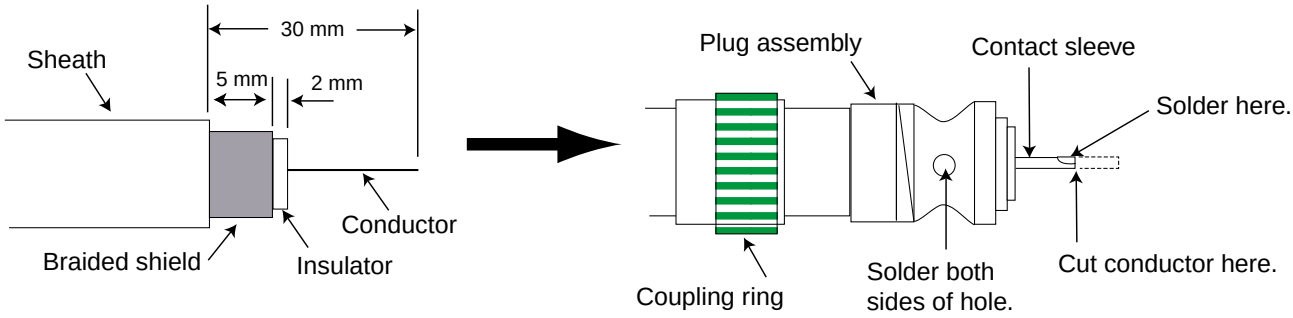

Extending antenna cable length

When connecting two cables for extension, use optional extension cable kit OP-04-2.

Code No.: 000-041-174 (10 m), 000-041-175 (20 m), 000-041-176 (30 m), 000-041-177 (40 m), 000-041-178 (50 m)

Name	Type	Code No.	Qty	Remarks
Cable assy	04S4168	005-948-320	1	10 m
		005-948-330		20 m
		005-948-340		30 m
		005-948-350		40 m
		005-948-360		50 m
Connector	M-A-JJ	000-101-287	1	One of these is contained.
	FMA-1	000-152-964	1	
Insulating tape	U tape 0.5x19x5M	000-800-985	1	

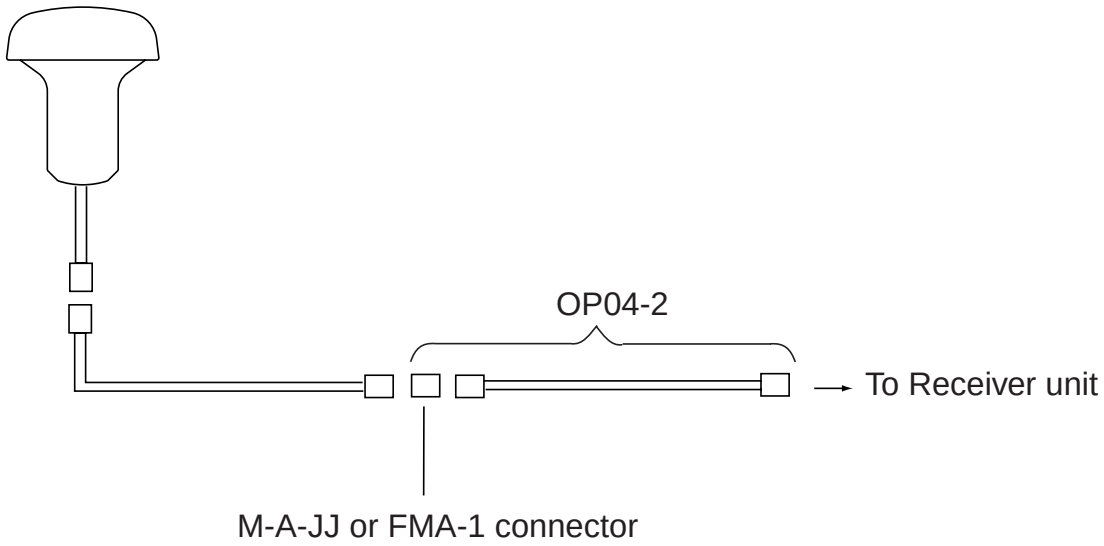

Grounding

The ground wire (local supply) should be 1.25 sq or larger. The ground wire should be as short as possible.

4.6 Setting of Printer

After the connection completely, the setting of printer should be done for NX-700B as shown below. (For NX-700A, use the default setting as is.)

1. Press the ⏻ key to turn the power on.
2. Press the **MENU** key to show the main menu.

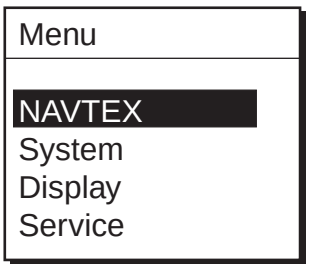

3. Press ▼ to choose System, and then press the **ENT** key or ► to activate the System menu.

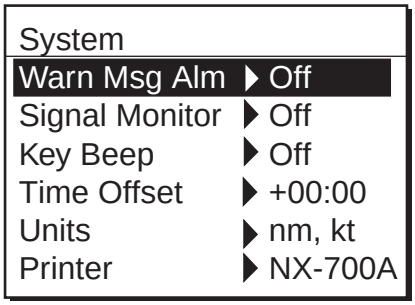

4. Press ▼ to choose Printer, and then press the **ENT** key or ► to show the item window.

5. Press ▲ or ▼ to choose the appropriate setting, and then press the **ENT** key.

   NX-700A: For NX-700A only.

   Upright: When NX-700B is connected with the upright type printer which ejects the paper from bottom to top direction.

   Inverted: When NX-700B is connected with the wall-hung type printer which ejects the paper from top to bottom direction.
6. Press the **MENU** key several times to close the menu.

4.7 Interfacing

This equipment can receive navigation data in IEC 61162-1 Ed2/2 format.

Priority

TIME & DATE	ZDA
L/L	GNS > GGA > RMC > GLL
SOG	VTG > VBW > RMC
STW	VHW > VBW
COG	VTG > RMC

Input data sentence description

GGA: GPS position fixing condition

```
$--GGA,hhmmss.ss,llll.lll,a,yyyyy.yyy,a,x,xx,x.x,x.x,M,x.x,M,x.x,xxxx*hh<CR><LF>
            |         |   |       |     | | | |   |   |   |   | |    |   |
            |         |   |       |     | | | |   |   |   |   | |    |   +-- 11
            |         |   |       |     | | | |   |   |   |   | |    +---- 10
            |         |   |       |     | | | |   |   |   |   | +--------- 9
            |         |   |       |     | | | |   |   |   | +---+------------ 8
            |         |   |       |     | | | |   |   | +---+------------------ 7
            |         |   |       |     | | | |   +-------------------------- 6
            |         |   |       |     | | | +----------------------------- 5
            |         |   |       |     | | +------------------------------- 4
            |         |   |       +----+---------------------------------- 3
            |         +---+------------------------------------------------ 2
            +------------------------------------------------------------- 1
```

1. UTC of position
2. Latitude, N/S
3. Longitude, E/W
4. GPS quality indicator (see note)
5. Number of satllite in use,00-12, may be different from the number in view
6. Horizontal dilution of precision
7. Antenna altitude above/below mean sealevel, m
8. Geoidal separation, m
9. Age of differential GPS data
10. Differential reference station ID, 0000-1023
11. Checksum

NOTE
0 = fix not available or invalid
1 = GPS SPS mode, fix valid
2 = differential GPS, SPS mode, fix valid
3 = GPS PPS mode, fix valid
4 = Real Time Kinetic. Satellite system used in RTK mode with fixed integers
5 = Float RTK. Satellite system used in RTK mode with floating fingers
6 = Estimated (dead reckoning) mode
7 = Manual input mode
8 = Simulator mode
The GPS quality indicator shall not be a null field.

GLL: Latitude and longitude

```
$--GLL,llll.lll,a,yyyyy.yyy,a,hhmmss.ss,A,a*hh<CR><LF>
        |    |        |      |           |     | | |
        |    |        |      |           |     | | +------- 6
        |    |        |      |           |     | +--------- 5
        |    |        |      |           |     +----------- 4
        |    |        |      |          +---------------- 3
        |    |       +------+----------------------- 2
        +---+---------------------------------- 1
```

1. Latitude, N/S
2. Longitude, E/W
3. UTC of position
4. Status: A=data valid, V=data invalid
5. Mode indicator(see note)
6. Checksum

NOTE Positioning system Mode indicator:

A = Autonomous
D = Differential
E = Estimated (dead reckoning)
M = Manual input
S = Simulator
N = Data not valid

The Mode indicator field supplements the Status field. The Status field shall be set to V=invalid for all values of Operating Mode except for A=Autonomous and D=Differential. The positioning system Mode indicator and Status field shall not be null fields.

RMC: Recommend Minimum Specific GNSS Data

```
$--RMC,hhmmss.ss,A,llll.lll,a,yyyyy.yyy,a,x.x,x.x,xxxxxx,x.x,a,a*hh<CR><LF>
       |         |   |    |         |    |   |   |     |       |   |   |   |
       |         |   |    |         |    |   |   |     |       |   |   |  +--- 10
       |         |   |    |         |    |   |   |     |       |   |   +----- 9
       |         |   |    |         |    |   |   |     |       +--+-------- 8
       |         |   |    |         |    |   |   |     +---------------- 7
       |         |   |    |         |    |   |   +----------------------- 6
       |         |   |    |         |    |   +-------------------------- 5
       |         |   |    |         +---+----------------------------- 4
       |         |   +---+---------------------------------------- 3
       |         +------------------------------------------------- 2
       +------------------------------------------------------------ 1
```

1. UTC of position fix
2. Status: A=data valid, V=navigation receiver warning
3. Latitude, N/S
4. Longitude, E/W
5. Speed over ground, knots
6. Course over ground, degrees true
7. Date: dd/mm/yy
8. Magnetic variation, degrees E/W
9. Mode indicator(see note)
10. Checksum

NOTE Positioning system Mode indicator:

A = Autonomous
D = Differential
E = Estimated (dead reckoning)
M = Manual input
S = Simulator
N = Data not valid

The Mode indicator field supplements the Status field. The Status field shall be set to V=invalid for all values of Operating Mode except for A=Autonomous and D=Differential. The positioning system Mode indicator and Status field shall not be null fields.

ZDA: Time and date

```
$--ZDA,hhmmss.ss,xx,xx,xxxx,xx,xx*hh<CR><LF>
       |         |   |     |    |   |  |
       |         |   |     |    |   |  +--------- 7
       |         |   |     |    |   +----------- 6
       |         |   |     |    +-------------- 5
       |         |   |     +------------------ 4
       |         |   +----------------------- 3
       |         +------------------------- 2
       +--------------------------------- 1
```

1. UTC
2. Day, 01 to 31(UTC)
3. Month, 01 to 12(UTC)
4. Year(UTC)
5. Local zone hours, 00h to +-13h
6. Local zone minutes, 00 to +59
   as local hours
7. Checksum

NRQ: Request NAVTEX messages

Command to request specific NAVTEX message(s) to be sent to IBS port. Messages may be sent in any order. Each message sent from the IBS port shall be preceded by the NRX sentence.

$-NRQ,x,h,h*hh<CR><LF>

- message type B_2(note 2)
- transmitter coverage area mask B_1(note 1)
- freq ('490', '518' or '4209')

Note 1: the transmitter coverage area mask is defined as a 32 bit mask 0xFF.FF.FF.FF where the least significant bit represents transmitter coverage area 'A', the next bit is 'B' and so on up to bit 25 which is 'Z'. Bits 31-26 shall be set to '0'. To select a transmitter coverage area its corresponding bit shall be set to '1'; to deselect a transmitter coverage area its corresponding bit shall be set to '0'.

Note 2: the message type mask is defined as a 32 bit mask 0xFF.FF.FF.FF where the least significant bit represents message type 'A', the next bit is 'B' and so on up to bit 25 which is 'Z'. Bits 31-26 shall be set to '0'. To select a message type its corresponding bit shall be set to '1'; to deselect a message type its corresponding bit shall be set to '0'.

NMK: Set NAVTEX mask

Command to set B_1.B_2 mask for specific NAVTEX message(s) to be stored in internal message memory & echoed to the IBS port.

$-NMK,x,h,h*hh<CR><LF>

- message type B_2(note 2)
- transmitter coverage area mask B_1(note 1)
- freq ('490', '518' or '4209')

Note 1: the transmitter coverage area mask is defined as a 32 bit mask 0xFF.FF.FF.FF where the least significant bit represents transmitter coverage area 'A', the next bit is 'B' and so on up to bit 25 which is 'Z'. Bits 31-26 shall be set to '0'. To select a transmitter coverage area its corresponding bit shall be set to '1'; to deselect a transmitter coverage area its corresponding bit shall be set to '0'.

Note 2: the message type mask is defined as a 32 bit mask 0xFF.FF.FF.FF where the least significant bit represents message type 'A', the next bit is 'B' and so on up to bit 25 which is 'Z'. Bits 31-26 shall be set to '0'. To select a message type its corresponding bit shall be set to '1'; to deselect a message type its corresponding bit shall be set to '0'.

Example usage:

&NVNMK,518,00001E1F,00000023*42

ACK: Acknowledge

```
$--ACK,xxx*hh<CR><LF>
          |   |
          |   + ------------------------2
          +-----------------------------1
```

1. Local alarm number(identifier)
2. Checksum

GNS:

```
$--GNS,hhmmss.ss,llll.lll,a,yyyyy.yyy,a,c--c,xx,x.x,x.x,x.x,x.x,x.x*hh<CR><LF>
        |       |    |    |    | |   | |  |  |  |  | |
        |       |    |    |    | |   | |  |  |  |  | +--- 11
        |       |    |    |    | |   | |  |  |  |  +------ 10
        |       |    |    |    | |   | |  |  |  +---------- 9
        |       |    |    |    | |   | |  |  +-------------- 8
        |       |    |    |    | |   | |  +------------------ 7
        |       |    |    |    | |   | +---------------------- 6
        |       |    |    |    | |   +------------------------- 5
        |       |    |    |    | +------------------------------ 4
        |       |    |    +-----+--------------------------------- 3
        |       +-----+------------------------------------------- 2
        +------------------------------------------------------------ 1
```

1. UTC of position
2. Latitude, N/S
3. Longitude, E/W
4. Mode indicator
5. Total number of satllite in use,00-99
6. HDOP
7. Antenna altitude, metres, re:mean-sea-level(geoid)
8. Geoidal separation
9. Age of differential data
10. Differential reference station ID
11. Checksum

VHW: Water speed and heading

```
$--VHW,x.x,T,x.x,M,x.x,N,x.x,K*hh<CR><LF>
        |   |   |   |   |   |   |   |   |
        |   |   |   |   |   |   |   |   +--------- 5
        |   |   |   |   |   |   +--+----------- 4
        |   |   |   |   +--+----------------- 3
        |   |   +---+----------------------- 2
        +---+---------------------------- 1
```

1. Heading, degrees true
2. Heading, degrees magnetic
3. Speed, knots
4. Speed, km/h
5. Checksum

VTG: Course over ground and ground speed

```
$--VTG,x.x,T,x.x,M,x.x,N,x.x,K,a*hh<CR><LF>
        |   |   |   |   |   |   |   |   |   |
        |   |   |   |   |   |   |   |   |   +------- 6
        |   |   |   |   |   |   |   |   +--------- 5
        |   |   |   |   |   |   +--+----------- 4
        |   |   |   |   +--+----------------- 3
        |   |   +--+----------------------- 2
        +--+---------------------------- 1
```

1. Course over ground, degrees true
2. Course over ground, degrees magnetic
3. Speed over ground, knots
4. Speed over ground, km/h
5. Mode indicator(see note)
6. Checksum

NOTE Positioning system Mode indicator:

A = Autonomous
D = Differential
E = Estimated (dead reckoning)
M = Manual input
S = Simulator
N = Data not valid

The positioning system Mode indicator field shall not be a null field.

VBW: Dual ground/water speed

```
$--VBW,x.x,x.x,A,x.x,x.x,A,x.x,A,x.x,A*hh<CR><LF>
       |    |  |   |    |  |   |  |   |   |  |
       |    |  |   |    |  |   |  |   |   |  +--- 11
       |    |  |   |    |  |   |  |   |   +----- 10
       |    |  |   |    |  |   |  |   +-------- 9
       |    |  |   |    |  |   |  +----------- 8
       |    |  |   |    |  |   +-------------- 7
       |    |  |   |    |  +----------------- 6
       |    |  |   |    +-------------------- 5
       |    |  |   +------------------------ 4
       |    |  +--------------------------- 3
       |    +------------------------------ 2
       +--------------------------------- 1
```

1. Longitudial water speed, knots
2. Transverse water speed, knots
3. Status: water speed, A=data valid V=data invalid
4. Longitudial ground speed, knots
5. Transverse ground speed, knots
6. Status: ground speed, A=data valid V=data invalid
7. Stern transverse water speed, knots
8. Status: stern water speed, A=data valid V=data invalid
9. Stern transverse ground speed, knots
10. Status: stern ground speed, A=data valid V=data invalid
11. Checksum

Output data description

NRX: New NAVTEX received message

New NAVTEX message to follow in ASCII format

$NXNRX,xxxx,x,x,x,xx,xx,xxxx,hhmmss,x.x,n--n*hh<CR><LF>

- encapsulated message
- error rate % (xx.x)
- UTC of receipt of message
- year
- month (1-12)
- day (0-31)
- freq ('490', '518' or '4209')
- number of lines in message (1 to 999)
- line number (1 to 999)
- message identifier ($B_1B_2B_3B_4$)

The first NRX sentence transmitted for a particular NAVTEX message shall contain valid data for all fields. For subsequent NRX sentences encapsulating a NAVTEX message, all fields apart from 'message identifier', 'line number' and 'encapsulated message' are optional. If UTC time or date are not known then the fields are NULL.

Example usage:

```
$NXNRX,TA21,1,4,518,10,01,2005,102000,2.2,291600 UTC JAN =*hh
$NXNRX,TA21,2,4,,,,,,,OOSTENDERADIO - INFO 37/04 =*hh
$NXNRX,TA21,3,4,,,,,,,WESTHINDER ANCHORAGE, ANCHOR LOST IN*hh
$NXNRX,TA21,4,4,,,,,,,POSITION 51-24.94N 002-40.02E.+*hh
```

Example usage when no UTC is available to the equipment:

```
$NXNRX,TA21,1,4,518,,,,,2.2, TEST MESSAGE*hh
```

Where the NAVTEX message contains reserved characters as defined in IEC 61162-1, then these shall be handled by using ASCII 'escape code' :

c) Reserved character	ASCII escape code
d) <CR>	^0D
e) <LF>	^0A
f) $	^24
g) *	^2A
h) ,	^2C
i) !	^21
j) \	^5C
k) ^	^5E
l) ~	^7E

ALR: Set alarms

```
$NXALR,hhmmss.ss,xxx,A,A,c--c*hh<CR><LF>
       |         |  |  |  |   |
       |         |  |  |  |   +----------------- 6
       |         |  |  |  +----------------- 5
       |         |  |  +-------------------- 4
       |         |  +---------------------- 3
       |         +------------------------- 2
       +--------------------------------- 1
```

1. Time of alarm condition change, UTC
2. Local alarm number(identifier)
3. Alarm condition(A=threshold exceeded, V=not exceeded)
4. Alarm's acknowledge state, A=acknowledged V=unacknowledged
5. Alarm's description text
6. Checksum

Serial Interface

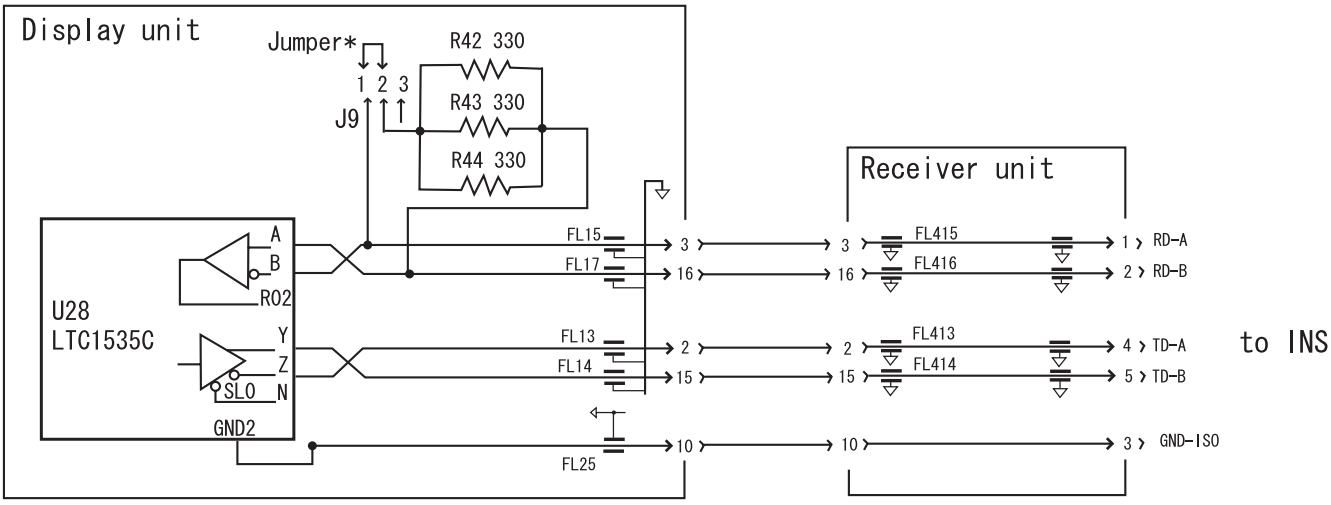

*When only NX-700A/B is listner for talker: Short #1 and 2 (default setting).
When multiple listners (including NX-700A/B) for talker: NX-700A/B is the end of bus; Short #1 and2.
Besides above; Short #2 and 3.

MENU TREE

- MENU/ESC Key
  - NAVTEX
    - Receive Mode (INS, ***Auto***, Manual)
    - Local Channel (***490kHz***, 4209.5kHz)
    - Auto Print (Off, ***All***, User Select)
    - Rcv Station & Msg
    - User Select Station & Msg
  - System
    - Warn Msg Alm (***Off***, On)
    - Signal Monitor (***Off***, Int'l, Local)
    - Key Beep (Off, ***On***)
    - Time Offset (-13:30 to +13:30, ***0:00***)
    - Units (***nm, kt***, km, km/h, mi, mi/h)
    - Printer (None, ***NX-700A***, Upright, Inverted)
  - Display
    - Scrolling (***Slow***, Fast, Skip To $$)
    - Font Size (Small, ***Medium***, Large)
    - Time Display (***24hour***, 12hour)
    - Date Display (***MMM DD YYYY***, DD MMM YYYY, YYYY MMM DD)
    - User Display (***Off,*** Nav Data, Distance)
    - Speed Display (***SOG***, STW)
    - Contrast (0 to 9, ***5***)
  - Service
    - INS Input Speed (***4800***, 9600, 19200, 38400bps)
    - INS Output Speed (***4800***, 9600, 19200, 38400bps)
    - Print Header (Off, ***On***)
    - Edit Station List
    - Default Setting
    - Test
    - Rcv Monitor

- LIST key
  - All Messages
  - Alarm Messages
  - User Selected Messages
  - Good Messages
  - Lock Message

- PRINT key
  - Print
  - Cancel Print

SPECIFICATIONS OF NAVTEX RECEIVER NX-700

1 NAVTEX RECEIVER

1.1	Receiving frequency	518 kHz and 490 kHz or 4209.5 kHz
1.2	Mode of reception	F1B
1.3	Sensitivity	2 µV e.m.f. (50 ohms), 4% error rate or less
1.4	Input protection	Withstands 30Vrms for 15 min or more (w/ pre-amp unit)
1.5	Spurious emission	1nW or less
1.6	Message category	A: Navigation warning
		B: Meteorological warning
		C: Ice report
		D: Search and rescue information/ piracy and armed robbery
		E: Meteorological forecast
		F: Pilot message
		G: Decca message
		H: Loran-C message
		I: Omega message
		J: Differential omega message
		K: Other electronic navigational aid and system message
		L: Navigational warning (additional)
		M to Y: Reserved – presently not used
		V: Notice to Fishermen (US only)
		Z: QRU (no message on hand)

2 DISPLAY SECTION

2.1	Display system	5-inch, 76 (W) x 100 (H) mm, monochrome LCD, 240 x 320 dots
2.2	Display modes	Message selection mode
		Message display mode
2.3	ID storage	200 x 2 channels
2.4	Message storage	200 messages x 2 channels
		(100,000 characters x 2 channels)

3 PRINTER SECTION (FOR NX-700A ONLY)

3.1	Printing system	Line thermal head printing system
3.2	Printing paper	Thermal paper (58 mm x 30 m)
3.3	Printing width	48mm
3.4	Character format	24 x 12 dot
3.5	Dot pitch	8 dots/ mm
3.6	Number of characters	32 characters/line
3.7	Print speed	Approx. 20mm/sec.

4 ANTENNA UNIT

4.1	Antenna type	NX-7H: H-field antenna for NX-700 with preamp
4.2	Output impedance	50 ohms
4.3	Power supply	+7V to +9V (thru co-ax cable)

5 INTERFACE

5.1	Input data	IEC61162 or NMEA0183 Ver1.5/2.0,
		GGA, GLL, RMC, ZDA, NRQ, NMK, ACK, GNS, VHW, VTG, VBW
	Output data	NRX, ALR
5.2	Alarm	Contact closure signal (max. 0.5A, 50V) for SAR alert

6 POWER SUPPLY

12-24VDC: TYP 1.2-0.6A, MAX 1.5-0.8A (NX-700A),
TYP 0.6-0.3A, MAX 0.7-0.4A (NX-700B)

7 ENVIRONMENTAL CONDITION

7.1	Ambient temperature	
	Antenna unit	-25°C to +70°C
	Receiver / Display unit	-15°C to +55°C
7.2	Relative humidity	95% at 40°C (without dew condensation)
7.3	Waterproofing	
	Antenna unit	IP66
	Receiver / Display unit	IP20 (NX-700B: IP25 for front panel)
7.4	Vibration	IEC 60945

8 COATING COLOR

8.1	Display unit	N3.0
8.2	Receiver unit	N3.0
8.3	Antenna unit	N9.5

PACKING LIST

NX-700A/NX-700A-HK

NAME	OUTLINE	DESCRIPTION/CODE №	Q'TY
ユニット UNIT			
指示部 DISPLAY UNIT	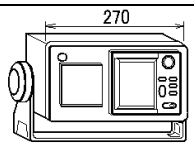	NX-700-A* 000-040-342 **	1
予備品 SPARE PARTS		**SP08-02000**	
感熱記録紙 RECORDING PAPER	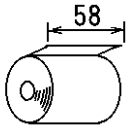	W-58 999-999-086	1 (*1)
工事材料 INSTALLATION MATERIALS			
工事材料 INSTALLATION MATERIALS		CP08-01861 004-514-350	1

1.ｺｰﾄﾞ番号末尾の[**]は、選択品の代表ｺｰﾄﾞを表します。
CODE NUMBER ENDING WITH "**" INDICATES THE CODE NUMBER OF REPRESENTATIVE MATERIAL.

2.(*1)は、ﾀﾞﾐｰｺｰﾄﾞに付き、注文できません。
(*1) THIS CODE CANNOT BE ORDERED.

（略図の寸法は、参考値です。 DIMENSIONS IN DRAWING FOR REFERENCE ONLY.）

PACKING LIST

08AW-X-9860 -0 1/1

NX-700B/NX-700B-HK

NAME	OUTLINE	DESCRIPTION/CODE №	Q'TY
ユニット UNIT			
指示部 DISPLAY UNIT	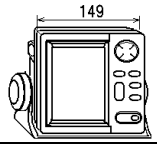	NX-700B* 000-152-663 **	1
工事材料 INSTALLATION MATERIALS			
+ﾄﾗｽﾀｯﾋﾟﾝﾈｼﾞ 1種 SELF-TAPPING SCREW	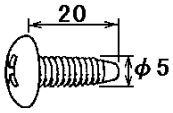	5X20 SUS304 000-802-081	4

1.ｺｰﾄﾞ番号末尾の[**]は、選択品の代表ｺｰﾄﾞを表します。
CODE NUMBER ENDING WITH "**" INDICATES THE CODE NUMBER OF REPRESENTATIVE MATERIAL.

（略図の寸法は、参考値です。 DIMENSIONS IN DRAWING FOR REFERENCE ONLY.）

PACKING LIST

NX-7001-AN-J*/E*,NX-7001-BN-J*/E*

NAME	OUTLINE	DESCRIPTION/CODE №	Q'TY
ユニット UNIT			
受信部 RECEIVER UNIT	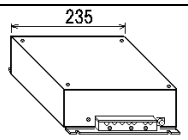	NX-7001-* 000-040-345 **	1
受信部予備品 RECEIVER UNIT SPARE PARTS			
予備品 SPARE PARTS		SP08-02101 004-514-370	1
工事材料 INSTALLATION MATERIALS		**CP08-01860**	
ｹｰﾌﾞﾙ組品 CABLE ASSY.	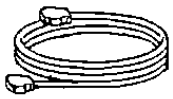	DSUB25P-DSUB25P-3M 000-152-698	1
受信部工材 RECEIVER UNIT INSTALLATION MATERIALS			
工事材料 INSTALLATION MATERIALS	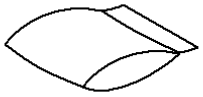	CP08-01863 004-514-530	1
図書 DOCUMENT			
操作要領書(和) OPERATOR'S GUIDE	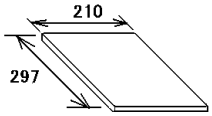	OS*-56490-* 000-152-805 **	1
取扱説明書(和) OPERATOR'S MANUAL	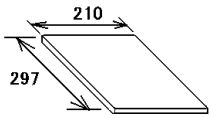	OM*-56490-* 000-152-803 **	1

1.ｺｰﾄﾞ番号末尾の[**]は、選択品の代表ｺｰﾄﾞを表します。
CODE NUMBER ENDING WITH "**" INDICATES THE CODE NUMBER OF REPRESENTATIVE MATERIAL.

(略図の寸法は、参考値です。 DIMENSIONS IN DRAWING FOR REFERENCE ONLY.)

PACKING LIST

NX-7001-AA-J*/E*、NX-7001-BA-J*/E*

NAME	OUTLINE	DESCRIPTION/CODE №	Q'TY
ユニット UNIT			
受信部 RECEIVER UNIT	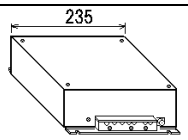	NX-7001-* 000-040-345 **	1
受信部予備品 RECEIVER UNIT SPARE PARTS			
予備品 SPARE PARTS		SP08-02101 004-514-370	1
工事材料 INSTALLATION MATERIALS		**CP08-01860**	
ｹｰﾌﾞﾙ組品 CABLE ASSY.	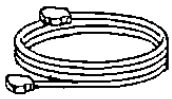	DSUB25P-DSUB25P-3M 000-152-698	1
受信部工材 RECEIVER UNIT INSTALLATION MATERIALS			
工事材料 INSTALLATION MATERIALS	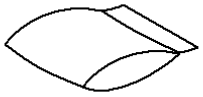	CP08-01864 004-514-540	1
図書 DOCUMENT			
操作要領書(和) OPERATOR'S GUIDE	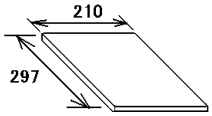	OS*-56490-* 000-152-805 **	1
取扱説明書(和) OPERATOR'S MANUAL	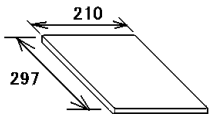	OM*-56490-* 000-152-803 **	1

1.ｺｰﾄﾞ番号末尾の[**]は、選択品の代表ｺｰﾄﾞを表します。
CODE NUMBER ENDING WITH "**" INDICATES THE CODE NUMBER OF REPRESENTATIVE MATERIAL.

(略図の寸法は、参考値です。 DIMENSIONS IN DRAWING FOR REFERENCE ONLY.)

PACKING LIST

08AW-X-9852 -0 1/1

NX-7H-0-10/-10-HK,NX-7H-0-20/-20-HK

NAME	OUTLINE	DESCRIPTION/CODE №	Q'TY
ユニット UNIT			
ｱﾝﾃﾅ ANTENNA	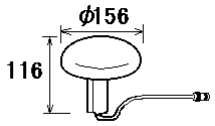	NX-7H* 000-040-214 **	1
工事材料 INSTALLATION MATERIALS		**CP08-01810/01820**	
工事材料 INSTALLATION MATERIALS		CP08-01811 004-514-610	1
ｹｰﾌﾞﾙ組品 CABLE ASSY.	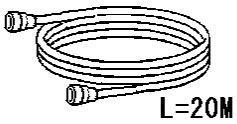	04S4168 *20M* 000-107-019	1 (*)
ｹｰﾌﾞﾙ組品 CABLE ASSY.	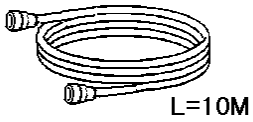	04S4168 *10M* 000-106-821	1 (*)

1.ｺｰﾄﾞ番号末尾の[**]は、選択品の代表ｺｰﾄﾞを表します。
CODE NUMBER ENDING WITH "**" INDICATES THE CODE NUMBER OF REPRESENTATIVE MATERIAL.
2.(*)印のｹｰﾌﾞﾙ組品は選択出来ます。
(*) MARKED CABLES ARE SELECTABLE.

（略図の寸法は、参考値です。 DIMENSIONS IN DRAWING FOR REFERENCE ONLY.）

FURUNO

CODE NO.	004-514-350	08AW-X-9401 -0
TYPE	CP08-01861	1/1

工事材料表

INSTALLATION MATERIALS

番号 NO.	名称 NAME	略図 OUTLINE	型名／規格 DESCRIPTIONS		数量 Q'TY	用途／備考 REMARKS
1	+ﾄﾗｽﾀｯﾋﾟﾝﾈｼﾞ 1種 SELF-TAPPING SCREW	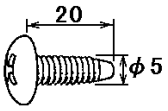	5X20 SUS304		4	
			CODE NO.	000-802-081		

08AW-X-9401

FURUNO ELECTRIC CO.,LTD.

（略図の寸法は、参考値です。 DIMENSIONS IN DRAWING FOR REFERENCE ONLY.）

FURUNO

CODE NO.	004-514-530	08AW-X-9402 -0
TYPE	CP08-01863	1/1

工事材料表

INSTALLATION MATERIALS

番号 NO.	名称 NAME	略図 OUTLINE	型名／規格 DESCRIPTIONS		数量 Q'TY	用途／備考 REMARKS
1	+ﾄﾗｽﾀｯﾋﾟﾝﾈｼﾞ 1種 SELF-TAPPING SCREW	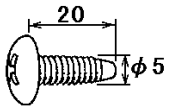	5X20 SUS304		4	
			CODE NO.	000-802-081		
2	ｱﾀﾞﾌﾟﾀ REDUCER(L)	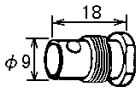	MP-M5A		2	
			CODE NO.	000-108-861		
3	ｱﾀﾞﾌﾟﾀ REDUCER(S)	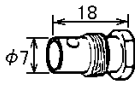	MP-M3A		2	
			CODE NO.	000-108-860		
4	同軸プラグ COAX.PLUG	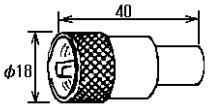	FM-MP-7		2	
			CODE NO.	000-108-859		

08AW-X-9402

FURUNO ELECTRIC CO.,LTD.

（略図の寸法は、参考値です。 DIMENSIONS IN DRAWING FOR REFERENCE ONLY.）

FURUNO

CODE NO.	004-514-540	08AW-X-9403 -0
TYPE	CP08-01864	1/1

工事材料表

INSTALLATION MATERIALS

番号 NO.	名称 NAME	略図 OUTLINE	型名／規格 DESCRIPTIONS		数量 Q'TY	用途／備考 REMARKS
1	+ﾄﾗｽﾀｯﾋﾟﾝﾈｼﾞ 1種 SELF-TAPPING SCREW	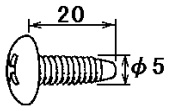	5X20 SUS304		4	
			CODE NO.	000-802-081		
2	同軸プラグ COAX.PLUG	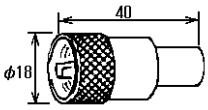	FM-MP-7		1	
			CODE NO.	000-108-859		

08AW-X-9403

FURUNO ELECTRIC CO.,LTD.

（略図の寸法は、参考値です。 DIMENSIONS IN DRAWING FOR REFERENCE ONLY.）

FURUNO

CODE NO.		08AW-X-9407 -0
TYPE		1/1

工事材料表

INSTALLATION MATERIALS

NX-700A/B

番号 NO.	名称 NAME	略図 OUTLINE	型名／規格 DESCRIPTIONS		数量 Q'TY	用途／備考 REMARKS
1	ｹｰﾌﾞﾙ組品 CABLE ASSY.	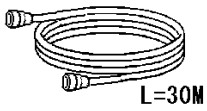	04S4168 *30M*		1	選択 TO BE SELECT
			CODE NO.	000-107-020		
2	ｹｰﾌﾞﾙ組品 CABLE ASSY.	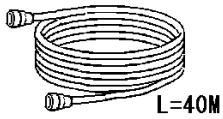	04S4168 *40M*		1	選択 TO BE SELECT
			CODE NO.	000-107-021		
3	ｹｰﾌﾞﾙ組品 CABLE ASSY.	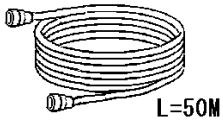	04S4168 *50M*		1	選択 TO BE SELECT
			CODE NO.	000-107-022		

08AW-X-9407

FURUNO ELECTRIC CO.,LTD.

（略図の寸法は、参考値です。 DIMENSIONS IN DRAWING FOR REFERENCE ONLY.）

FURUNO

CODE NO.	004-514-610	08AW-X-9404 -0
TYPE	CP08-01811	1/1

工事材料表

INSTALLATION MATERIALS

番号 NO.	名称 NAME	略図 OUTLINE	型名／規格 DESCRIPTIONS		数量 Q'TY	用途／備考 REMARKS
1	絶縁ﾃｰﾌﾟ SELF-BONDING TAPE	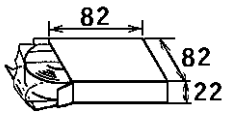	Uﾃｰﾌﾟ 0.5X19X5M		1	
			CODE NO.	000-800-985		

08AW-X-9404

FURUNO ELECTRIC CO.,LTD.

（略図の寸法は、参考値です。 DIMENSIONS IN DRAWING FOR REFERENCE ONLY.）

FURUNO

CODE NO.	004-514-370	08AW-X-9301 -0 1/1
TYPE	SP08-02101	BOX NO. P

SHIP NO.	SPARE PARTS LIST FOR	U S E	SETS PER VESSEL

ITEM NO.	NAME OF PART	OUTLINE	DWG. NO. OR TYPE NO.	QUANTITY WORKING PER SET	QUANTITY WORKING PER VES	QUANTITY SPARE	REMARKS/CODE NO.
1	ﾋｭｰｽﾞ FUSE	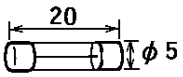	FGMB 2A 125V			1	000-103-165

MFR'S NAME	FURUNO ELECTRIC CO.,LTD.	DWG NO.	08AW-X-9301	1/1

(略図の寸法は、参考値です。 DIMENSIONS IN DRAWING FOR REFERENCE ONLY.)

FURUNO

表 1 TABLE 1

寸法区分（mm）DIMENSIONS	公差（mm）TOLERANCE
L≦50	±1.5
50<L≦100	±2.5
100<L≦500	±3

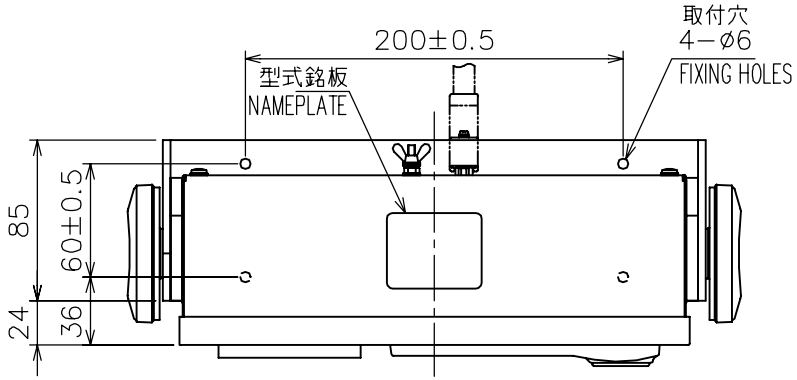

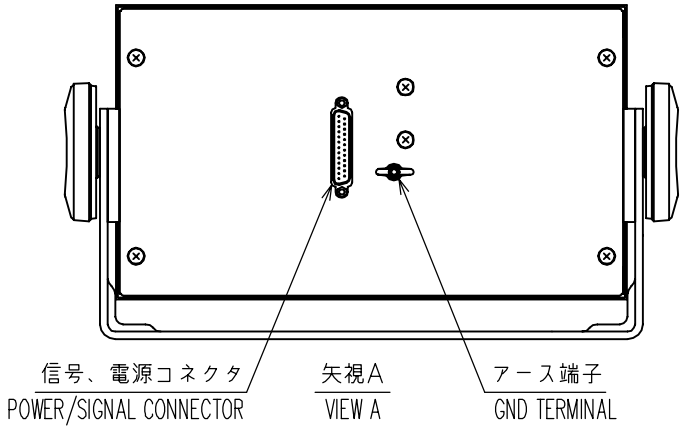

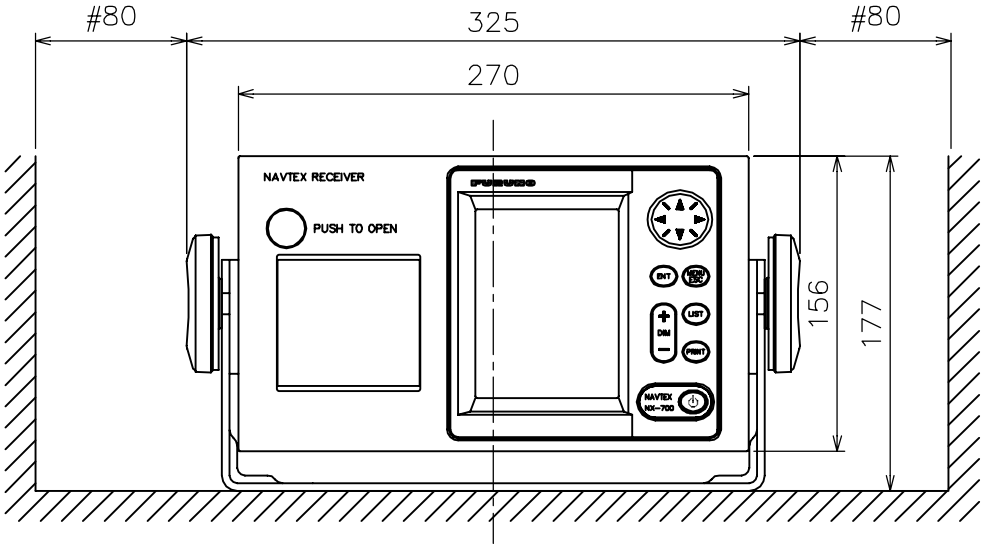

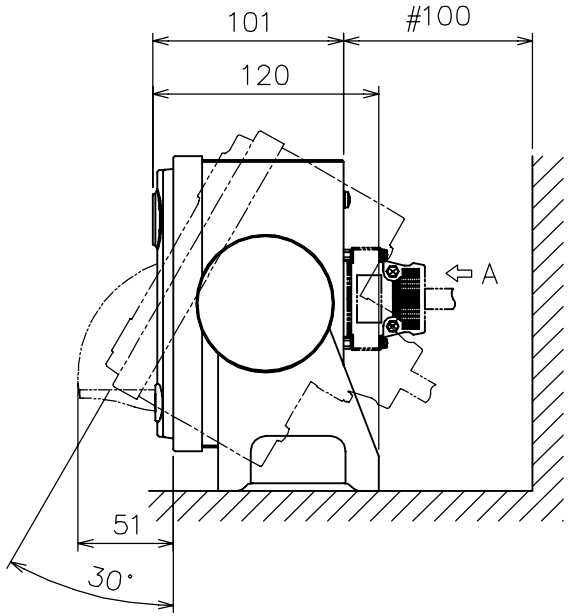

注　記　1）＃印寸法は最小サービス空間寸法とする。
　　2）指定外の寸法公差は表１による。
　　3）取付用ネジはトラスタッピンネジ呼び径５×２０を使用のこと。

NOTE　1. #: MINIMUM SERVICE CLEARANCE.
　　2. TABLE 1 INDICATES TOLERANCE OF DIMENSIONS WHICH IS NOT SPECIFIED.
　　3. USE SELF-TAPPING SCREWS 5x20 FOR FIXING THE UNIT.

DRAWN MAY 16, '05 E.MIYOSHI		TITLE	NX-700A
CHECKED T.TAKAHASHI		名称	指示部（卓上装備、プリンタ組込型）
APPROVED	NX-700		外寸図
SCALE 1/4 MASS 3.3 ±10% kg		NAME	DISPLAY UNIT (TABLETOP MOUNT W/ PRINTER)
DWG.No. C5649-G01-B	08-023-100G-2		OUTLINE DRAWING

FURUNO ELECTRIC CO., LTD.

D-1

FURUNO

表 1 TABLE 1

寸法区分（mm） DIMENSIONS	公差（mm） TOLERANCE
L≦50	±1.5
50<L≦100	±2.5
100<L≦500	±3

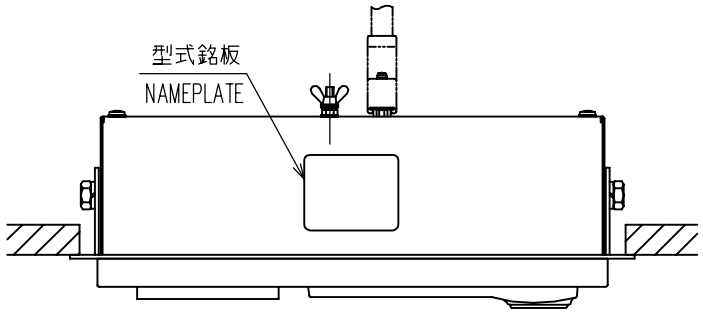

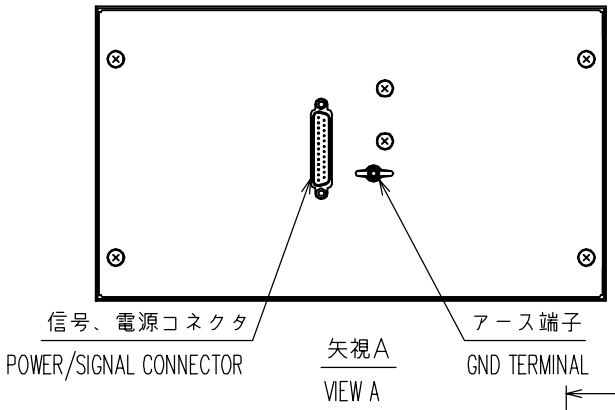

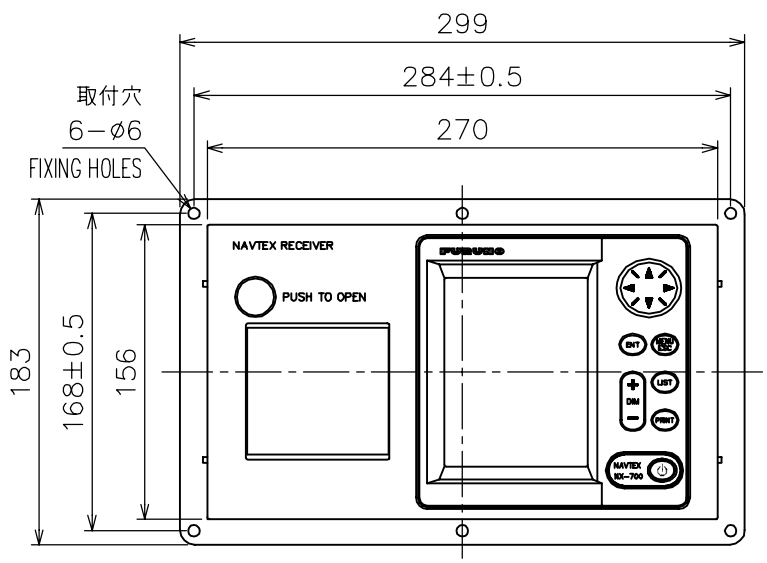

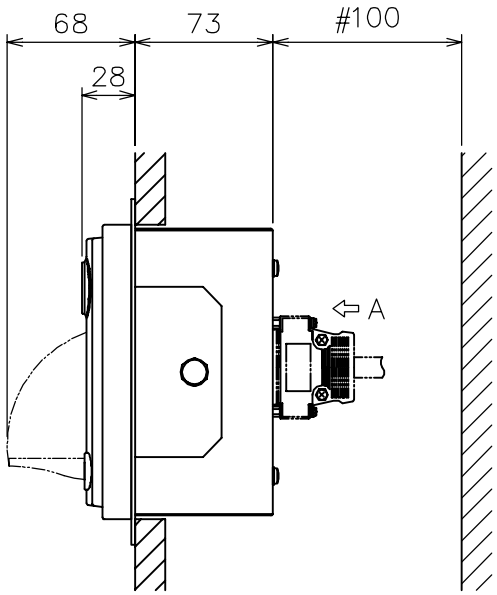

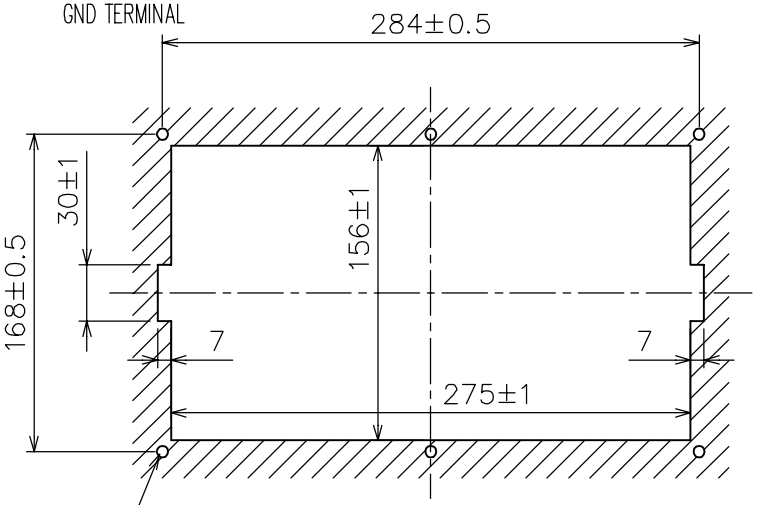

注　記　1）＃印寸法は最小サービス空間寸法とする。
　　2）指定外の寸法公差は表１による。
　　3）取付用ネジはトラスタッピンネジ呼び径５×２０を使用のこと。

NOTE
1. #: MINIMUM SERVICE CLEARANCE.
2. TABLE 1 INDICATES TOLERANCE OF DIMENSIONS WHICH IS NOT SPECIFIED.
3. USE SELF-TAPPING SCREWS 5 x 20 FOR FIXING THE UNIT.

DRAWN Mar. 29, '05 E.MIYOSHI			TITLE NX-700A
CHECKED T.TAKAHASHI			名称 指示部(埋込装備、プリンタ組込型)
APPROVED Y. Hatai	NX-700		外寸図
SCALE 1/4	MASS 3.1 ±10% kg		NAME DISPLAY UNIT (FLUSH MOUNT W/ PRINTER)
DWG.No. C5649-G04-A		08-023-110G-4	OUTLINE DRAWING

FURUNO ELECTRIC CO., LTD.

D-2

FURUNO

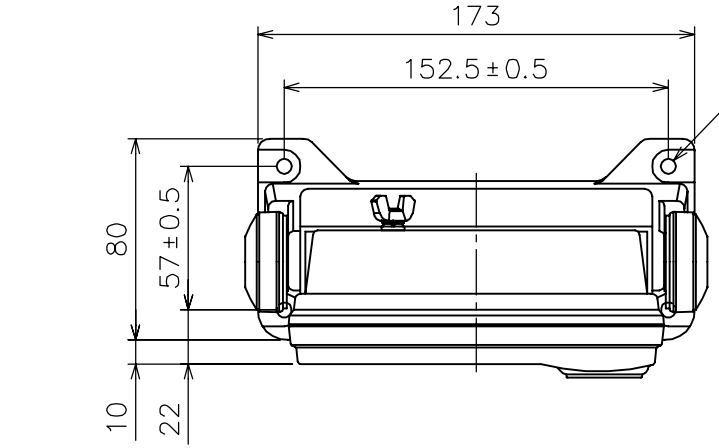

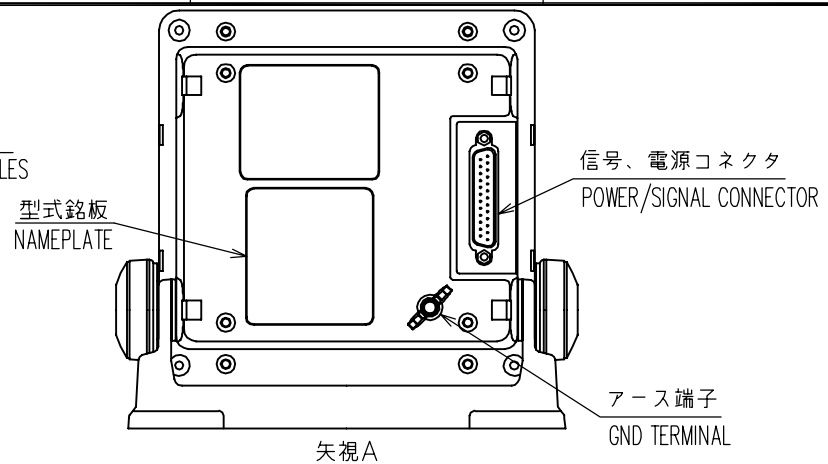

表 1 TABLE 1

寸法区分（mm） DIMENSIONS	公差（mm） TOLERANCE
L≦50	±1.5
50<L≦100	±2.5
100<L≦500	±3

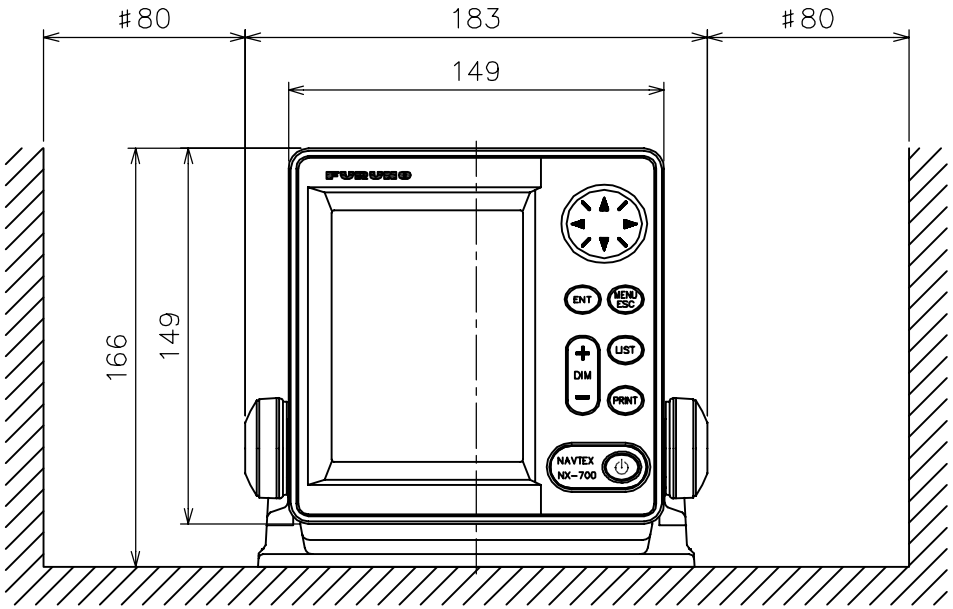

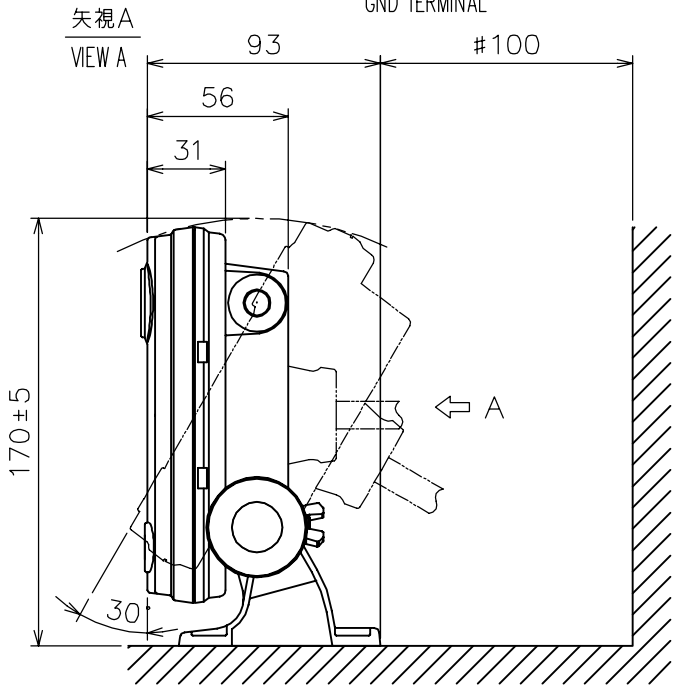

注　記　1）＃印寸法は最小サービス空間寸法とする。
　　2）指定外の寸法公差は表１による。
　　3）取付用ネジはトラスタッピンネジ呼び径５×２０を使用のこと。

NOTE　1. #: MINIMUM SERVICE CLEARANCE.
　　2. TABLE 1 INDICATES TOLERANCE OF DIMENSIONS WHICH IS NOT SPECIFIED.
　　3. USE SELF-TAPPING SCREWS 5 x 20 FOR FIXING THE UNIT.

DRAWN MAY 16, '05 E.MIYOSHI			TITLE NX-700B
CHECKED T.TAKAHASHI			名称 指示部(卓上装備、LCD単体型)
APPROVED	NX-700		外寸図
SCALE 1/3 MASS 0.7 ±10% kg			NAME DISPLAY UNIT (TABLETOP MOUNT W/O PRINTER)
DWG.No. C5649-G05-B	08-023-200G-1		OUTLINE DRAWING

FURUNO ELECTRIC CO., LTD.

FURUNO

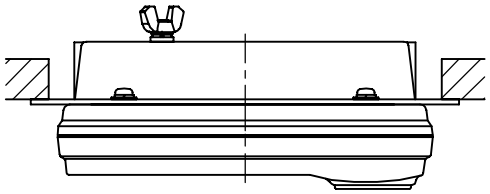

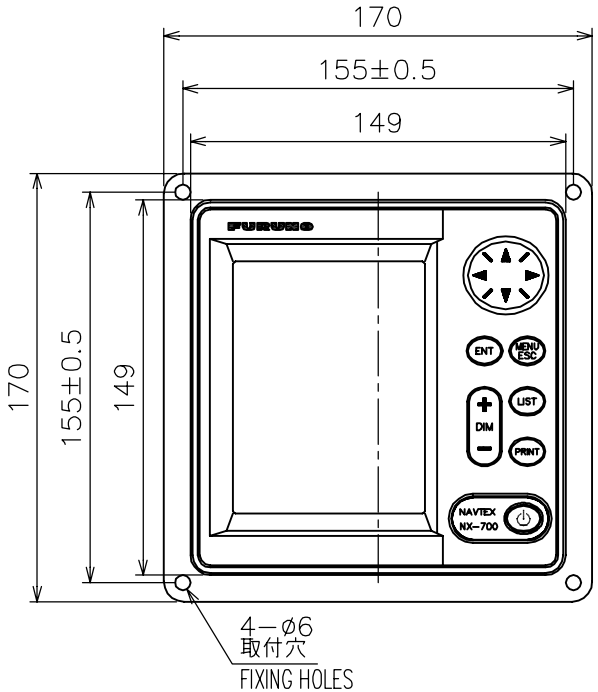

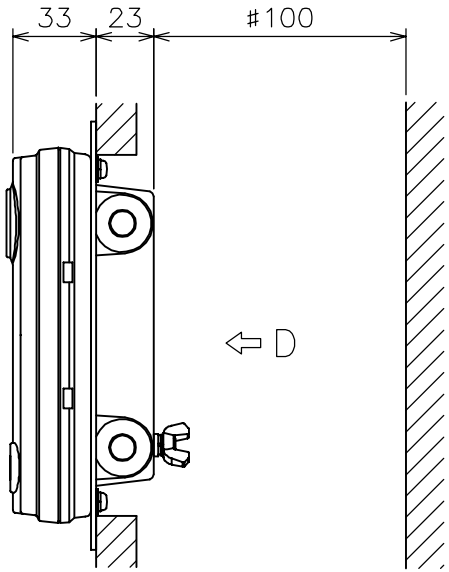

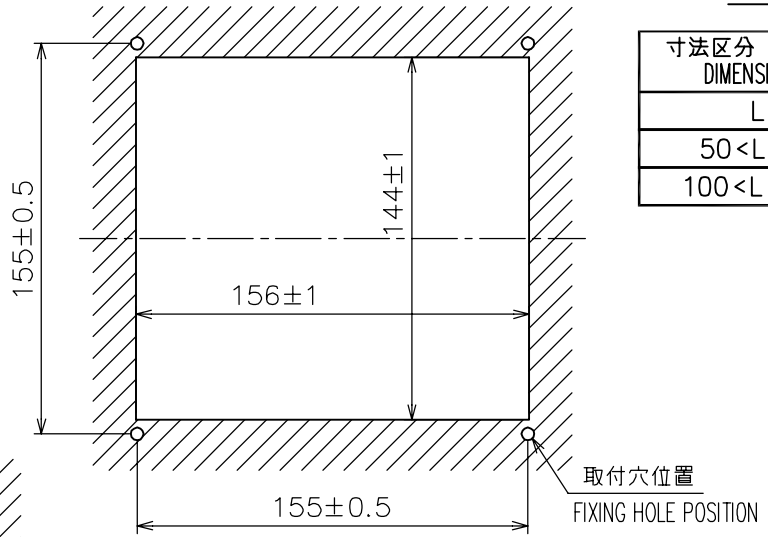

取付穴寸法図（参考図）
CUTOUT DIMENSIONS

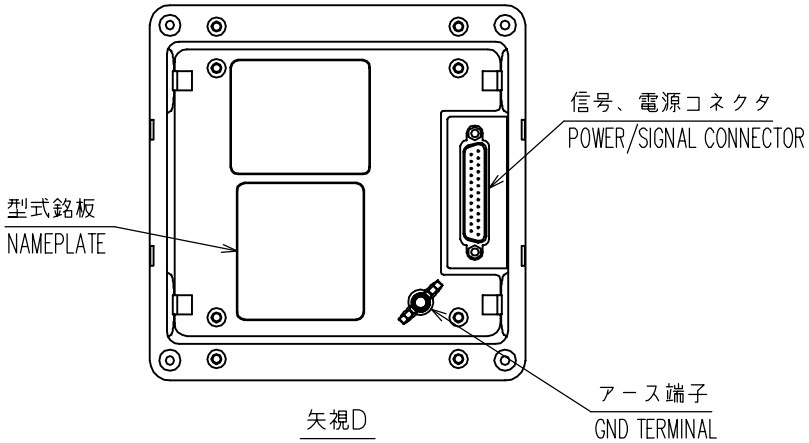

矢視D
VIEW D

表 1 TABLE 1

寸法区分（mm）DIMENSIONS	公差（mm）TOLERANCE
L≦50	±1.5
50<L≦100	±2.5
100<L≦500	±3

注　記　1）　指定外の寸法公差は表１による。
　　2）　＃印寸法は最小サービス空間寸法とする。
　　3）　取付用ネジはトラスタッピンネジ呼び径５×２０を使用のこと。

NOTE　1.　TABLE 1 INDICATES TOLERANCE OF DIMENSIONS WHICH IS NOT SPECIFIED.
　　2.　#: MINIMUM SURVICE CLEARANCE.
　　3.　USE SELF-TAPPING SCREWS 5x20 FOR FIXING THE UNIT.

DRAWN MAY 16, '05 E.MIYOSHI			TITLE NX-700B
CHECKED T.TAKAHASHI			名称 指示部（埋込装備、LCD単体型）
APPROVED	NX-700		外寸図
SCALE 1/3 MASS 0.7 ±10% kg			NAME DISPLAY UNIT (FLUSH MOUNT W/O PRINTER)
DWG.No. C5649-G07-B	08-023-220G-1		OUTLINE DRAWING

FURUNO ELECTRIC CO., LTD.

FURUNO

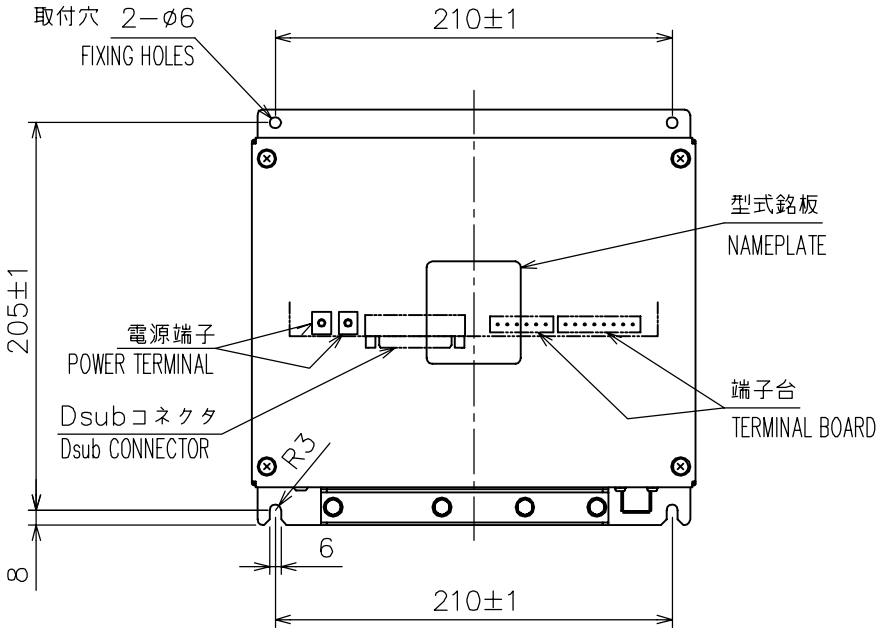

表 1 TABLE 1

寸法区分（mm）DIMENSIONS	公差（mm）TOLERANCE
L≦50	±1.5
50<L≦100	±2.5
100<L≦500	±3

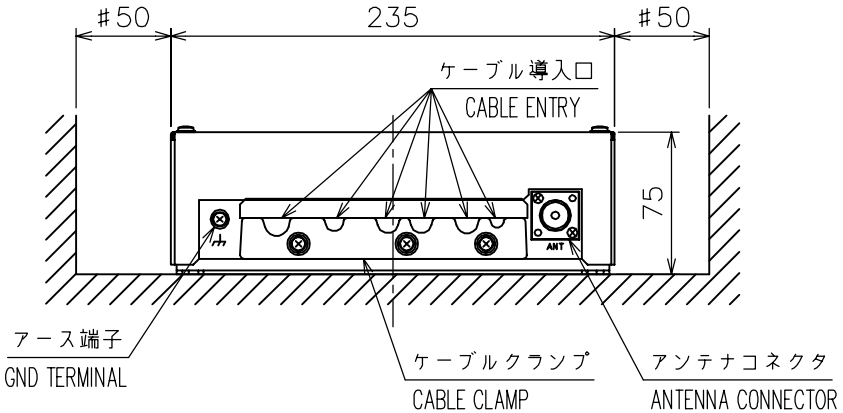

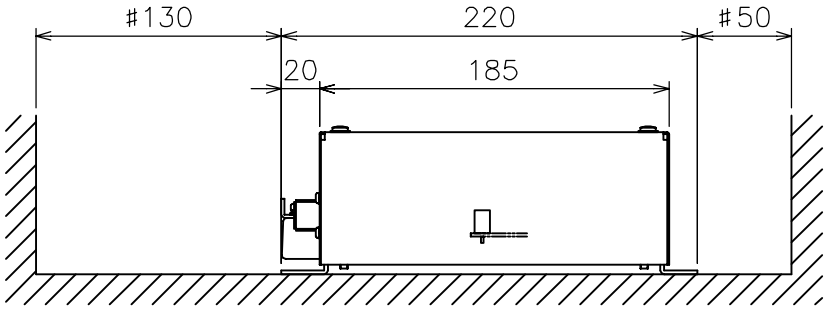

注　記

1）＃印寸法は最小サービス空間寸法とする。

2）指定外の寸法公差は表１による。

3）取付用ネジはトラスタッピンネジ呼び径５×２０を使用のこと。

NOTE

1. #: MINIMUM SERVICE CLEARANCE.
2. TABLE 1 INDICATES TOLERANCE OF DIMENSIONS WHICH IS NOT SPECIFIED.
3. USE SELF-TAPPING SCREWS 5x20 FOR FIXING THE UNIT.

DRAWN Mar. 25, '05 E.MIYOSHI			TITLE NX−7001
CHECKED T.TAKAHASHI			名称 受信部
APPROVED Y. Hatai	NX-700		外寸図
SCALE 1/4 MASS 2.0 ±10% kg			NAME RECEIVER UNIT
DWG.No. C5649−G03−A	08−023−300G−1		OUTLINE DRAWING

FURUNO

A)マストへの取付け　MAST MOUNTING

a)マスト取付金具CP20-01111(工事材料)でマストに固定する。
USE MAST MOUNTING KIT CP20-01111.

b)パイプのみを使うとき
USE A PIPE ONLY.

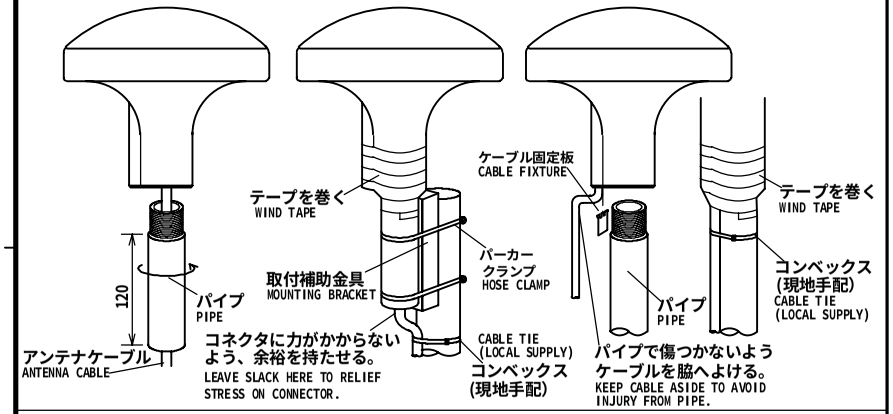

B)スタンションやパルピットにつけるとき　HANDRAIL MOUNTING

レール用アンテナベース No.13-RC5160（取付可能レール直径：φ19～φ32）
(コード番号：000-806-114)

USE HANDRAIL MOUNTING BASE No.13-RC5160
(CODE No.000-806-114, OPTION).
THE DIAMETER OF THE HANDRAIL MAY BE FROM
φ19mm TO φ32mm.

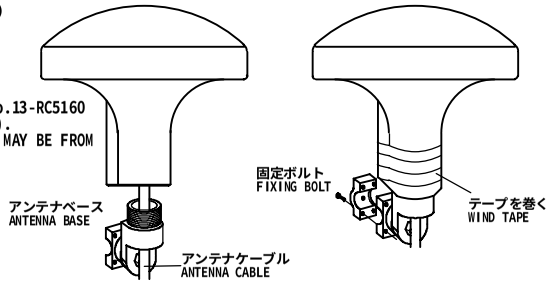

注記 1) パイプ(アンテナベース)はアンテナユニットにねじ込んだ後に固定する。
2) アンテナを固定するときはパイプ（アンテナベース）をアンテナにねじ込むこと。
アンテナ側をねじるとコネクタ部やケーブルに無理がかかり、故障の原因となる。

NOTE 1. FASTEN PIPE(ANTENNA BASE) TO ANTENNA UNIT FIRST THEN FIX THEM TO MAST OR HANDRAIL.
2. WHEN FIXING ANTENNA, TURN PIPE OR ANTENNA BASE; NOT THE ANTENNA.
TURNING THE ANTENNA MAY TWIST THE CABLE AND PLACE STRESS ON CONNECTOR.

C)取付ける場所が傾斜しているとき　ANTENNA BASE MOUNTING

オプションのアンテナベースを使う。
USE OPTIONAL ANTENNA BASE No.13-QA330/QA310.

傾斜 INCLINATION	-5° - 33°	32° - 65°	65° - 98°
装備方法 MOUNTING METHOD	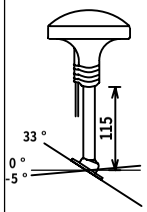	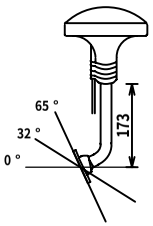	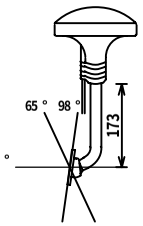
アンテナベース型式 ANTENNA BASE TYPE	直型アンテナベース RIGHT ANGLE ANTENNA BASE No.13-QA330	L型アンテナベース L-TYPE ANTENNA BASE No.13-QA310	
コード番号 CODE No.	000-803-239	000-803-240	

アンテナベース基部
MOUNTING DIMENSIONS OF ANTENNA BASE

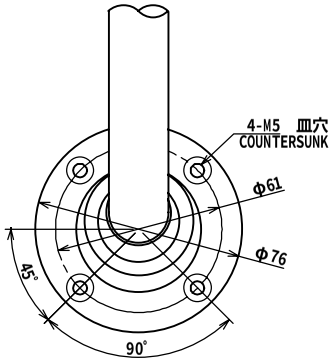

取付場所 MOUNTING LOCATION

THE FIGURE BELOW SHOWS THE RECOMMENDED SEPARATION DISTANCES FROM OTHER ANTENNAS TO AVOID MUTUAL INTERFERENCE.

他の機器のアンテナから下の図の距離以上離す。

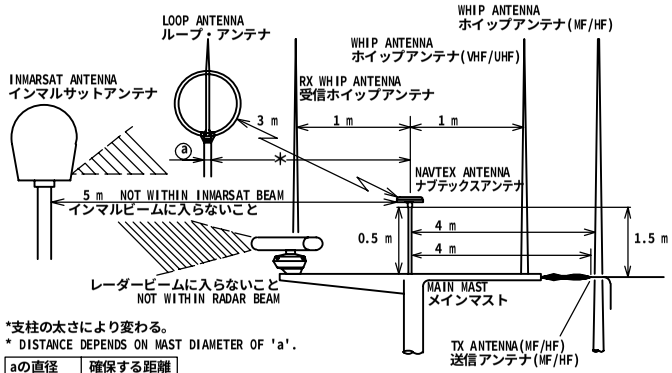

*支柱の太さにより変わる。
* DISTANCE DEPENDS ON MAST DIAMETER OF 'a'.

aの直径 DIA. OF 'a'	確保する距離 DISTANCE (MIN.)
10 cm	1.5 m
30 cm	3 m

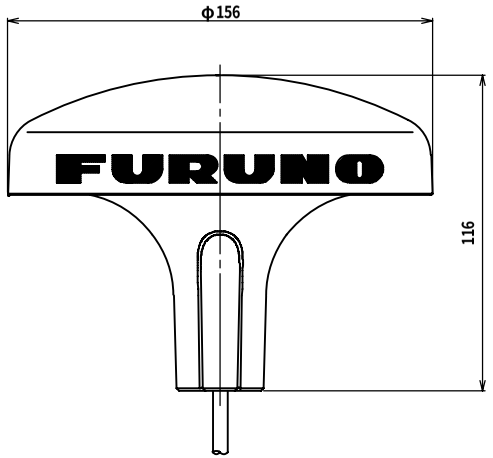

表 1　TABLE 1

寸法区分(mm) DIMENSIONS	公差(mm) TOLERANCE
0 ＜ L ≦ 50	±1.5
50 ＜ L ≦ 100	±2.5
100 ＜ L ≦ 500	±3

1-14UNS1B
ねじ山数(25.4mmにつき)：　14
ピッチ：　1.8143 mm
オネジ有効長さ：　15.17 mm
オネジ有効径：　24.17 mm

THREAD PER 25.4mm (1 INCH): 14
PITCH: 1.8143 mm
THREAD LENGTH: 15.17 mm
PITCH DIAMETER: 24.17 mm

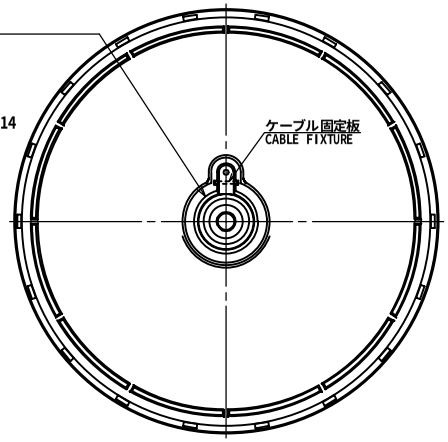

注記　1）指定なき寸法公差は表１による。

NOTE　1. TABLE 1 INDICATES TOLERANCE OF DIMENSIONS.

DRAWN MAY 16, '05	E.MIYOSHI		TITLE NX-3H-D/NX-7H
CHECKED	TAKAHASHI.T		名称 空中線部
APPROVED		NX-700 NX-300	外寸図
SCALE 1/2	MASS ±10% 0.94 kg	MASS W/ 10m CABLE. 質量は10mケーブルを含む。	NAME ANTENNA UNIT
DWG. No. C5629-G05- E		08-021-310G- 1	OUTLINE DRAWING

D-6

FURUNO ELECTRIC CO., LTD.

FURUNO

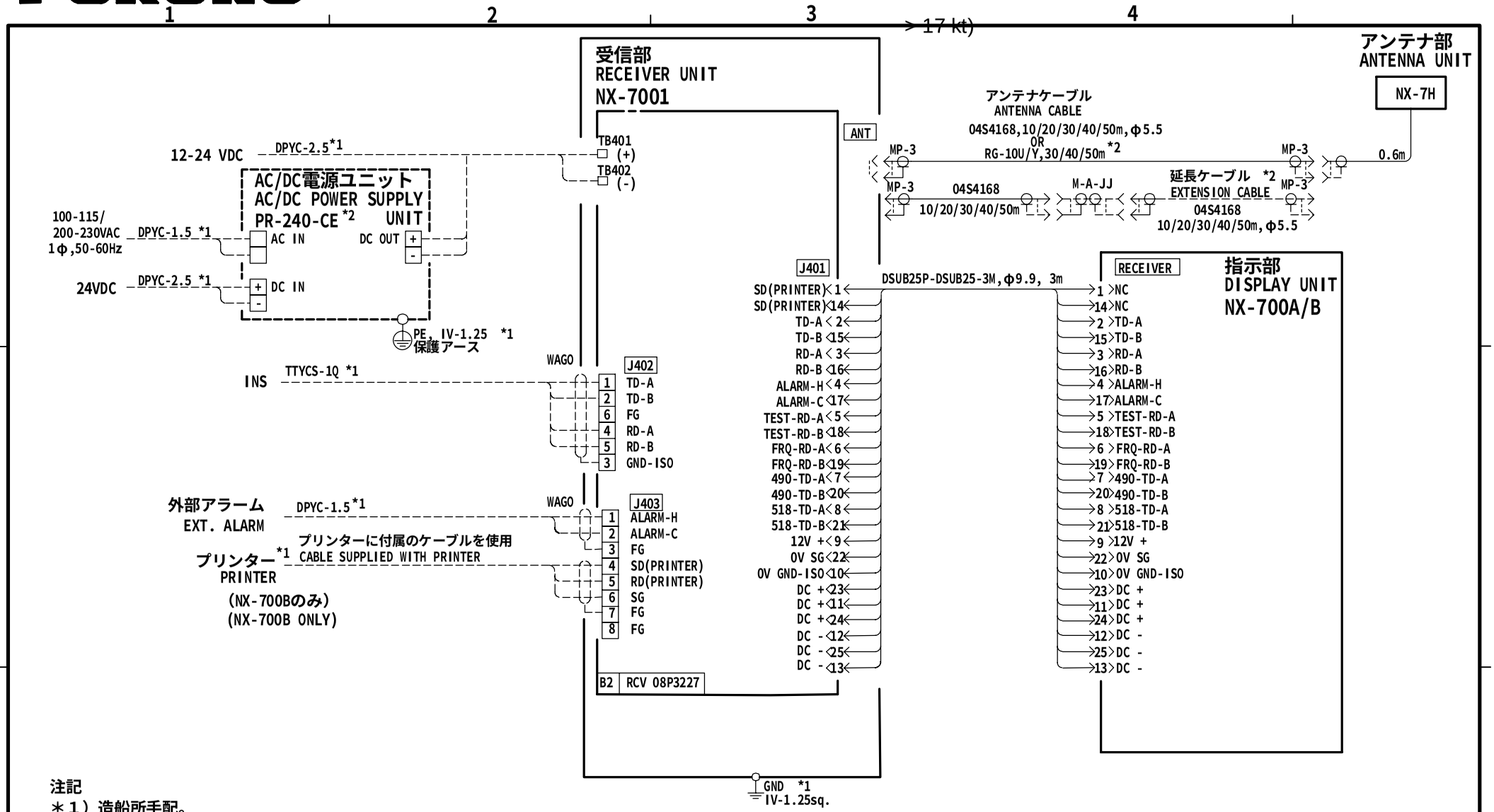

注記
＊1）造船所手配。
＊2）オプション。

NOTE
*1. SHIPYARD SUPPLY.
*2. OPTION.

DRAWN		TITLE	NX-700A/B
CHECKED		名 称	ナブテックス受信機
APPROVED			相互結線図
SCALE / MASS		NAME	NAVTEX RECEIVER
DWG.No. C5649-C01-A			INTERCONNECTION DIAGRAM

FURUNO ELECTRIC CO., LTD.

ECF
(Elemental Chlorine Free)
The paper used in this manual
is elemental chlorine free.

© FURUNO ELECTRIC CO., LTD.

9-52 Ashihara-cho,
Nishinomiya 662-8580, JAPAN

Telephone : 0798-65-2111
Fax : 0798-65-4200

Your Local Agent/Dealer

All rights reserved.

Printed in Japan

FIRST EDITION : 0000
Z1 MAY. 20, 2005

Pub. No. OME-56490

(HIMA) NX-700

00015280400

OME56490Z00