FURUNO

Installation Manual
CHART RADAR
Model FAR-3230S-SSD(-BB)/FAR-3330S-SSD

(Product name: MARINE RADAR)

SAFETY INSTRUCTIONS i
SYSTEM CONFIGURATION iii
EQUIPMENT LISTS vi

1. INSTALLATION 1-1
1.1 Antenna Unit 1-1
1.2 Monitor Unit 1-8
1.3 Radar Control Unit, Trackball Control Unit 1-8
1.4 Power Supply Unit (PSU-016/PSU-018) 1-11
1.5 Processor Unit 1-12
1.6 Sensor Adapter MC-3000S/3010A/3020D/3030D (option) 1-13
1.7 Intelligent Hub HUB-3000 (option) 1-14
1.8 Switching Hub HUB-100 (option) 1-16

2. WIRING 2-1
2.1 Overview 2-1
2.2 Antenna Unit 2-3
2.3 Processor Unit 2-10
2.4 Power Supply Unit 2-21
2.5 Monitor Unit 2-25
2.6 Sensor Adapters (option) 2-26
2.7 LAN Signal Converter Kit (option) 2-43
2.8 Intelligent Hub HUB-3000 (option) 2-47
2.9 How to Extend the Control Unit Cable (option) 2-48

3. SETTINGS AND ADJUSTMENTS 3-1
3.1 How to Access the Radar Installation Menu 3-1
3.2 How to Align the Heading 3-1
3.3 How to Adjust the Sweep Timing 3-2
3.4 How to Suppress Main Bang 3-3
3.5 Dual Radar Display 3-3
3.6 Other Settings 3-6

4. INPUT/OUTPUT DATA 4-1
4.1 Processor Unit 4-1
4.2 IEC 61162 Sentences 4-2

APPENDIX 1 JIS CABLE GUIDE AP-1
APPENDIX 2 ROD TERMINALS AP-2
APPENDIX 3 DIGITAL INTERFACE AP-7

PACKING LISTS A-1
OUTLINE DRAWINGS D-1
INTERCONNECTION DIAGRAM S-1

FURUNO ELECTRIC CO., LTD.

www.furuno.com

All brand and product names are trademarks, registered trademarks or service marks of their respective holders.

ECF
(Elemental Chlorine Free)
The paper used in this manual
is elemental chlorine free.

FURUNO ELECTRIC CO., LTD.

9-52 Ashihara-cho,
Nishinomiya, 662-8580, JAPAN

・FURUNO Authorized Distributor/Dealer

All rights reserved.

Printed in Japan

A : APR. 2014
C : OCT. 15, 2014

Pub. No. IME-36190-C

(AKMU) FAR-3230S-SSD

0001780351 2

SAFETY INSTRUCTIONS

The operator and installer must read the applicable safety instructions before attempting to install or operate the equipment.

DANGER	Indicates a potentially hazardous situation which, if not avoided, will result in death or serious injury.
WARNING	Indicates a potentially hazardous situation which, if not avoided, could result in death or serious injury.
CAUTION	Indicates a potentially hazardous situation which, if not avoided, can result in minor or moderate injury.

Warning, Caution Prohibitive Action Mandatory Action

DANGER

Wear a safety belt and hard hat when working on the antenna unit.

Serious injury or death can result if someone falls from the radar antenna mast.

WARNING

Radio Frequency Radiation Hazard

The radar antenna emits electromagnetic radio frequency (RF) energy which can be harmful, particularly to your eyes. Never look directly into the antenna aperture from a close distance while the radar ius in operation or eexpose yourself to the transmitting antenna at a close distance. Distances at which RF radiation level of 100, 50 and 10 W/m^2 are given in the table below.

Note: If the antenna unit is installed at a close distance in front of the wheel house, your administration may require halt of transmission within a certain sector of antenna revolution. This is possible. Ask your FURUNO representive or dealer to provide this feature.

Model	Transceiver	Antenna	100 W/m^2	50 W/m^2	10 W/m^2
FAR-3230S-SSD(-BB) FAR-3330S-SSD	RTR-111 (S-250W)	SN36CF (12 ft)	N/A	N/A	1.0 m

⚠ WARNING

ELECTRICAL SHOCK HAZARD

Do not open the equipment unless totally familiar with electrical circuits and service manual.

Only qualified personnel are allowed to work inside the equipment.

Construct a suitable service platform from which to install the antenna unit.
Serious injury or death can result if someone falls from the radar antenna mast.

Turn off the power at the mains switchboard before beginning the installation.
Fire, electrical shock or serious injury can result if the power is left on or is applied while the equipment is being installed.

Be sure that the power supply is compatible with the voltage rating of the equipment.
Connection of an incorrect power supply can cause fire or damage the equipment.

Use only the specified power cable.
Fire or damage to the equipment can result if a different cable is used.

Do not install the monitor unit, processor unit, power supply unit (PSU), or control unit in a dusty environment, or one where the units may get wet from rain or water splash.
Dust or water in the units can result in fire, electrical shock, or damage to the equipment.

Attach protective earth securely to the ship's body.
The protective earth (grounding) is required for the AC power supply to prevent electrical shock.

⚠ CAUTION

Observe the following compass safe distances to prevent deviation of a magnetic compass:

	Type	Standard compass	Steering compass
Antenna Unit	RSB-133	1.90 m	1.20 m
Processor Unit	EC-3000	2.40 m	1.55 m
Monitor Unit	MU-190	1.65 m	1.05 m
	MU-231	0.85 m	0.55 m
Power Supply Unit	PSU-016	1.90 m	1.20 m
	PSU-018	1.80 m	1.15 m
ECDIS Control Unit	RCU-024	0.30 m	0.30 m
Radar Control Unit	RCU-025	0.30 m	0.30 m
Trackball Control Unit	RCU-026	0.30 m	0.30 m
Switching Hub	(HUB-100)	1.00 m	0.60 m
Intelligent HUB	HUB-3000	1.20 m	0.75 m
Sensor Adapter	MD-3000S	2.05 m	1.35 m
	MD-3010A	0.75 m	0.50 m
	MD-3020D	1.05 m	0.70 m
	MD-3030D	0.90 m	0.60 m

Note: For more information, please refer to IMO SN/Circ.271 “Guidelines for the installation of shipborne radar equipment.”

SYSTEM CONFIGURATION

NOTICE

The radar(s) must be interconnected to the following type approved sensors:

- **Gyrocompass meeting the requirements of the IMO resolution A.424(XI).**
- **EPFS meeting the requirements of the IMO resolution MSC.112(73).**
- **SDME meeting the requirements of IMO resolution MSC.96(72).**

The radar may be interconnected via HUB-3000 to other FURUNO processing units having approved LAN ports.

Basic configuration is shown with solid line.

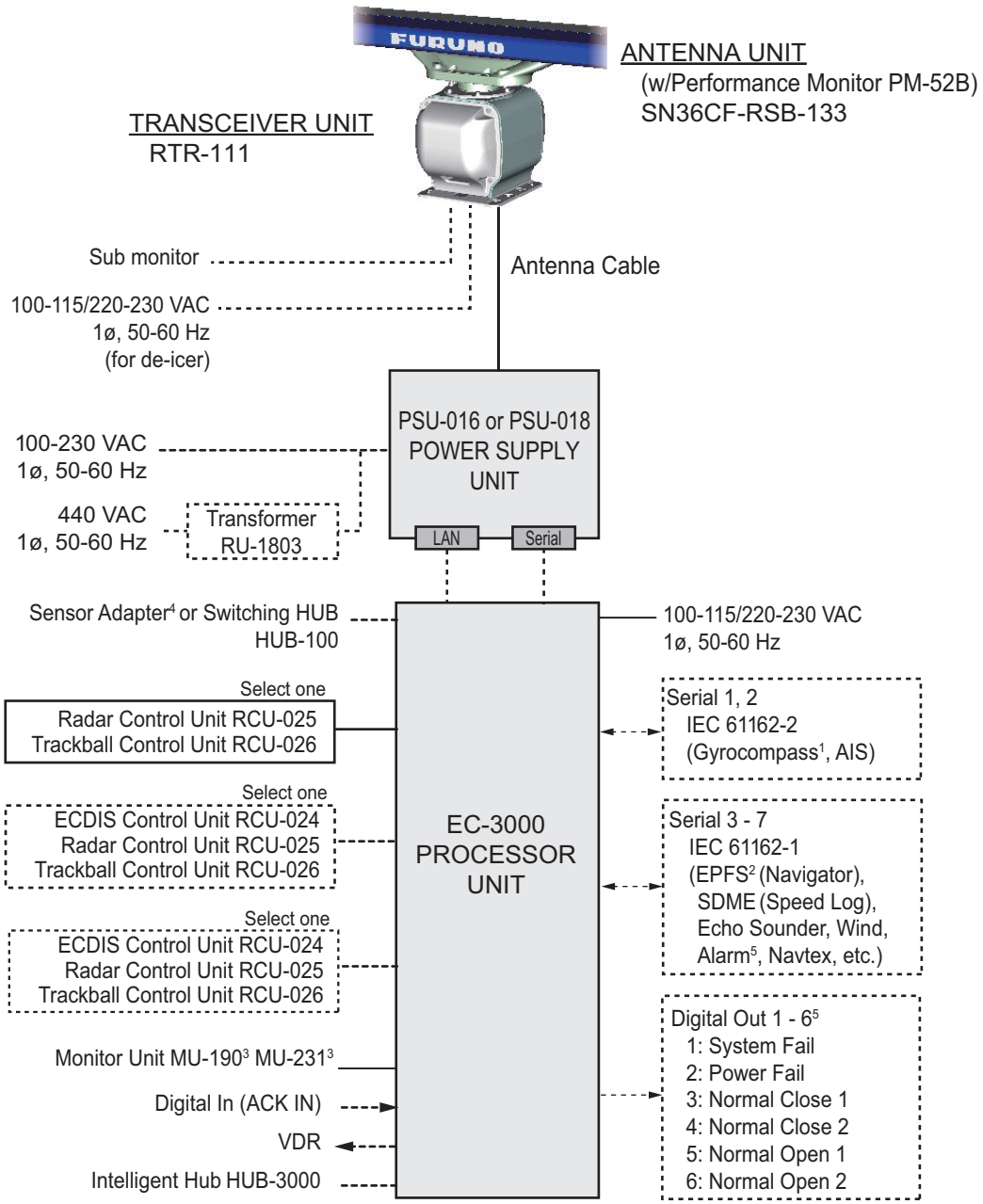

*: See the notes on page iv.

Category of units

Antenna units: Exposed to the weather
Other units: Protected from the weather

Notes

1. The gyrocompass must be type approved for compliance with IMO resolution A.424(XI) (and/or resolution A.821(19) for installation on HSC). The gyrocompass must also have an update rate that is adequate for the ship's rate of turn. The update rate must be better than 40 Hz (HSC) or 20 Hz (conventional vessel).
2. The EPFS must be type approved for compliance with IMO resolution MSC.96(72).
3. These monitors have been approved by the IMO, MU-190 for CAT 2C and CAT 2HC, MU-231 for CAT 1C and CAT 1HC. If a different monitor is to be used on IMO vessels, its effective diameter must meet the applicable Category requirements:
   - CAT 1C and CAT 1HC: effective diameter 320 mm or higher
   - CAT 2C and CAT 2HC: effective diameter 250 mm or higher

   For installation, operation and viewing distance of other monitor, see its manuals.
   For BB type, a monitor unit is prepared by user.
4. The sensor adapters are Control Serial MC-3000S, Analog IN MC-3010A, Digital IN MC-3020D and Digital OUT MC-3030D.
5. Characteristics of contact output for Alarm:
   - (Load current) 250 mA
   - (Polarity) Normally Open: 2 ports, Normally Close: 2 ports
   - Serial I/O for alarm is also possible, which complies with IEC 61162-1.

Interswitch connection

When multiple radars are used, connect, to the EC-3000, the HUB-3000 to the LAN1 port, and HUB-100 to the LAN2 port. This configuration lets each radar as a standalone radar in case of HUB malfunction.

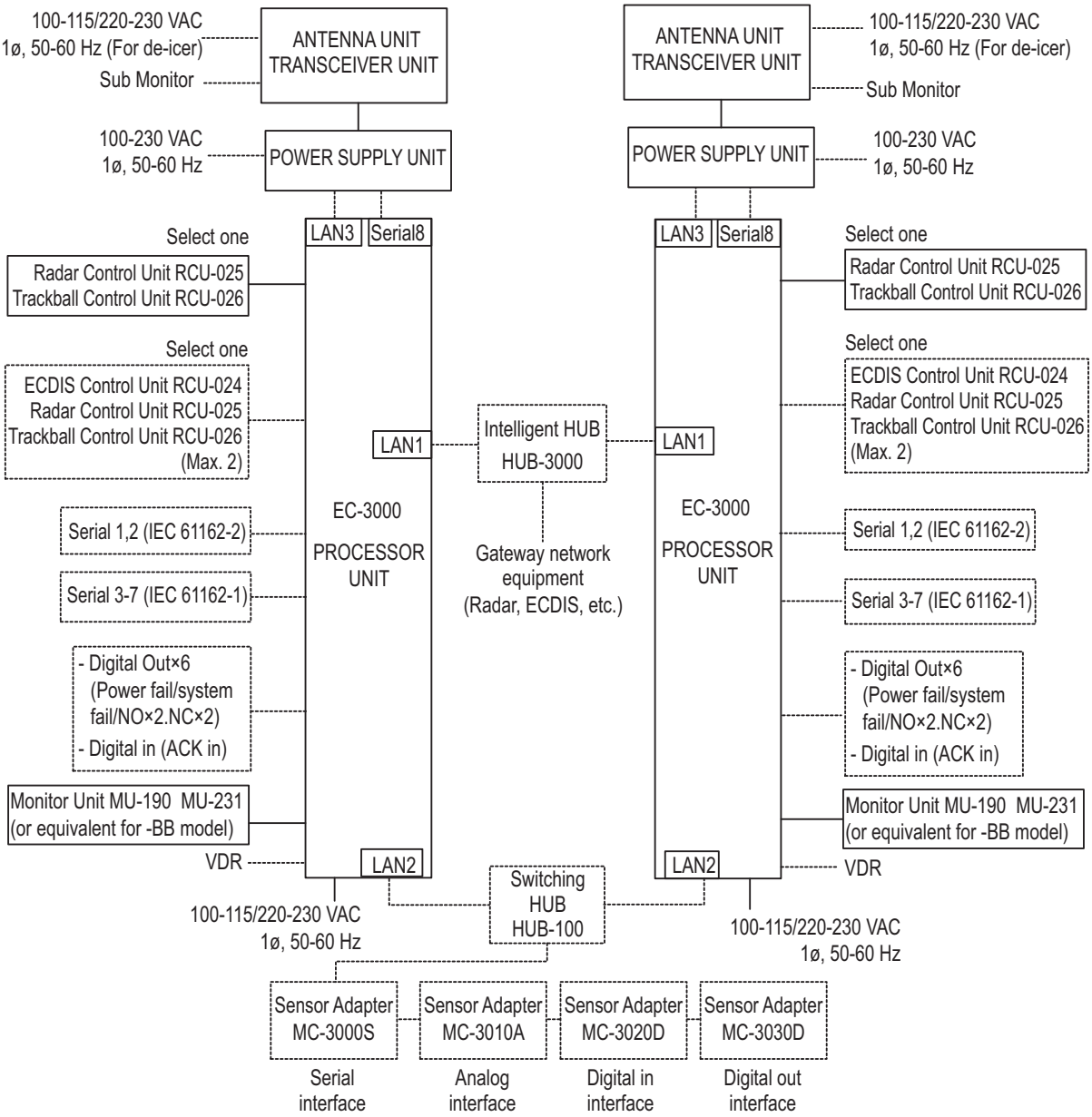

Radar Component Combinations

RADAR MODEL	ANTENNA UNIT	TRANSCEIVER UNIT	POWER SUPPLY UNIT
FAR-3x10 FAR-3x20	XN12CF-RSB-128 XN20CF-RSB-128 XN24CF-RSB-128	RTR-105	PSU-014
		RTR-106	
FAR-3x20W	XN20CF-RSB-130 XN24CF-RSB-130	RTR-108	
FAR-3x30S	SN36CF-RSB-129	RTR-107	PSU-014 PSU-015
FAR-3x30SW	SN36CF-RSB-131	RTR-109	
FAR-3x30S-SSD	SN36CF-RSB-133	RTR-111	PSU-016 PSU-018

EQUIPMENT LISTS

Standard Supply

Name	Type	Code No.	Qty	Remarks
Antenna Unit	SN36CF-RSB133-111	-	1	
Control Unit	RCU-025	-	Select one	Standard type
	RCU-026	-		Trackball type
Power Supply Unit	PSU-016	-	Select one	For 24rpm
	PSU-018	-		For 42rpm
Processor Unit	EC-3000	-	1	
Monitor Unit	MU-190	-	Select one	For FAR-3230S-SSD
	MU-231	-		For FAR-3330S-SSD
Installation Materials	CP03-35202	001-249-880	1	For antenna
	CP03-35402	001-255-430	1	For RSB
	CP03-35404	001-270-080	1	For RSB (w/de-icer)
	CP03-35500	000-024-096	Select one	15 m cable
	CP03-35510	000-024-097		30 m cable
	CP03-35520	000-024-098		40 m cable
	CP03-35530	000-024-099		50 m cable
	CP03-35301	001-249-770	1	For PSU-016/018
	CP24-02120	000-024-925	1	For EC-3000
	CP24-02200	000-022-508	1	For RCU-025
	CP24-02300	000-022-509	1	For RCU-026
Accessories	FP24-00603	001-285-760	1	For EC-3000
	FP24-00701	001-170-820	1	For RCU-025
	FP24-00801	001-170-920	1	For RCU-026
Spare Parts	SP24-00601	001-170-660	1	For EC-3000, Fuse: FGMB 125V 10A PBF (000-157-470-10, 3 pcs.)
	SP24-00602	001-170-670	1	For EC-3000, Fuse: FGMB 250V 5A PBF (000-157-570-10, 3 pcs.)
	SP03-17661	001-249-420	1	For PSU-016, Fuse: FGBO 250V 5A PBF (000-155-840-10, 2 pcs.)
	SP03-17651	001-249-750	1	For PSU-018, Fuse: FGBO 250V 7A PBF (000-178-084-10, 2 pcs.), FGBO 250V 3A PBF (000-155-841-10, 2 pcs.)
Hoist S-band Antenna Manual	C32-01303-*	-	1	

Console Type

Name	Type	Code No.	Qty	Remarks
Display Unit	RCN-303	-	1	w/FAR-3230S-SSD
	RCN-304	-	1	w/FAR-3330S-SSD

Optional Supply

Name	Type	Code No.	Remarks
LAN Signal Converter	OP03-223-1	-	
Cable Extension Kit	OP03-224-1	001-254-390	
De-icer Kit	OP03-227	001-254-330	
Rectifier Unit	RU-3424	-	For 220 VAC
	RU-1746B-2	-	
Transformer Unit	RU-1803	-	Converts 440 VAC to 100 VAC, for processor unit
	RU-3305-0	-	Converts 110/115/220/230 VAC to 100 VAC, for deicer
	RU-5693	-	Converts 110 VAC to 220 VAC, for transceiver unit
	RU-6522	-	Converts 220 VAC to 200 VAC, for transceiver unit
	RU-5466-1	-	Converts 440 VAC to 220 VAC, for transceiver unit
Control Unit	RCU-024	-	ECDIS standard type
	RCU-026	-	Trackball type
LAN Cable Assy.	MOD-Z072-050+	001-167-890-10	
Sensor Adapter	MC-3000S	-	Serial type
	MC-3010A	-	Analog IN
	MC-3020D	-	Digital IN
	MC-3030D	-	Digital OUT
Intelligent HUB	HUB-3000	-	
Switching HUB	HUB-100	-	See manual of HUB-100.
AC/DC Power Supply Unit	PR-240	-	
Installation Materials	CP03-28900(10M)	000-082-658	FR-FTPC-CY 10 m, for sensor adaptor
	CP03-28910(20M)	000-082-659	FR-FTPC-CY 20 m, for sensor adaptor
	CP03-28920(30M)	000-082-660	FR-FTPC-CY 30 m, for sensor adaptor
	CP24-02900(10M)	001-208-050	LAN cable 10 m, for HUB-3000
	CP24-02910(20M)	001-208-060	LAN cable 20 m, for HUB-3000
	CP24-02920(30M)	001-208-040	LAN cable 30 m, for HUB-3000
Connector	CP03-28901	008-542-460	
Bracket Assembly	OP26-5	000-016-270	For MU-190
	OP26-15	001-116-730	For MU-231
Flush Mount Kit	OP26-12	001-116-280	For MU-190
	OP26-17	001-116-750	For MU-231
Hood Assembly	OP26-6	001-080-930	For MU-190
	OP26-16	001-116-740	For MU-231

Name	Type	Code No.	Remarks
Cable Assy	DVI-D/D S-LINK 5M	001-132-960-10	Between processor and control units, 5 m
	DVI-D/D S-LINK 10M	001-133-980-10	Between processor and control units, 10 m
	6TPSH-XH12X2-L5.0SP1	001-186-260-10	For RCU-024/025, 5 m
	6TPSH-XH12X2-L10SP1	001-186-270-10	For RCU-024/025, 10 m
	6TPSH-XH12X2-L20SP1	001-186-280-10	For RCU-024/025, 20 m
	6TPSH-XH12X2-L30SP1	001-186-290-10	For RCU-024/025, 30 m
	6TPSH-XH12X2-L5.0SP2	001-186-310-10	For RCU-026, 5 m
	6TPSH-XH12X2-L10SP2	001-186-320-10	For RCU-026, 10 m
	6TPSH-XH12X2-L20SP2	001-186-330-10	For RCU-026, 20 m
	6TPSH-XH12X2-L30SP2	001-186-340-10	For RCU-026, 30 m
	DSUB9P-X2-L5M	001-188-260	For MU-190/231 brill control, 5 m
	DSUB9P-X2-L10M	001-188-270	For MU-190/231 brill control, 10 m
	OP24-32	001-188-300	USB cable, between processor unit and control unit
	DVI-BNCX5-L2000	001-204-150	For VDR connection
	DSUB9P-X2-L5M-WP	001-207-890	For monitor unit, 5 m, waterproofing type
	DSUB9P-X2-L10M-WP	001-207-900	For monitor unit, 10 m, waterproofing type
	DSUB9P-X2-A-L5M	001-252-580	For Hatteland display
	DSUB9P-X2-A-L10M	001-252-590	For Hatteland display
Monitor Unit	MU-190	-	For FAR-3230S-SSD(-BB)
	MU-231	-	For FAR-3330S-SSD
Terminal Opener	OP24-33	001-188-850	
Cable	MC1.5-W-L600	001-187-470-10	For sensor adapters, 6 m
	MC1.5-W-L1000	001-187-480-10	For sensor adapters, 10 m
	MC1.5-W-L2000	001-187-490-10	For sensor adapters, 20 m
	MC1.5-W-L3000	001-187-500-10	For sensor adapters, 30 m
Crimping Tool	CRIMPFOX10S	001-206-920	For ferrule for sensor adaptor
Spare Parts	SP24-00801 (BOX)	001-235-320	For HUB-3000
Program Installation Software	OP03-230	001-285-780	DVD-R
Operator's Manual	OME-36160-*	-	
	OMJ-36160-*	-	
Magnetron Replace Instruction Manual	E32-01306-*	-	
	J32-01306-*	-	

About the category sticker

This radar meets the requirements in IEC62388 (Marine navigation and radio communication equipment and systems-Ship born radar-Performance requirements, method of testing and required test results.) Check the appropriate box on the sticker which is pre-attached on the processor unit, according to your radar's specification. Refer to the table shown below to confirm your category.

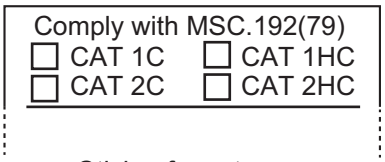

Sticker for category

Category	Radar type	ANT, rotation speed
CAT 1C	FAR-3330S-SSD	24 rpm
CAT 1HC	Same model as above	42 rpm
CAT 2C	FAR-3230S-SSD, FAR-3230S-SSD-BB	24 rpm
CAT 2HC	Same models as above	42 rpm

This page is intentionally left blank.

1. INSTALLATION

NOTICE

Do not apply paint, anti-corrosive sealant or contact spray to coating or plastic parts of the equipment.

Those items contain organic solvents that can damage coating and plastic parts, especially plastic connectors.

1.1 Antenna Unit

1.1.1 Installation considerations

- The antenna unit is generally installed either on top of the wheelhouse or on the radar mast, on a suitable platform. Locate the antenna unit in an elevated position to permit maximum target visibility.
- A line of sight from the antenna unit to the bow of the ship must hit the surface of the sea in not more than 500 m or twice the ship's length, depending whichever value is smaller, for all load and trim conditions.

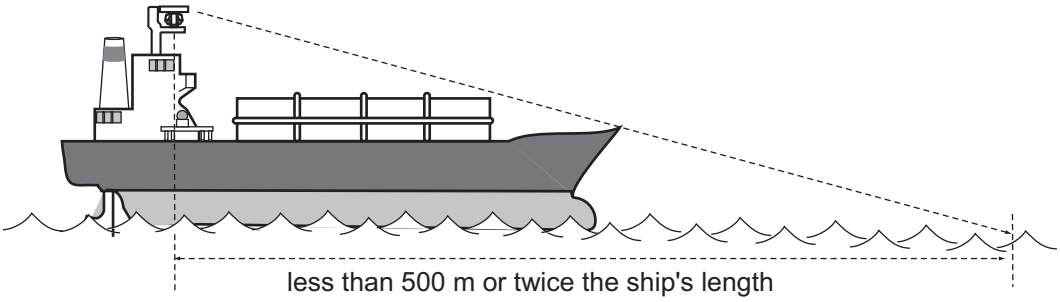

- Install the antenna unit so that any blind sectors caused by objects (mast, etc.) are kept to a minimum. A blind sector must not exist in arc of the horizon from right ahead to 22.5° aft of the beam to either side (see the figure below). Also, individual blind sectors of more than 5°, or the total arc of both blind sectors of more than 20°, must not occur in the remaining arc (Figure 2). Note that any two blind sectors separated by 3° or less are regarded as one sector.

Figure 1

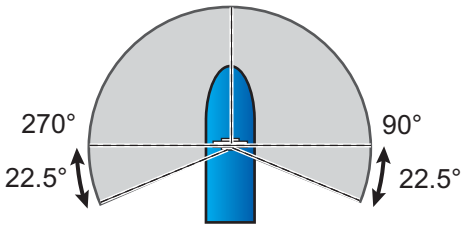

Figure 2

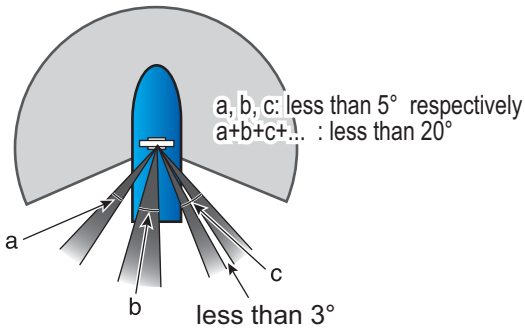

- Do not install the antenna where extreme winds may strike the port and starboard sides of the antenna.
- Install the antenna unit away from interfering high-power energy sources and TX radio antennas.
- Keep the lower edge of the antenna unit above the safety rail by at least 500 mm.
- Install two antenna units as shown in the right figure.

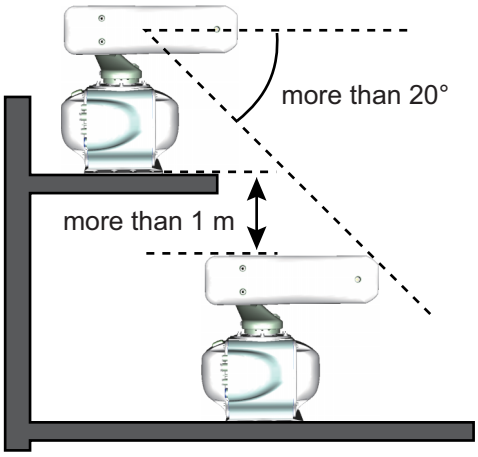

- No funnel, mast or derrick shall be within the vertical beamwidth of the antenna unit in the bow direction, especially zero degree ±5°, to prevent blind sectors and false echoes on the radar picture.
- It is rarely possible to place the antenna unit where completely clear view in all directions is available. Therefore, you should determine the angular width and relative bearing of any shadow sectors for their influence on the radar at the first opportunity after fitting.
- Locate the antenna of EPFS clear of the radar antenna to prevent interference to the EPFS. A separation of more than two meters is recommended.
- A magnetic compass will be affected if the antenna unit is placed too close to the magnetic compass. Observe the compass safe distances on page ii to prevent interference to a magnetic compass.
- Do not paint the radiator aperture, to ensure proper emission of the radar waves.
- Ground the unit with the ground wire (supplied).
- Deposits and fumes from a funnel or other exhaust vent can affect the aerial performance and hot gases may distort the radiator portion. Do not install the antenna unit where the temperature is more than 55°C.
- Leave sufficient space around the unit for maintenance and servicing. See the antenna unit outline drawing for recommended maintenance space.

Note: For more information, please refer to IMO SN/Circ.271 “Guidelines for the installation of shipborne radar equipment”.

1.1.2 Installation precaution for S-band antenna unit

If an S-band antenna unit is mounted near the end of a platform to provide sufficient rotation clearance for the radiator, the antenna unit, because of its weight, swings up and down by ship's vibration and rolling. This exerts excessive levels of stress at the base of the radiator, which can damage the radiator. To prevent this, relocate the antenna unit, or if relocation is not possible, reinforce the platform.

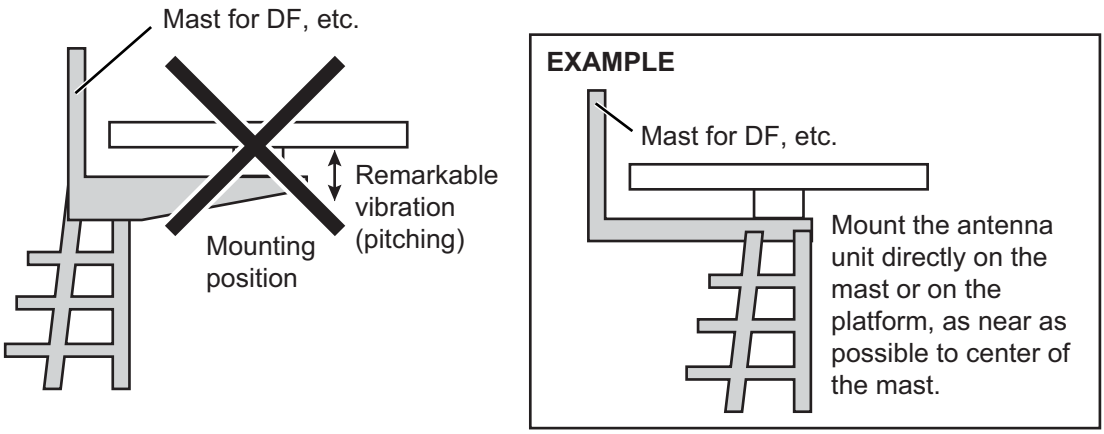

1.1.3 How to assemble the antenna unit

The antenna unit consists of the antenna radiator (w/antenna support) and the antenna unit chassis, and they are packed separately. Fasten the antenna radiator to the antenna unit chassis as follows:

1. Remove the protective waveguide cap from the waveguide on the radiator bracket.

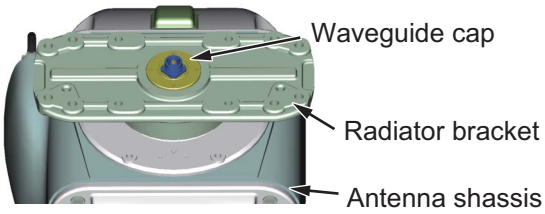

2. Put the radiator on the radiator bracket so the guide pins of the antenna support fits into the guide pin holes on the radiator bracket. (Orient the logo of the radiator to the side with bow mark on the bracket. If reversely oriented the radiator cannot be set to the bracket.)

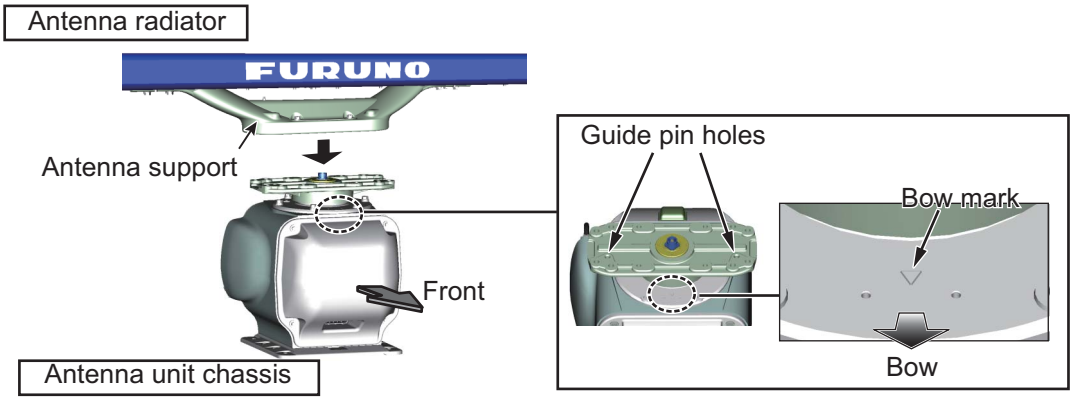

3. Coat the threads of eight hex bolts (M12×50, supplied) with marine sealant supplied.

4. Set the antenna radiator to the radiator bracket from the bottom of the bracket with the eight hex bolts, spring washers and flat washers. The torque must be 49 N•m.

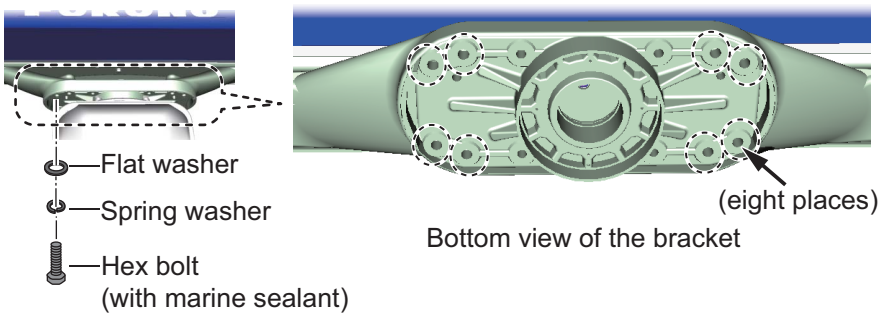

5. Coat the screws fixed at step 4 with marine sealant (supplied) as shown in the right figure.

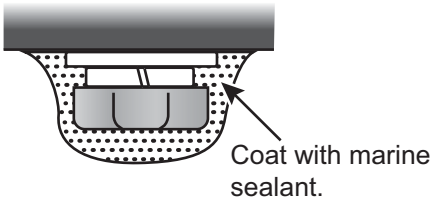

6. Connect the coaxial cable from the antenna unit to the rotary joint. The torque must be 25 N•m.

   Note 1: The connector of the coaxial cable must be connected vertically.

   Note 2: The coaxial cable must be horizontal and must not contact the hole of the antenna support.

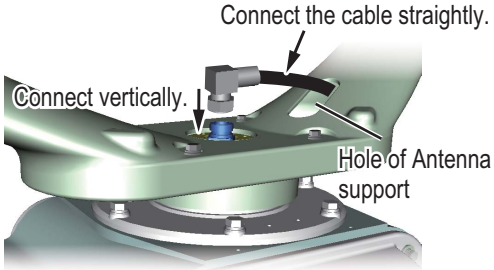

   Note 3: If the coaxial cable is long, bend the cable some distance from the connector. Insert surplus cable into antenna support. Connect the cable to the rotary joint straightly.

7. Coat the hex bolts (M12×40, 4 pcs.) for the support cover with marine sealant (supplied).

8. Fasten the support cover with the bolts, spring washers and flat washers. The torque must be 20 N•m.

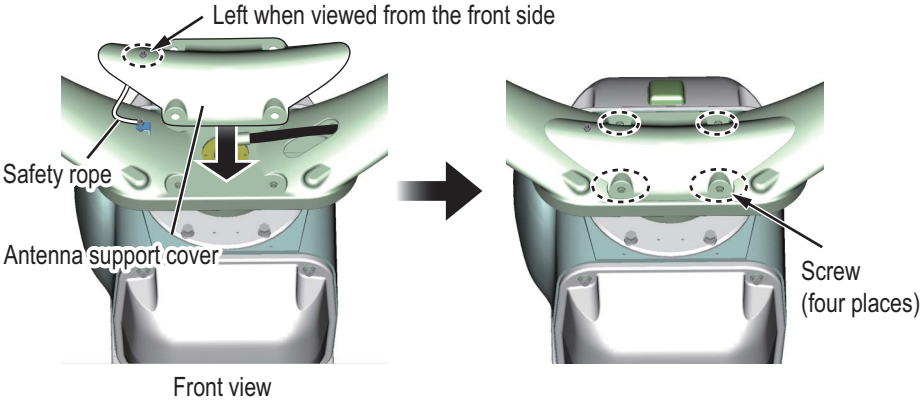

   Note 1: Make sure the safety rope does not contact the antenna support cover.

   Note 2: Set the screw for the safety rope to come to the left when viewed from the front side of the antenna.

1.1.4 How to hoist the antenna unit

The antenna unit may be assembled before hoisting it to the mounting platform. Attach lifting belt slings to the chassis, NOT the antenna radiator, as shown in the figure below.

There are two methods to hoist the antenna unit.

Method 1

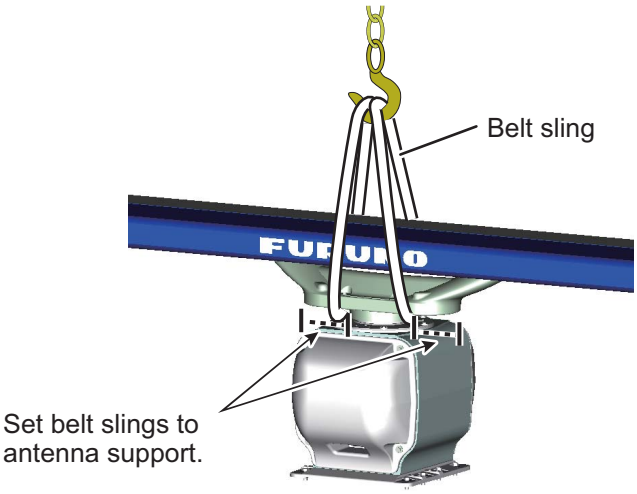

Method 2

Fasten belt sling to a shackle, pass belt sling around antenna support and fasten other end of belt sling to other shackle.

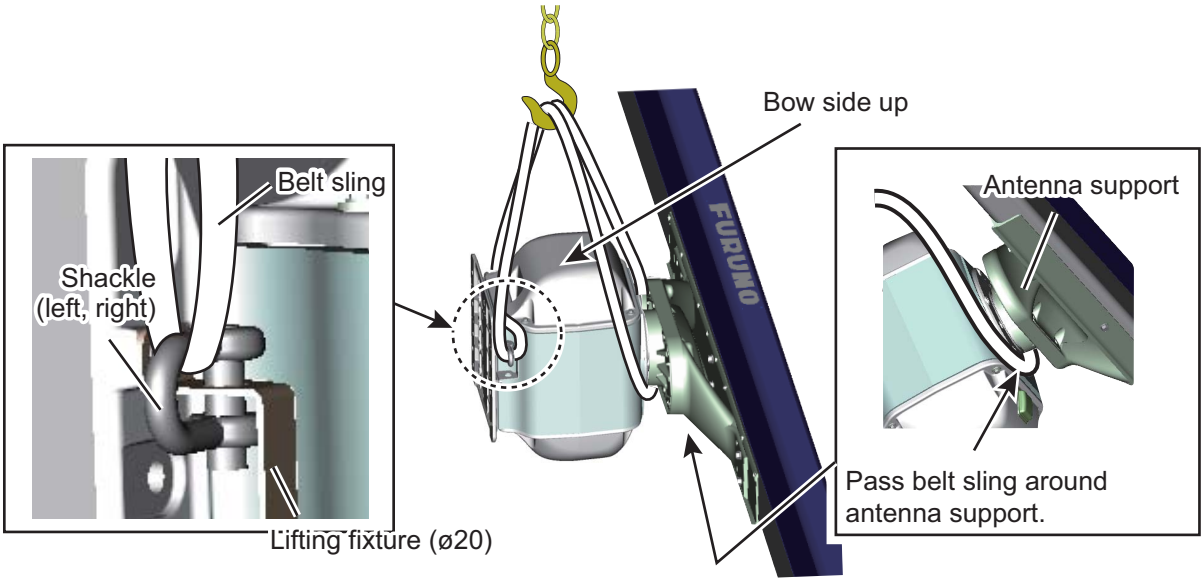

1.1.5 How to fasten the antenna unit to the mounting platform

1. Construct a suitable mounting platform referring to the outline drawing at the end of this manual.
   - The diameter of the mast for fixing the antenna unit platform must be over 250 mm.
   - The thickness of the antenna unit platform must be over 15 mm.
   - The reinforcement rib must be installed diagonally as shown below.
2. Referring to the outline drawing, drill eight mounting holes in the mounting platform.

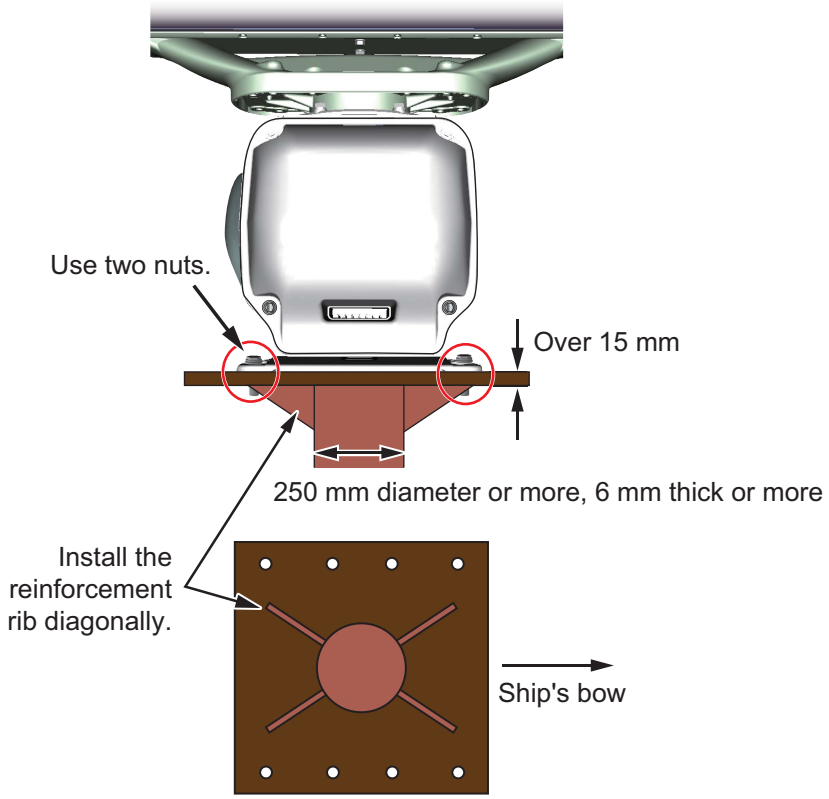

Bottom view

3. Put the antenna unit on the mounting platform, then orient the unit so the bow mark on its base is facing the ship's bow.
4. Fasten the antenna unit to the mounting platform with M12×70 hex bolts, nuts, flat washers, spring washers and seal washers (supplied). The torque must be 49 N•m.

   Note: The bolts can also be inserted from the underside of the platform.

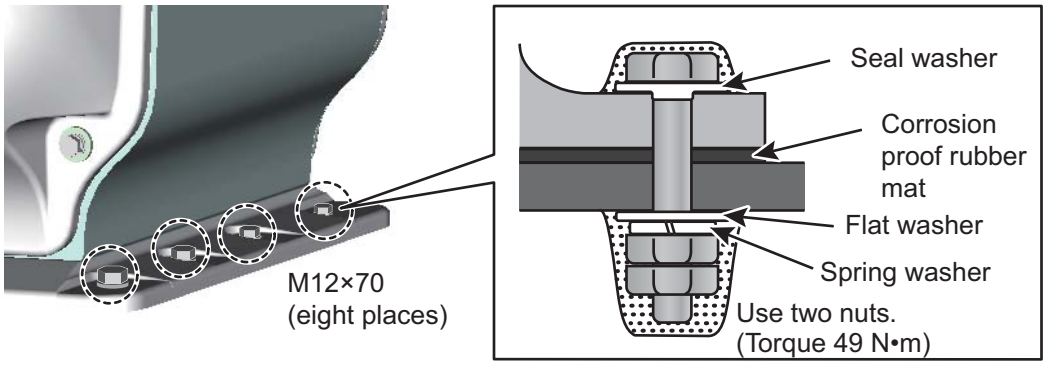

5. Using a hex bolt (M6×x25), nut (M6), spring washer (M6) and flat washer (M6), establish the ground system on the mounting platform as shown below. The location must be within 340 mm of the ground terminal on the antenna unit. Connect the ground wire (RW-4747, 340 mm, supplied) between the grounding point and ground terminal on the antenna unit. Coat the hardware of the ground system with the marine sealant (supplied).

Antenna chassis side

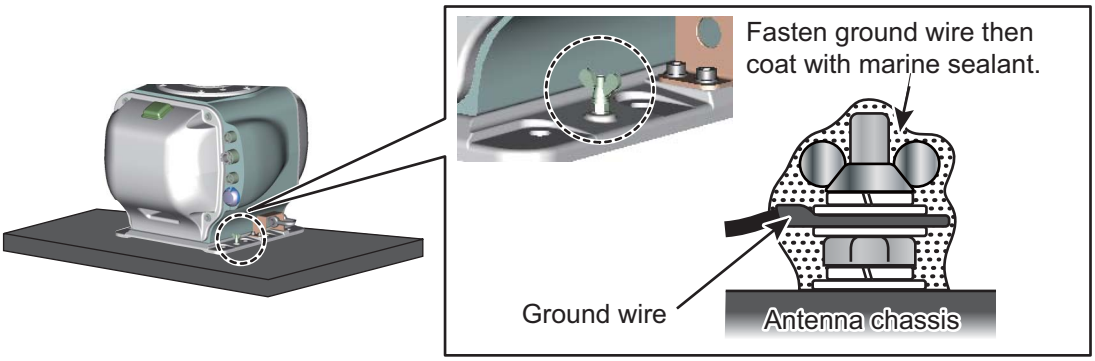

Mounting platform side

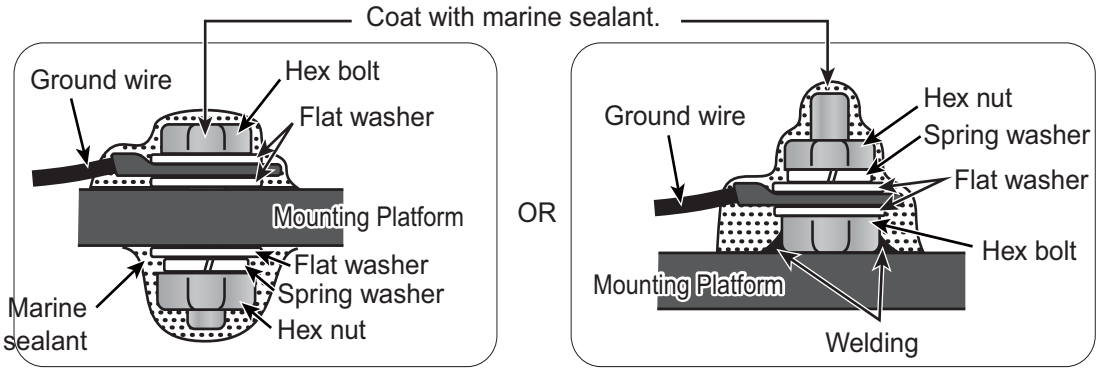

Arrange ground terminal as close as possible to antenna unit.

1.2 Monitor Unit

See the operator's manual for MU-190 (OMC-44670) or MU-231 (OMC-44690). Keep in mind the following points when selecting a location.

Installation considerations

- Locate the monitor unit not to block the view from the bridge window because of the frame of the window.
- Locate the monitor unit under the condition which the ambient illumination is easy to observe.

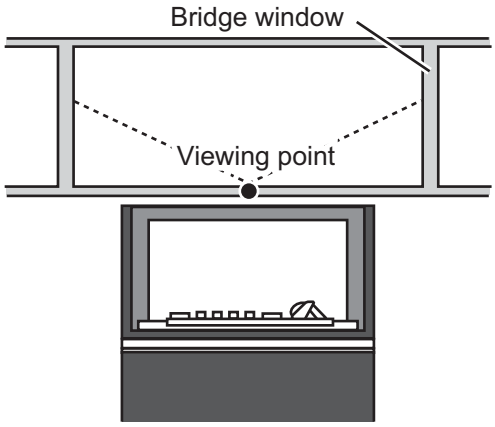

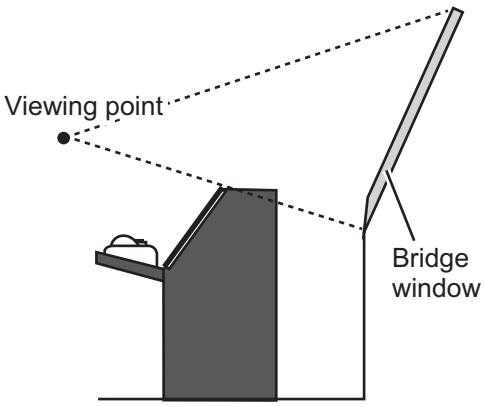

1.3 Radar Control Unit, Trackball Control Unit

The control units can be installed on a desktop or flush mounted in a console. For the desktop installation the unit can laid flat or tilted.

Note: The control unit RCU-025 can be used instead of the RCU-020 (for FAR-2xx7) mounted in the connection stand (OP03-184 or OP26-20) using the optional kit OP24-31.

Installation considerations

Keep in mind the following points when selecting a location.

- Select a location where the control unit can be operated easily.
- Locate the unit away from heat sources because of heat that can build up inside the cabinet.
- Locate the equipment away from places subject to water splash and rain.
- Leave sufficient space at the sides and rear of the unit to facilitate maintenance.
- Determine the mounting location considering the length of the signal cable between the control unit and the processor unit.
- A magnetic compass will be affected if the control unit is placed too close to the magnetic compass. Observe the compass safe distances in the SAFETY INSTRUCTIONS prevent interference to the compass.
- Be sure to connect the ground wire (between the earth terminal on the chassis and the ship's earth).

- Fasten the USB cable with the cable tie.

Ex. Radar control unit, bottom view RCU-025

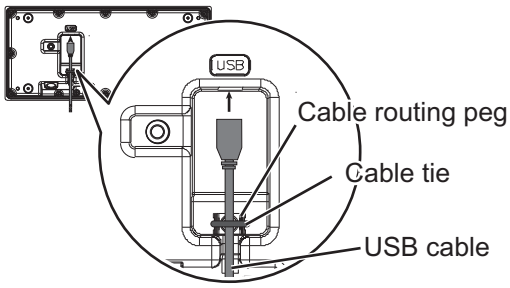

1.3.1 Desktop installation

How to mount the unit tilted

Use the desk fixing plate to mount the unit tilted.

1. Fix the desk fixing plate to the bottom of the control unit.
2. Fix the control unit with self-tapping screws (ϕ5×20, local supply).

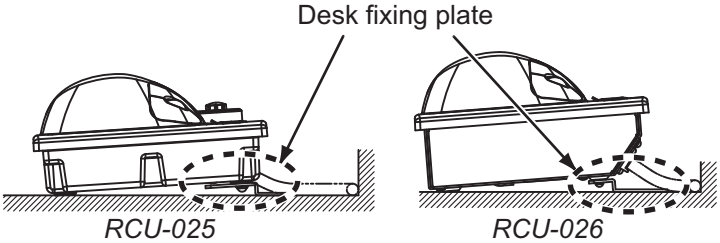

How to mount the unit flush with mounting surface

Do this installation to install the control unit flat on the mounting surface.

1. Drill four mounting holes of 5 mm (4 mm, for RCU-026) diameter referring to the outline drawing at the back of this manual.
2. Fix the control unit with four screws, M4, local supply (M3, for RCU-026), from the underside of the desktop.

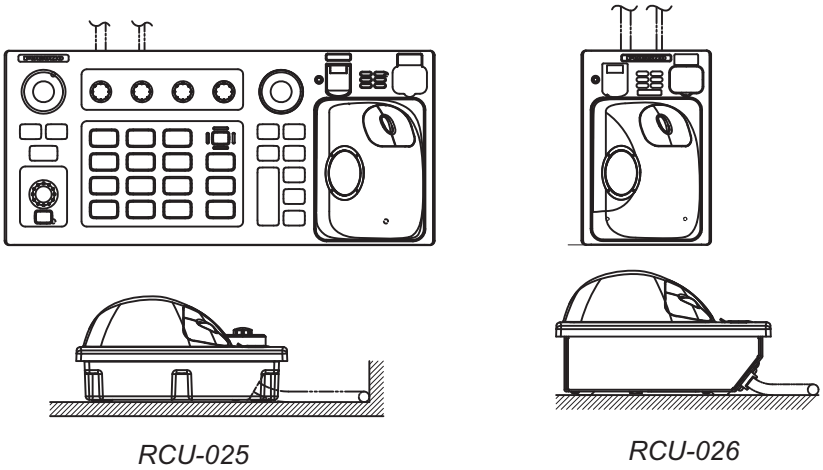

1.3.2 Installation in a console

Use the optional flush mount kit (OP24-24 for RCU-024/025, OP24-27 for RCU-026) to install the control unit in a console.

Note: For flush mounting in a panel, the mounting surface must be flat. Do not install the unit on an uneven surface.

1. Prepare a cutout in the location as shown in the figure as below.

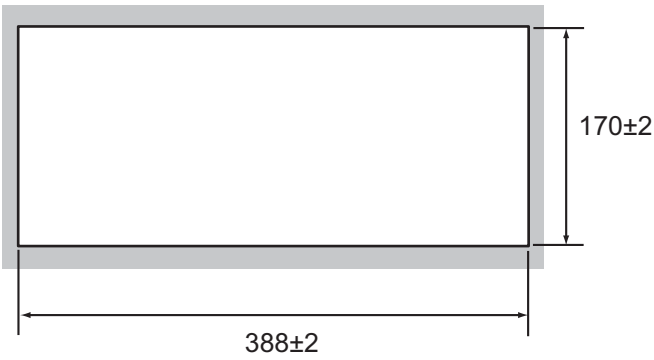

For RCU-024/025

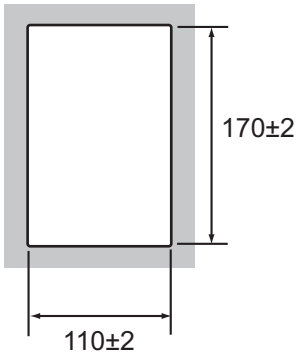

For RCU-026

2. Set the control unit to the cutout.
3. Attach the mounting plate to the control unit with four screws from the rear side.
4. Insert the wing nut (or hex. nut) to each wing screw then fix the wing screw to each mounting plate.
5. Fasten each wing screw and then fasten the wing nuts (or hex. nuts) as shown in figure below.

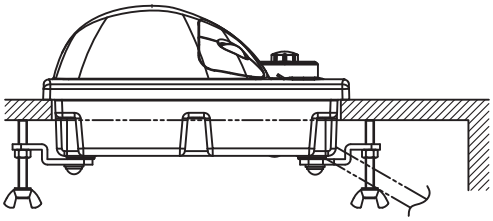

RCU-024/025

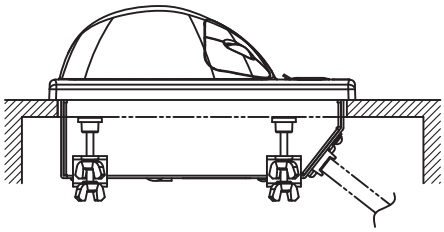

RCU-026

1.4 Power Supply Unit (PSU-016/PSU-018)

1.4.1 Installation considerations

The Power Supply Unit can be mounted on a bulkhead or deck. Keep in mind the following points when selecting a location.

- Locate the unit away from heat sources because of heat that can build up inside the cabinet.
- Select a location where the vibration is minimal.
- Locate the equipment away from places subject to water splash and rain.
- Make the service clearance of 100 mm in front of the vent hole (front and rear sides).

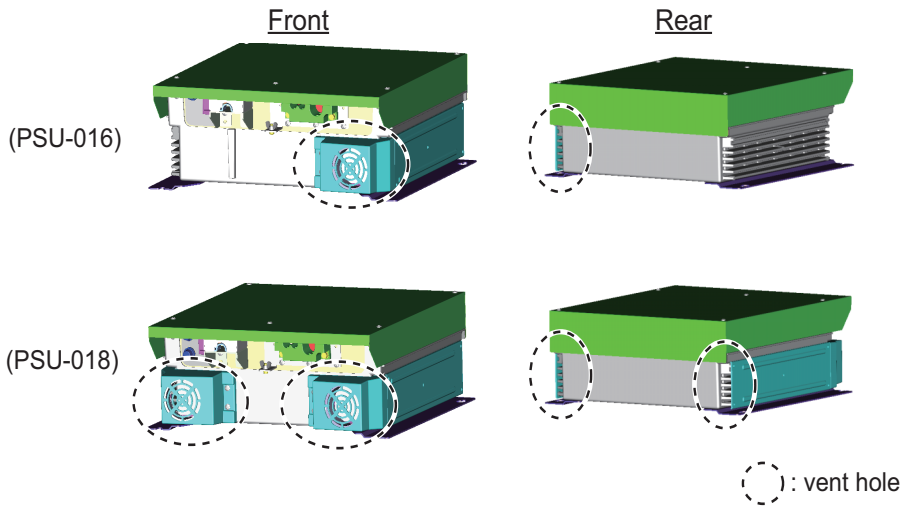

- Leave sufficient space at the sides and rear of the unit to facilitate maintenance.
- Connect the ground wire between the earth terminal on the chassis and the ship's earth.
- A magnetic compass will be affected if the unit is placed too close to the magnetic compass. Observe the compass safe distances on page ii to prevent disturbance to the compass.

1.4.2 How to mount the power supply unit

Use four bolts (M6, local supply) to fix the power supply unit.

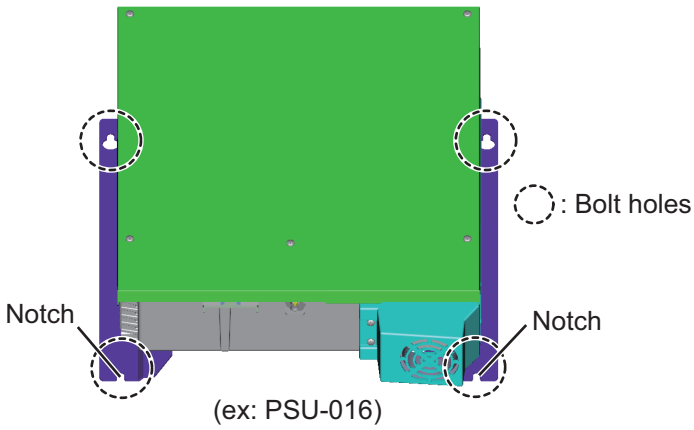

Note: For bulkhead mounting, the notches on the unit must face the deck.

1.5 Processor Unit

1.5.1 Installation considerations

Keep in mind the following points when selecting a location.

- Locate the processor unit away from heat sources because of heat that can build up inside the cabinet.
- Select a location where the vibration is minimal.
- Locate the equipment away from places subject to water splash and rain.
- Make the service clearance of 100 mm in front of the vent hole (left side).
- Leave sufficient space at the sides and rear of the unit to facilitate maintenance.
- Be sure to connect the ground wire (between the earth terminal on the chassis and the ship's earth).
- A magnetic compass will be affected if the processor unit is placed too close to the magnetic compass. Observe the compass safe distances in the "SAFETY INSTRUCTIONS" to prevent interference to a magnetic compass.
- Leave the dummy plate fastened, to prevent the wrong operation of the power switch. The items behind the plate are for use by the serviceman.

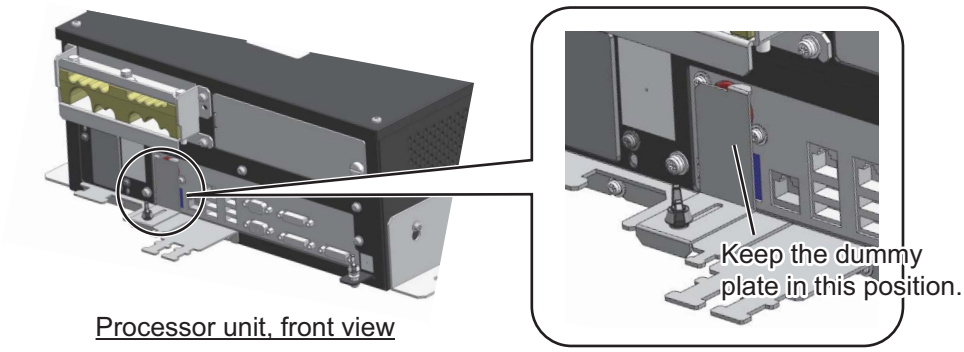

Processor unit, front view

- Install the processor unit on the floor, or on a bulkhead with the following direction (horizontal), because of the DVD drive unit.

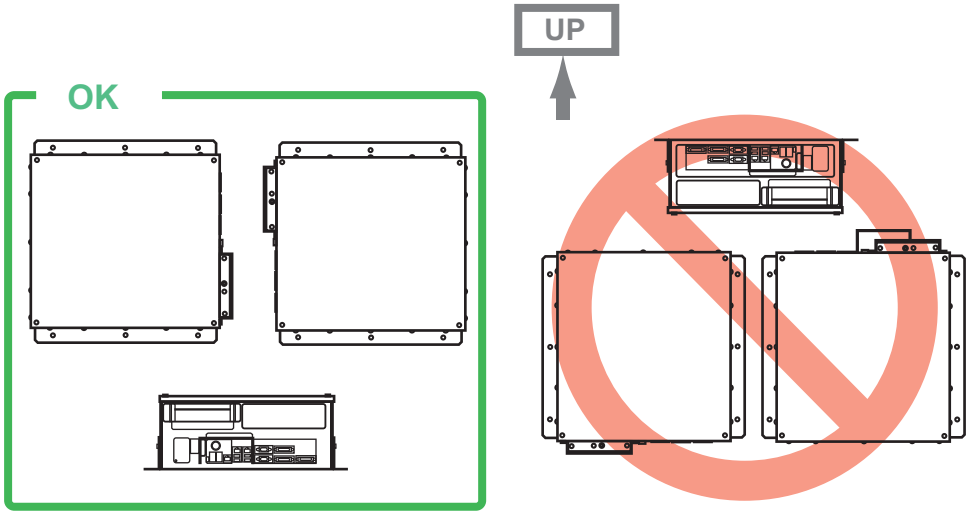

1.5.2 How to install the processor unit

Use four bolts (M6, local supply) to fix the processor unit.

1. Use 10 binding head screws (M4×8, supplied) to attach the chassis bases 1 and 2 to the processor unit.
   Note: For bulkhead mounting, attach the chassis base 2 so that the notches on it are facing the deck.

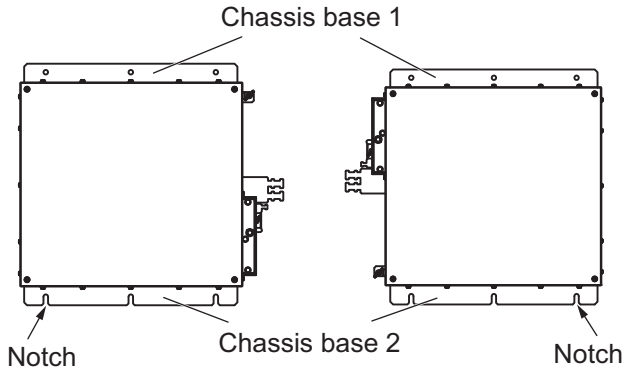

2. Use six bolts (M6, local supply) to fix the processor unit.

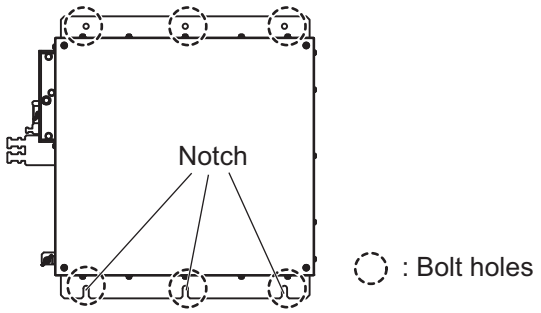

1.6 Sensor Adapter MC-3000S/3010A/3020D/3030D (option)

Installation considerations

When you select a mounting location, keep in mind the following points:

- Locate the adapter away from heat sources because of heat that can build up inside the cabinet.
- The vibration must be minimal.
- Locate the equipment away from places subject to water splash and rain.
- Be sure to connect the ground wire (between the earth terminal on chassis and the ship's earth).
- Leave sufficient space at the sides and rear of the unit to facilitate maintenance.
- A magnetic compass will be affected if the adapter is placed too close to the magnetic compass. Observe the compass safe distances in the "SAFETY INSTRUCTIONS" (on page i) to prevent interference to a magnetic compass.
- For MC-3000S, use a Cat5 cable of correspondence.

- Select the mounting location considering the number of the sensor adapters connected.
  A maximum of eight MC-3000S can be connected to a sensor network (for the redundant connection:16).
  A maximum of 10 sensor adapters (MC-3010A/3020D/3030D) can be connected to a MC-3000S. However, note that five MC-3010A can be connected.
- Select the location so that the length of the cables among the sensor adapters (MC-3000S, 3010A, 3020D and 3030D) is less than 6 m. If the length is more than 6 m, the adapters may not work properly.

How to install the sensor adapter

1. Unfasten four binding screws to remove the cover from the sensor adapter.
2. Fasten four self-tapping screws (ϕ4×20, supplied) to fix the sensor adapter.
3. Reattach the cover.

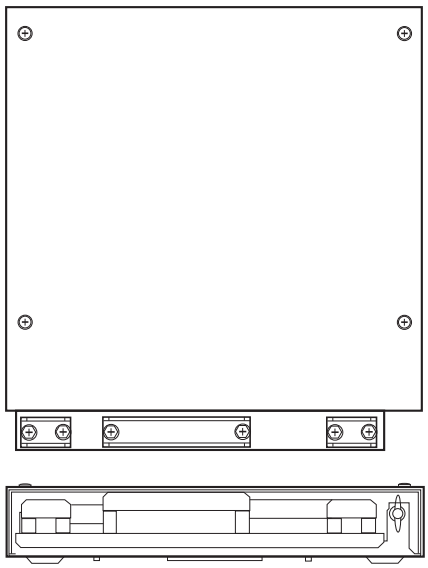

MC-3000S

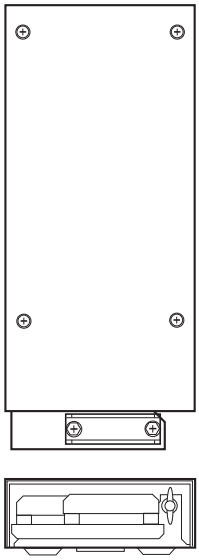

MC-3010A/3020D/3030D

1.7 Intelligent Hub HUB-3000 (option)

Use the optional Intelligent Hub HUB-3000 to connect gateway network equipment. Do not connect this network to the shipborne LAN network. Further, do not connect a PC to this network, other than for maintenance.

Installation considerations

Keep in mind the following considerations when selecting a location.

- Locate the hub away from heat sources because of heat that can build up inside the cabinet.
- The vibration must be minimal.
- Locate the equipment away from places subject to water splash and rain.
- Be sure to connect a ground (between the earth terminal on chassis and the ship's earth).
- Leave sufficient space at the sides and rear of the unit to facilitate maintenance.

- A magnetic compass will be affected if the adapter is placed too close to the magnetic compass. Observe the compass safe distances in the "SAFETY INSTRUCTIONS" (on page i) to prevent interference to a magnetic compass.

How to install the HUB-3000

1. Use two binding screws (M3×6, supplied) to attach the cable clamp (supplied) to the bottom of the HUB-3000.

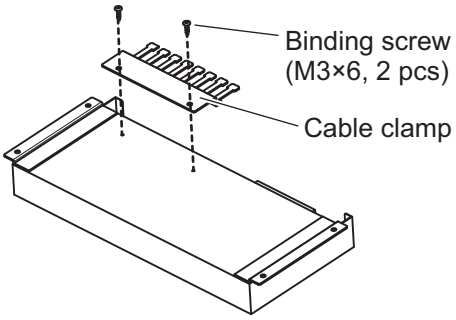

HUB-3000, bottom view

2. Fasten four self-tapping screws (ϕ4×20, supplied) to fix the unit.

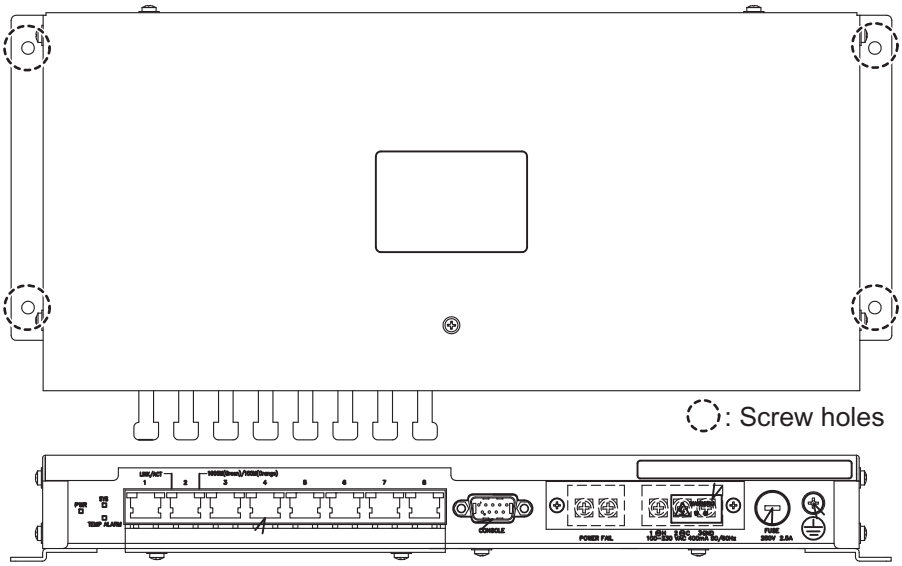

1.8 Switching Hub HUB-100 (option)

Use the optional Switching Hub HUB-100 to connect sensor networks. This network cannot be connected to the shipborne LAN network. Further do not connect a commercial PC to this network, other than for the maintenance.

For the installation procedures, see the operator's manual for HUB-100 (Pub. No. OMC-35191).

Installation considerations

Keep in mind the following points when selecting a location.

- Locate the hub away from heat sources because of heat that can build up inside the cabinet.
- The vibration must be minimal.
- Locate the equipment away from places subject to water splash and rain.
- Make sure that the ground wire is connected between the earth terminal on chassis and the ship's earth.
- Leave sufficient space at the sides and rear of the unit to facilitate maintenance.
- A magnetic compass will be affected if the adapter is placed too close to the magnetic compass. Observe the compass safe distances in the SAFETY INSTRUCTIONS to prevent compass malfunction.

2. WIRING

2.1 Overview

Cabling considerations

To lessen the chance of picking up electrical interference, avoid where possible routing the antenna cable (power and LAN) near other onboard electrical equipment (radars, TX radio antennas, etc.). Also avoid running the cable in parallel with power cables. When crossing with other cable, the angle must be 90° to minimize the magnetic field coupling.

The antenna cable between the antenna, PSU and processor units is available in lengths of 15 m, 30 m, 40 m, and 50 m. Whatever length is used, it must be unbroken; namely, no splicing allowed. Use the antenna cable as short as possible to minimize attenuation of the signal.

The radar must be connected to an emergency power source, as required by SOLAS II-1.

About network construction

- Use the optional Switching Hub HUB-100 to connect the sensor networks. For the gateway networks, use the optional Intelligent Hub HUB-3000.
- Do not connect the ship's LAN network to the optional HUBs. Also, commercial PCs cannot be connected to the gateway network, other than for maintenance.
- To connect the FEA-2xx7, FCR-2xx9, FMD-32x0 or FAR-2xx7 series via LAN network, use the INS net-work.

About wiring

- Use the optional USB cable (type: OP24-32) to connect to the USB port on the control unit.
- The length of the USB cable should be within 5 m to prevent equipment trouble.
- The length of LAN cables must be within 50 m.
- Use the Cat5e or Cat6 LAN cable for the network if available locally.
- If LAN cables are not available locally, use the optional LAN cables (FR-FTPC-CY for sensor network, DTI-C5E350 VCV for gateway network).
- If extension or division of the DVI or RGB cables is necessary, use the dividers shown below.
  - DVI cable divider: DVI-12A (maker: IMAGENICS)
  - RGB divider: CIF-12H, DD-106 or WBD-14F (maker: IMAGENICS)
- Make sure that the ground wires are connected between the ground terminals on each equipment and the ship's earth.
- If a UPS (user supply) is connected to this equipment, be sure that the grounding lamp does not light.
- The output from the UPS must be a sine wave, as in the right figure.

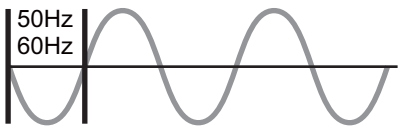

Standard wiring

A Cat 5e LAN cable (RW-00135) connects between the antenna unit and the power supply unit (PSU). The maximum length of the cables between the Processor Unit and the antenna unit is 80 m.

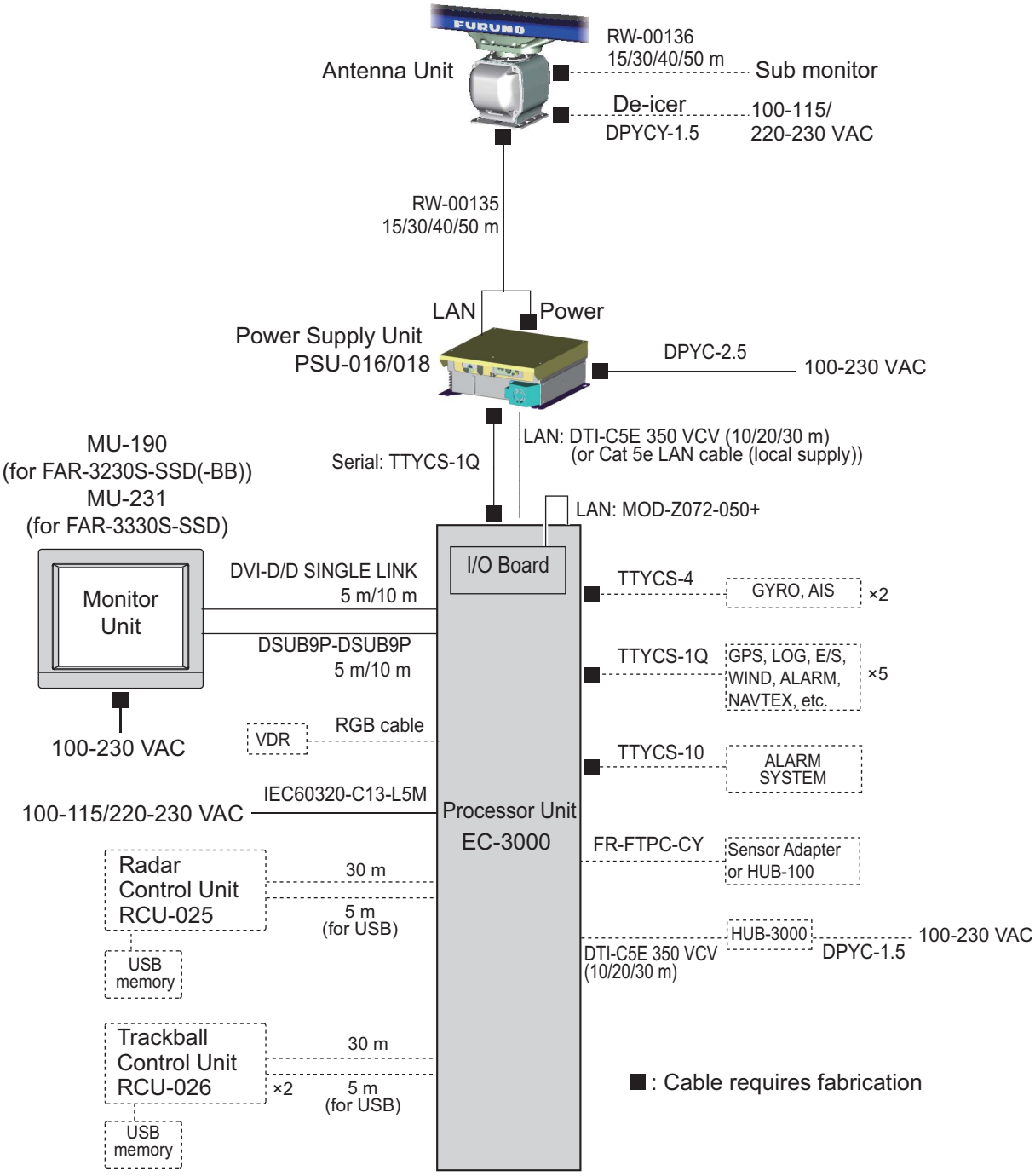

2.2 Antenna Unit

Three cables are connected to the antenna unit: antenna cable, cable for the sub monitor (option) and power cable for the deicer (option). The procedure shows how to connect all cables. Disregard the descriptions for the optional equipment if not applicable.

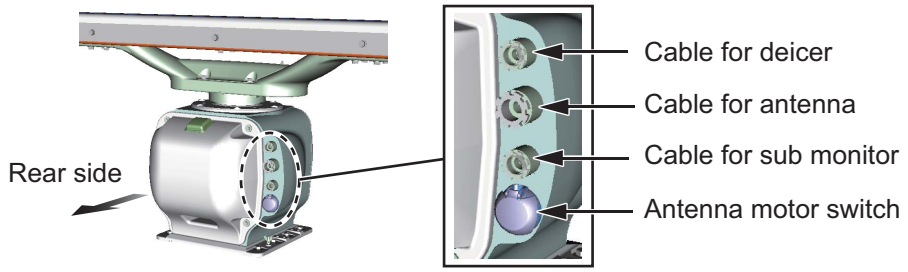

2.2.1 How to fabricate the cables

Antenna cable RW-00135

See "How to fabricate the LAN cable" on page 2-12 for how to attach the LAN cable connector.

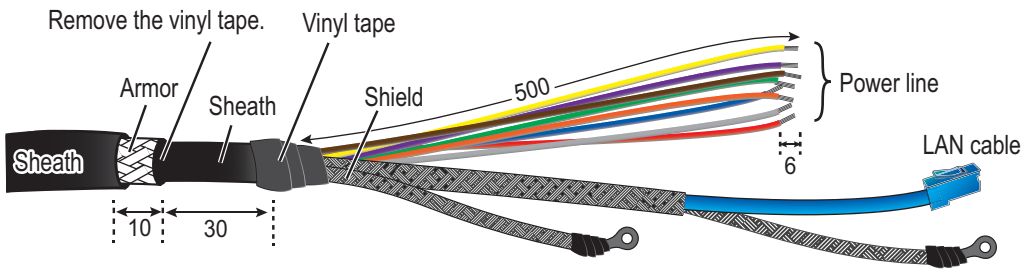

Antenna cable RW-9600/6895/4873 (for retrofit installation)

The optional LAN signal converter kit is required for retrofit installation. For wiring in case of a retrofit, see section 2.7.

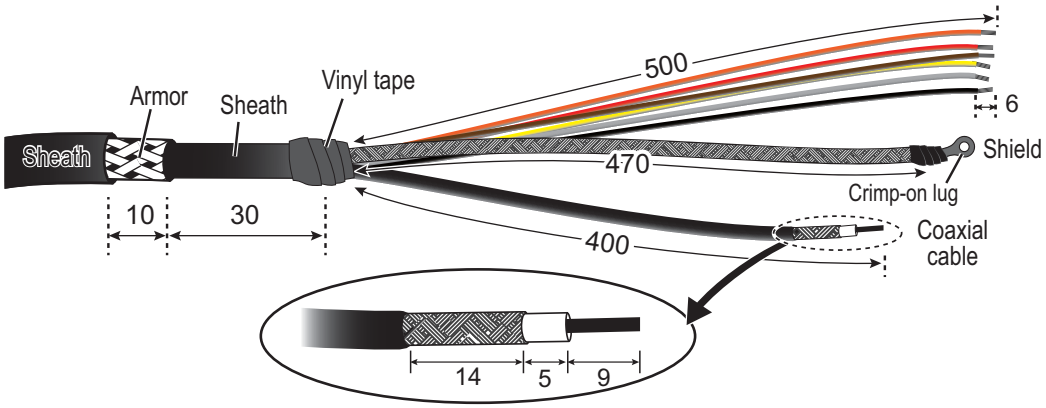

For RW-9600: The white, red, and green wires are not used. Attach a single crimp-on lug (FV5.5-S4(LF), yellow) locally to the wires. (These wires will be connected together with the shield of the power line, in the next section.)

For RW-6895/4873: Fifteen wires are not used. Cut the wires and bind them with vinyl tape. Do not connect the wires to ground.

Cable RW-00136 (for a sub monitor)

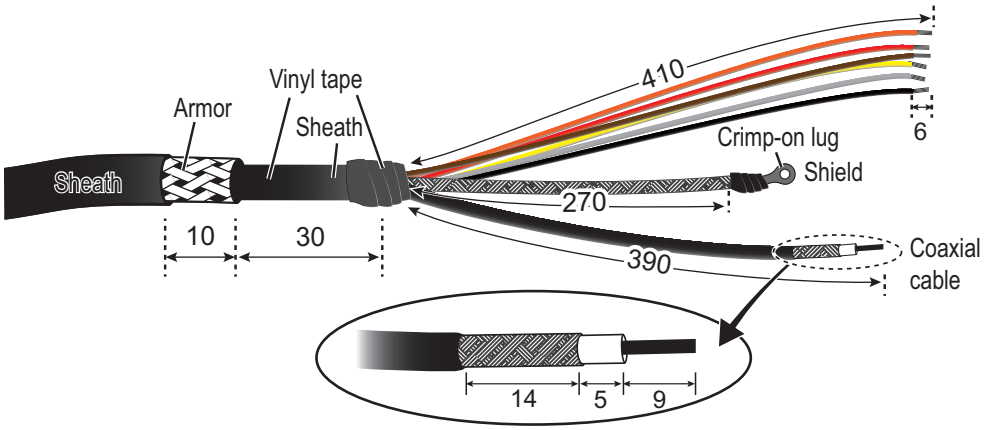

Cable DPYCY-1.5 (for the optional deicer)

Wrap the supplied spiral tube around the power cable for de-icer, starting from the pc board.

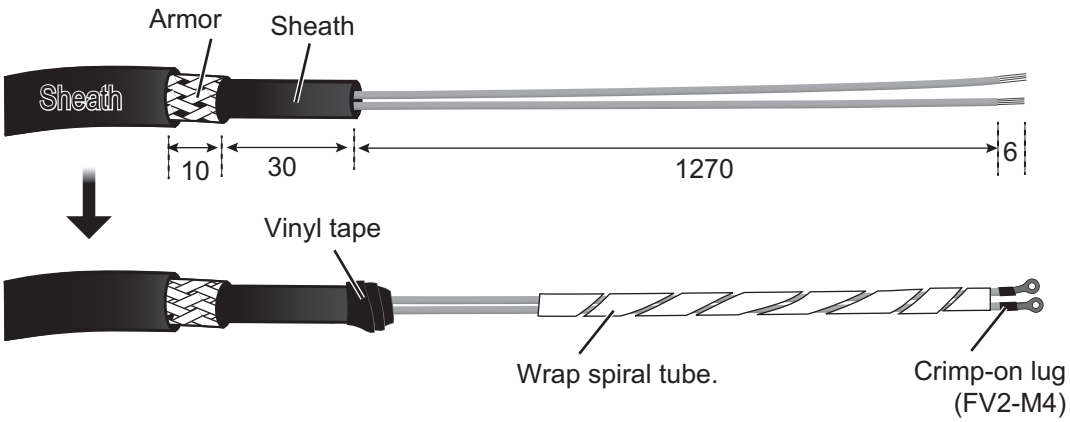

2.2.2 How to connect the cables

Note: If there is a chance of inclement weather when the RF unit is removed, cover the intakes on the front and rear covers with packing tape. Be sure to remove the tape after completing the installation.

1. Loosen four bolts on the rear cover, then remove the rear cover,
   Note: The cable for the performance monitor is connected between the rear cover and the RF-TB Board. Detach the cover slowly to prevent damage to the cable and connector.

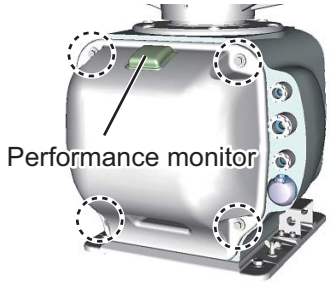

2. Disconnect the performance monitor connector (J807) and the motor drive connectors (J803, J804 and J840) from the RF-TB Board.

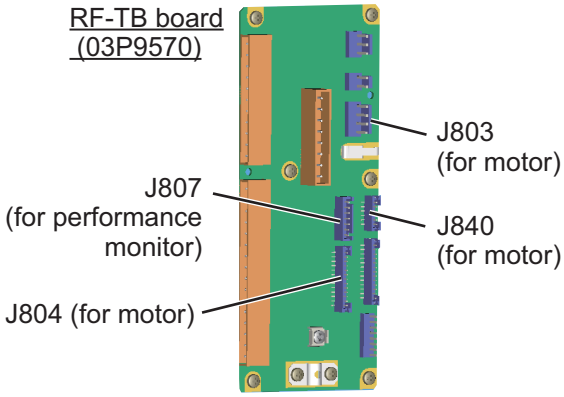

3. Disconnect the coaxial cable.

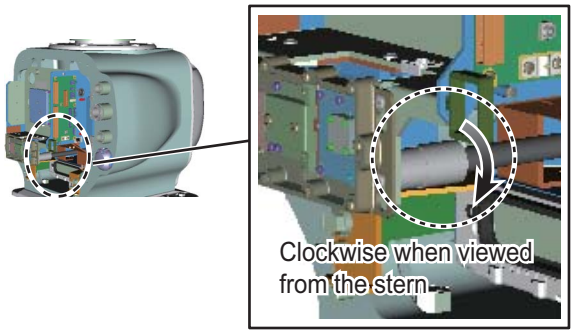

4. Unfasten four bolts circled in the right figure to enable removal of the RF unit.

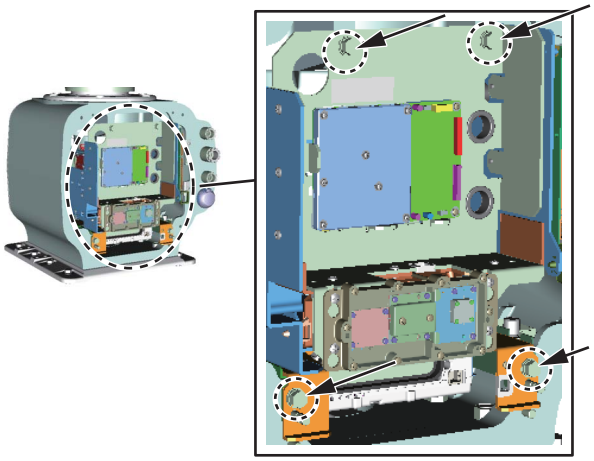

5. Remove the RF unit.

6. Unfasten the cable gland for the antenna cable (RW-00135) and remove the gasket and three flat washers.

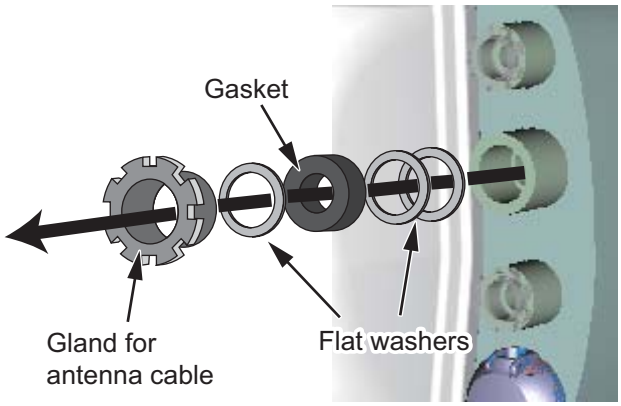

7. Slide the cable gland, the gasket and three flat washers onto the cable as shown in the right figure.

8. Push the flat washer against the armor.

9. Trim the armor so that it does not extend past the flat washers, then pass the antenna cable through the cable entrance.

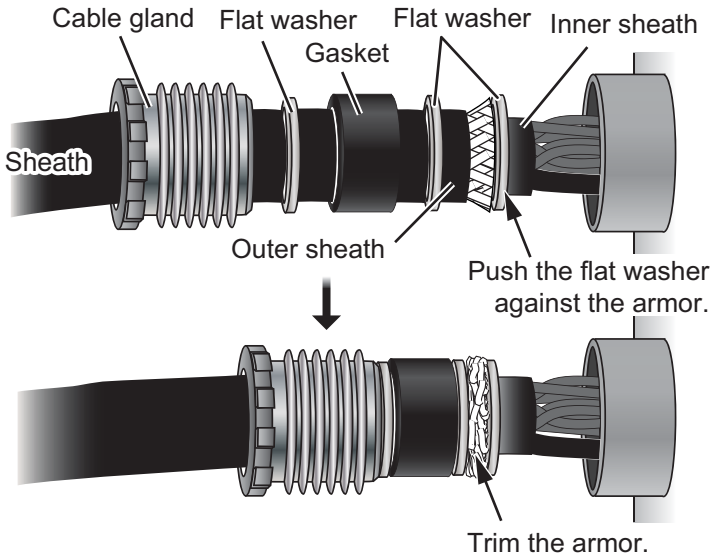

10. If applicable, also pass the cable for the sub monitor and the power cable for the deicer through the cable entrance. Pass the cables through their respective locking wire saddle.

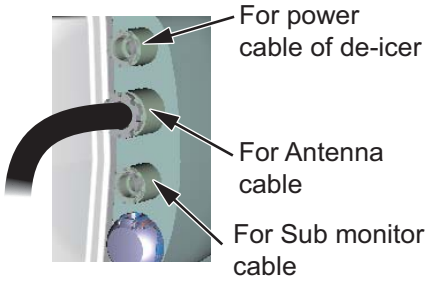

11. Tighten the cable glands with the hook spanner wrench.
    Note: Use the wrench of the correct size. If you do not have the hook spanner wrench, contact our dealer.
12. Pull the cables out of the chassis other than the cable for de-icer. See step 13 for the deicer.
13. **DE-ICER INSTALLATION.** If the de-icer is not provided, go to step 14 on page 2-8. See "S-band DE-ICER Kit Installation Instructions", issued separately, for the de-icer not fitted at the factory.
    1) Remove four bolts then spread open the right and left heater elements on the front cover.
       Note: Lift the elements slightly when opening so as not hit the elements on the bolts on the chassis.

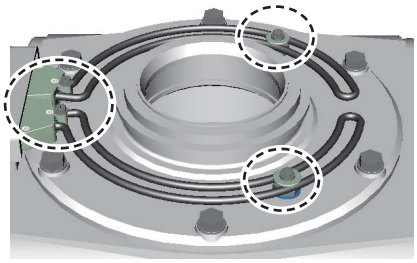

2) Unfasten four bolts to open the front cover. Remove the cover, being careful not to hit the elements on the chassis or radiator.

3) Remove then pass the power cable from the cable entrance. Tighten the cable gland with a hook spaner wrench.

4) Wrap the supplied spiral tube around the power cable for the de-icer, starting from the crimp-on lugs. Set the supplied locking wire saddle at location (6) in the right figure. Pass the cable through locking wire saddles (1) to (6).

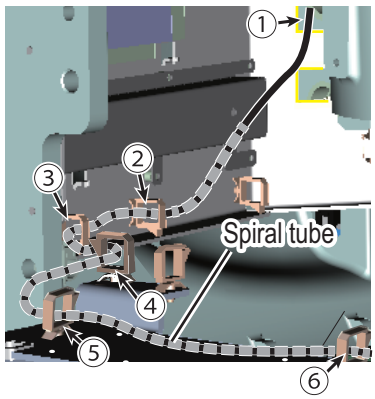

5) Unfasten the cable band on the font cover. Pass the cable for the de-icer through the band then fasten the band. Connect the cable to TB901 on the DE-ICER board (03P9573), using the crimp-on lugs supplied.

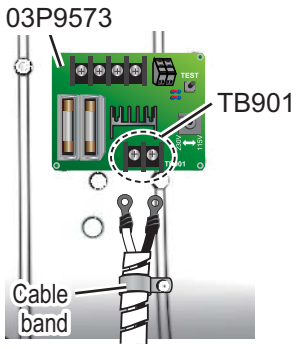

6) For 100-115V power supply, set the voltage selection switch to 115V. (default setting: 230V) Turn on the power to the deicer then press the [TEST] button about ten seconds. Check if the heater gets hot. Turn off the power to the de-icer.

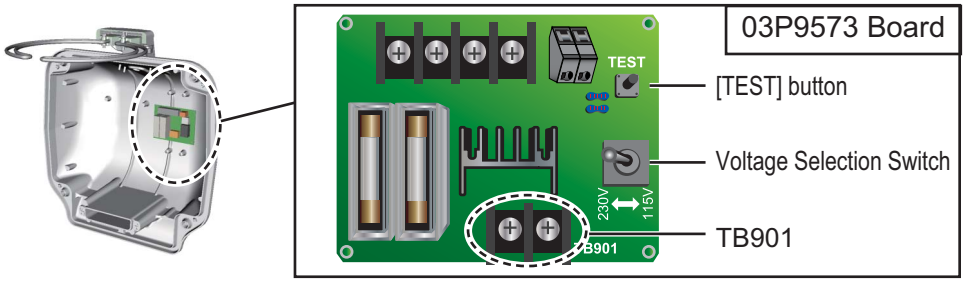

7) Fasten the front cover, then fasten the cable entrance for the DE-ICER. When fastening the front cover, spread open the heater elements, lifting the base of the heater. Take care not to hit the heater elements on the chassis or radiator.

8) Fasten the two heater elements to the chassis. Fasten the base of the heater with two M5 screws (supplied) coated with marine sealant supplied. Fasten the installation materials to each of the cover bolts.

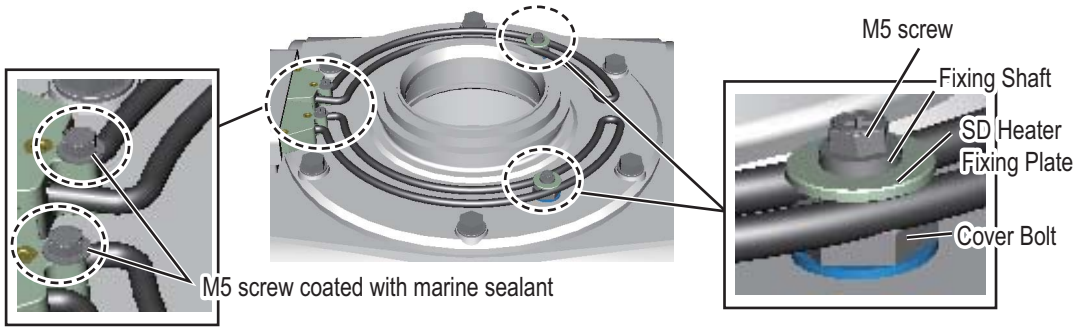

9) Attach the supplied earth label over the earth label attached near the grounding terminal.

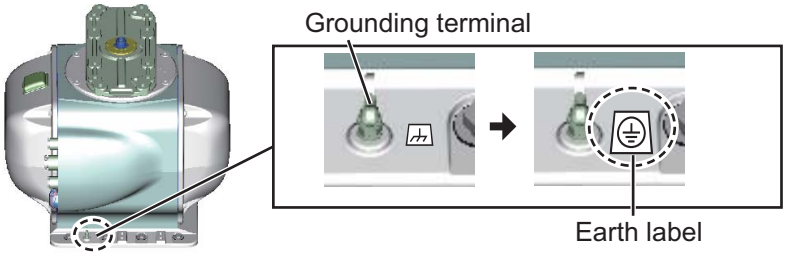

Note: If it is necessary to open the front cover after installing the DE-ICER kit, remove the power cable from the locking wire saddle in the right figure then detach the cover slowly to prevent damage to the heater.

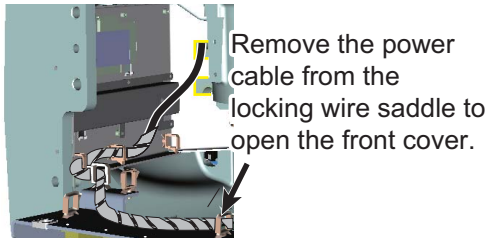

14. Re-mount the RF unit then reconnect the connectors for the motor (J803, J840 and J804), the four bolts (see step 4) and the coaxial cable (see step 3).
15. Pass the LAN cable of the antenna cable from the cable entrance through two locking wire saddles to the LAN port at the bottom of the RF unit (J821).

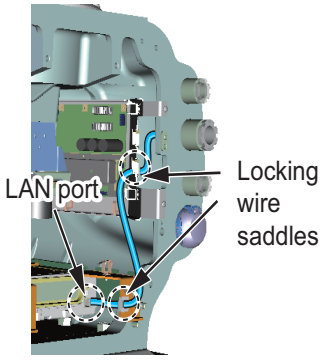

16. Attach appropriate WAGO connector (supplied) to both the antenna cable and the cable for the sub monitor. Connect the antenna cable and the cable for the sub monitor to the RF-TB Board as shown below. A terminal opener is provided on the RF-TB Board.

- **Antenna cable:**
  Power: TB801 on RF-TB Board (03P9570)

Pin	1	2	3	4	5	6	7	8	9	10	11
Color				BRN	RED	ORG	YEL	GRN	BLU	PPL	WHT

How to connect wires to WAGO connector

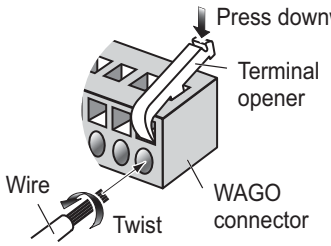

<Procedure>
1. Twist the cores.
2. Press the terminal opener downward.
3. Insert the wire to hole.
4. Remove the terminal opener.
5. Pull the wire to confirm that it is secure.

LAN: J821 on RF-TB board
Shields: For the power cable, screw on RF-TB Board (03P9570).
For the LAN cable, screw near the LAN slot.
For the antenna cable RW-9600, connect the crimp-on lug (that binds unused wires) together with the shield of the power cable.

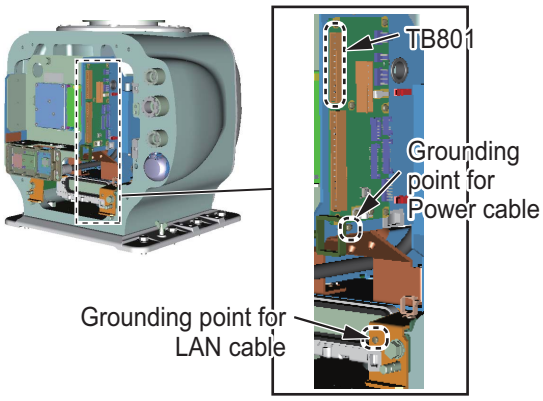

- **Cable for sub monitor:**
  Signal: TB803 on RF-TB board

Pin	1	2	3	4	5	6	7	8	9	10	11	12	13	14	15	16
Color											BRN	RED	ORG	YEL	WHT	BLK

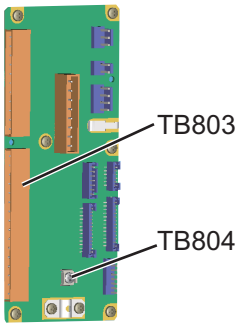

Coax. cable: TB804 on RF-TB board

How to fasten the coaxial cable

NOTICE

Do not use crimp-on lug, to prevent contact resistance from increasing.

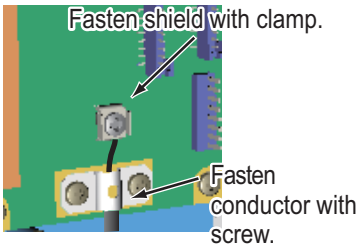

Shield: Screw on chassis.

17. Reconnect the performance monitor connector (J807), see step 2 on page 2-5.
18. Check that the gasket on the rear cover is seated properly, then close the covers. The torque must be 21.0 N•m.