2. INITIAL SETUP

⚠ WARNING

The radar antenna emits electromagnetic radio frequency (RF) energy which can be harmful, particularly to your eyes. Never look directly into the antenna aperture from a close distance while the radar is in operation or expose yourself to the transmitting antenna at a close distance.

Distances at which RF radiation levels of 100, 50 and 10 W/m^2 exist are given in the table below.

Radiator	100 W/m^2	50 W/m^2	10 W/m^2
XN10A	N/A	N/A	0.7 m
XN12A	N/A	N/A	0.6 m
XN13A	N/A	N/A	0.4 m

⚠ WARNING

Before turning on the radar, be sure no one is near the antenna.

Prevent the potential risk of being struck by the rotating antenna, which can result in serious injury or death.

Vessels equipped with SC-50/60/110/120

For the comfort use of target analyzer function, an appropriate time need to be set in the [SMOOTH S/C] menu. When the time set in this menu is too long, the landmass can be judged as approaching target and displayed in red while accelerating, decelerating or turning. If this symptom occur too often, shorten the time in [SMOOTH S/C] menu.

Note: Unstableness of COG and SOG can be larger when the [SMOOTH S/C] time become shorter. Set the time avoiding the influence to other navigational equipment, such as GPS plotter and autopilot.

Installation with Multi Function Displays

This radar series is compatible with the FURUNO Multi Function Displays and software version combinations shown below. The combination with other models may not operate properly.

- TZT9, TZT14 and TZTBB: Version 5.01 or later
  TZTL12F and TZTL15F: Version 5.01 or later

Turn on the antenna unit and FURUNO Multi Function Display. Initial setup for this antenna must be done on the FURUNO Multi Function Display.

2.1 Initial Setup for TZT9/TZT14/TZTBB

1. Press the **Home** key (or tap the **Home** icon).
2. Select [Menu] on the menu icon bar to open the main menu.
3. Select [Radar].
4. Select [Radar Source] on the [Menu Radar] sub menus, then select the radar type connected.
   Note: If the antenna unit is connected but does not appear in the [Radar Source] list, close the list and open it again. The name of the antenna unit should appear with a check mark, as in the example to the right.

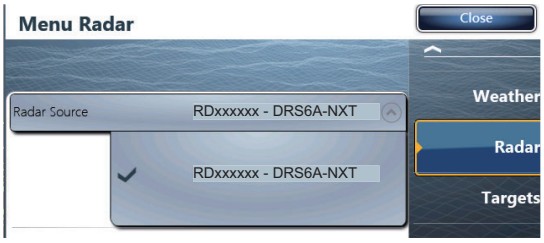

Display example

5. Drag the [Menu Radar] sub menus to find the menu item [Radar Initial Setup].

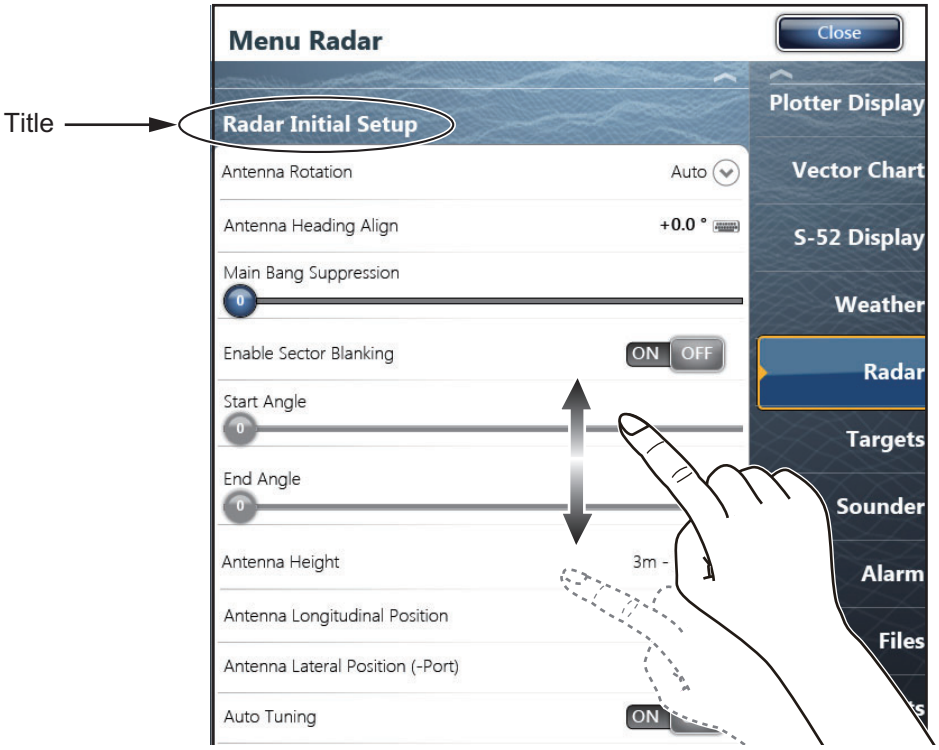

6. Set the items referring to the table shown below

Menu Radar (Radar Initial Setup)

Menu item	Description
[Antenna Rotation]	Select the antenna rotation speed.
[Antenna Heading Align]	See "How to align the antenna heading" on page 17.
[Main Bang Suppression]	If main bang appears at the screen center, slide the circle icon, while watching the radar echo on the left-side of the display, until the main bang disappears.
[Enable Sector Blanking]/ [Enable Sector Blanking2]	Up to two sectors may be selected for blanking (no transmission). Select [ON] to enable this feature. Set the start and end angles (0° to 359°).
[Antenna Height]	Select the height of the antenna above the waterline.

Menu item	Description
[Antenna Length]	Selects the length of the antenna. RezBoost function reflects the selection of this menu item.
[Antenna Longitudinal Position]	Referring to the figure on the right, enter the radar antenna positioning bow-stern (Longitudinal) and port-starboard (Lateral) position from the origin.
[Antenna Lateral Position (-Port)]	
[Radar Monitoring]	Display various information regarding the connected radar.
[ARPA Advanced Settings]	For service technician only. Do not change these settings. This menu item is available when setting the radar in transmit.
[TX Channel]	Select [1],[2] or [3], the channel where the interference is smallest.
[Target Analyzer Mode]	You can emphasize rain clutter or target echoes when the target analyzer is active. Select [Rain] or [Target] as appropriate.
[Auto Acquire by Doppler]	When selecting [ON], approaching targets within 3 NM from own ship are automatically acquired by the Doppler calculated from the radar echo.
[Hardware Factory Default]	Resets the radar selected at [Radar Source] to factory default.
[Reset Default Settings]	Resets [Radar] menu settings to default.

How to align the antenna heading

You have mounted the antenna unit facing straight ahead in the direction of the bow. Therefore, a small but conspicuous target dead ahead visually should appear on the heading line (zero degrees).

You may observe a minor bearing error on the display. This is due to the difficulty in orienting the radar accurately. The following adjustment will compensate for the error.

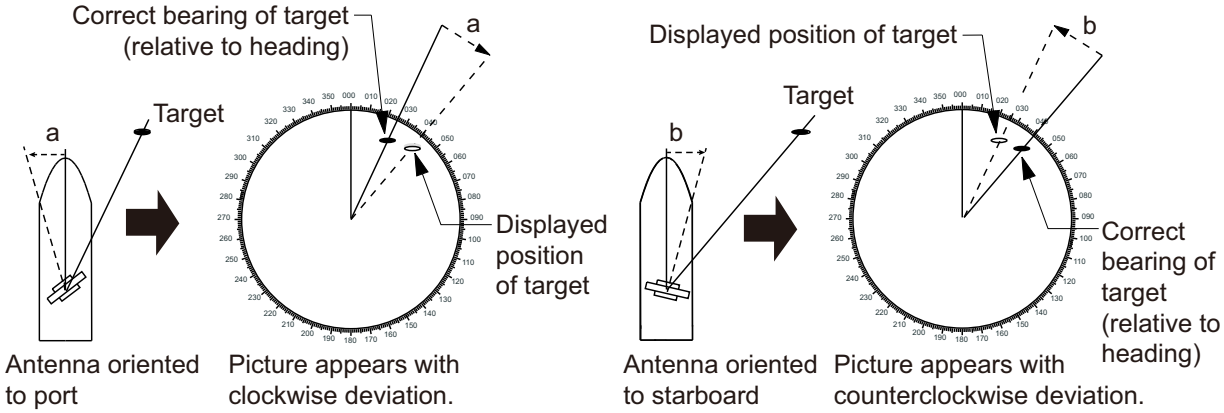

1. Select a range between 0.125 and 0.25 NM and set the mode to “head up“. You can select a range by a pinch action. The range and range ring interval appear at the bottom left of the screen.

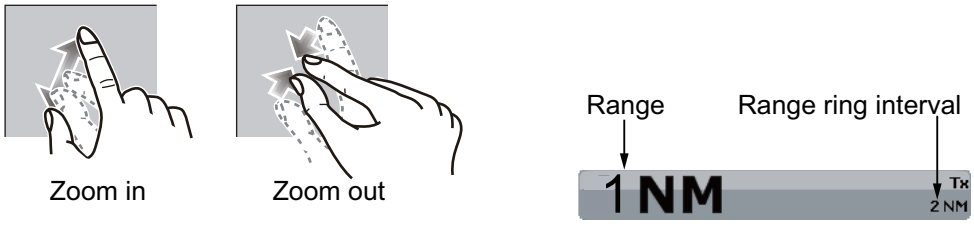

Pinch action *Range indications*

For TZTBB, you can also control the range in the operation as follows. Tap the radar scale box at the bottom left-hand corner of the screen to display the slider bar. Drag the circle icon to set the range scale.

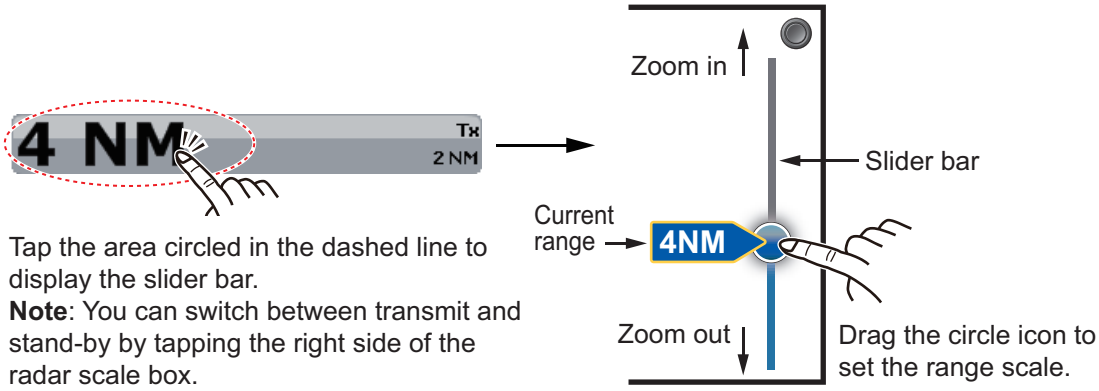

Tap the area circled in the dashed line to display the slider bar.
Note: You can switch between transmit and stand-by by tapping the right side of the radar scale box.

2. Turn the vessel’s bow toward a target.
3. Press the **Home** key (or tap the **Home** icon), then select [Menu] icon, [Radar], and [Antenna Heading Align] in that order to show the numeric software keyboard.
4. Key in the offset value so that the target is at the very top of the screen (setting range: +/- 0° to 180°, +: clockwise direction, -: counterclockwise direction), then tap [Save].
5. Confirm that the target echo is displayed at correct bearing on the screen.

2.2 Initial Setup for TZTL12F/TZTL15F

1. Tap the [Home] icon to show the home screen and display mode settings.
2. Tap [Radar] from the [Settings] menu.
3. Tap [Radar Source], then select the appropriate antenna unit.
   Note: If the antenna unit is connected but does not appear in the [Radar Source] list, close the list and open it again. The name of the antenna unit should appear with a check mark, as in the example below.

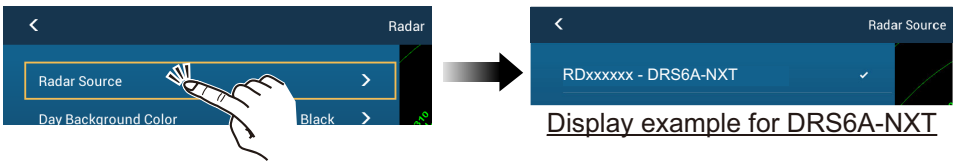

Display example for DRS6A-NXT

4. Drag the [Radar] menu display the menu item [Radar Initial Setup], then tap [Radar Initial Setup].
5. Referring to the tables below, set up the radar.

[Radar] menu - [Radar Initial Setup]

Menu item	Description
[Antenna Rotation]	Select the antenna rotation speed.
[Antenna Heading Align]	See "How to align the antenna heading" on page 19.
[Main Bang Suppression]	If main bang appears at the screen center, slide the circle icon so that the main bang disappears, while watching the radar echo at the left-hand side of the display.
[Enable Sector Blanking]	Up to two sectors may be selected for blanking (no transmission). Select [ON] to enable this feature. Set the start and end angles (0° to 359°).
[Enable Sector 2 Blanking]	

[Radar] menu - [Antenna Position]

Menu item	Description
[Longitudinal (from bow)]	Referring to the figure on the right, enter the radar antenna positioning bow-stern (Longitudinal) and port-starboard (Lateral) position from the origin.
[Lateral (-Port)]	
[Antenna Height]	Selects the height of the antenna above the waterline.
[Antenna Length]	Selects the length of the antenna. RezBoost function reflects the selection of this menu item.
[Radar Monitoring]	Display various information regarding the connected radar.
[TX Channel]	Select [1], [2] or [3], the channel where the interference is smallest.
[Target Analyzer Mode]	You can emphasize rain clutter or target echoes when the target analyzer is active. Select [Rain] or [Target] as appropriate.
[Auto acquire by Doppler]	When selecting [ON], approaching targets within 3 NM from own ship are automatically acquired by the Doppler calculated from the radar echo.
[Set Hardware To Factory Default]	Resets the radar selected at [Radar Source] to factory default.
[Reset Default Settings]	Resets [Radar] menu settings to default.

How to align the antenna heading

You have mounted the antenna unit facing straight ahead in the direction of the bow. Therefore, a small but conspicuous target dead ahead visually should appear on the heading line (zero degrees).

You may observe a minor bearing error on the display. This is due to the difficulty in orienting the radar accurately. The following adjustment will compensate for the error.

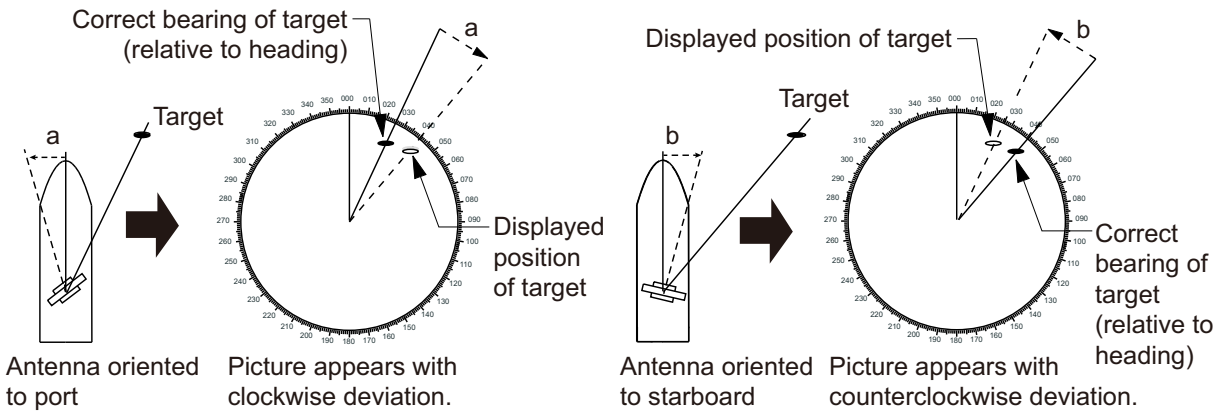

1. Set your radar with 0.125 and 0.25 NM range and the head up mode.
   The range scale can be selected two ways, as shown below. The slider bar can be shown or hidden with [Show Scale Slider] in the [Settings] - [Radar] menu.

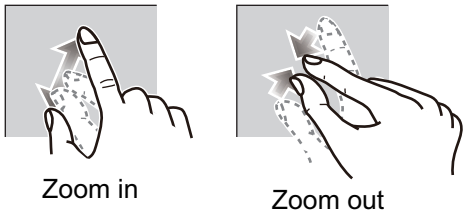

Method 1: Pinch screen

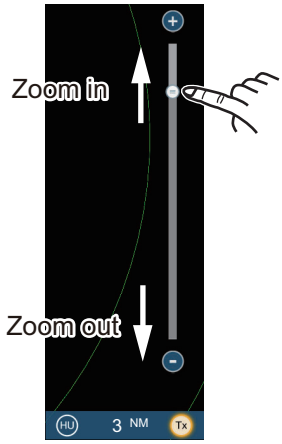

Method 2: Drag slider
(or tap bar or +, - icons)

2. Turn the vessel's bow toward a target.
3. Tap the [Home] icon to show the home screen and display mode settings.
4. Tap [Radar] to show the [Radar] menu.
5. Drag the [Radar] menu to show the [RADAR INITIAL SETUP] menu.
6. Tap [Antenna Heading Align].
7. Key in the offset value so that the target is displayed at the very top of the screen (setting range: +179.9° to -180°, +: clockwise direction, -: counterclockwise direction), then tap the ✓ icon.
8. Confirm that the target echo is displayed at correct bearing on the screen.

3. MAINTENANCE, TROUBLE SHOOTING

Periodic checks and maintenance are important for proper operation of any electronic system. This chapter contains maintenance and troubleshooting instructions to be followed to obtain optimum performance and the longest possible life of the equipment. Before attempting any maintenance or troubleshooting procedure, please review the safety information below and at the front of this manual. If you cannot restore normal operation after following the troubleshooting procedures, do not attempt to check inside any unit; there are no user serviceable parts inside. Contact your dealer to check the equipment.

⚠ WARNING

Do not open the equipment.

Hazardous voltage which can cause electrical shock exists inside the equipment. Only qualified personnel should work inside the equipment.

Turn off the antenna unit before servicing the unit. Post a warning sign near the switch indicating it should not be turned on while the antenna unit is being serviced.

Prevent the potential risk of being struck by the rotating antenna.

A transmitting radar antenna emits electromagnetic waves, which can be harmful, particularly the eyes.

Wear a safety belt and hard hat when working on the antenna unit.

Serious injury or death can result if someone falls from the radar antenna mast.

NOTICE

Do not apply paint, anti-corrosive sealant or contact spray to coating or plastic parts of the equipment.

Those items contain organic solvents that can damage coating and plastic parts, especially plastic connectors.

3.1 Maintenance

Regular maintenance is important for good performance. Check the points mentioned below every 3 to 6 months to keep the antenna unit in good working order.

Check point	Action	Remedy, remarks
Check points every 3 to 6 months		
Cable	Check that all cables are firmly connected and are not damaged.	• Connect a cable if it has loosened. • Replace damaged cables.
Exposed bolts and nuts	Check that bolts and nuts are not corroded and are securely fastened.	• Replace corroded bolts. • Tighten loosened bolts. • Coat new bolts with marine sealant.
Radiator	Dust, dirt and salt deposits on the radiator cause signal attenuation, resulting in loss of sensitivity.	• Wipe radiator with a freshwater-moistened cloth. • The radiator is made of AES (Acrylonitrile-Ethylene-Styrene) resin. Therefore, do not used gasoline, benzene and the like to clean the radiator. • If the radiator is iced, use a wooden or plastic headed hammer to remove the ice. DO NOT use a steel hammer.
Ground connection	Check for tight connection and rust.	• Fasten if loosened. • Remove rust if present.
Check points every year		
	Check the scanner unit for rust, corrosion and chipped paint.	• If the scanner unit has rusted or the paint has chipped, paint the affected area of the scanner unit. • Do not paint the antenna (see figure below). Paint on the antenna can cause loss of sensitivity and crack the antenna. 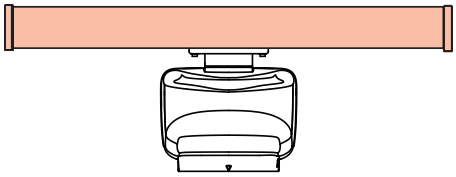 : Do NOT paint. : Painting area

3.2 Troubleshooting

The table below provides simple troubleshooting procedures to restore normal operation. If you cannot restore normal operation, contact your dealer for advice.

Problem	Remedy
The multi function display cannot control the radar.	• Check that all cables are tightly fastened. • Check if the radar source setting is correct. • Check if the fuse of the cable assembly has blown. • Check that the power supply is compatible with the voltage rating of the antenna unit.
Marks and characters appear, but echoes do not appear.	• Check that the antenna cable is tightly fastened. • Check the cables for damage.
Picture is not updated or the picture freezes.	• Check that all cables are tightly fastened. • Check the cables for damage. • If the picture has frozen, reboot the multi function display.
You changed the range, but the radar picture does not change.	• Try to change the range again. • Reboot the multi function display.
Poor discrimination in range.	• Adjust the sea control.
Range rings are not displayed.	• Check if the range rings is turned on in the menu.
You set the radar in the transmit state. The "TX screen" appears momentarily, but the radar soon goes into stand-by.	• The overload protection has activated. To restore normal operation, turn off all equipment in the network. Wait a few seconds then turn on all the equipment.

3.3 Replacement of Fuse

The fuse in the fuse holder on the supplied cable assembly protects the antenna unit from overcurrent and equipment fault. If you cannot turn on the power, check the fuse to see if it has blown. If the fuse has blown, find the reason before you replace the fuse. If the fuse blows again after the replacement, contact your dealer.

Name	Type	Code No.	Remarks
Fuse	ATV10A60V	000-192-660-10	10 A fuse For 24 VDC Ship's Main
	ATV15A60V	000-193-631-10	15 A fuse For 12 VDC Ship's Main

⚠ WARNING

Use the proper fuse.

Use of a wrong fuse can cause fire or damage the equipment.

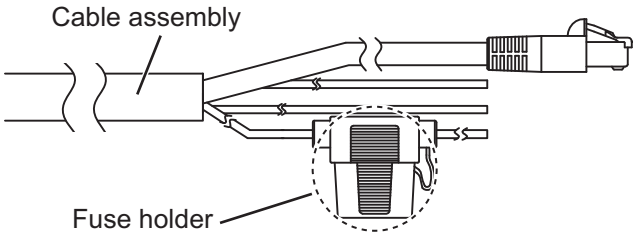

How to replace the fuse

Open the fuse holder cover and replace the fuse. Then close the cover.

3.4 Life of Parts

Antenna Motor

When an antenna motor reaches the end of its life, the antenna's rotation may stop or abnormal noise sounds from the antenna unit. If such symptom occurs, contact your dealer about replacement of the antenna motor.

Name	Type	Code No.	Approx. Life
Antenna Motor	RSB-134/137 MOTOR	001-426-690	10,000 hours

APPENDIX 1 RADIO REGULATORY INFORMATION

USA-Federal Communications Commission (FCC)

This device complies with part 15 of the FCC Rules. Operation is subject to the following two conditions:
(1) This device may not cause harmful interference, and
(2) This device must accept any interference received, including interference that may cause undesired operation. Any changes or modifications not expressly approved by the party responsible for compliance could void the user's authority to operate the equipment.

Caution: Exposure to Radio Frequency Radiation

- This equipment complies with FCC radiation exposure limits set forth for an uncontrolled environment and meets the FCC radio frequency (RF) Exposure Guidelines in Supplement C to OET65.
- This equipment should be installed and operated keeping the radiator at least 70 cm or more away from person's body.

Antenna Models	Safety Distance
XN10A	0.7 m
XN12A	0.6 m
XN13A	0.4 m

- This device must not be co-located or operating in conjunction with any other antenna or transmitter.

Canada-Industry Canada (IC)

Caution: Exposure to Radio Frequency Radiation

This equipment complies with IC radiation exposure limits set forth for an uncontrolled environment and meets RSS-102 of the IC radio frequency (RF) Exposure rules. This equipment should be installed and operated keeping the radiator at least 70 cm or more away from person's body.

Antenna Models	Safety Distance
XN10A	0.7 m
XN12A	0.6 m
XN13A	0.4 m

Cet équipement est conforme aux limites d'exposition aux rayonnements énoncées pour un environnement non contr êolé et respecte les règles d'exposition aux fréquences radioélectriques (RF) CNR-102 de l'IC. Cet équipement doit etre installé et utilise en gardant une distance de 70 cm ou plus entre le dispositif rayonnant et le corps.

To reduce potential radio interference to other users, the antenna type and its gain should be so chosen that the equivalent isotropically radiated power (EIRP) is not more than that required for successful communication.

SPECIFICATIONS OF RADAR SENSOR DRS6A-NXT

1 ANTENNA UNIT

1.1	Antenna type	Slotted waveguide array
1.2	Antenna length	3.4 ft (XN10A), 4 ft (XN12A), 6 ft (XN13A)
1.3	Horizontal beam width	2.3° (XN10A), 1.9° (XN12A),1.4° (XN13A)
1.4	Vertical beam width	22°
1.5	Gain	27.5 dBi (XN10A), 28.5 dBi (XN12A), 30 dBi (XN13A)
1.6	Sidelobe attenuation	
	XN10A	-20 dB (within ±10°), -28 dB (±10° or more)
	XN12A	-27 dB (within ±10°), -34 dB (±10° or more)
	XN13A	-29 dB (within ±10°), -37 dB (±10° or more)
1.7	Rotation	24/36/48 rpm range coupled or 24 rpm fixed
1.8	Relative wind load	70 kn or less

2 RADAR FUNCTION

2.1	Tx frequency	3 channel, auto/manual selectable
	Ch.1 (P0N/Q0N)	9380/9400 MHz
	Ch.2 (P0N/Q0N)	9400/9420 MHz
	Ch.3 (P0N/Q0N)	9420/9440 MHz
2.2	Output power	25 W
2.3	Duplexer	Ferrite circulator with diode limiter
2.4	Intermediate frequency	83.75/103.75 MHz (P0N/Q0N)

2.5 Range, Pulse length and Pulse Repetition Rate (PRR)

Range (NM)	Pulse length [P0N/Q0N] (μs)	PRR (Hz. approx.)
0.0625	0.04/5.0	2000
0.125 to 0.75	0.08/5.0	2000
1 to 1.5	0.15/7.5	2000
2	0.3/11	2000
3 to 4	0.5/13	2000
6 to 8	0.8/15	1100
12 to 24	1.2/18	1100
32 to 72	1.2/48	700

2.6	Minimum range	10 m
2.7	Range resolution	10 m
2.8	Range accuracy	Within 1% of range in use
2.9	Bearing resolution	2.3° (XN10A),1.9° (XN12A), 1.4° (XN13A)
2.10	Bearing accuracy	Within ±1°
2.11	Warm-up time	Nil
2.12	Target tracking (TT)	Auto or manual acquisition: 100 targets between 0.1 and 24 NM
		Past position: 5/10 pts on all activated targets
		Vector time: 1 to 60 min.

3 INTERFACE

LAN: 1 port, Ethernet, 100Base-TX

4 POWER SUPPLY

12/24 VDC: 9.5/5.0 A max.

5 ENVIRONMENTAL CONDITIONS

5.1	Ambient temperature	-25°C to +55°C (storage: -30°C to +70°C)
5.2	Relative humidity	95% or less at +40°C
5.3	Degree of protection	IP56
5.4	Vibration	IEC 60945 Ed.4

6 UNIT COLOR

N9.5

FURUNO

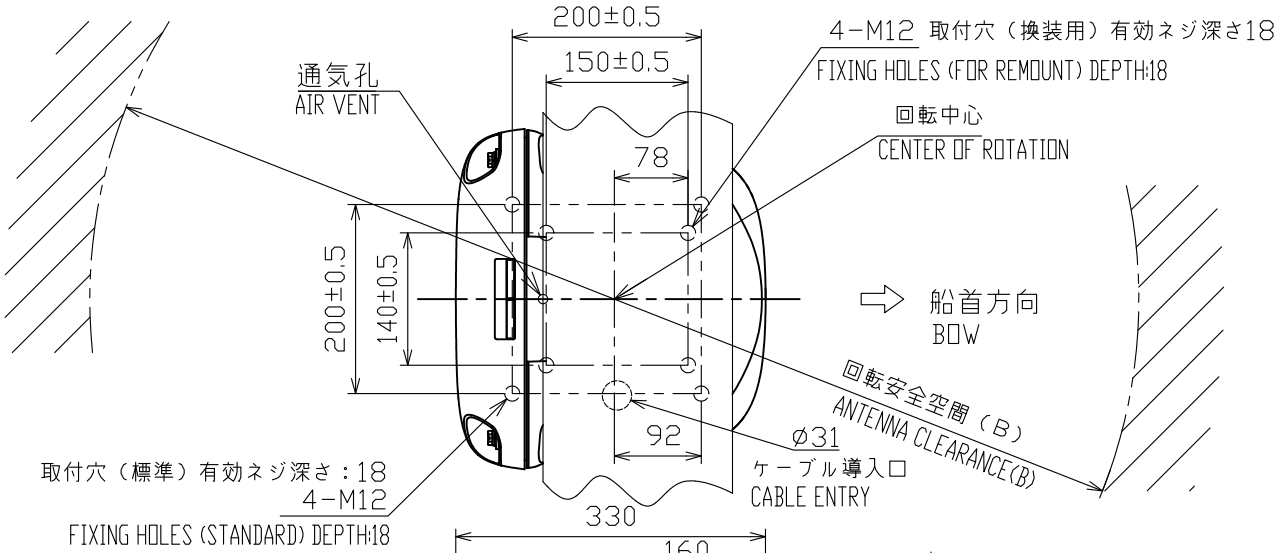

表2 TABLE 2

輻射器 RADIATOR	XN10A	XN12A	XN13A
空中線長（A)(mm) ANTENNA LENGTH	1036±10	1255±10	1795±10
回転安全空間（B)(mm) ANTENNA CLEARANCE	1200	1400	1940
質量（kg±10%) MASS	20	21	23

表1 TABLE 1

寸法区分（mm） DIMENSION	公差（mm） TOLERANCE
L≦50	±1.5
50<L≦100	±2.5
100<L≦500	±3
500<L≦1000	±4
1000<L≦2000	±5

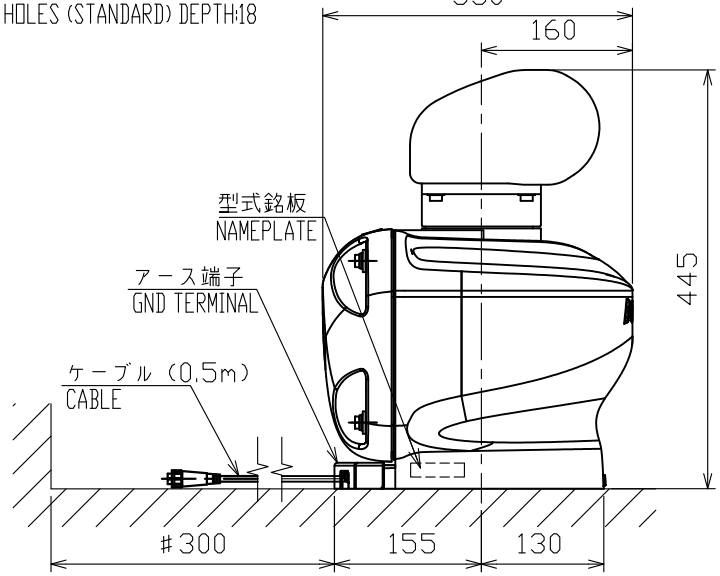

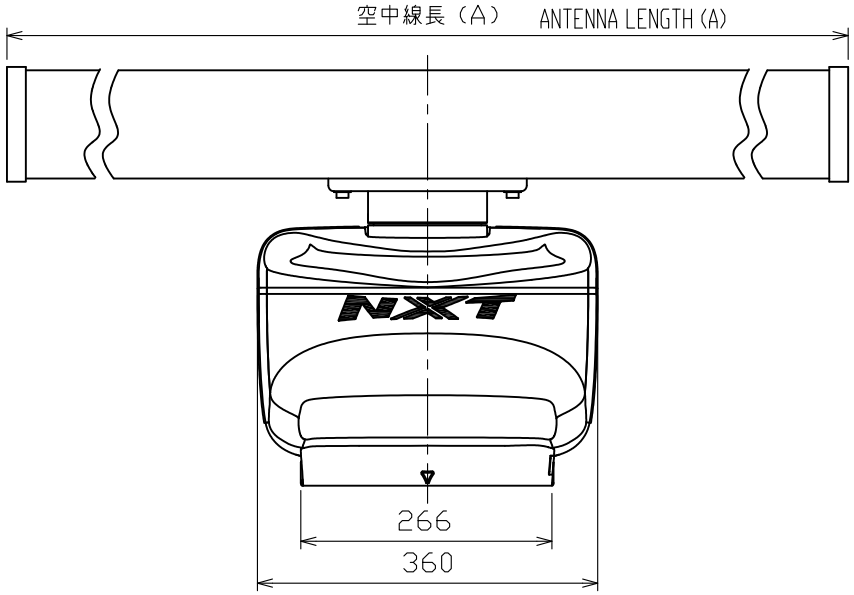

注記 1）指定外寸法公差は表1による。
2）#印寸法は最小サービス空間寸法とする。
3）取付はM12寸切ボルトを使用のこと。

NOTE 1. TABLE 1 INDICATES TOLERANCE OF DIMENSIONS WHICH IS NOT SPECIFIED.
2. #: MINIMUM SERVICE CLEARANCE.
3. USE M12 STUD BOLT FOR FIXING THE UNIT.

DRAWN 2/Feb/2017 T.YAMASAKI			TITLE RSB-137
CHECKED 2/Feb/2017 H.MAKI			名称 空中線部
APPROVED 2/Feb/2017 H.MAKI		DRS6A-NXT	外寸図
SCALE 1/8	MASS 表2参照 TABLE 2		NAME ANTENNA UNIT
DWG.No. C3668-G01- A		REF.No. 03-194-300G-1	OUTLINE DRAWING

FURUNO ELECTRIC CO., LTD.

FURUNO

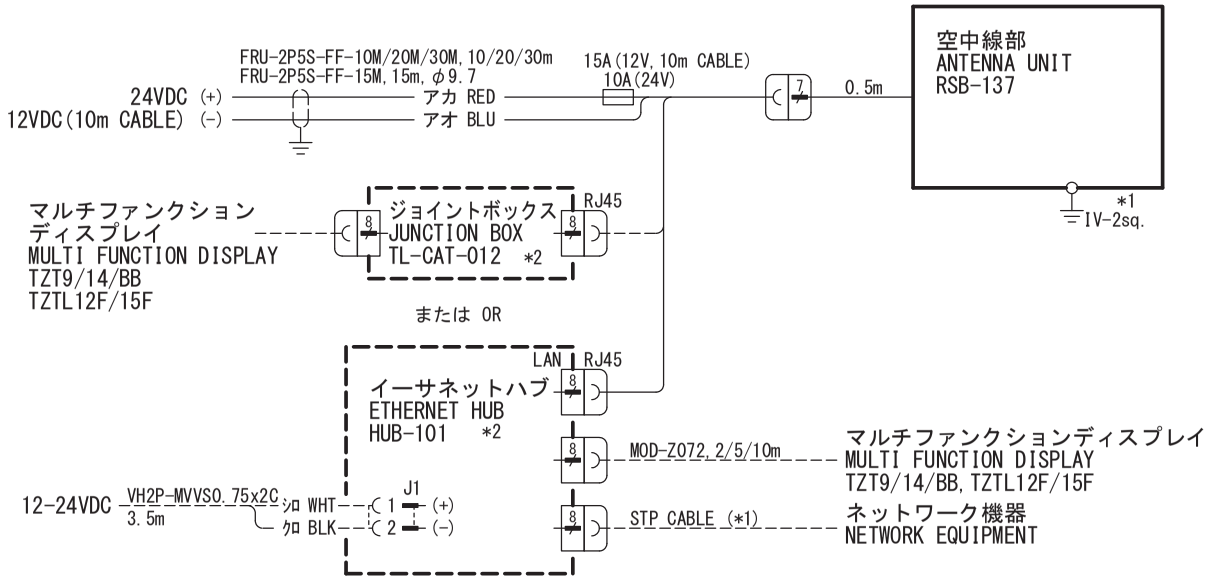

注記
＊１）造船所手配。
＊２）オプション。

NOTE
*1: SHIPYARD SUPPLY.
*2: OPTION.

DRAWN 3/Feb/2017 T. YAMASAKI			TITLE DRS6A-NXT
CHECKED 3/Feb/2017 H. MAKI			名称 レーダーセンサー
APPROVED 3/Feb/2017 H.MAKI			相互結線図
SCALE	MASS kg		NAME RADAR SENSOR
DWG. No. C3668-C01- A	REF. No. 03-194-6011-0		INTERCONNECTION DIAGRAM

S-1

牧宏昌

FURUNO ELECTRIC CO., LTD.

Declaration of Conformity

[DRS6A-NXT]

Bulgarian (BG)	С настоящото Furuno Electric Co., Ltd. декларира, че гореспоменат тип радиосъоръжение е в съответствие с Директива 2014/53/ЕС. Цялостният текст на ЕС декларацията за съответствие може да се намери на следния интернет адрес:
Spanish (ES)	Por la presente, Furuno Electric Co., Ltd. declara que el tipo de equipo radioeléctrico arriba mencionado es conforme con la Directiva 2014/53/UE. El texto completo de la declaración UE de conformidad está disponible en la dirección Internet siguiente:
Czech (CS)	Tímto Furuno Electric Co., Ltd. prohlašuje, že výše zmíněné typ rádiového zařízení je v souladu se směrnicí 2014/53/EU. Úplné znění EU prohlášení o shodě je k dispozici na této internetové adrese:
Danish (DA)	Hermed erklærer Furuno Electric Co., Ltd., at ovennævnte radioudstyr er i overensstemmelse med direktiv 2014/53/EU. EU-overensstemmelseserklæringens fulde tekst kan findes på følgende internetadresse:
German (DE)	Hiermit erklärt die Furuno Electric Co., Ltd., dass der oben genannte Funkanlagentyp der Richtlinie 2014/53/EU entspricht. Der vollständige Text der EU-Konformitätserklärung ist unter der folgenden Internetadresse verfügbar:
Estonian (ET)	Käesolevaga deklareerib Furuno Electric Co., Ltd., et ülalmainitud raadioseadme tüüp vastab direktiivi 2014/53/EL nõuetele. ELi vastavusdeklaratsiooni täielik tekst on kättesaadav järgmisel internetiaadressil:
Greek (EL)	Με την παρούσα η Furuno Electric Co., Ltd., δηλώνει ότι ο προαναφερθέντας ραδιοεξοπλισμός πληροί την οδηγία 2014/53/ΕΕ. Το πλήρες κείμενο της δήλωσης συμμόρφωσης ΕΕ διατίθεται στην ακόλουθη ιστοσελίδα στο διαδίκτυο:
English (EN)	Hereby, Furuno Electric Co., Ltd. declares that the above-mentioned radio equipment type is in compliance with Directive 2014/53/EU. The full text of the EU declaration of conformity is available at the following internet address:
French (FR)	Le soussigné, Furuno Electric Co., Ltd., déclare que l'équipement radioélectrique du type mentionné ci-dessusest conforme à la directive 2014/53/UE. Le texte complet de la déclaration UE de conformité est disponible à l'adresse internet suivante:
Croatian (HR)	Furuno Electric Co., Ltd. ovime izjavljuje da je gore rečeno radijska oprema tipa u skladu s Direktivom 2014/53/EU. Cjeloviti tekst EU izjave o sukladnosti dostupan je na sljedećoj internetskoj adresi:
Italian (IT)	Il fabbricante, Furuno Electric Co., Ltd., dichiara che il tipo di apparecchiatura radio menzionato sopra è conforme alla direttiva 2014/53/UE. Il testo completo della dichiarazione di conformità UE è disponibile al seguente indirizzo Internet:
Latvian (LV)	Ar šo Furuno Electric Co., Ltd. deklarē, ka augstāk minēts radioiekārta atbilst Direktīvai 2014/53/ES. Pilns ES atbilstības deklarācijas teksts ir pieejams šādā interneta vietnē:

Lithuanian (LT)	Aš, Furuno Electric Co., Ltd., patvirtinu, kad pirmiau minėta radijo įrenginių tipas atitinka Direktyvą 2014/53/ES. Visas ES atitikties deklaracijos tekstas prieinamas šiuo interneto adresu:
Hungarian (HU)	Furuno Electric Co., Ltd. igazolja, hogy fent említett típusú rádióberendezés megfelel a 2014/53/EU irányelvnek. Az EU-megfelelőségi nyilatkozat teljes szövege elérhető a következő internetes címen:
Maltese (MT)	B'dan, Furuno Electric Co., Ltd., niddikjara li msemmija hawn fuq-tip ta' tagħmir tar-radju huwa konformi mad-Direttiva 2014/53/UE. It-test kollu tad-dikjarazzjoni ta' konformità tal-UE huwa disponibbli f'dan l-indirizz tal-Internet li ġej:
Dutch (NL)	Hierbij verklaar ik, Furuno Electric Co., Ltd., dat het hierboven genoemde type radioapparatuur conform is met Richtlijn 2014/53/EU. De volledige tekst van de EU-conformiteitsverklaring kan worden geraadpleegd op het volgende internetadres:
Polish (PL)	Furuno Electric Co., Ltd. niniejszym oświadcza, że wyżej wymieniony typ urządzenia radiowego jest zgodny z dyrektywą 2014/53/UE. Pełny tekst deklaracji zgodności UE jest dostępny pod następującym adresem internetowym:
Portuguese (PT)	O(a) abaixo assinado(a) Furuno Electric Co., Ltd. declara que o mencionado acima tipo de equipamento de rádio está em conformidade com a Diretiva 2014/53/UE. O texto integral da declaração de conformidade está disponível no seguinte endereço de Internet:
Romanian (RO)	Prin prezenta, Furuno Electric Co., Ltd. declară că menționat mai sus tipul de echipamente radio este în conformitate cu Directiva 2014/53/UE. Textul integral al declarației UE de conformitate este disponibil la următoarea adresă internet:
Slovak (SK)	Furuno Electric Co., Ltd. týmto vyhlasuje, že vyššie spomínané rádiové zariadenie typu je v súlade so smernicou 2014/53/EÚ. Úplné EÚ vyhlásenie o zhode je k dispozícii na tejto internetovej adrese:
Slovenian (SL)	Furuno Electric Co., Ltd. potrjuje, da je zgoraj omenjeno tip radijske opreme skladen z Direktivo 2014/53/EU. Celotno besedilo izjave EU o skladnosti je na voljo na naslednjem spletnem naslovu:
Finnish (FI)	Furuno Electric Co., Ltd. vakuuttaa, että yllä mainittu radiolaitetyyppi on direktiivin 2014/53/EU mukainen. EU-vaatimustenmukaisuusvakuutuksen täysimittainen teksti on saatavilla seuraavassa internetosoitteessa:
Swedish (SV)	Härmed försäkrar Furuno Electric Co., Ltd. att ovan nämnda typ av radioutrustning överensstämmer med direktiv 2014/53/EU. Den fullständiga texten till EU-försäkran om överensstämmelse finns på följande webbadress:

Online Resource

http://www.furuno.com/en/support/red_doc