FURUNO

Installation Manual
RADAR SENSOR
MODEL DRS6A-NXT

(Product Name: SOLID STATE DOPPLER RADAR)

SAFETY INSTRUCTIONS i
SYSTEM CONFIGURATION iii
INSTALLATION SPECIFICATIONS iv
FEATURES v
EQUIPMENT LISTS vi

1. INSTALLATION AND WIRING 1
1.1 Mounting Considerations 1
1.2 Included Items 4
1.3 Required Tools and Materials 5
1.4 Fastening the Radiator to the Radiator Bracket 6
1.5 Mounting the Antenna Unit 8
1.6 Wiring 11

2. INITIAL SETUP 15
2.1 Initial Setup for TZT9/TZT14/TZTBB 15
2.2 Initial Setup for TZTL12F/TZTL15F 18

3. MAINTENANCE, TROUBLE SHOOTING 21
3.1 Maintenance 22
3.2 Troubleshooting 23
3.3 Replacement of Fuse 23
3.4 Life of Parts 24

APPENDIX 1 RADIO REGULATORY INFORMATION AP-1
SPECIFICATIONS SP-1
OUTLINE DRAWING D-1
INTERCONNECTION DIAGRAM S-1

FURUNO ELECTRIC CO., LTD.

www.furuno.com

All brand and product names are trademarks, registered trademarks or service marks of their respective holders.

ECF
(Elemental Chlorine Free)
The paper used in this manual
is elemental chlorine free.

FURUNO ELECTRIC CO., LTD.

9-52, Ashihara-cho,
Nishinomiya, 662-8580, JAPAN

·FURUNO Authorized Distributor/Dealer

All rights reserved. Printed in Japan

Z: FEB. 2017
Z1: MAR. 09, 2017

Pub. No. IME-36680-Z1
(TASU) DRS6A-NXT

SAFETY INSTRUCTIONS

The installer of the equipment must read the safety instructions before attempting to install the equipment.

WARNING	Indicates a potentially hazardous situation which, if not avoided, can result in death or serious injury.
CAUTION	Indicates a potentially hazardous situation which, if not avoided, can result in minor or moderate injury.

Warning, Caution | Prohibitive Action | Mandatory Action

WARNING

Do not open the equipment unless you are well familiar with electrical circuits.

Only qualified personnel should work inside the equipment.

Do not disassemble or modify the equipment.

Fire, electrical shock or serious injury can result.

Wear a safety belt and hard hat when working on the antenna unit.

Serious injury or death can result if someone falls from the radar mast.

Construct a suitable service platform from which to install the antenna unit.

Serious injury or death can result if someone falls from the radar mast.

Turn off the power at the switchboard before beginning the installation.

Fire or electrical shock can result if the power is left on.

WARNING

Keep the objects away from the antenna unit, so as not to impede rotation of the antenna.

Fire, electrical shock or serious injury can result.

Be sure that the power supply is compatible with the voltage rating of the equipment.

Connection of an incorrect power supply can cause fire or damage the equipment.

Use only the specified power and signal cable.

Fire or damage to the equipment can result if a different cable is used.

Use the proper fuse.

Use of a wrong fuse can damage the equipment or cause fire.

Do not depend one navigation device for the navigation of the vessel.

For the safety of vessel and crew, the navigator must check all aids available to confirm position.

⚠ WARNING

The radar antenna emits electromagnetic radio frequency (RF) energy which can be harmful, particularly to your eyes. Never look directly into the antenna aperture from a close distance while the radar is in operation or expose yourself to the transmitting antenna at a close distance.

Distances at which RF radiation levels of 100, 50 and 10 W/m^2 exist are given in the table below.

Radiator	100 W/m^2	50 W/m^2	10 W/m^2
XN10A	N/A	N/A	0.7 m
XN12A	N/A	N/A	0.6 m
XN13A	N/A	N/A	0.4 m

⚠ CAUTION

Ground the equipment to prevent mutual interference.

It is recommended that you connect the antenna unit to a disconnecting device (circuit breaker, etc.) to control the power.

Observe the following compass safe distances to prevent deviation of a magnetic compass:

Standard compass	Steering compass
0.70 m	0.40 m

WARNING LABEL

A warning label is attached to the antenna unit. Do not remove the label.
If the label is missing or damaged, contact your dealer about replacement.

⚠ WARNING ⚠	⚠ 警 告 ⚠
To avoid electrical shock, do not remove cover. No user-serviceable parts inside.	感電の恐れあり。サービスマン以外の方はカバーを開けないで下さい。内部には高電圧部分が数多くあり、万一さわると危険です。

Name: Warning Label (2)
Type: 03-129-1001-3
Code No: 100-236-743

Importer in Europe

The following concern acts as our importer in Europe, as defined in DECISION No 768/2008/EC.
- Name: FURUNO EUROPE B.V.
- Address: Ridderhaven 19B, 2984 BT Ridderkerk, The Netherlands

Program No.

• 0359423-01.**
  ** denotes minor modifications.

CE declarations

With regard to CE declarations, please refer to our website (www.furuno.com), for further information on RoHS conformity declarations.

SYSTEM CONFIGURATION

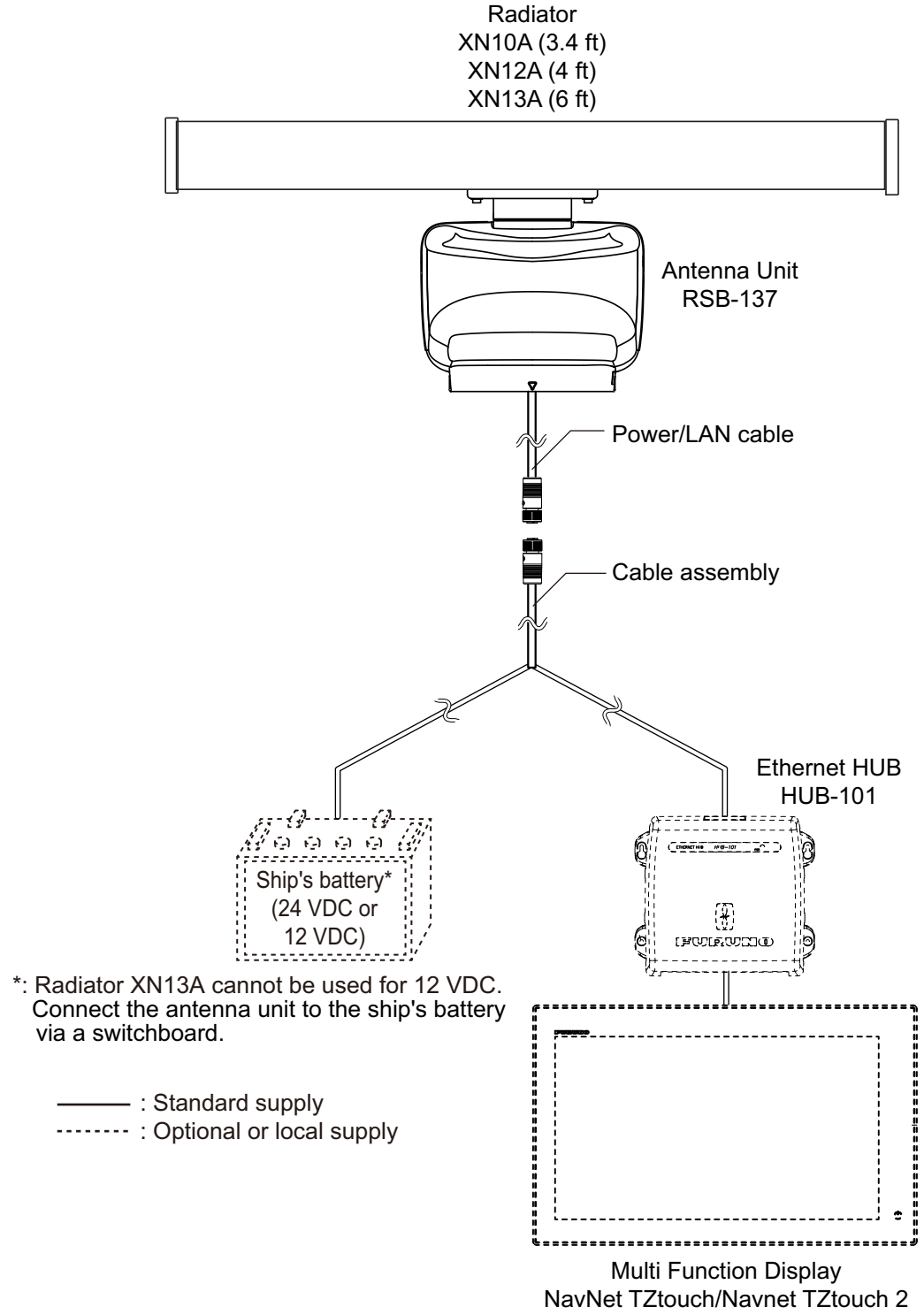

This radar series is compatible with the FURUNO Multi Function Displays and software version combinations shown below. The combination with other models may not operate properly.

- TZT9, TZT14 and TZTBB: Version 5.01 or later
  TZTL12F and TZTL15F: Version 5.01 or later

INSTALLATION SPECIFICATIONS

Voltage of Ship's Main and Usable Radiator

	Radiator		
Supply Voltage	**XN10A**	**XN12A**	**XN13A**
12 VDC	OK	OK	Not available
24 VDC	OK	OK	OK

Voltage of Ship's Main and Usable Cable Length

	Cable Length			
Supply Voltage	**10 m**	**15 m**	**20 m**	**30 m**
12 VDC	OK	Not available	Not available	Not available
24 VDC	OK	OK	OK	OK

Voltage of Ship's Main and Fuse to be used

	Cable Length			
Supply Voltage	**10 m**	**15 m**	**20 m**	**30 m**
12 VDC	15 A	Not available	Not available	Not available
24 VDC	10 A	10 A	10 A	10 A

Note: DO NOT USE 15 A fuse for 24 VDC. Use of a wrong fuse can damage the equipment or cause fire.

FEATURES

- TARGET ANALYZER* function displays targets which is moving and getting close to own ship in red, other targets in green and rain clutter in blue. Speed analyzing range is ±50 kn.
  * Requires a GPS sensor. When you change the setting of [Target Analyzer Mode] to [Rain], rain clutter is displayed.
- AUTO TARGET ACQUIRE function automatically acquires only the targets which are moving and getting close to own ship within the range of 3 NM by Doppler calculation. Automatic Doppler function will be activated when there is a target which approaches own ship with the speed of over 3 kn.
  * The judged speed of target is dependent on its vector towards own ship.
- The azimuth resolution can be enhanced to as high as twice with using the RezBoost function.
  Note 1: RezBoost function reflects the settings of [Antenna Length] which are introduced in page 2-16 and page 2-19.
  Note 2: Refer to the Operator's Manual for your Multi Function Display regarding the above new functions.
- Instant ON function. This radar sensor does not have a magnetron, therefore preheating of the magnetron is unnecessary.
- Reduced electricity emission means no need to worry about the radiation hazard.
- Magnetron-less radar means no periodic replacement of magnetron or related parts.
- The maximum display range is 72 NM in the single range mode.
- ARPA (Automatic Radar Plotting Aid) function applicable range is 24 NM at the maximum.
- Dual Range Mode has the following limitations.
  - The maximum display range is 12 NM. (72 NM when single display)
  - The maximum detection range is reduced a maximum of 20% compared to the single display.

EQUIPMENT LISTS

Standard supply

Name	Type	Code No.	Qty	Remarks
Scanner Unit	RSB-137-119	-	1	
Radiator	XN10A	-	1	3.4 ft
	XN12A	-		4 ft
	XN13A	-		6 ft
Installation Materials	CP03-37101	001-426-290	1	For scanner unit
	CP03-22901	008-523-690	1	For radiator
	CP03-37700	000-033-452	1	Cable assembly (10 m)
	CP03-37710	000-033-453		Cable assembly (15 m)
	CP03-37720	000-033-454		Cable assembly (20 m)
	CP03-37730	000-033-455		Cable assembly (30 m)
Spare Parts	SP03-19101	000-477-060	1	Fuse (10 A and 15 A)

Optional supply

Name	Type	Code No.	Remarks
LAN Cable	MOD-Z072-020+	001-167-880-10	2 m
	MOD-Z072-050+	001-167-890-10	5 m
	MOD-Z072-100+	001-167-900-10	10 m
Joint Box	TL-CAT-012	000-167-140-10	For LAN cable extension

1. INSTALLATION AND WIRING

NOTICE

Do not apply paint, anti-corrosive sealant or contact spray to coating or plastic parts of the equipment.

Those items contain organic solvents that can damage coating and plastic parts, especially plastic connectors.

1.1 Mounting Considerations

Select a mounting location, keeping in mind the following points:

- Install the antenna unit on the hardtop, radar arch or on a mast on an appropriate platform.

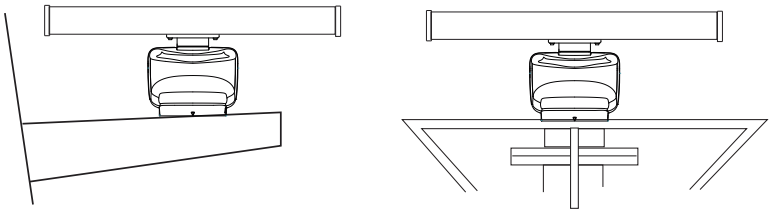

(a) Common mast (b) Radar mast

- Locate the antenna where there is a good all-round view. Where possible, there should be no obstructions to the scanning beam such as superstructure or rigging. Obstructions cause shadow sectors and decrease the overall performance of the radar. The loss of performance can cause false echoes and reduce the quality of the observed images. A mast for instance, with a diameter considerably less than the horizontal beam width of the radiator, will cause only a small shadow sector. However, a horizontal spreader, or cross trees in the same horizontal plane as the antenna unit, would be a much more serious obstruction. You would need to place the antenna unit well above or below it. Be sure there are no metallic objects near the antenna.

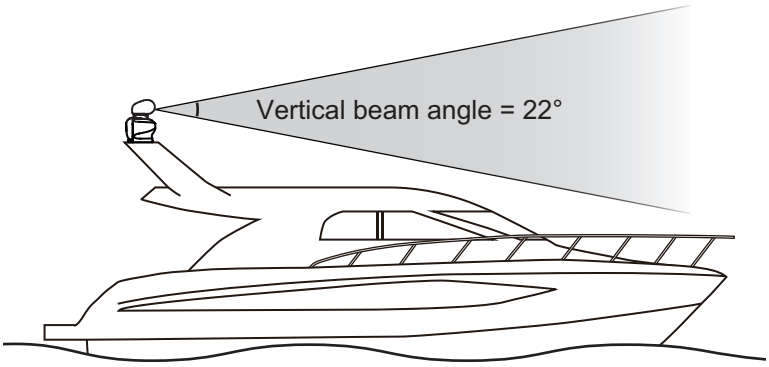

- It is rarely possible to place the antenna unit where a completely clear view in all directions is available. After fitting the antenna, determining any shadow sectors, their angle and bearing, and their influence on the radar is recommended.

- In order to reduce electrical interference, avoid routing the power cable near other electrical equipment on-board. Also, avoid running the cable in parallel with other power cables.
- It is not recommended to install the antenna unit on the hardtop of a cabin. Vibrations from the antenna unit will pass through the hardtop and into the cabin.

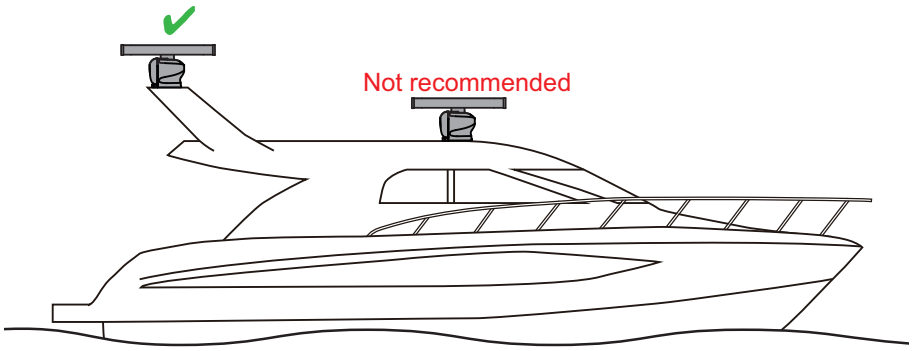

- Setup the antenna unit position on the FURUNO Multi Function Display after installing the unit, referring to the chapter 2. If the antenna unit position is not setup correctly, the radar echoes on the display may not be aligned with the actual target's bearing.
- Select a location that does not allow water to accumulate at the installation location.
- A magnetic compass will be affected if the antenna unit is too close to the compass. Observe the compass safe distances mentioned in the SAFETY INSTRUCTIONS to prevent interference to a magnetic compass.
- To ensure proper emission of radar waves, do not paint the radiator.
- Referring to the outline drawings at the back of this manual, allow space for maintenance and service.
- When this antenna unit is to be installed on a large vessel, consider the following points:
  - The supplied cable assembly runs between the antenna unit and display (or ethernet HUB) and comes in lengths of 10 m, 15 m, 20 m or 30 m. Select the appropriate length when purchasing.
  - Deposits and fumes from a funnel or other exhaust vent can adversely affect the aerial performance and hot gases may distort the antenna unit. The antenna unit must not be mounted where the temperature is more than 55°C (131°F).

Consideration for selecting a location for installation (multiple radars)

- In case multiple radars are installed on a ship, DO NOT install the DRS6A-NXT within the range of beam area emitted from other radar(s). Use the illustration below for reference when selecting a suitable location for installation. The Solid State Device (SSD) inside the DRS6A-NXT will be damaged if it is within the radar beam emission area from other radar.

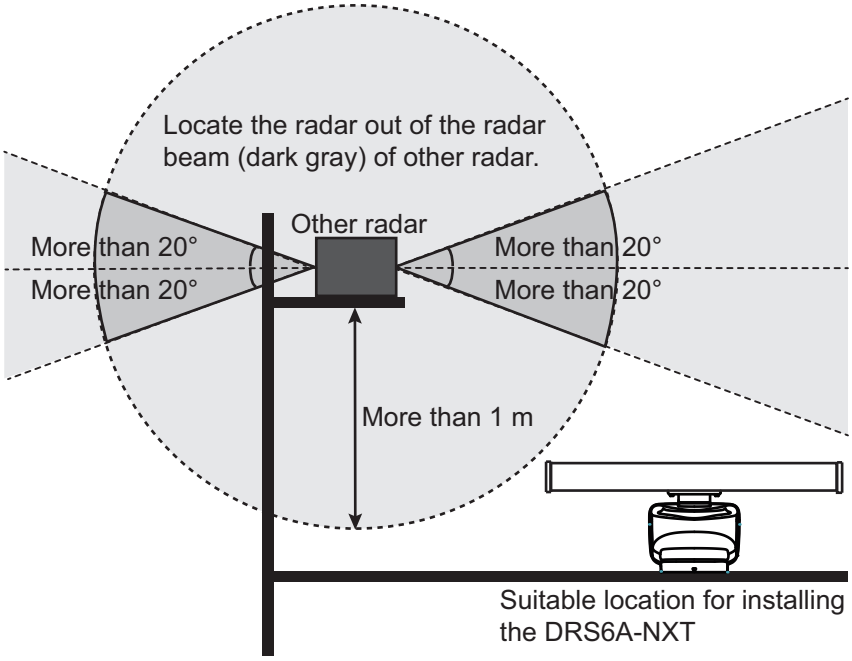

Installation with the radiotelephone equipment

- Install the open antenna away from radiocommunication antennas (SSB, VHF, Inmarasat) and GPS antenna to prevent radar interference.
- Install the open antenna away from the radiotelephone equipment so that electrical noise does not affect the radiotelephone equipment.

Cable routing

- In order to reduce the chance of picking up electrical interference, avoid, where possible, routing the power/LAN cable and cable assembly near other electrical equipment on-board. Also, avoid running the cable in parallel with other electrical cables.
- Make sure that the power/LAN cable and cable assembly do not run horizontally and it is placed away from the cables carrying radio signal and antennas.

For large vessels

- When this radar sensor is to be installed on a large vessel, consider the following points:
  - The length of the pre-attached power/LAN cable is 1 m from the open antenna to the connector.
  - Deposits and fumes from a funnel or other exhaust vent can adversely affect the aerial performance and hot gases may distort the radiator portion. The radar sensor must not be mounted where the temperature is more than 55°C (131°F).

1.2 Included Items

Radiator

- Radiator* (1 pc): 3.4 ft, 4 ft or 6 ft

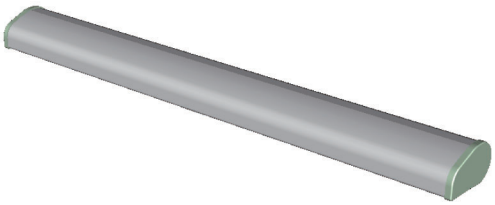

- Flat washer (M8, 4 pcs)

- Spring washer (M8, 4 pcs)

- Hex. bolt (M8×30, 4 pcs)

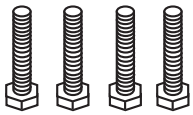

- O-ring (1 pc)

- Marine sealant (1 pc)

Scanner Unit

- Scanner Unit (1 pc)

- Flat washer (M12, 4 pcs)

- Spring washer (M12, 4 pcs)

- Hex nut (M12, 8 pcs)

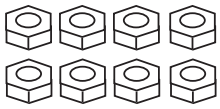

- Corrosion-proof rubber pad (4 pcs)

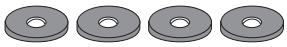

- Stud bolt (M12×70, 4 pcs)

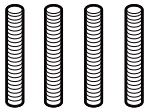

- Spare fuse (2 pcs)

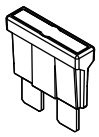

(10 A and 15 A)

- Documents (1 set)

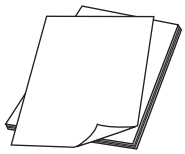

Cable assembly

- Cable assembly* (1 pc): 10 m, 15 m, 20 m or 30 m

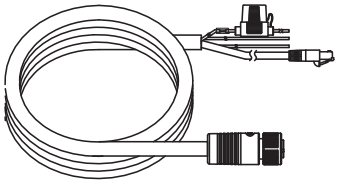

• Fuse for replacement (2 pcs for 10 m, 1 pc for others)	• Label (2 pcs for 10 m, 1pc for others)	• How to Replace the Fuse (1 pc)
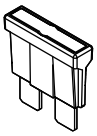	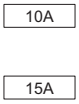	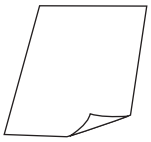

*: Select the appropriate length when purchasing.

1.3 Required Tools and Materials

The following tools should be prepared in advance for this installation.

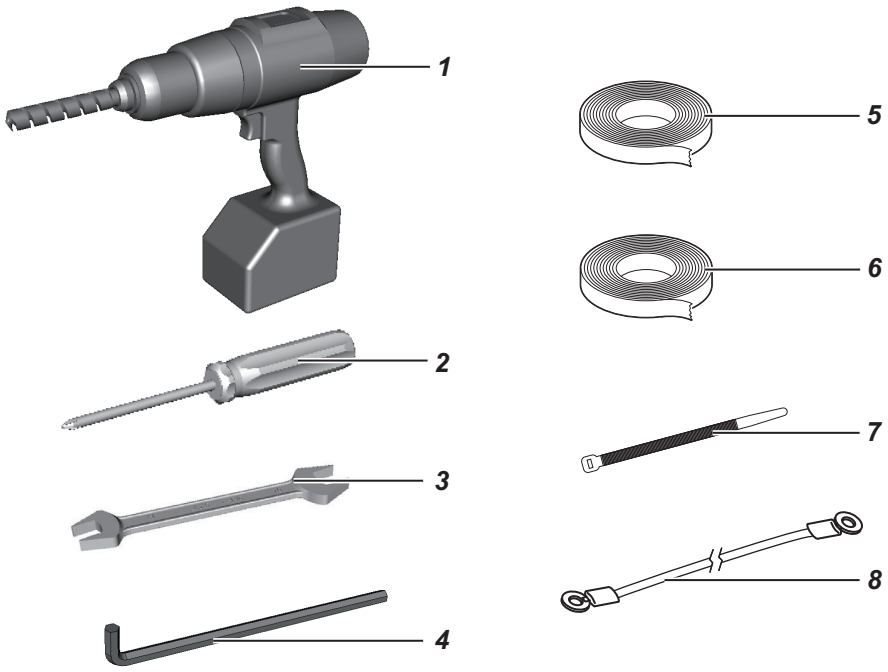

No.	Name	Remarks
1	Electrical drill	For making the mounting holes, drill bit: ϕ 15 mm
2	Phillips-head screw driver	#3, for securing the cable cover
3	Wrench	For M8 (Hex. size 13 mm) and M12 (Hex. size 19 mm)
4	Hex. L-wrench	For fastening the stud bolts (Hex. size 6 mm)
5	Self-vulcanizing tape	For waterproofing the junction of connectors
6	Vinyl tape*	
7	Cable tie	For securing the cables
8	Ground wire	IV-2sq

*: For cosmetic purposes, black color vinyl tape (cable color) is recommended.

1.4 Fastening the Radiator to the Radiator Bracket

1. Remove the radiator cap from the radiator bracket.

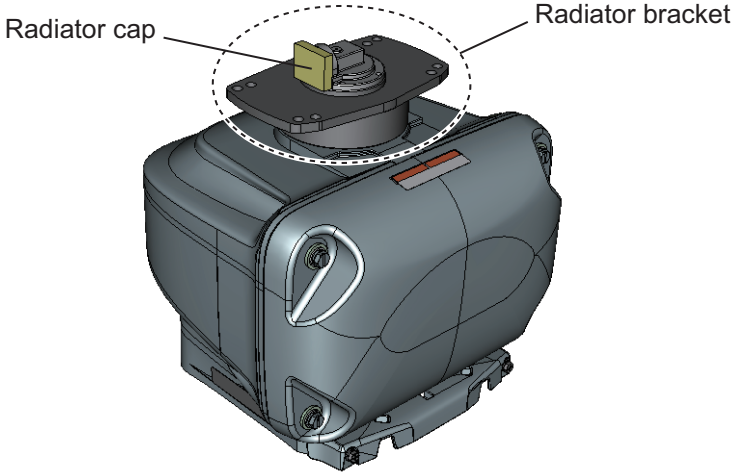

2. Apply marine sealant to the surface of the radiator bracket as shown in the figure below.

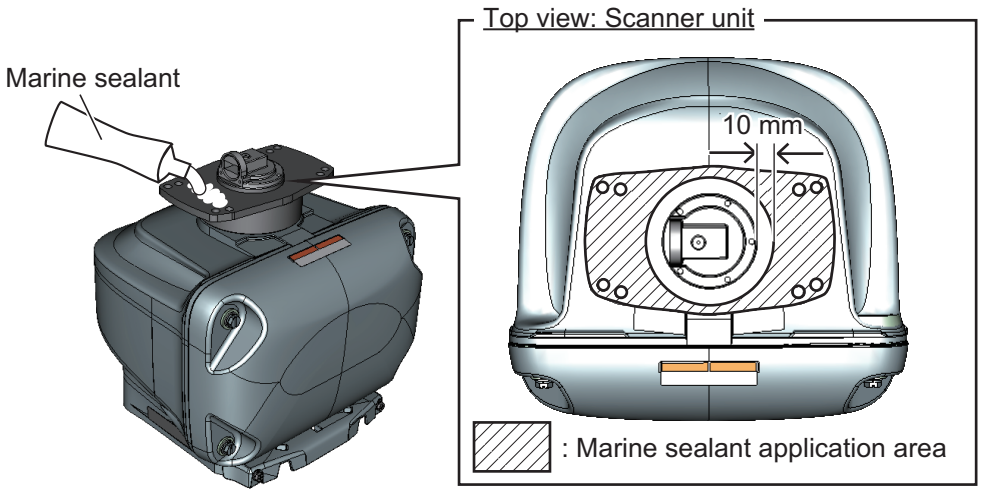

3. Set the O-ring to the radiator bracket.

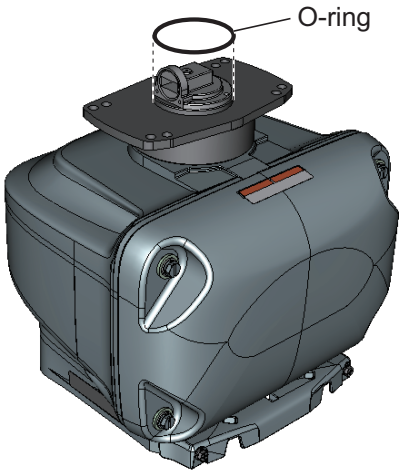

4. Apply marine sealant to the thread holes on the bottom of the radiator (4 locations).

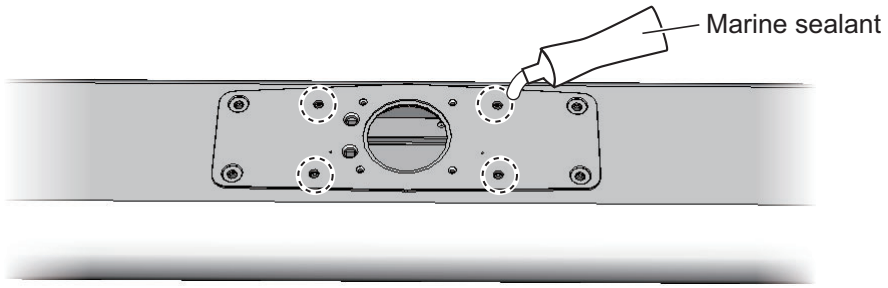

Bottom view: Radiator

5. Prepare four bolt assemblies; pass the spring washer (M8) and flat washer (M8) through the each hex bolt (M8×30) then apply marine sealant.

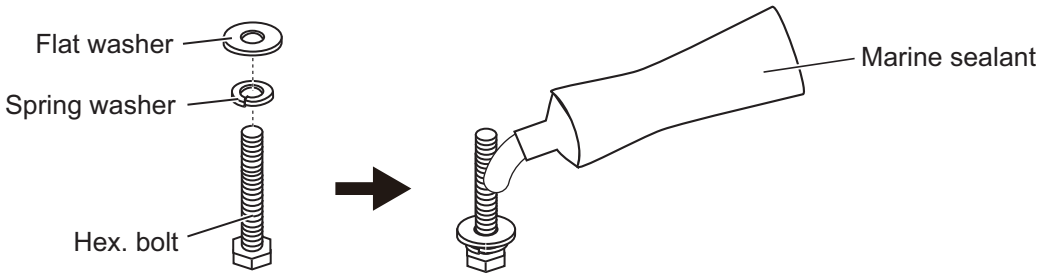

6. Fasten the radiator to the radiator bracket, using four bolt assemblies prepared at step 5.
   Note: Be sure to align the waveguide location between the radiator and radiator bracket before fastening bolt assemblies.

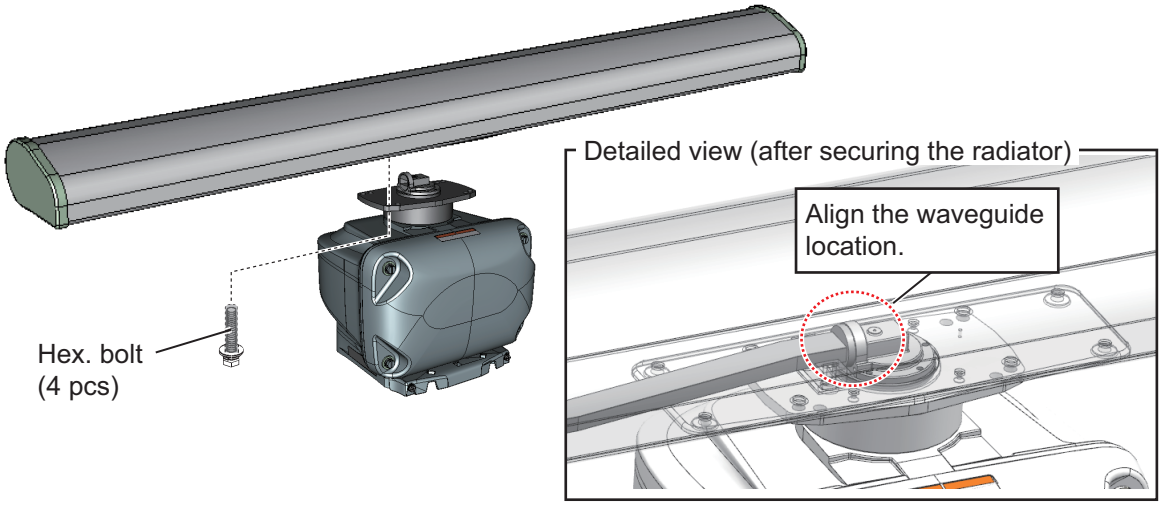

7. Apply marine sealant to the holes and bolts at the locations indicated with arrows in the figure below. Also apply marine sealant to the junction between the radiator and the radiator bracket.

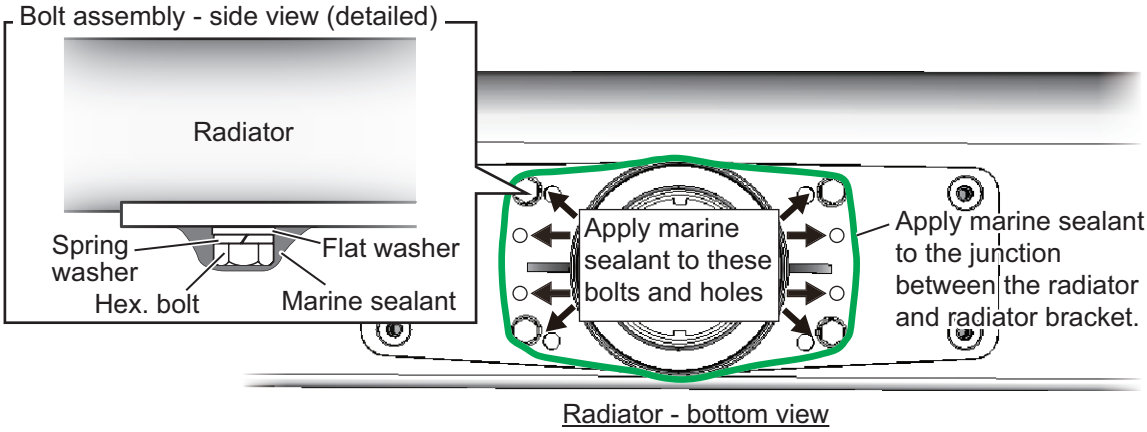

1.5 Mounting the Antenna Unit

The antenna unit can be mounted using the fixing holes on the outside (200 × 200 mm) or inside (140 × 150 mm) the antenna unit. Normally, use the outside fixing holes. When 140 × 150 mm fixing holes already exist on the mounting platform, use the inside fixing holes.

1. Set the supplied mounting template to the mounting location, then drill four fixing holes in the mounting location.
   Note: The holes must be parallel with the fore and aft line.

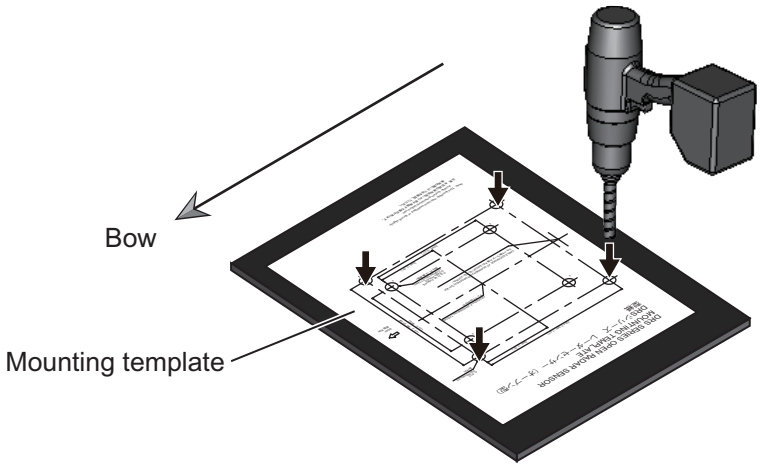

2. Attach four corrosion-proof rubber pads (supplied) to the mounting holes.

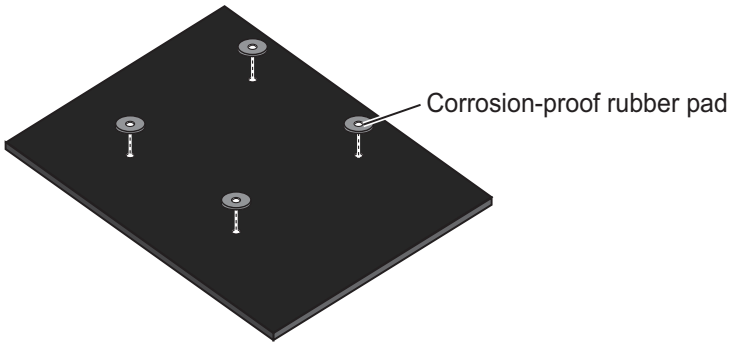

3. Apply marine sealant to the thread of the stud bolts (M12×70, 4 pcs).
   Note: Apply marine sealant to the part of thte bolt threads that are inside the bolt hole (see the figure at step 4).
4. Insert four stud bolts into the threaded holes in the antenna unit.
   The stud bolts must make contact with the bottom of the threaded holes.
   Note: Do NOT cover the vent hole at the bottom of the unit.

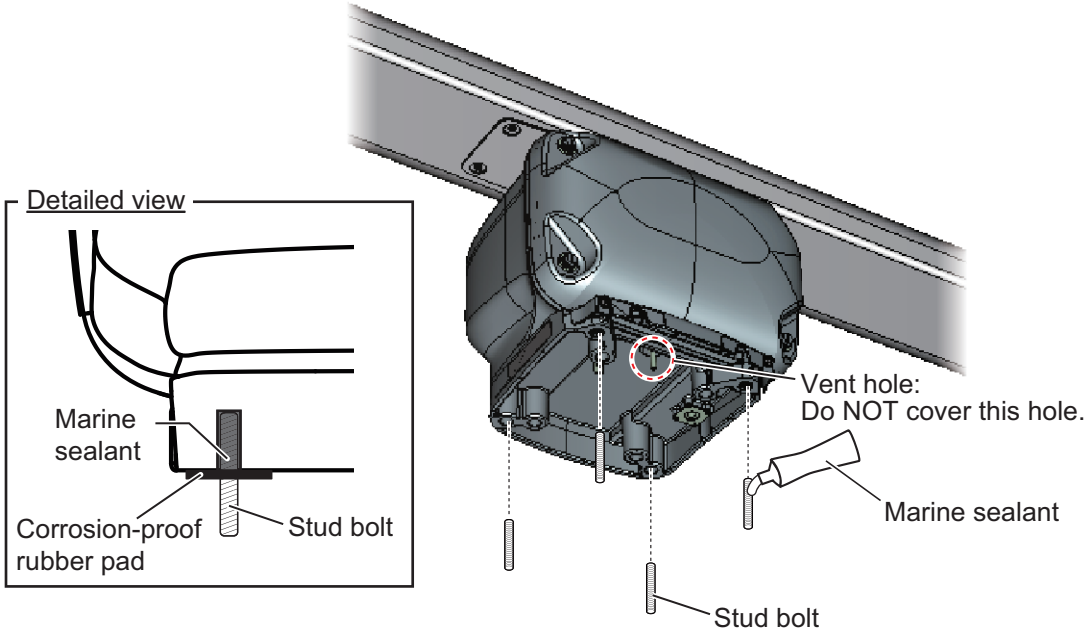

NOTICE

Do not fasten stud bolts tightly after the bolts contact with the bottom of the threaded holes.

If the bolts are fastened excessively, the chassis bottom may be damaged which can result in malfunction.
The projected bolt length after the bolts contact with the bottom of the threaded holes is approx. 46 mm. This data is for reference purpose only.

5. Hoist the antenna unit to the installation location, using two belt slings.
   Note: When you hoist the antenna unit. keep in mind the following points:
   - When you hoist the antenna unit, set two belt slings to the radiator bracket. Do not set the belt slings to the radiator, the radiator may get damaged.

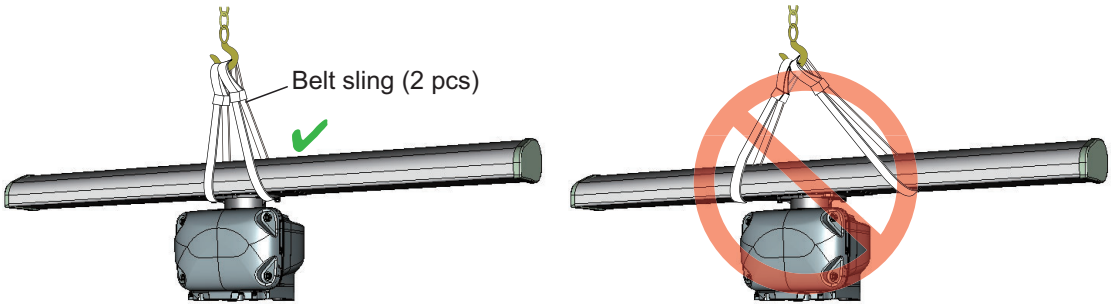

OK: Belt slings are set to the radiator bracket. WRONG: Belt slings are set to the radiator.

- Hoist the antenna unit slowly. If the antenna unit is hoisted too quickly, the bracket can be damaged.

6. Place the antenna unit on the mounting platform with the BOW mark on the unit aligned with the ship's bow.

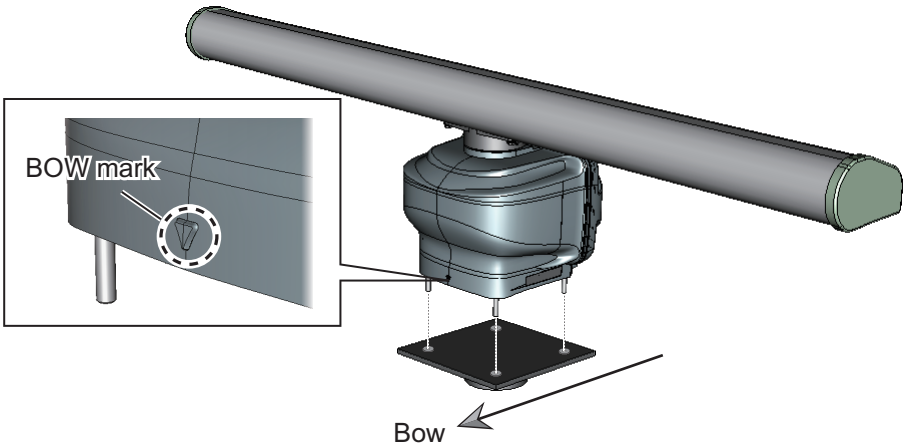

7. Secure the antenna unit, using the supplied flat washers (M12, 4 pcs), spring washers (M12, 4 pcs), and hex. nuts (M12, 8 pcs).

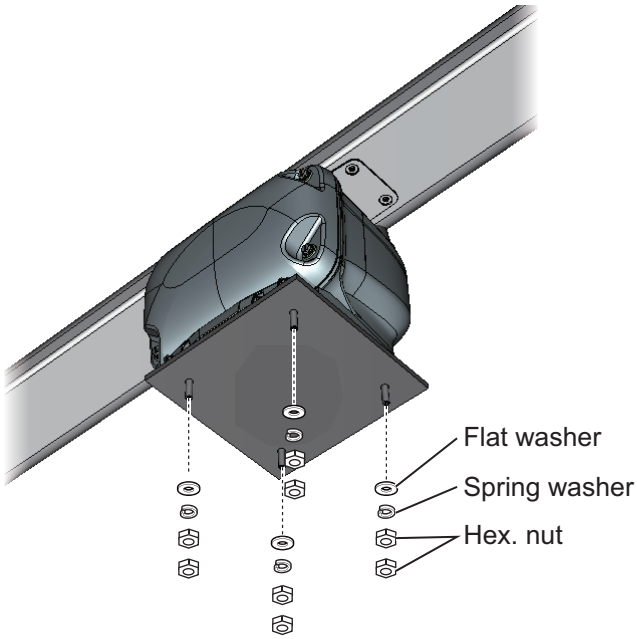

8. Apply marine sealant to the flat washers, spring washers, and hex. nuts.

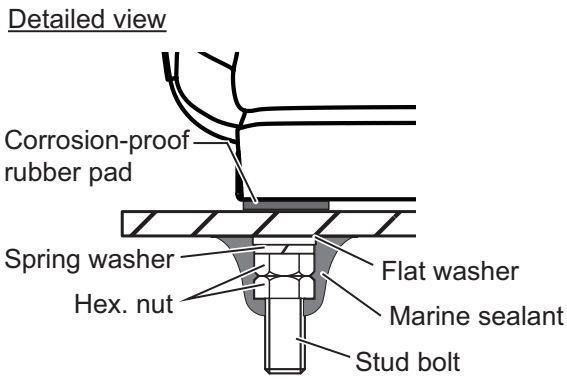

1.6 Wiring

Wiring considerations

- Turn the power at the switchboard off before beginning the wiring.
- The 5 A fuse in the fuse holder (supplied with the cable assembly) must be replaced with the supplied 10 A fuse when installing with 15 m, 20 m and 30 m cables. When installing with 10 m cables, the fuse to be used will be different according to the voltage of ship's main. Use the 15 A fuse for 12 VDC ship's main. Use the 10 A fuse for 24 VDC ship's main. Also, attach the supplied fuse rating label to the fuse holder. For details, see "How to Replace the Fuse" (C32-01604).
- The cable assembly and power/LAN cables have connector(s). Do NOT cut the cable assembly and power/LAN cables even if the cables are run through a radar mast.
- When you replace the DRS4A/6A/12A/25A with the DRS6A-NXT, the existing cable cannot be used. Use only the cable assembly supplied with this radar sensor.

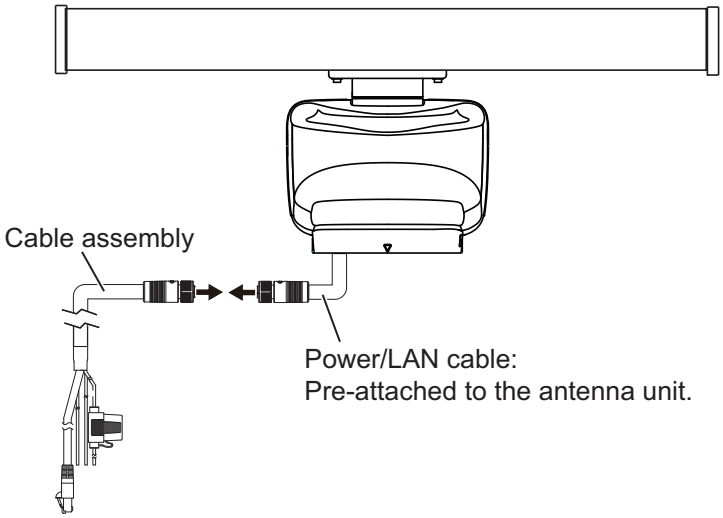

1. Unfasten two screws, circled in the following figure, to remove the cable cover.

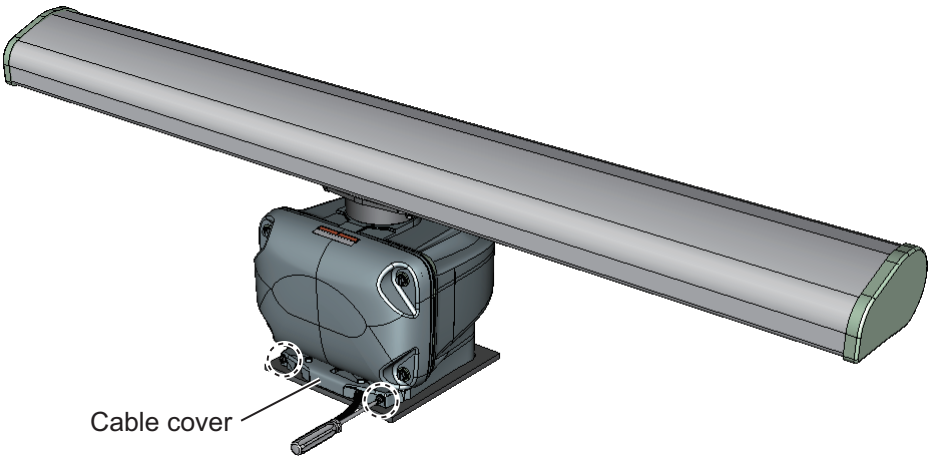

2. Connect the cable assembly (supplied) to the power/LAN cable that is pre-attached to the antenna unit.

3. Wrap the junction of the connectors with self-vulcanizing tape and vinyl tape (local supply) for waterproofing as follows:

1) Wrap the junction of the connectors with one layer of self-vulcanizing tape.

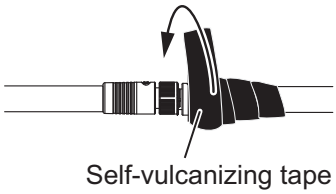

2) Change wrap direction and wrap one layer of the self-vulcanizing tape again.

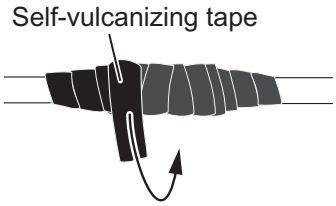

3) Wrap one layer of the vinyl tape over the self-vulcanizing tape.

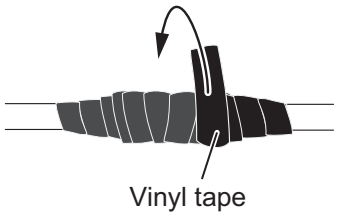

4) Change wrap direction and wrap one layer of the vinyl tape again.

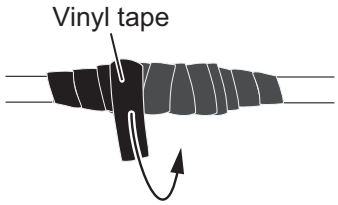

4. As shown in the figure below, secure the ground wire from the ship's ground (IV-2sq, local supply) and ground wire from the antenna unit, using the terminal screw (M4x10) that is pre-attached to the cable cover.

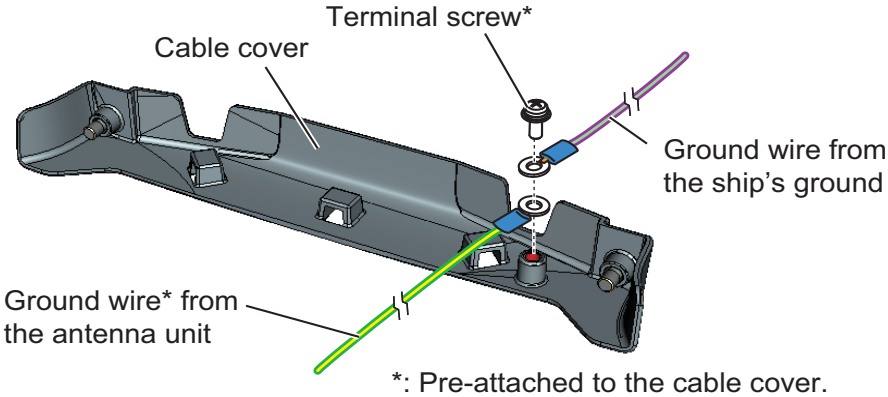

*: Pre-attached to the cable cover.

5. Apply marine sealant to the ground terminal after fastening the terminal screw.

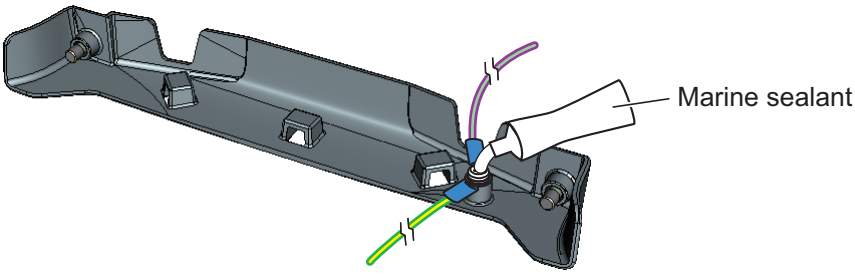

6. Secure the ground wire to the ship's ground.
   The figures shown below are examples for grounding.

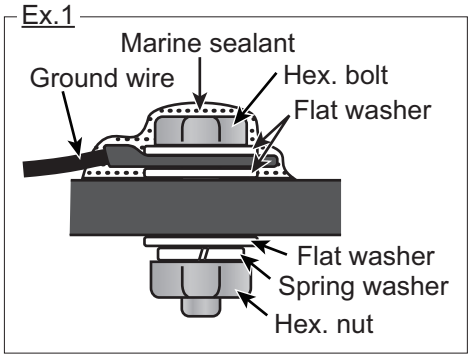

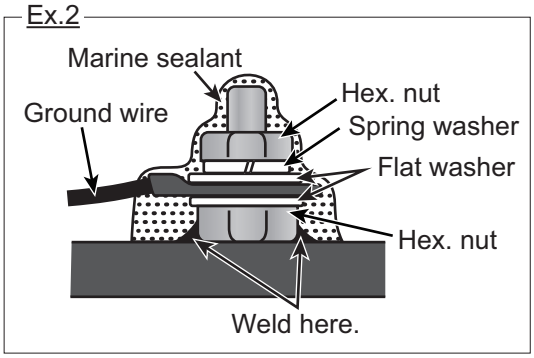

7. Secure the cable assembly to the cable cover with the cable ties (local supply) as shown in the figure below.

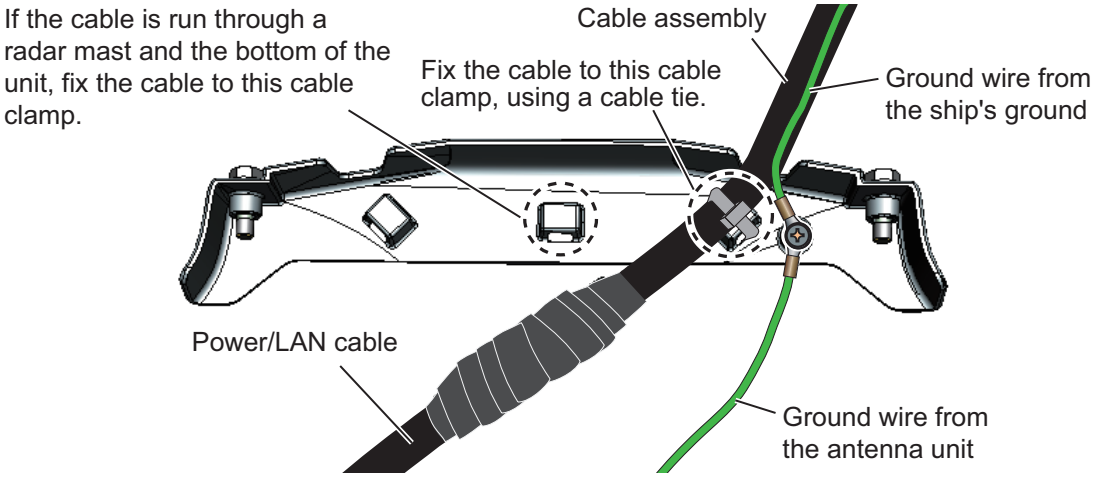

Cable cover - bottom view

8. Reattach the cable cover.
9. Connect the LAN connector of the cable assembly to a LAN port on the FURUNO Multi Function Display or Ethernet HUB.
   Note 1: Do not connect the LAN connector to on-board LAN.

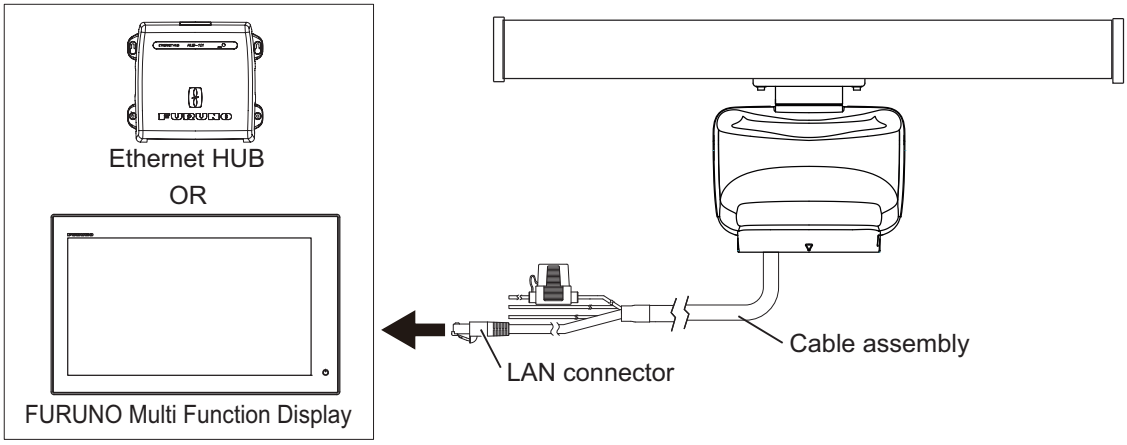

Note 2: When LAN cable extension is needed, use the optional LAN cable (MOD-Z072) and joint box (TL-CAT-012). After connection is completed, wrap the connector with vinyl tape to waterproof the LAN connector.

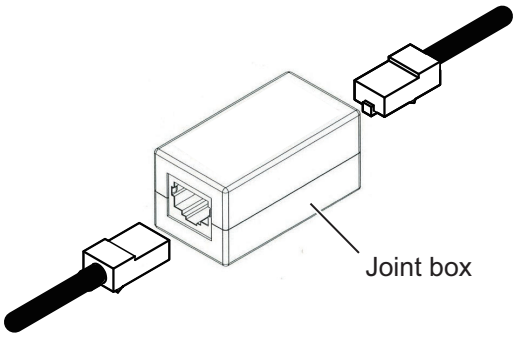

10. Connect the power wires to the ship's battery.
    - Red wire: Connect to the positive terminal. The red wire has the fuse holder.
    - Blue wire: Connect to the negative terminal.
    - Black wire: The black wire is a shielding wire for grounding.

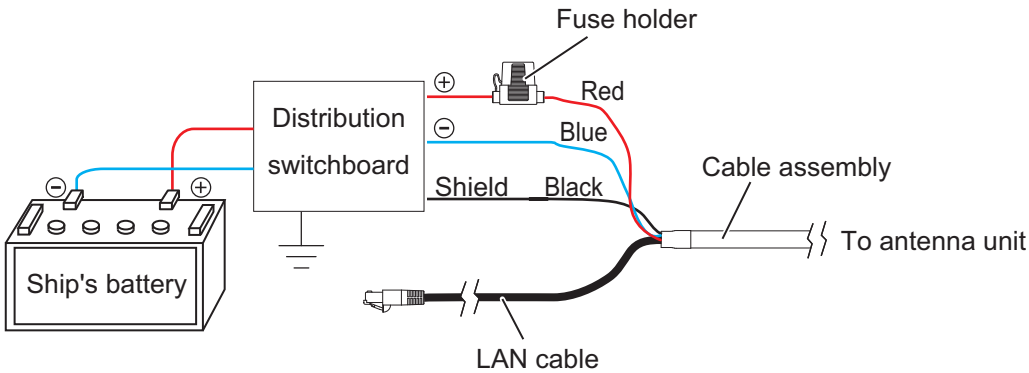

Note 1: The antenna unit has no power switch. Connect the antenna unit to a distribution switchboard with a switch for power control.

Note 2: The antenna unit cannot accept input voltage of more than 24 VDC.