FURUNO

Installation Manual
MARINE RADAR
Model FAR-2218(-BB)/2228(-BB/-NXT/-NXT-BB)/ FAR-2318/2328(-NXT)/FAR-2238S(-BB/-NXT/-NXT-BB)/ FAR-2338S(-NXT)/2328W/2338SW/2258(-BB)/2358

SAFETY INSTRUCTIONS i
SYSTEM CONFIGURATION iv
EQUIPMENT LISTS xiii

1. INSTALLATION 1-1
1.1 Antenna Unit (X-band Radar) 1-1
1.2 Antenna Unit (S-band Radar) 1-11
1.3 Monitor Unit 1-16
1.4 Control Unit 1-17
1.5 Power Supply Unit 1-24
1.6 Processor Unit 1-25
1.7 Transceiver Unit 1-26
1.8 Intelligent Hub (option) 1-27
1.9 Switching Hub (option) 1-28
1.10 Junction Box (option) 1-29

2. WIRING 2-1
2.1 Overview 2-1
2.2 Antenna Unit for X-band, TR-UP Radar 2-5
2.3 Antenna Unit for X-band, TR-DOWN Radar 2-20
2.4 Antenna Unit for S-band, TR-UP Radar 2-27
2.5 Antenna Unit for S-band, TR-DOWN Radar 2-41
2.6 Power Supply Unit 2-47
2.7 Transceiver Unit 2-54
2.8 Processor Unit 2-60
2.9 Monitor Unit 2-68
2.10 LAN Signal Converter 2-69
2.11 Junction Box (option) 2-72
2.12 Intelligent HUB (option) 2-73
2.13 VDR Connection 2-74

3. ADJUSTMENTS 3-1
3.1 How to Open the Radar Installation Menu 3-3
3.2 How to Align the Heading 3-4
3.3 How to Adjust the Sweep Timing 3-4
3.4 How to Suppress Main Bang 3-5
3.5 Other Settings 3-6
3.6 How to Control Charts 3-27

4. INPUT/OUTPUT DATA 4-1
4.1 Processor Unit 4-1
4.2 Sub Monitor 4-3

APPENDIX 1 JIS CABLE GUIDE AP-1
APPENDIX 2 DIGITAL INTERFACE AP-2

PACKING LISTS A-1
OUTLINE DRAWINGS D-1
INTERCONNECTION DIAGRAMS S-1

FURUNO ELECTRIC CO., LTD.

www.furuno.com

All brand and product names are trademarks, registered trademarks or service marks of their respective holders.

ECF
(Elemental Chlorine Free)
The paper used in this manual
is elemental chlorine free.

FURUNO ELECTRIC CO., LTD.

9-52 Ashihara-cho,
Nishinomiya, 662-8580, JAPAN

・FURUNO Authorized Distributor/Dealer

All rights reserved.

Printed in Japan

A : NOV. 2017
H10: DEC. 17, 2019

Pub. No. IME-36520-H10

(AKMU) FAR-2xx8 series

SAFETY INSTRUCTIONS

The installer must read the applicable safety instructions before attempting to operate or install the equipment.

DANGER	Indicates a potentially hazardous situation which, if not avoided, will result in death or serious injury.
WARNING	Indicates a potentially hazardous situation which, if not avoided, could result in death or serious injury.
CAUTION	Indicates a potentially hazardous situation which, if not avoided, can result in minor or moderate injury.

Warning, Caution Prohibitive Action Mandatory Action

DANGER

Wear a safety belt and hard hat when working on the antenna unit.

Serious injury or death can result if someone falls from the radar antenna mast.

WARNING

Do not open the equipment.

This equipment uses high voltage electricity which can shock, burn or cause serious injury. Only qualified personnel can work inside the equipment.

Construct a suitable service platform from which to install the antenna unit.

Serious injury or death can result if someone falls from the radar antenna mast.

Turn off the power at the mains switchboard before beginning the installation.

Fire, electrical shock or serious injury can result if the power is left on or is applied while the equipment is being installed.

Be sure that the power supply is compatible with the voltage rating of the equipment.

Connection of an incorrect power supply can cause fire or damage the equipment.

WARNING

Use only the specified power cable.

Fire or damage to the equipment can result if a different cable is used.

Do not install the units (other than the antenna unit) in a dusty environment, or one where the units may get wet from rain or water splash.

Dust or water in the units can result in fire, electrical shock, or damage to the equipment.

Attach protective earth securely to the ship's body.

The protective earth (grounding) is required for the AC power supply to prevent electrical shock.

CAUTION

For FAR-2x58 radars, turn the Processor Unit and the Power Supply Unit off before maintenance.

⚠ WARNING

Radio Frequency Radiation Hazard

The radar antenna emits electromagnetic radio frequency (RF) energy which can be harmful, particularly to your eyes. Never look directly into the antenna aperture from a close distance while the radar is in operation or expose yourself to the transmitting antenna at a close distance. Distances at which RF radiation level of 100, 50 and 10 W/m^2 are given in the table below.
If the antenna unit is installed at a close distance in front of the wheel house, your administration may require halt of transmission within a certain sector of antenna revolution. See the installation manual for how to manage blind sectors.

	Model	Transceiver	Magnetron	Antenna*	100 W/m^2	50 W/m^2	10 W/m^2
Magnetron radar	FAR-2218(-BB) FAR-2318	RTR-105 (12 kW)	FNE1201	XN12CF	0.6 m	1.4 m	4.4 m
				XN20CF	0.4 m	0.9 m	3.0 m
				XN24CF	0.3 m	0.6 m	2.5 m
	FAR-2228(-BB) FAR-2328	RTR-106 (25 kW)	MG5436	XN12CF	1.3 m	2.7 m	9.5 m
				XN20CF	1.0 m	1.7 m	6.8 m
				XN24CF	0.7 m	1.3 m	5.5 m
	FAR-2328W	RTR-108 (25 kW)		XN20CF	0.5 m	1.2 m	5.5 m
				XN24CF	0.3 m	0.9 m	4.0 m
	FAR-2238S(-BB) FAR-2338S	RTR-107 (30 kW)	MG5223F	SN24CF**	1.7 m	2.4 m	3.8 m
				SN30CF**	1.4 m	2.1 m	3.4 m
				SN36CF	N/A	0.5 m	4.6 m
	FAR-2338SW	RTR-109 (30 kW)		SN36CF	N/A	0.26 m	2.3 m
	FAR-2258/2358 FAR-2258(-BB)	RTR-122	9M31	XN24AF**	2.3 m	4.5 m	13.9 m
				XN30AF**	2.3 m	4.3 m	13.9 m
Solid state radar	FAR-2228-NXT(-BB) FAR-2328-NXT	RTR-123 (600 W)	———	XN12CF	0.3 m	0.7 m	3.3 m
				XN20CF	0.24 m	0.32 m	1.9 m
				XN24CF	0.19 m	0.29 m	1.6 m
	FAR-2238S-NXT(-BB) FAR-2338S-NXT	RTR-111 (250 W)		SN24CF**	N/A	N/A	N/A
				SN30CF**	N/A	N/A	N/A
				SN36CF	N/A	N/A	1.0 m

*: XN12CF: 4 ft, XN20CF: 6.5 ft, XN24CF/XN24AF: 8 ft, SN24CF: 8 ft, XN30AF/SN30CF: 10 ft, SN36CF: 12 ft

**: Unavailable on IMO-type radars

⚠ CAUTION

Observe the following compass safe distances to prevent deviation of a magnetic compass:

Unit	Standard compass	Steering compass
Antenna Unit (X-band, TR-UP, 12 kW, magnetron radar)	2.15 m	1.40 m
Antenna Unit (X-band, TR-UP, 25 kW, magnetron radar)	2.45 m	1.60 m
Antenna Unit (X-band, TR-UP, 50 kW, magnetron radar)	4.05 m	2.65 m
Antenna Unit (X-band, TR-UP, solid state radar)	1.15 m	0.70 m
Antenna Unit (S-band, TR-UP, magnetron radar)	3.05 m	1.90 m
Antenna Unit (S-band, TR-UP, solid state radar)	1.90 m	1.20 m
Antenna Unit (X-band, TR-DOWN)	1.90 m	1.20 m
Antenna Unit (S-band, TR-DOWN)	1.55 m	0.95 m

Unit	Standard compass	Steering compass
Processor Unit (RPU-025)	2.85 m	1.80 m
Power Supply Unit (PSU-019)	1.30 m	0.80 m
Monitor Unit (MU-190)	1.65 m	1.05 m
Monitor Unit (MU-231)	0.85 m	0.55 m
Monitor Unit (MU-270W)	0.90 m	0.55 m
Control Unit (RCU-014)	0.50 m	0.30 m
Control Unit (RCU-015)	0.95 m	0.60 m
Control Unit (RCU-016)	0.95 m	0.60 m
Control Unit (RCU-031)	0.30 m	0.30 m
Transceiver Unit (RTR-108)	2.00 m	1.25 m
Transceiver Unit (RTR-109)	4.50 m	2.90 m
Intelligent HUB (HUB-3000)	1.20 m	0.75 m
Switching HUB (HUB-100)	1.00 m	0.60 m
Junction Box (RJB-001)	1.10 m	0.70 m

Note: For more information, please refer to IMO SN/Circ.271 “Guidelines for the installation of shipborne radar equipment.”

SYSTEM CONFIGURATION

NOTICE

IMO-type radar(s) must be interconnected to the following type approved sensors.
For other radar types, it is recommended to connect the following type approved sensors:
- **EPFS meeting the requirements of the IMO resolution MSC.112(73).**
- **Gyrocompass (or equivalent devices) meeting the requirements of the IMO resolution A.424(XI).**
- **SDME meeting the requirements of IMO resolution MSC.96(72).**

The radar may be interconnected via HUB-3000 to other FURUNO processing units having approved LAN ports.

Standard connection

Basic configuration is shown with solid line. For footnotes, see "Notes" on page ix.

X-band (TR-UP), 12 kW/25 kW/600 W

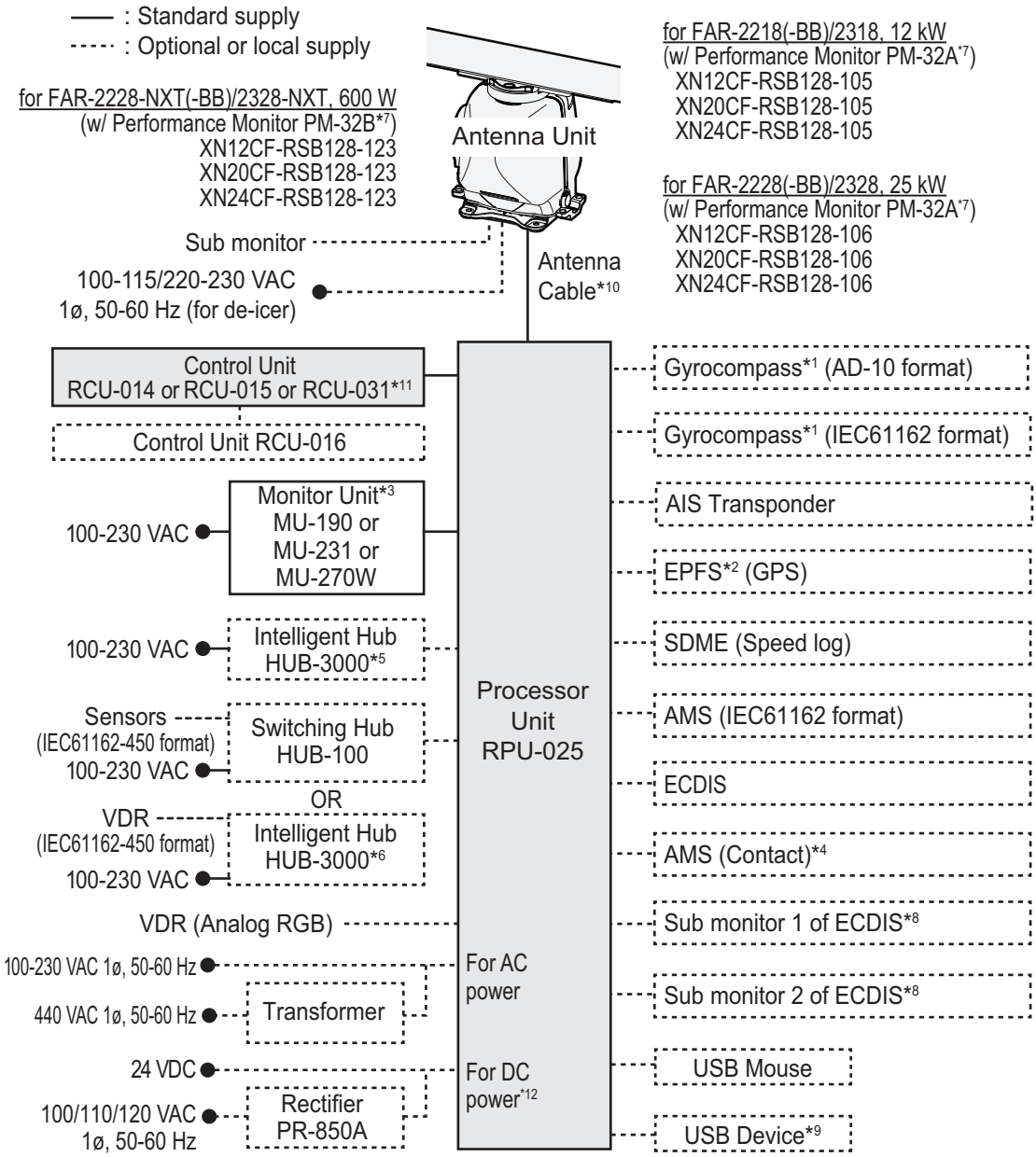

X-band (TR-UP), 50 kW

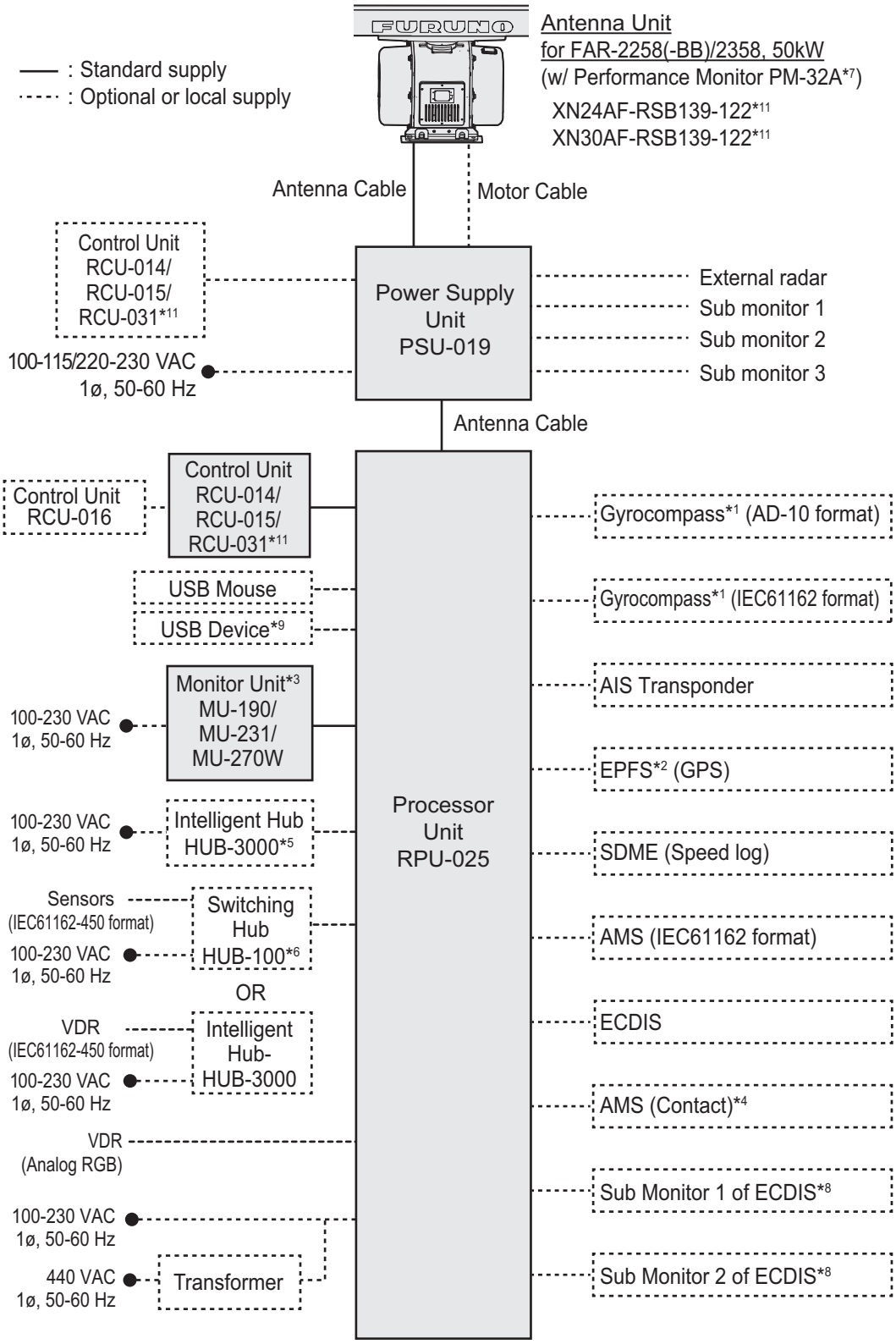

S-band (TR-UP)

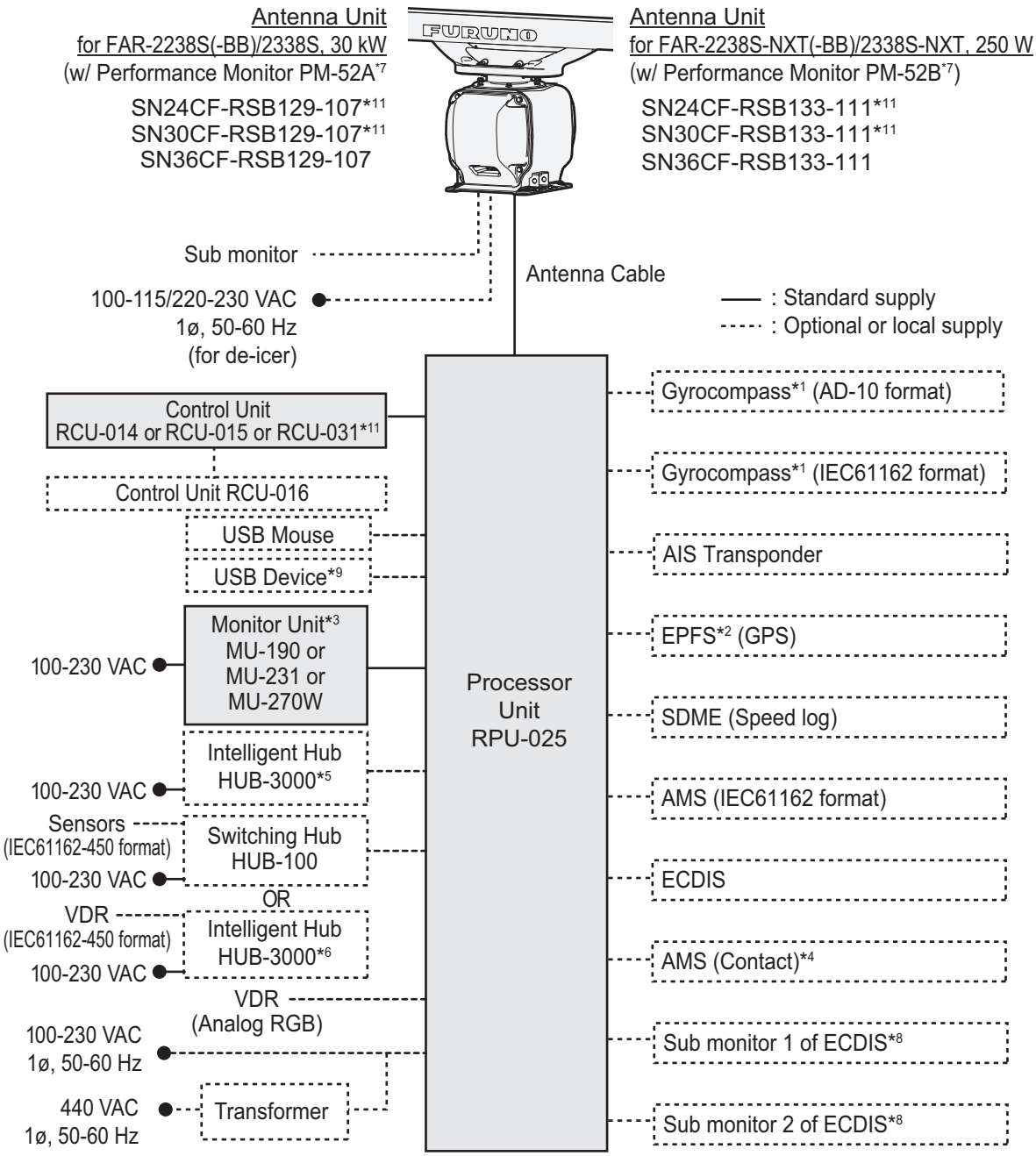
Antenna Unit
for FAR-2238S(-BB)/2338S, 30 kW
(w/ Performance Monitor PM-52A*7
SN24CF-RSB129-107*11
SN30CF-RSB129-107*11
SN36CF-RSB129-107
Antenna Unit
for FAR-2238S-NXT(-BB)/2338S-NXT, 250 W
(w/ Performance Monitor PM-52B*7)
SN24CF-RSB133-111*11
SN30CF-RSB133-111*11
SN36CF-RSB133-111
Sub monitor
100-115/220-230 VAC
1ø, 50-60 Hz
(for de-icer)
Antenna Cable
: Standard supply
: Optional or local supply
Control Unit
RCU-014 or RCU-015 or RCU-031*11
Control Unit RCU-016
USB Mouse
USB Device*9
Monitor Unit*3
MU-190 or
MU-231 or
MU-270W
100-230 VAC
Intelligent Hub
HUB-3000*5
100-230 VAC
Sensors
(IEC61162-450 format)
Switching Hub
HUB-100
100-230 VAC
OR
VDR
(IEC61162-450 format)
Intelligent Hub
HUB-3000*6
100-230 VAC
VDR
(Analog RGB)
100-230 VAC
1ø, 50-60 Hz
440 VAC
1ø, 50-60 Hz
Transformer
Processor
Unit
RPU-025
Gyrocompass*1 (AD-10 format)
Gyrocompass*1 (IEC61162 format)
AIS Transponder
EPFS*2 (GPS)
SDME (Speed log)
AMS (IEC61162 format)
ECDIS
AMS (Contact)*4
Sub monitor 1 of ECDIS*8
Sub monitor 2 of ECDIS*8

X-band (TR-DOWN)

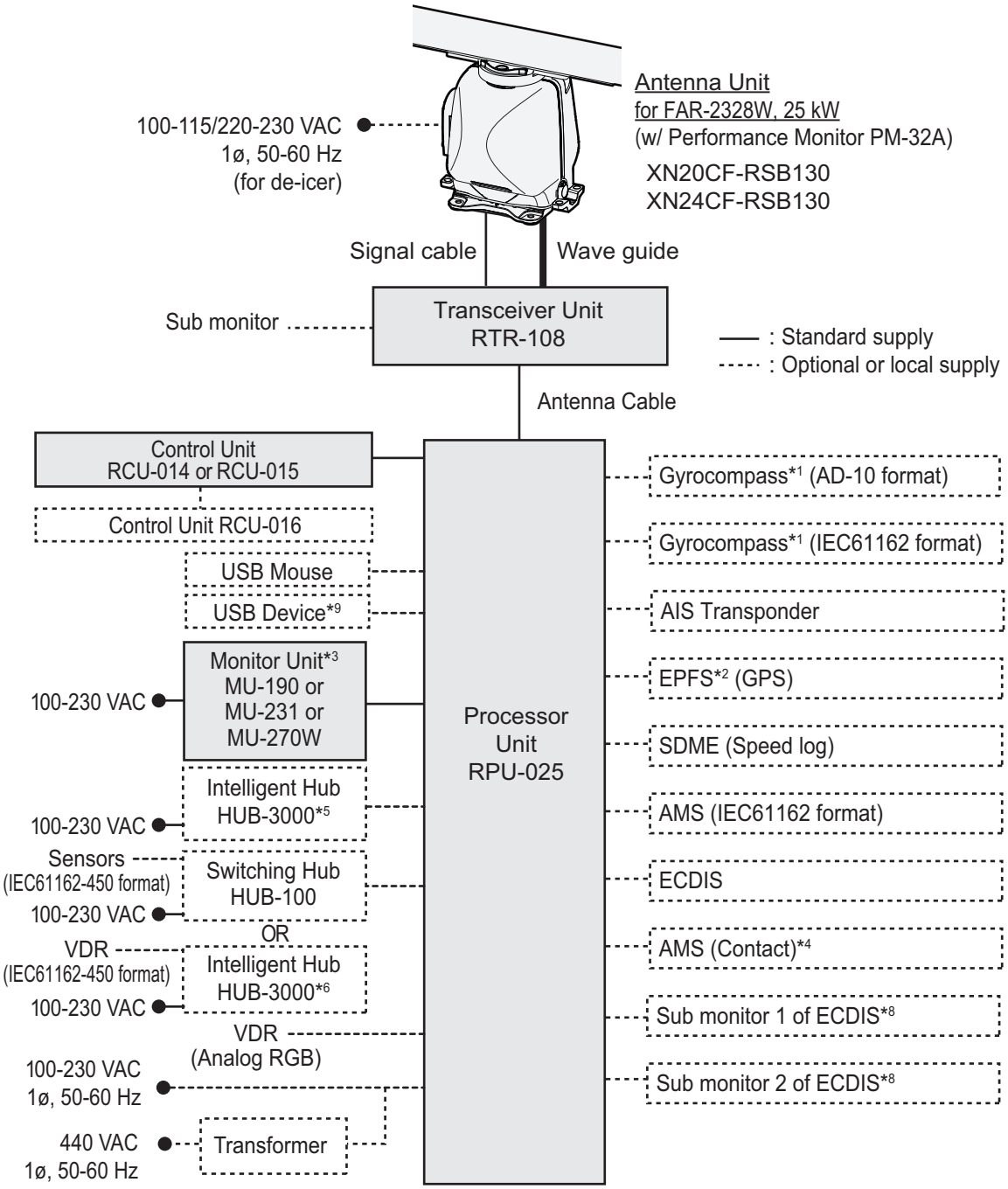

S-band (TR-DOWN)

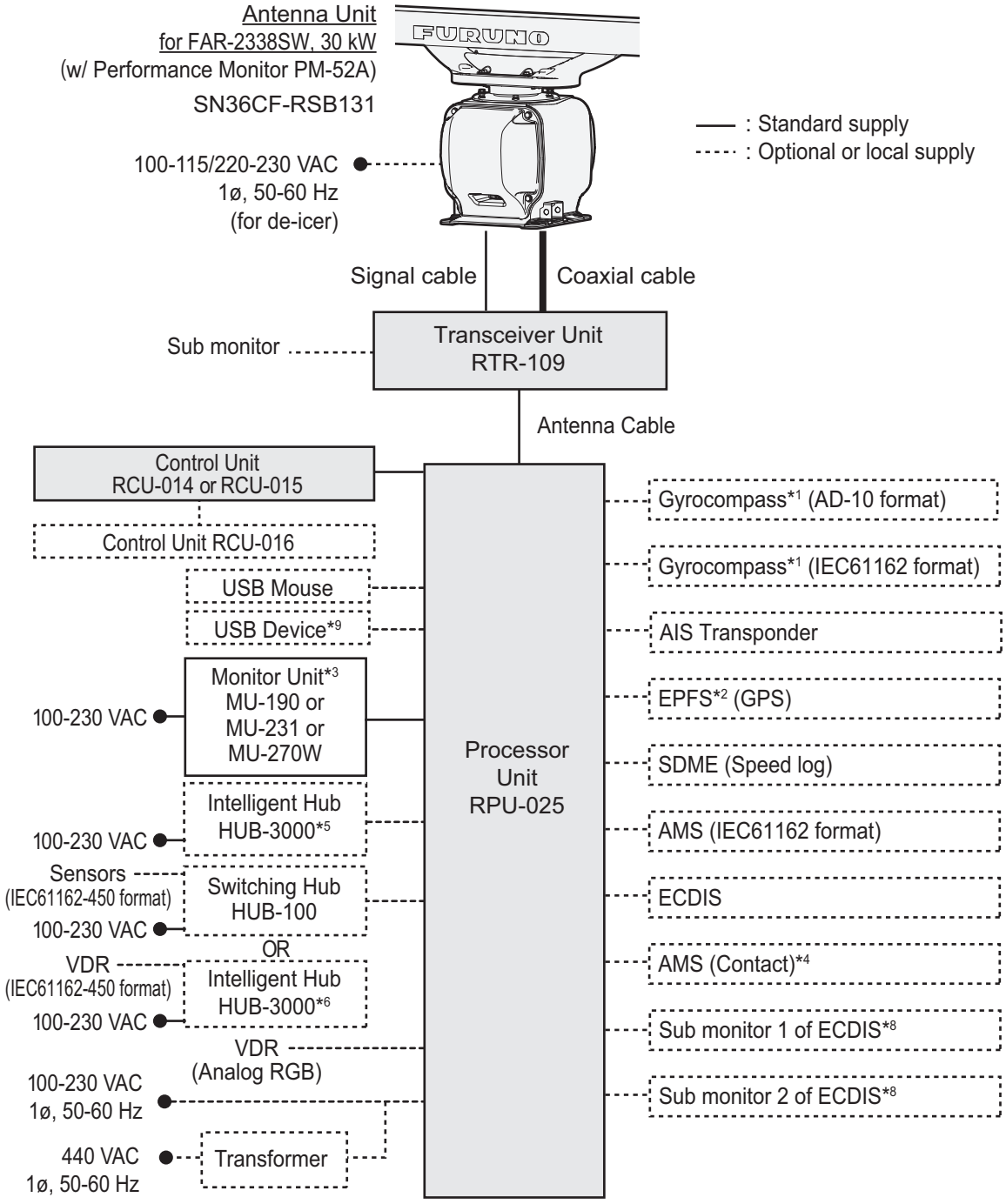

Category of units

Antenna Unit: Exposed to weather
Other units: Protected from the weather

Notes

1) The gyrocompass must be type approved for compliance with IMO resolution A.424(XI) (and/or resolution A.821(19) for installation on HSC). The gyrocompass must also have an update rate that is adequate for the ship's rate of turn. The update rate must be better than 40 Hz (HSC) or 20 Hz (conventional vessel).
2) The EPFS must be type approved for compliance with IMO resolution MSC.112(73).
3) These monitors have been approved by the IMO, MU-190 for CAT 2 and CAT 2H, MU-231/MU-270W for CAT 1 and CAT 1H. If a different monitor is to be used on IMO vessels, its effective diameter must meet the Category requirements:
   - CAT 1 and CAT 1H: effective diameter 320 mm or higher
   - CAT 2 and CAT 2H: effective diameter 250 mm or higher

   For installation, operation and viewing distance of other monitor, see its manuals.
   For BB type, a monitor unit is prepared by user.
4) Characteristics of contact output for Alarm:
   - (Load current) 250 mA
   - (Polarity) Normally Open: 2 ports, Normally Close: 2 ports
   - Serial I/O for alarm is also possible, which complies with IEC 61162-1.
5) For configurations with 3 or more radars/ECDIS (FMD-3100/FMD-3200/FMD-3300) connected, connect via the HUB-3000. For 2 radars, HUB-100 can be used. Connection to a FMD (ECDIS) is not available for C-type radars.
6) For configurations with a VDR connected, connect via the HUB-3000. Connection to a VDR is not available for C-type radars.
7) Some antenna configurations do not have an in-built Performance Monitor. This type of antenna is not usable for IMO-type radars.
8) For connecting non-FURUNO ECDIS only. For connection of radars or plotters, the connection must be done at the radar antenna (or the transceiver unit) via the sub monitor connector.
9) Available on C-type and A/B/W-type radars with Radar Plotter functionality
10) Junction boxes are required for antenna cable length greater than 100 m (only for TR-UP radar of X-band). Max. cable length is 400 m.
11) Unavailable on IMO-type radars.
12) Unavailable with FAR-2228-NXT, FAR-2228-NXT-BB or FAR-2328-NXT.

Interswitch connection

When multiple radars are used, connect units as shown in the figure below. This configuration lets each radar function as a standalone radar in case of HUB malfunction.

Solid lines indicate standard supply equipment. Dashed lines indicate optional or local supply equipment.

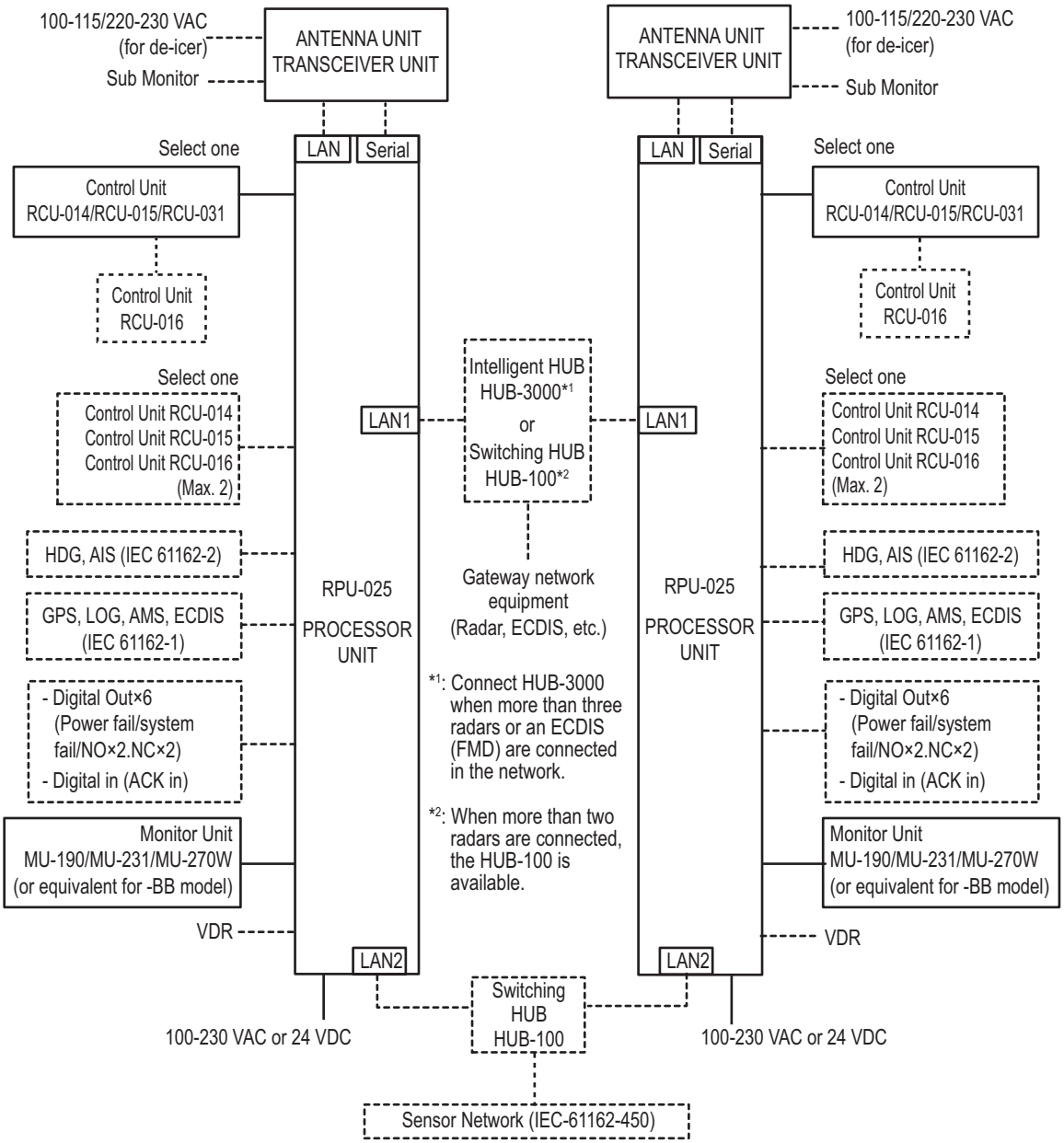

Radar Component Combinations

RADAR MODEL	TRANSCEIVER UNIT	ANTENNA UNIT	Remarks
FAR-2218(-BB), FAR-2318	RTR-105	XN12CF-RSB-128 XN20CF-RSB-128 XN24CF-RSB-128	
FAR-2228(-BB), FAR-2328	RTR-106		
FAR-2228-NXT(-BB), FAR-2328-NXT	RTR-123		
FAR-2258(-BB), FAR-2358	RTR-122	XN24AF-RSB139 XN30AF-RSB139	NOT available on IMO-type radars
FAR-2328W	RTR-108	XN20CF-RSB-130 XN24CF-RSB-130	
FAR-2238S(-BB), FAR-2338S	RTR-107	SN24CF-RSB-129 SN30CF-RSB-129 SN36CF-RSB-129	SN24CF/SN30CF are NOT available on IMO-type radars.
FAR-2338SW	RTR-109	SN36CF-RSB-131	
FAR-2238S-NXT(-BB), FAR-2338S-NXT	RTR-111	SN24CF-RSB-133 SN30CF-RSB-133 SN36CF-RSB-133	SN24CF/SN30CF are NOT available on IMO-type radars.

Radar Type and Function Availability

This radar series is available in six specification types to meet the requirements of Authorities, and function availability depends on specification type.

- IMO: IMO compliant
- A: Near-IMO specifications
- B: Non-Japanese fishing specifications
- C: Japanese fishing specifications
- R: Russian specifications
- W: Washington Ferry specifications

Also, the software version has two main versions as shown below. Radar type availability depends on the software version (Available: ✓, Not available: –).

Software version	Available type					
	IMO	A	B	C	R	W
01.**	✓	✓	✓	–	✓	✓
50.**	✓	–	–	✓	–	–

Note: IMO-type radars with software version 01.** are different from those with software version 50.**.

The table below shows those functions which are limited to a specific radar type (Available: ✓, Not available: –). The menus which are not mentioned in the table below are available for all types. This manual provides descriptions for all functions in this radar series.

Specification type and function availability in [RADAR INSTALLATION] menu

Function (Menu items)		Type						Remarks for software ver.
		IMO	A	B	C	R	W	
SCANNER	DUAL RADAR SETTINGS	–	–	✓	–	–	–	For 01.xx ver.
INSTALLA-TION	RANGE UNIT	–	–	✓	✓	–	✓	
	ICE MODE SETTINGS	✓	✓	✓	–	✓	✓	For 01.xx ver.
TT PRESET	TT NO.	–	–	–	✓	–	–	For **50**.xx ver.
ALERT I/F SETTINGS	ALERT OUT 1/2/3/4 • DESTINATION LEAVE • INTRUSION BAN • WATER TEMP ALERT • CURRENT RIP • DEPTH ALERT • TARGET ALARM	–	–	–	✓	–	–	For **50**.xx ver.
	AIS CAPACITY FULL(A)	–	–	–	–	✓	–	For 01.xx ver.
	AIS CAPACITY FULL(C)	–	–	–	–	✓	–	For 01.xx ver.
INPUT PORT SETTINGS	EPFS • EPFS1 INPUT DTM SEL. • EPFS2 INPUT DTM SEL.	–	–	–	✓	–	–	For **50**.xx ver.
NETWORK SETTINGS	VDR SETTINGS	✓	✓	✓	–	✓	✓	
OTHER SETTINGS	OVERLAY1/2	✓	✓	✓	–	✓	✓	
	RP UPDATE	–	✓*	✓*	✓	–	✓*	
	SHUTTLE FERRY SWITCH	✓	✓	✓	–	✓	✓	

*: For A/B-type radars with Radar Plotter functionality

EQUIPMENT LISTS

Standard supply

For X-band TR-UP magnetron radar: FAR-2218(-BB)/2228(-BB)/2318/2328

Name	Type	Code No.	Qty	Remarks	
Antenna Unit	XN12CF-RSB128-105	-	1	4 ft, 12 kW	w/ PM-32A*
	XN12CF-RSB128-106	-		4 ft, 25 kW	
	XN20CF-RSB128-105	-		6.5 ft, 12 kW	
	XN20CF-RSB128-106	-		6.5 ft, 25 kW	
	XN24CF-RSB128-105	-		8 ft, 12 kW	
	XN24CF-RSB128-106	-		8 ft, 25 kW	
Processor Unit	RPU-025	-	1	For AC power/DC power	
Monitor Unit	MU-190	-	1	For FAR-22x8	
	MU-231	-		For FAR-23x8	
	MU-270W	-			
Control Unit	RCU-014	-	1	Standard type	
	RCU-015	-		Trackball type	
	RCU-031	-		For BB type of C-type radars	
Installation Materials	CP03-35201	001-249-860	1	For radiator	
	CP03-35401	001-254-980	1	For RSB (no de-icer)	
	CP03-35403	001-270-070		For RSB (w/de-icer)	
	CP03-35500 [15M]	000-024-096	1	For Antenna Unit, 15 m	
	CP03-35510 [30M]	000-024-097		For Antenna Unit, 30 m	
	CP03-35520 [40M]	000-024-098		For Antenna Unit, 40 m	
	CP03-35530 [50M]	000-024-099		For Antenna Unit, 50 m	
	CP03-37801	001-489-150	1	For RPU-025, AC power	
	CP03-37803	001-558-550	1	For RPU-025, DC power	
	CP03-25604	001-418-420	1	For RCU-014/015	
Accessories	FP03-09880	001-576-470	1	For RCU-014	
	FP03-09860	001-419-140	1	For RCU-015	
Spare Parts	SP03-17641	001-249-740	1	Fuse for Processor Unit of AC power • FGBO-A 250V 7A PBF, 2 pcs. (000-178-084-10)	
	SP03-17681	001-558-560	1	Fuse for Processor Unit of DC power • FGBO 125V 20A, 2 pcs. (000-155-780-10)	
	SP03-19701	001-531-630	1	Fuse for Antenna Unit w/de-icer • FGBO-A 250V 3A PBF, 4 pcs. (000-155-841-10)	
Hoist X-Band Antenna Instructions	C32-01302-*	000-178-042-**	1		

*: Some antenna configurations do not have an in-built Performance Monitor. The Performance Monitor PM-32A is mandatory for IMO-type radars

For X-band TR-UP magnetron radar: FAR-2258(-BB)/2358

Name	Type	Code No.	Qty	Remarks	
Antenna Unit	XN24AF-RSB139-122	-	1	8 ft, 50 kW	w/PM-32A*, Unavailable on IMO-type radars.
	XN30AF-RSB139-122	-		10 ft, 50 kW	
Processor Unit	RPU-025	-	1		
Power Supply Unit	PSU-019	-	1		
Monitor Unit	MU-190	-	1	For FAR-2258	
	MU-231	-		For FAR-2358	
	MU-270W	-			
Control Unit	RCU-014	-	1	Standard type	
	RCU-015	-		Trackball type	
	RCU-031	-		Compact type	
Installation Materials	CP03-19101	001-510-420	1	For radiator	
	CP03-38700	000-036-619	1	For RSB	
	CP03-33300 [15M]	000-017-041	1	For Antenna Unit, 15 m	
	CP03-33310 [20M]	000-017-042		For Antenna Unit, 20 m	
	CP03-33320 [30M]	000-017-043		For Antenna Unit, 30 m	
	CP03-33340 [50M]	000-036-639		For Antenna Unit, 50 m	
	CP03-33350 [70M]	000-036-640		For Antenna Unit, 70 m	
	CP03-38900 [5M]	000-036-633	1	Cable for RPU-025, 5 m	
	CP03-38910 [10M]	000-036-634	1	Cable for RPU-025, 10 m	
	CP03-38920 [15M]	000-036-635	1	Cable for RPU-025, 15 m	
	CP03-38930 [30M]	000-036-636	1	Cable for RPU-025, 30 m	
	CP03-38940 [40M]	000-036-637	1	Cable for RPU-025, 40 m	
	CP03-38950 [50M]	000-036-638	1	Cable for RPU-025, 50 m	
	CP03-38960 [1.5M]	000-036-786	1	Cable for RPU-025, 1.5 m	
	CP03-37801	001-489-150	1	For RPU-025	
	CP03-25604	001-418-420	1	For RCU-014/015	
	CP10-09600	000-036-274	1	For RCU-031	
	CP03-38801	001-547-980	1	For PSU-019	
Accessories	FP03-09880	001-576-470	1	For RCU-014	
	FP03-09860	001-419-140	1	For RCU-015	
Spare Parts	SP03-17641	001-249-740	1	Fuse for Processor Unit • FGBO-A 250V 7A PBF, 2 pcs. (000-178-084-10)	
	SP03-15501	008-572-730	1	For PSU, 100 VAC • FGBO-A 250V 5A PBF, 2 pcs. (000-155-840-10)	
	SP03-15502	008-572-740	1	For PSU, 220 VAC • FGBO-A 250V 3A PBF, 2 pcs. (000-155-841-10)	
Antenna Hoist Instructions	C32-01805-*	000-196-329-**	1		

*: Some antenna configurations do not have an in-built Performance Monitor.

For X-band TR-UP solid state radar: FAR-2228-NXT(-BB)/2328-NXT

Name	Type	Code No.	Qty	Remarks	
Antenna Unit	XN12CF-RSB128-123	-	1	4 ft, 600 W	w/ PM-32B*
	XN20CF-RSB128-123	-		6.5 ft, 600 W	
	XN24CF-RSB128-123	-		8 ft, 600 W	
Processor Unit	RPU-025	-	1		
Monitor Unit	MU-190	-	1	For FAR-22x8-NXT(-BB)	
	MU-231	-		For FAR-23x8-NXT	
	MU-270W	-			
Control Unit	RCU-014	-	1	Standard type	
	RCU-015	-		Trackball type	
Installation Materials	CP03-35201	001-249-860	1	For radiator	
	CP03-35401	001-254-980	1	For RSB (no de-icer)	
	CP03-35403	001-270-070		For RSB (w/de-icer)	
	CP03-35500 [15M]	000-024-096	1	For antenna unit, 15 m	
	CP03-35510 [30M]	000-024-097		For antenna unit, 30 m	
	CP03-35520 [40M]	000-024-098		For antenna unit, 40 m	
	CP03-35530 [50M]	000-024-099		For antenna unit, 50 m	
	CP03-37801	001-489-150	1	For RPU-025	
	CP03-25604	008-539-850	1	For RCU-014/015	
Accessories	FP03-09880	001-576-470	1	For RCU-014	
	FP03-09860	008-535-690	1	For RCU-015	
Spare Parts	SP03-17641	001-249-740	1	Fuse for processor unit • FGBO-A 250V 7A PBF, 2 pcs. (000-178-084-10)	
	SP03-19701	001-531-630	1	Fuse for antenna unit w/de-icer • FGBO-A 250V 3A PBF, 4 pcs. (000-155-841-10)	
Hoist X-Band Antenna Instructions	C32-01302-*	000-178-042-**	1		

*: Some antenna configurations do not have an in-built Performance Monitor. The Performance Monitor PM-32B is mandatory for IMO-type radars

For S-band TR-UP magnetron radar: FAR-2238S(-BB)/2338S

Name	Type	Code No.	Qty	Remarks	
Antenna Unit	SN24CF-RSB129-107	-	1	8 ft, 30 kW	• Unavailable on IMO-type radars. • w/PM-52A*
	SN30CF-RSB129-107	-		10 ft, 30 kW	
	SN36CF-RSB129-107	-		12 ft, 30 kW	w/ PM-52A*
Processor Unit	RPU-025	-	1		
Monitor Unit	MU-190	-	1	For FAR-2238S	
	MU-231	-		For FAR-2338S	
	MU-270W	-			
Control Unit	RCU-014	-	1	Standard type	
	RCU-015	-		Trackball type	
	RCU-031	-		For BB type of C-type radars	
Installation Materials	CP03-35202	001-249-880	1	For radiator	
	CP03-35402	001-255-430	1	For RSB (no de-icer)	
	CP03-35404	001-270-080	1	For RSB (w/de-icer)	
	CP03-35500 [15M]	000-024-096	1	For Antenna Unit, 15 m	
	CP03-35510 [30M]	000-024-097		For Antenna Unit, 30 m	
	CP03-35520 [40M]	000-024-098		For Antenna Unit, 40 m	
	CP03-35530 [50M]	000-024-099		For Antenna Unit, 50 m	
	CP03-37801	001-489-150	1	For RPU-025	
	CP03-25604	001-418-420	1	For RCU-014/015	
Accessories	FP03-09880	001-576-470	1	For RCU-014	
	FP03-09860	001-419-140	1	For RCU-015	
Spare Parts	SP03-17641	001-249-740	1	Fuse for Processor Unit of 24 rpm radar • FGBO-A 250V 7A PBF, 2 pcs. (000-178-084-10)	
	SP03-17651	001-249-750	1	Fuse for Processor Unit of 42 rpm radar • FGBO-A 250V 3A PBF, 2 pcs. (000-155-841-10) • FGBO-A 250V 7A PBF, 2 pcs. (000-178-084-10)	
	SP03-19701	001-531-630	1	Fuse for Antenna Unit w/de-icer • FGBO-A 250V 3A PBF, 4 pcs. (000-155-841-10)	
Hoist S-band Antenna Manual	C32-01303-*	000-178-043-**	1		

*: Some antenna configurations do not have an in-built Performance Monitor. The Performance Monitor PM-52A is mandatory for IMO-type radars

For S-band TR-UP solid state radar: FAR-2238S-NXT(-BB)/FAR-2338S-NXT

Name	Type	Code No.	Qty	Remarks	
Antenna Unit	SN24CF-RSB133-111	-	1	8 ft, 250 W	• Unavailable on IMO-type radars. • w/PM-52B*
	SN30CF-RSB133-111	-	1	10 ft, 250 W	
	SN36CF-RSB133-111	-	1	12 ft, 250 W	w/PM-52B*
Processor Unit	RPU-025	-	1		
Monitor Unit	MU-190	-	1	For FAR-2238S-NXT	
	MU-231	-		For FAR-2338S-NXT	
	MU-270W	-			
Control Unit	RCU-014	-	1	Standard type	
	RCU-015	-		Trackball type	
	RCU-031	-		For BB type of C-type radars	
Installation Materials	CP03-35202	001-249-880	1	For radiator	
	CP03-35402	001-255-430	1	For RSB (no de-icer)	
	CP03-35404	001-270-080	1	For RSB (w/de-icer)	
	CP03-35500 [15M]	000-024-096	1	For Antenna Unit, 15 m	
	CP03-35510 [30M]	000-024-097		For Antenna Unit, 30 m	
	CP03-35520 [40M]	000-024-098		For Antenna Unit, 40 m	
	CP03-35530 [50M]	000-024-099		For Antenna Unit, 50 m	
	CP03-37801	001-489-150	1	For RPU-025	
	CP03-25604	001-418-420	1	For RCU-014/015	
Accessories	FP03-09880	001-576-470	1	For RCU-014	
	FP03-09860	001-419-140	1	For RCU-015	
Spare Parts	SP03-17641	001-249-740	1	Fuse for Processor Unit of 24 rpm radar • FGBO-A 250V 7A PBF, 2 pcs. (000-178-084-10)	
	SP03-17651	001-249-750	1	Fuse for Processor Unit of 42 rpm radar • FGBO-A 250V 3A PBF, 2 pcs. (000-155-841-10) • FGBO-A 250V 7A PBF, 2 pcs. (000-178-084-10)	
	SP03-19701	001-531-630	1	Fuse for Antenna Unit w/de-icer • FGBO-A 250V 3A PBF, 4 pcs. (000-155-841-10)	
Hoist S-band Antenna Manual	C32-01303-*	000-178-043-**	1		

*: Some antenna configurations do not have an in-built Performance Monitor. The Performance Monitor PM-52B is mandatory for IMO-type radars

For X-band TR-DOWN radar: FAR-2328W

Name	Type	Code No.	Qty	Remarks	
Antenna Unit	XN20CF-RSB130	-	1	6.5 ft	w/PM-32A*
	XN24CF-RSB130	-		8 ft	
Transceiver Unit	RTR-108	-	1		
Processor Unit	RPU-025	-	1		
Monitor Unit	MU-231	-	1		
	MU-270W	-			
Control Unit	RCU-014	-	1	Standard type	
	RCU-015	-		Trackball type	
Installation Materials	CP03-35201	001-249-860	1	For radiator	
	CP03-35901	001-300-540	1	For RSB (no de-icer)	
	CP03-35902	001-300-550		For RSB (w/de-icer)	
	CP03-35500[15M]	000-024-096	1	For Antenna Unit, 15 m	
	CP03-35510[30M]	000-024-097		For Antenna Unit, 30 m	
	CP03-35520[40M]	000-024-098		For Antenna Unit, 40 m	
	CP03-35530[50M]	000-024-099		For Antenna Unit, 50 m	
	CP03-37801	001-489-150	1	For RPU-025	
	CP03-25604	001-418-420	1	For RCU-014/015	
	CP03-16400	000-086-743	1	w/CP03-16401	
	CP03-16410	000-086-744		Flexible waveguide, 20 m w/CP03-16411	
	CP03-16420	000-086-745		Flexible waveguide, 30 m w/CP03-16411	
	CP03-16430	000-086-746		Flexible waveguide, 50 m w/CP03-16411	
Accessories	FP03-09880	001-576-470	1	For RCU-014	
	FP03-09860	001-419-140	1	For RCU-015	
Spare Parts	SP03-17641	001-249-740	1	Fuse for Processor Unit of 24 rpm radar • FGBO-A 250V 7A PBF, 2 pcs. (000-178-084-10)	
	SP03-19701	001-531-630	1	Fuse for Antenna Unit w/de-icer • FGBO-A 250V 3A PBF, 4 pcs. (000-155-841-10)	
Hoist X-Band Antenna Instructions	C32-01302-*	000-178-042-**	1		

*: The Performance Monitor PM-32A is mandatory for IMO-type radars

For S-band TR-DOWN radar: FAR-2338SW

Name	Type	Code No.	Qty	Remarks
Antenna Unit	SN36CF-RSB131	-	1	12 ft, w/PM-52A*
Transceiver Unit	RTR-109	-	1	
Processor Unit	RPU-025	-	1	
Monitor Unit	MU-231	-	1	
	MU-270W	-		
Control Unit	RCU-014	-	1	Standard type
	RCU-015	-		Trackball type
Installation Materials	CP03-35202	001-249-880	1	For radiator
	CP03-36101	001-301-200	1	For RSB (no de-icer)
	CP03-36102	001-301-360		For RSB (w/de-icer)
	CP03-35500[15M]	000-024-096	1	For Antenna Unit, 15 m
	CP03-35510[30M]	000-024-097		For Antenna Unit, 30 m
	CP03-35520[40M]	000-024-098		For Antenna Unit, 40 m
	CP03-35530[50M]	000-024-099		For Antenna Unit, 50 m
	CP03-37801	001-489-150	1	For RPU-025
	CP03-25604	001-418-420	1	For RCU-014/015
	CP03-36300	000-025-573	1	Coax cable, 20 m
	CP03-36310	000-025-574		Coax cable, 30 m
Accessories	FP03-09880	001-576-470	1	For RCU-014
	FP03-09860	001-419-140	1	For RCU-015
Spare Parts	SP03-17641	001-249-740	1	Fuse for Processor Unit of 24 rpm radar • FGBO-A 250V 7A PBF, 2 pcs. (000-178-084-10)
	SP03-17651	001-249-750	1	Fuse for Processor Unit of 42 rpm radar • FGBO-A 250V 3A PBF, 2 pcs. (000-155-841-10) • FGBO-A 250V 7A PBF, 2 pcs. (000-178-084-10)
	SP03-19701	001-531-630	1	Fuse for Antenna Unit w/de-icer • FGBO-A 250V 3A PBF, 4 pcs. (000-155-841-10)
Hoist S-Band Antenna Instructions	C32-01303-*	000-178-043-**	1	

*: The Performance Monitor PM-52A is mandatory for IMO-type radars

Console type (RCN-319/323/327)

Name	Type	Code No.	Qty.	Remarks
Standard Console	RCN-319	-	1	For 19-inch monitor
	RCN-323	-		For 23-inch monitor
	RCN-327	-		For 27-inch monitor
Spare Parts	SP03-19200	000-034-305	1	For X-band radar, S-band (24rpm) radar, without HUBs.
	SP03-19210	000-034-306		For S-band (42rpm) radar, without HUBs.
	SP03-19220	000-034-307		For X-band radar, S-band (24rpm) radar, w/ HUB-100.
	SP03-19230	000-034-308		For S-band (42rpm) radar, w/ HUB-100.
	SP03-19240	000-034-309		For X-band radar, S-band (24rpm) radar, w/ HUB-3000.
	SP03-19250	000-034-310		For S-band (42rpm) radar, w/ HUB-3000.
	SP03-19260	000-034-311		For X-band radar, S-band (24rpm) radar, w/ HUB-100 and HUB-3000.
	SP03-19270	000-034-312		For S-band (42rpm) radar, w/ HUB-100 and HUB-3000.
Installation Materials	CP03-38000	000-034-321	1	
Accessories	FP03-12700	000-034-322	1	

Console type (RCN-305/306)

Name	Type	Code No.	Qty.	Remarks
Standard Console	RCN-306	-	1	For 19-inch monitor
	RCN-305	-		For 23-inch monitor
Spare Parts	SP03-19200	000-034-305	1	For X-band radar, S-band (24rpm) radar, without HUBs.
	SP03-19220	000-034-307		For X-band radar, S-band (24rpm) radar, w/ HUB-100.
	SP03-19240	000-034-309		For X-band radar, S-band (24rpm) radar, w/ HUB-3000.
	SP03-19260	000-034-311		For X-band radar, S-band (24rpm) radar, w/ HUB-100 and HUB-3000.
Installation Materials	CP03-38000	000-034-321	1	
Accessories	FP03-12800	000-036-847	1	

Optional supply

Name	Type	Code No.	Remarks
Control Unit	RCU-014	-	Standard type
	RCU-015	-	Trackball type
	RCU-016	-	Trackball type
	RCU-031	-	Compact type
Junction Box	RJB-001	000-083-355	

Name	Type	Code No.	Remarks
AD Converter	AD-100-E	-	
Signal Cable Assy.	S03-9-5 (8-8P)	008-206-640	For sub monitor of ECDIS, 5 m, RW-4864 w/VH8 connector
	S03-9-10 (8-8P)	008-206-650	For sub monitor of ECDIS, 10 m, RW-4864 w/VH8 connector
	S03-9-15 (8-8P)	008-209-160	For sub monitor of ECDIS, 15 m, RW-4864 w/VH8 connector
Switching HUB	HUB-100	-	
Intelligent HUB	HUB-3000	-	
Deicer Kit	OP03-226	001-254-320	For X-band, TR-UP radar
	OP03-227	001-254-330	For S-band, TR-UP radar
	OP03-231	001-305-060	For X-band, TR-DOWN radar
	OP03-232	001-305-070	For S-band, TR-DOWN radar
Installation Materials	CP03-28900(10M)	000-082-658	LAN cable for sensor network
	CP03-28910(20M)	000-082-659	
	CP03-28920(30M)	000-082-660	
Monitor Unit	MU-190	-	19-inch monitor
	MU-231	-	23.1- inch monitor
	MU-270W	-	27-inch wide monitor
Hood Assembly	OP26-6	001-080-930	For MU-190
	OP26-16	001-116-740-01	For MU-231
Hood Assembly (Front)	OP26-32	001-439-090	For MU-270W
Hood Assembly (Rear)	OP26-33	001-439-110	For MU-270W
Flush Mount Kit	OP26-12	001-116-280	For MU-190
	OP26-17	001-116-750	For MU-231
Flush Mount Assembly (Rear)	OP26-31	001-439-070	For MU-270W
Flushmount Kit	FP03-09870	008-535-630	For RCU-014/015/016, fixing at rear
Flush Mount Kit	OP03-245	001-489-470	For RCU-014, using with panel
Connection Stand (20)	OP03-183	008-535-640	
Connection Stand (23)	OP03-184	008-535-650	
Connector	CP03-28901	008-542-460	LAN modular plug
Signal Cable Assy.	S03-92-15(8P)	001-259-890	For sub monitor, 15 m, RW-00136 w/VH8 connector
	S03-92-30(8P)	001-259-900	For sub monitor, 30 m, RW-00136 w/VH8 connector
	S03-92-40(8P)	001-259-910	For sub monitor, 40 m, RW-00136 w/VH8 connector
	S03-92-50(8P)	001-259-920	For sub monitor, 50 m, RW-00136 w/VH8 connector
Bracket Assembly	OP26-21	001-139-310	For MU-190 connection
Connection stand (19)	OP26-20	001-139-300	For MU-190 connection
Clamp Assembly	OP03-182	008-535-620	For RCU-014

Name	Type	Code No.	Remarks
Cable Assy.	DVI-D/D S-LINK 5M	001-133-960-10	Between Processor Unit and monitor unit, 5 m
	DVI-D/D S-LINK 10M	001-133-980-10	Between Processor Unit and monitor unit, 10 m
LAN Cable Assembly	MOD-Z072-020+	001-167-880-10	For LAN cable between RPU-025 and HUB-100, 2 m
	MOD-Z072-050+	001-167-890-10	For LAN cable between RPU-025 and HUB-100, 5 m
Cable Assy.	DSUB9P-X2-A-L5M	001-252-580	Brilliance control cable for Hatteland monitor, 5 m
	DSUB9P-X2-A-L10M	001-252-590	Brilliance control cable for Hatteland monitor, 10 m
Cable Assembly	XH10P-W-6P L=20M	001-437-540	Processor Unit-Control Unit, 20 m
	XH10P-W-6P L=30M	001-437-550	Processor Unit-Control Unit, 30 m
Cable Assembly	XH10P-W-5P-A L=10M	001-247-690	For Control Unit (RCU-016), 10 m
	XH10P-W-5P-A L=20M	001-247-700	For Control Unit (RCU-016), 20 m
	XH10P-W-5P-A L=30M	001-247-710	For Control Unit (RCU-016), 30 m
	XH10P-W-5P-A L=1.5M	001-489-240	For Control Unit (RCU-016), 1.5 m
Connection Stand (23)	OP03-243-1	001-489-380	For MU-231 connection
Connection Stand (27)	OP03-244-1	001-489-430	For MU-270W connection
Hood (19) Assembly	OP26-24	001-139-370	MU-190 for RCN-319
Hood (23) Assembly	OP26-25	001-139-380-01	MU-190 for RCN-323
Dust Cover	03-193-7019	001-489-520	For RCN-319/323/327
Unit Mounting Base	OP24-51	001-461-600	For RCN-319/323/327
Cable Assembly	IOK-V0024-2	001-460-210	For LAN cable between RPU-025 and HUB-3000
Hub-Fan Kit	OP03-246	001-490-320	For RCN-319/323/327
Back Cover (19)	OP24-53	001-490-580	For RCN-319
Back Cover (23)	OP24-54	001-490-590	For RCN-323
Back Cover (27)	OP24-55	001-490-600	For RCN-327
Console Kit	RCN319N	-	
	RCN323/327N	-	
Bracket Assembly	OP26-5	000-016-270	For MU-190
	OP26-15	001-116-730	For MU-231
	OP26-30	001-439-060	For MU-270W
LAN Signal Converter	OP03-247-1	001-496-560	For RSB-133
	OP03-247-2	001-496-570	For RSB-129
	OP03-247-3	001-496-580	For RSB-128, magnetron radar
	OP03-247-4	001-568-890	For RSB-128, solid state radar

Name	Type	Code No.	Remarks
Cable Extension Kit	OP03-251-1	001-496-600	For RSB-133
	OP03-251-2	001-496-610	For RSB-129
	OP03-251-3	001-496-620	For RSB-128, magnetron radar
	OP03-251-4	001-568-950	For RSB-128, solid state radar
High Speed Kit	OP03-248	001-496-640	For S-band radar
PM Installation Kit	OP03-254-1	001-505-240	For RSB-133
	OP03-254-2	001-505-250	For RSB-129
	OP03-254-3	001-505-290	For RSB-128, magnetron radar
	OP03-254-4	001-568-860	For RSB-128, solid state radar
Retrofit Cable Kit	OP03-255-1	001-505-320	For RSB-129/133
	OP03-255-3	001-505-350	For RSB-128
Standard Cable Kit	OP03-256-1	001-508-020	For RSB-129/133
	OP03-256-3	001-508-030	For RSB-128
Console Replacement Kit	OP03-253-1	001-508-160	For FAR-2xx7 console, w/ AD-100
	OP03-253-2	001-508-170	For FAR-2xx7 console, no AD-100
RP Board Installation Kit	OP03-258-1	001-523-270	For software version 01.**
	OP03-258-4	001-546-980	For software version 50.**
Installation Materials	CP24-02900(10M)	001-208-050	LAN cable for HUB-3000
	CP24-02910(20M)	001-208-060	LAN cable for HUB-3000
	CP24-02920(30M)	001-208-070	LAN cable for HUB-3000
DVI-BNC Cable Kit	OP03-252	001-496-900	For connecting a VDR
Operator's Manual	OME-36520-*	000-193-878-**	English
	OMJ-36520-*	000-193-877-**	Japanese
Waveguide Tool	BSH-15279	001-461-510	For S-band, TR-DOWN radar
Waveguide Twist	RWA-1050 C-109	001-304-660	For X-band, TR-DOWN radar
Rectangular Guide Clamp	OP03-148	008-477-540	
FR-9 Termination	FR-9-00	001-102-740	
Waveguide Drain	03-009-0360	001-351-950	
H-type Waveguide Clamp	CP03-00600-W	008-198-420	
E-Bend Waveguide	RWA-1030 B-107	001-304-640	
Thru-deck Cable Gland	CP03-00702	008-197-350	For S-band, TR-DOWN radar
Cable Clamping Fixture	03-011-3228	001-074-670-10	
AC-DC Power Supply Unit	PR-850A	000-025-159	
Magnetron Replacement Instruction Manual	E32-01306-*	000-178-278-**	English, For FAR-2x18/2x28/2x38
	J32-01306-*	000-178-277-**	Japanese, For FAR-2x18/2x28/2x38
Wave Analyzer	WV-100	001-562-500	
	WV-100ST	001-562-510	w/ SEA-TRIAL mode
SSD REPLACEMENT KIT	OP03-263	001-576-900	
Operator's Manual (JP/EN)	OMC-36181-*	000-196-578-**	For Wave Analyzer

About the category sticker

This radar meets the requirements in IEC62388 (Marine navigation and radiocommunication equipment and systems-Shipborne radar-Performance requirements, method of testing and required test results). Check the appropriate box on the sticker which is pre-attached to the Processor Unit, according to your radar's specification. Refer to the following table to confirm your category. The radar category depends on the installed monitor.

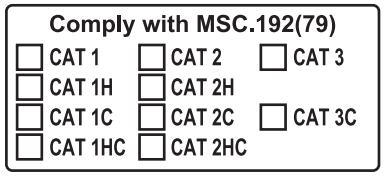

Sticker for category

Category	Radar type	ANT. rotation speed
CAT 1	FAR-2318, FAR-2328, FAR-2328W, FAR-2338S, FAR-2338SW, FAR-2338-NXT	24 rpm
CAT 1H	Same models as above	42 rpm
CAT 2	FAR-2218, FAR-2228, FAR-2238S, FAR-2238S-NXT	24 rpm
CAT 2H	Same models as above	42 rpm
CAT 3	FAR-2218, FAR-2228, FAR-2238S, FAR-2238S-NXT	24 rpm

For BB type, a monitor unit meeting the category requirements of IMO must be prepared by the user.

1. INSTALLATION

NOTICE

Do not apply paint, anti-corrosive sealant or contact spray to coating or plastic parts of the equipment.
Those items contain organic solvents that can damage coating and plastic parts, especially plastic connectors.

1.1 Antenna Unit (X-band Radar)

1.1.1 Installation Considerations

- The Antenna Unit is generally installed either on top of the wheelhouse or on the radar mast, on a suitable platform. Locate the Antenna Unit in an elevated position to permit maximum target visibility.
- A line of sight from the Antenna Unit to the bow of the ship must hit the surface of the sea in not more than 500 m or twice the ship's length, depending whichever value is smaller, for all load and trim conditions.

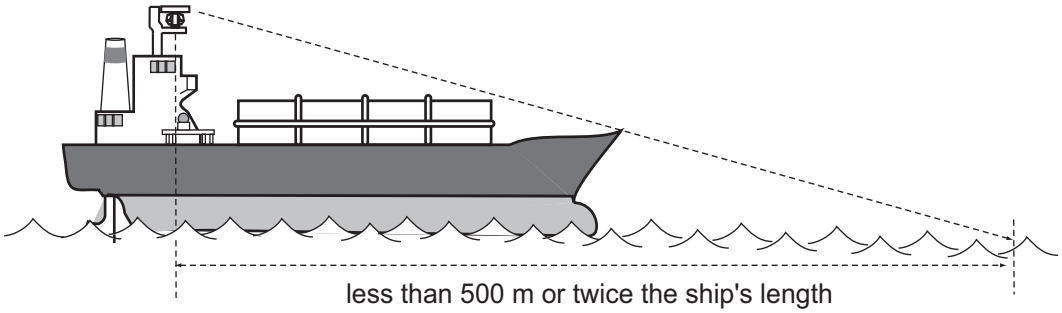

- Install the Antenna Unit so that any blind sectors caused by objects (mast, etc.) are kept to a minimum. A blind sector must not exist in arc of the horizon from right ahead to 22.5° aft of the beam to either side (see the figure below). Also, individual blind sectors of more than 5°, or the total arc of both blind sectors of more than 20°, must not occur in the remaining arc (Figure 2). Note that any two blind sectors separated by 3° or less are regarded as one sector.

Figure 1

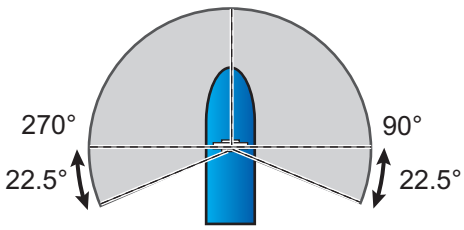

Figure 2

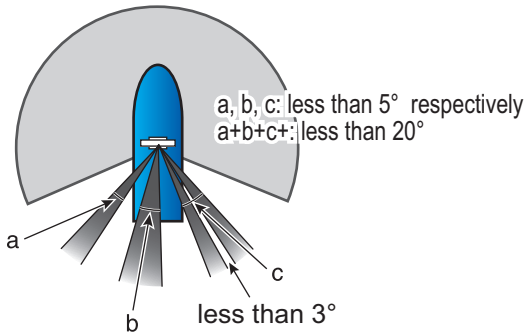

- Do not install the antenna where extreme winds may strike the port and starboard sides of the antenna.

- Install the Antenna Unit away from interfering high-power energy sources and TX radio antennas.
- Keep the lower edge of the Antenna Unit above the safety rail by at least 500 mm.
- Install two Antenna Units as shown in the figure below.

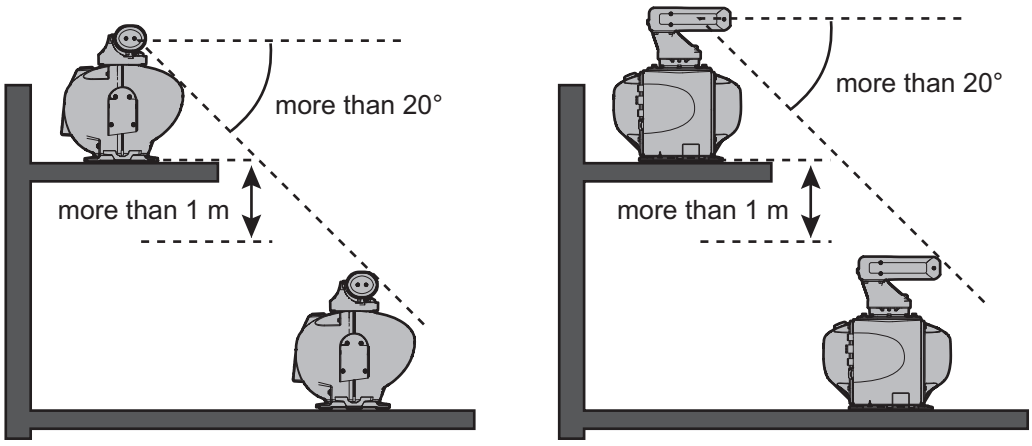

X-band radar S-band radar

- No funnel, mast or derrick shall be within the vertical beamwidth of the Antenna Unit in the bow direction, especially zero degree ±5°, to prevent blind sectors and false echoes on the radar picture.
- It is rarely possible to place the Antenna Unit where a completely clear view in all directions is available. Therefore, determine the angular width and relative bearing of any shadow sectors for their influence on the radar at the first opportunity after fitting.
- Locate the antenna of an EPFS clear of the radar antenna to prevent interference to the EPFS. A separation of more than two meters is recommended.
- A magnetic compass will be affected if the Antenna Unit is placed too close to the compass. Observe the compass safe distances on page ii to prevent interference to a magnetic compass.
- Do not paint the radiator aperture, to ensure proper emission of the radar waves.
- Ground the unit with the ground wire (supplied).
- Deposits and fumes from a funnel or other exhaust vent can affect the aerial performance and hot gases may distort the radiator portion. Do not install the Antenna Unit where the temperature is more than 55 °C.
- Leave sufficient space around the unit for maintenance and servicing. See the Antenna Unit outline drawing for recommended maintenance space.
- For X-band radar, an antenna switch is provided on the chassis to stop the antenna. Make sure the mounting location provides easy access to the switch.

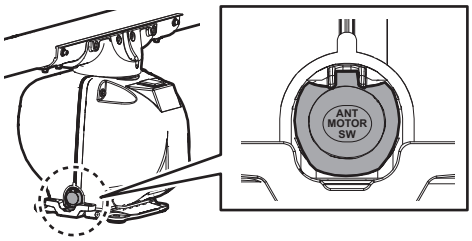

- For X-band radar, if it is necessary to lay down the radiator before you fasten it to the Antenna Unit, lay it down with the waveguide up, to prevent damage to the cylinder that surrounds the waveguide.

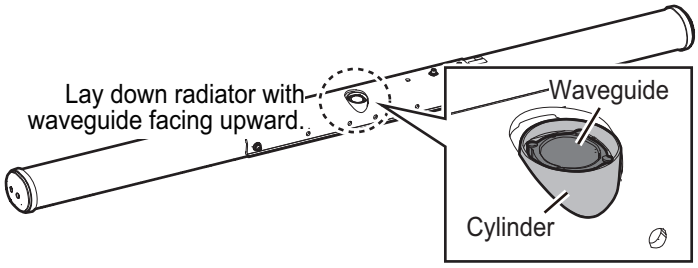

- If the de-icer is installed, a two-pole breaker (supplied locally) must also be installed.

Note: For more information, please refer to IMO SN/Circ.271 "Guidelines for the installation of shipborne radar equipment.

1.1.2 How to assemble the Antenna Unit (FAR-2x18/2x28/2x38)

The Antenna Unit consists of the antenna radiator and the Antenna Unit chassis, and they are packed separately. Fasten the antenna radiator to the Antenna Unit chassis as follows:

1. Coat the hatched area shown in the figure in step 2 with the supplied adhesive.
2. Remove the protective waveguide cap from the waveguide on the radiator bracket.

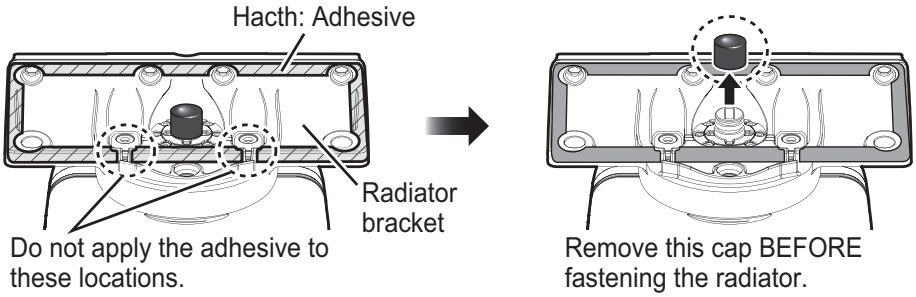

3. Pass the Gasket (03-182-3186, supplied) to six sets of the Antenna fixing bolts (03-182-4188, supplied, w/two flat washers), and then coat the threads of the Antenna fixing bolts with the supplied adhesive. Set the radiator on the radiator bracket.

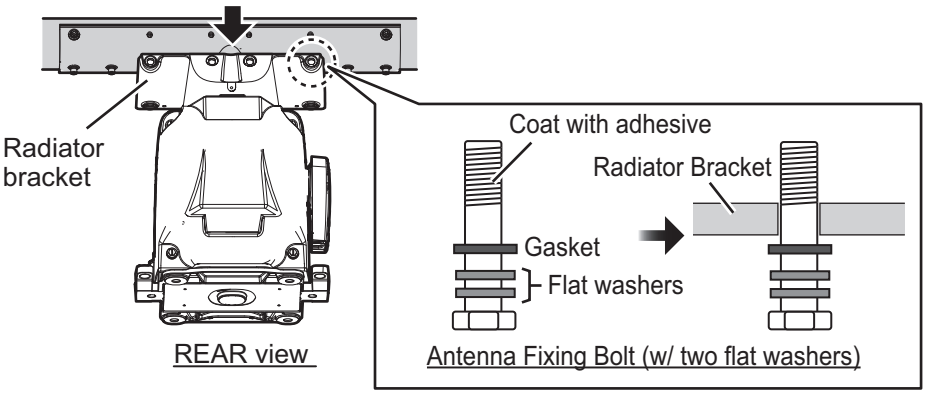

4. Fasten the antenna radiator to the radiator bracket with the six sets of Antenna fixing bolts. **Fasten the bolts in the order shown in the figure to the right**. The torque must be 15.0 N•m.

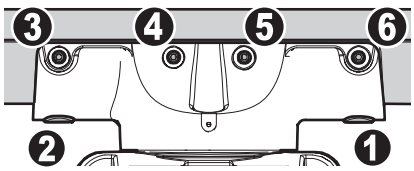

5. Coat the Antenna fixing bolts fixed at step 4 with the supplied adhesive as shown in the right figure.

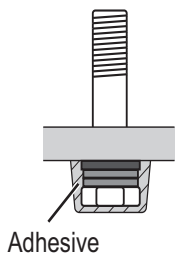

1.1.3 How to assemble the Antenna Unit (FAR-2x58)

The Antenna Unit consists of the antenna radiator and the Antenna Unit chassis, and they are packed separately. Fasten the antenna radiator to the Antenna Unit chassis as follows:

1. Attach the supplied two guide pins to the underside of the antenna radiator.
2. Remove the protective waveguide cap from the waveguide on the radiator bracket.
3. Coat the grayed area shown below with the supplied adhesive.

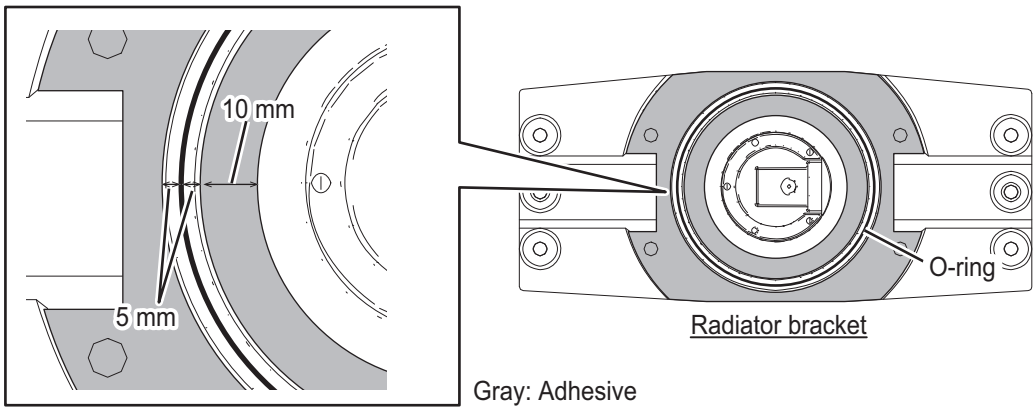

4. Grease the O-ring and set it to the O-ring groove of the radiator flange.
5. Set the supplied spring washers and flat washers then coat the adhesive to the threads of the supplied hex. bolts M8×40.
6. Set the antenna radiator to the radiator bracket.

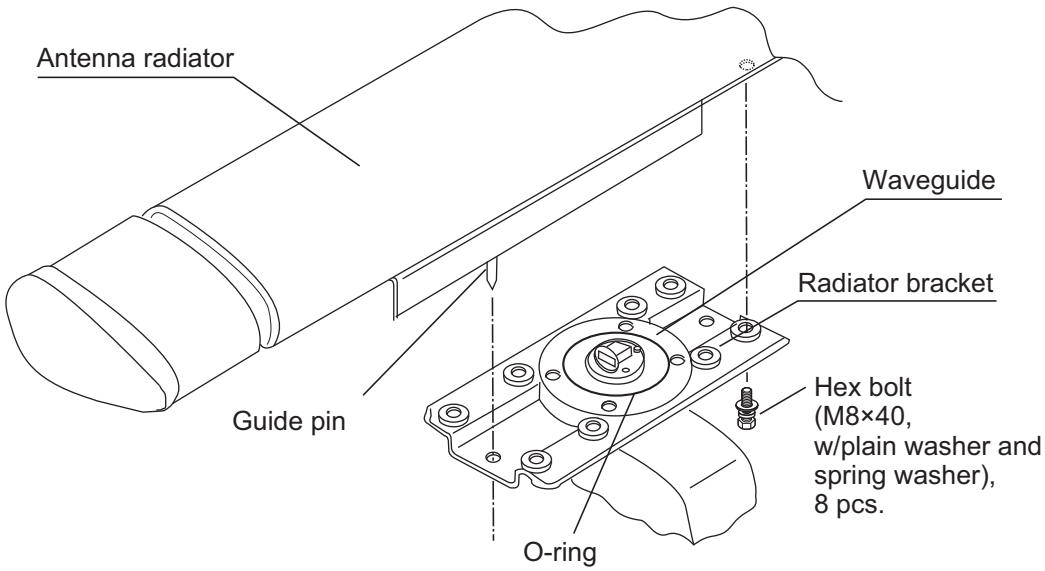

7. Remove the two guide pins (inserted at step 1), and then tighten fixing bolts. The torque must be 15 N•m.

⚠ CAUTION

Be sure to remove the guide pins.

Injury may result if the guide pins loosen and fall.

8. Coat hex bolts M8×40 with the supplied adhesive and use them to loosely fasten the antenna radiator to the Antenna Unit chassis.

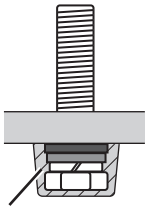

1.1.4 How to hoist the Antenna Unit (FAR-2x18/2x28/2x38)

The Antenna Unit may be assembled before hoisting it to the mounting platform. Attach lifting belt slings to the “Radiator Bracket”, NOT the antenna radiator, as shown in the figure below.

Also, hoist the Antenna Unit slowly. Hoisting swiftly may cause a damage to the antenna radiator or damage the radiator chassis.

There are two methods to hoist the Antenna Unit.

Method 1

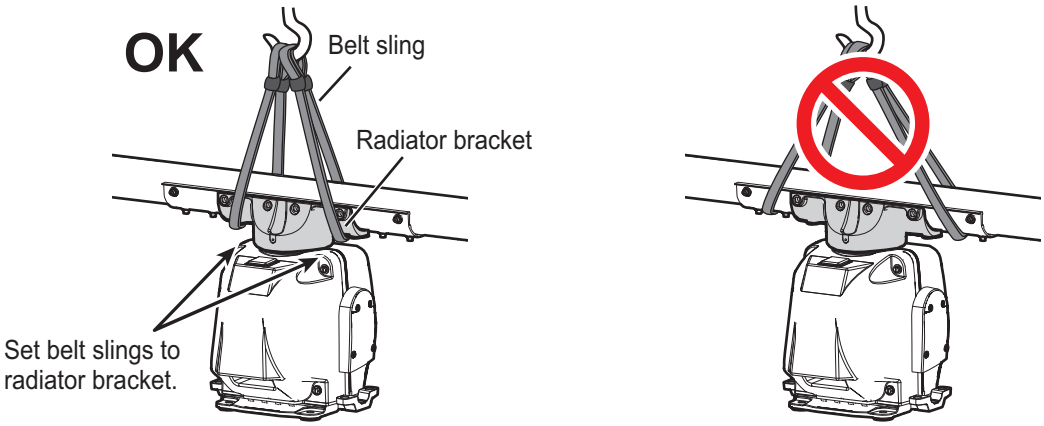

Method 2

Fasten belt sling to a shackle, pass belt sling around radiator bracket and fasten other end of belt sling to other shackle.

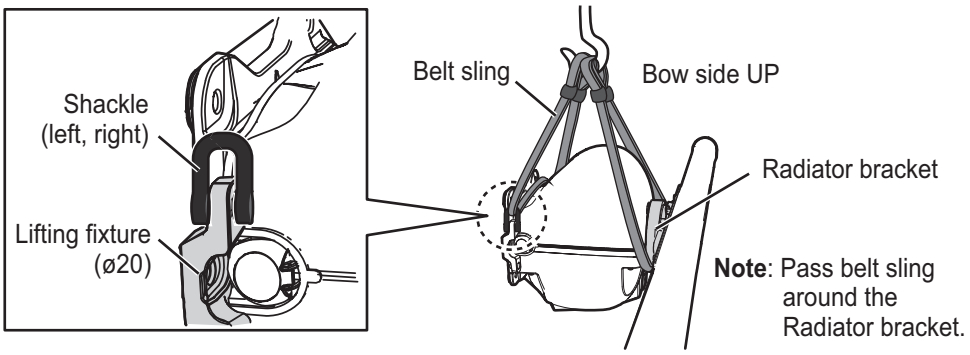

1.1.5 How to hoist the Antenna Unit (FAR-2x58)

The Antenna Unit may be assembled before hoisting it to the mounting platform. Do one of the following to hoist the Antenna Unit. Attach shackles (ϕ20, local supply) to the lifting fixtures to use belt slings. After the Antenna Unit is securely placed, remove the shackles.

Also, hoist the Antenna Unit slowly. Hoisting swiftly may cause a damage to the antenna radiator or damage the radiator chassis.

Method 1

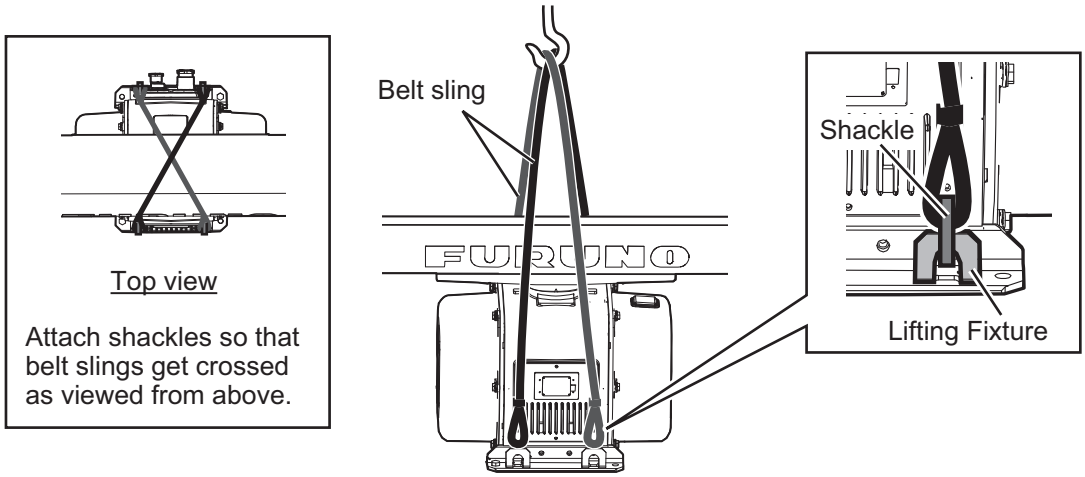

Note: Do not hoist the Antenna Unit by hanging belt slings around the radiator directly.

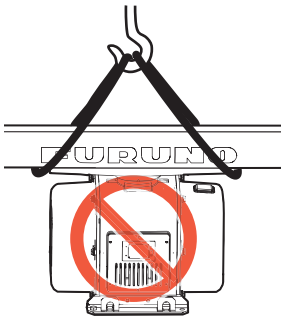

Method 2

Fasten one belt sling to both shackles, and pass the other belt sling around the stern side of the radiator.

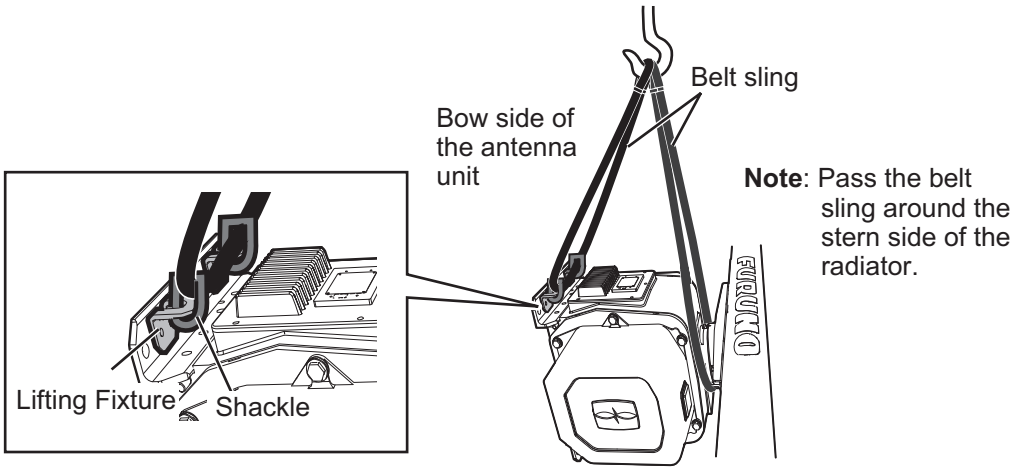

1.1.6 How to fasten the Antenna Unit to the mounting platform (FAR-2x18/2x28/2x38)

1. Construct a suitable mounting platform referring to the outline drawing at the end of this manual.
   Note: The mounting platform must be flat, level and firmly secured.
   - The diameter of the mast for fixing the Antenna Unit platform must be over 180 mm.
   - The thickness of the Antenna Unit platform must be over 12 mm.
   - The reinforcement rib must be installed diagonally.

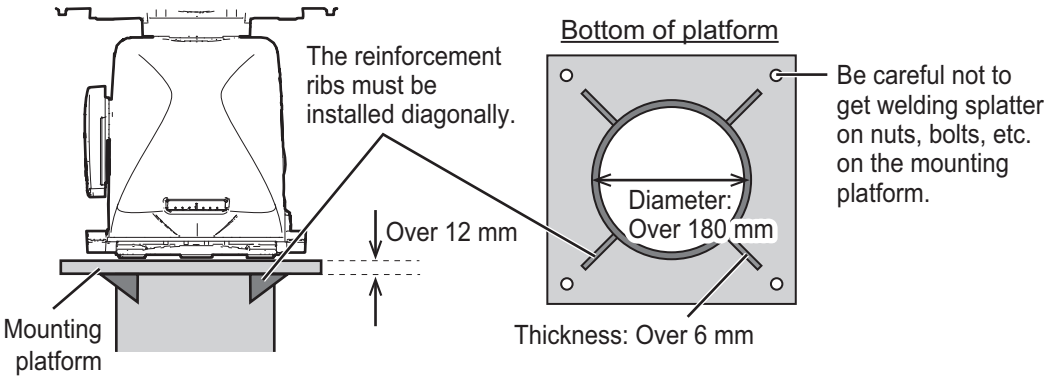

2. Referring to the outline drawing at the back of this manual, drill four mounting holes (ϕ15 mm) in the mounting platform.

3. Place the Antenna Unit on the platform, then orient the unit so the bow mark on its base is facing the ship's bow.
   Note: When the Antenna Unit is placed on the platform, make sure that the platform is not inclined.

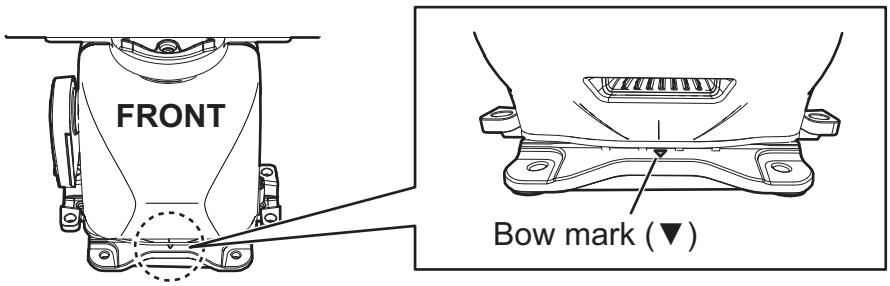

4. Insert four sets of hex bolts (M12×70) attached the seal washers to the mounting holes of the antenna chassis. Lift the antenna chassis slightly then insert the bolts attached the insulation sheets.
   Note: DO NOT insert the bolts from the underside of the platform. The cover cannot be opened.

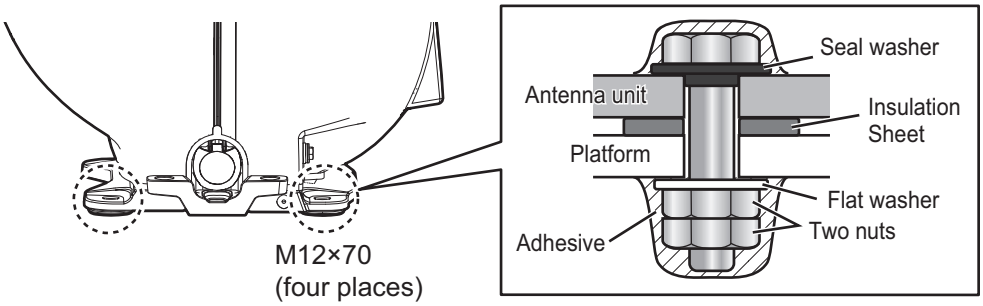

5. Adjust the direction of the Antenna Unit so the bow mark on its base is facing the ship's bow.
6. Fasten the Antenna Unit to the mounting platform with four sets of hex bolts (M12×70), nuts, flat washers and seal washers. Insert the bolts from the topside

of the platform. The torque must be 49 N•m. For how to fasten double nuts, see the following procedure.

How to fasten double nuts

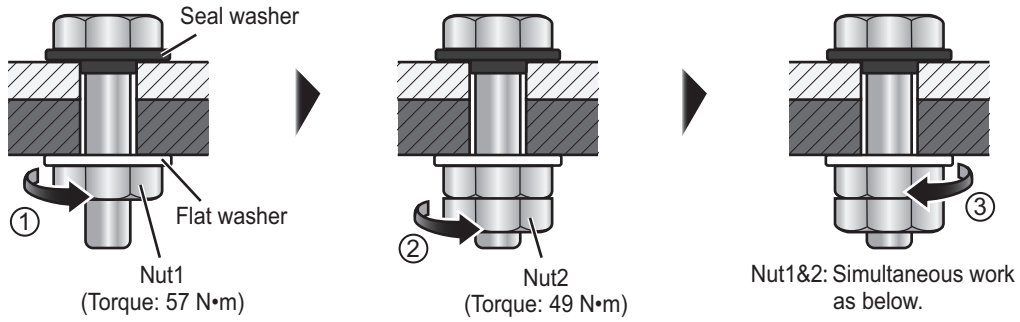

Note: Fasten the double nuts as shown in the figure to the right. Use spanners with a length of approx. 200 mm.

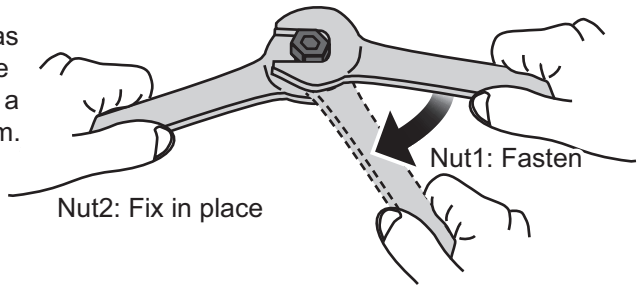

7. Using a hex bolt (M6×25), nut (M6) and flat washer (M6), establish the ground system on the mounting platform. The location must be within 340 mm of the ground terminal on the Antenna Unit. Connect the ground wire (RW-4747, 340 mm, supplied) between the grounding point and ground terminal on the Antenna Unit. Coat the hardware of the ground system with the supplied adhesive.

Antenna chassis side

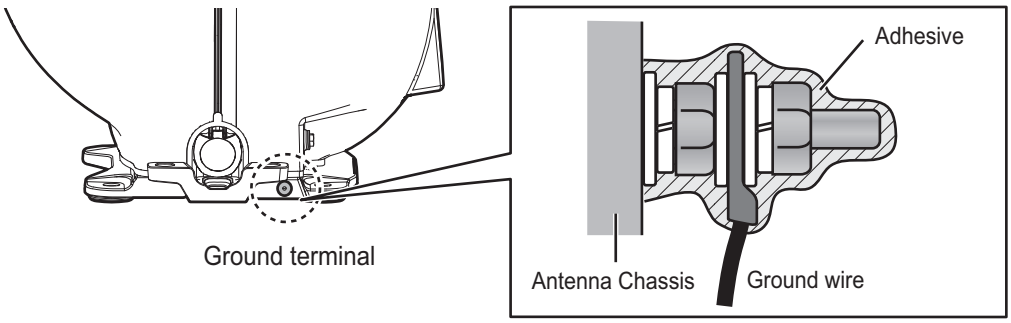

Mounting platform side

Arrange a ground terminal as close as possible to Antenna Unit. There are two methods to connect the ground wire for mounting platform side.

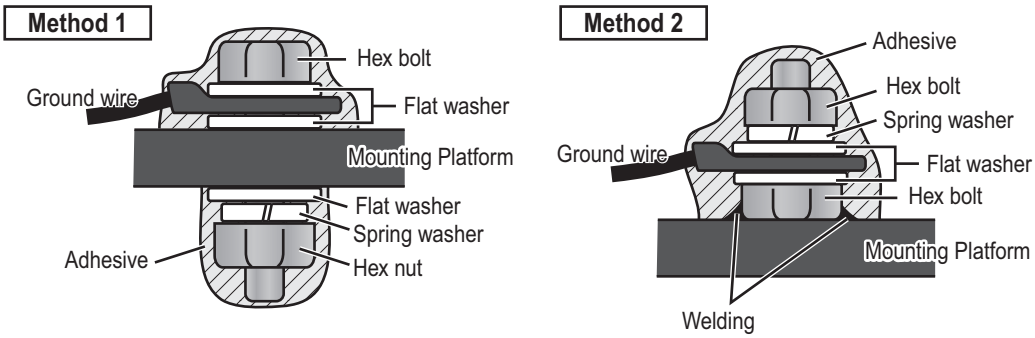

1.1.7 How to fasten the Antenna Unit to the mounting platform (FAR-2x58)

1. Construct a suitable mounting platform referring to the outline drawing at the end of this manual.
   Note: The mounting platform must be flat, level and firmly secured.
2. Lay the rubber mats (supplied) on the mounting platform.
3. Place the Antenna Unit on the supplied rubber mats, then orient the unit so the nameplate on the scanner box is facing the ship's bow.
   Note: When the Antenna Unit is placed on the platform, make sure that the platform is not inclined.

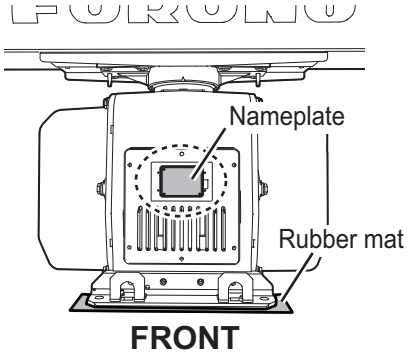

4. Insert four sets of hex bolts (M12×60) attached the seal washers to the mounting holes of the antenna chassis.
5. Adjust the direction of the Antenna Unit so the nameplate is facing the ship's bow.
6. Fasten the Antenna Unit to the mounting platform with four sets of hex bolts, nuts, flat washers and seal washers. The torque must be 49 N•m.

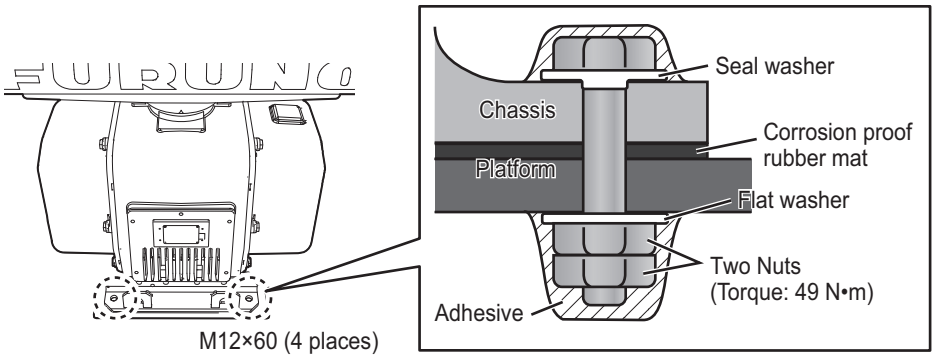

Note: For how to fasten the double nuts, "How to fasten double nuts" on page 1-9.

7. Using a hex bolt (M6×25), nut (M6) and flat washer (M6), establish the ground system on the mounting platform. The location must be within 340 mm of the ground

terminal on the Antenna Unit. Connect the ground wire (RW-4747, 340 mm, supplied) between the grounding point and ground terminal on the Antenna Unit. Coat the hardware of the ground system with the supplied adhesive.

Antenna chassis side

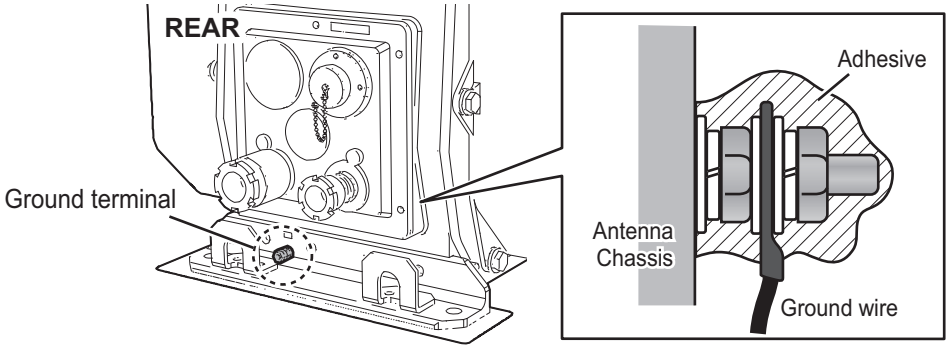

Mounting platform side

Arrange a ground terminal as close as possible to Antenna Unit. There are two methods to connect the ground wire for mounting platform side.

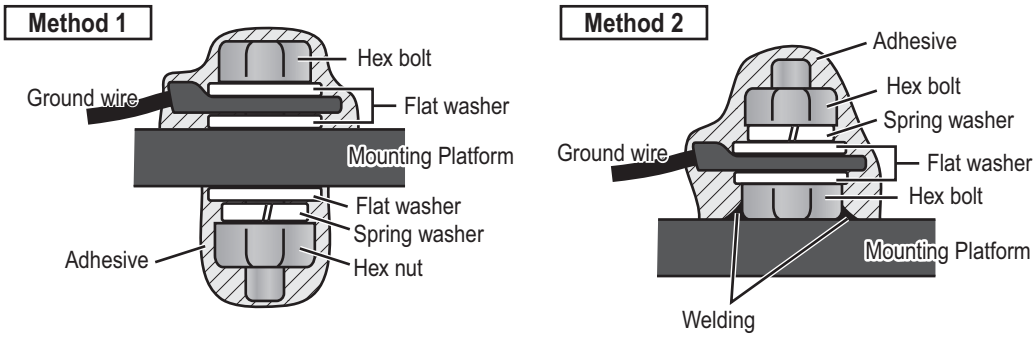

1.2 Antenna Unit (S-band Radar)

For installation considerations regarding the Antenna Unit, see section 1.1.1.

1.2.1 Installation precaution for S-band Antenna Unit

Due to the S-band radiator length, there may be excessive stress placed on the radiator caused by vibrations, rolling and general ship movement. To prevent damage to the Antenna Unit and radiator, do not install the antenna near the end of a platform. If there is no other location available, reinforce the platform before installing the Antenna Unit.

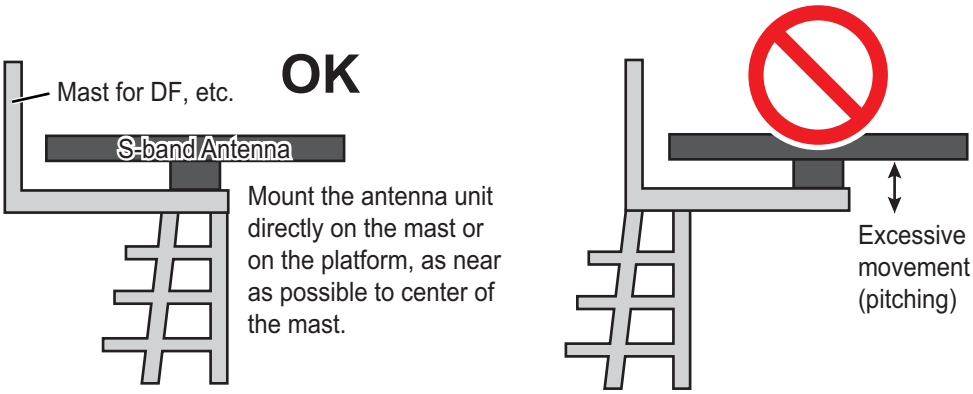

1.2.2 How to assemble the Antenna Unit

The Antenna Unit consists of the antenna radiator (w/antenna support) and the antenna unit chassis, and they are packed separately. Fasten the antenna radiator to the Antenna Unit chassis as follows:

1. Remove the protective waveguide cap from the waveguide on the radiator bracket.

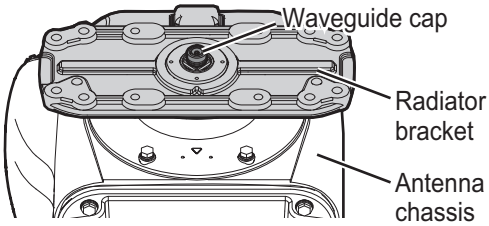

2. Set the radiator on the radiator bracket (w/antenna support) so the guide pins of the antenna support fit into the guide pin holes on the radiator bracket. (Orient the logo of the radiator to the side with bow mark on the bracket. If reversely oriented, the radiator cannot be set to the bracket.)

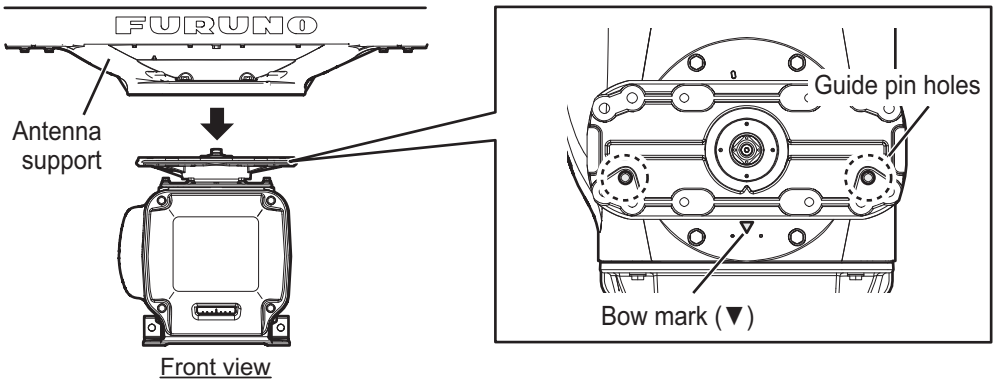

3. Coat the threads of eight hex bolts (M12×50, supplied) with the supplied adhesive.

4. Fasten the antenna radiator to the radiator bracket from the bottom of the bracket with the eight hex bolts, spring washers and flat washers. The torque must be 49 N•m.

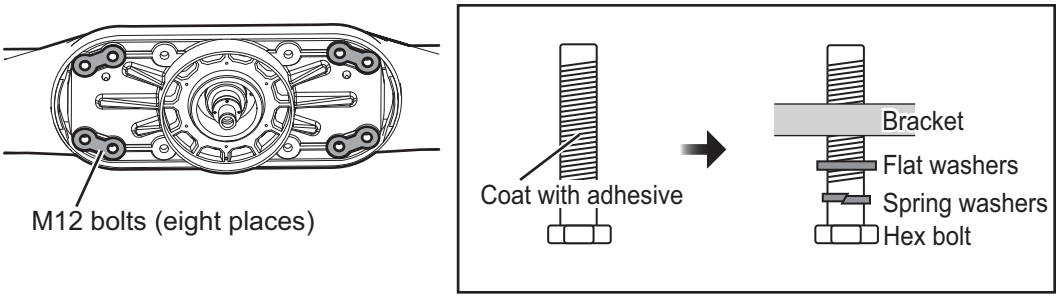

5. Coat the bolt heads fastened at step 4 with the supplied adhesive as shown in the figure to the right.

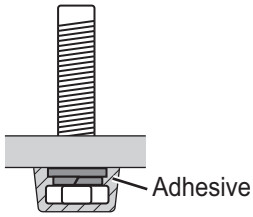

6. Connect the coaxial cable from the Antenna Unit to the rotary joint. The torque must be 25 N•m.

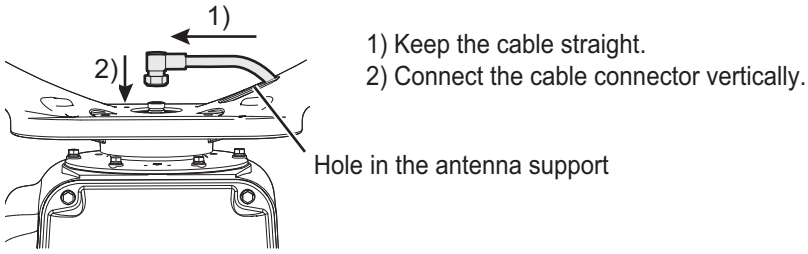

Note 1: The coaxial cable connector must be connected vertically.

Note 2: The coaxial cable must be horizontal and must not contact the antenna support hole.

Note 3: If the coaxial cable is long, bend the cable some distance from the connector. Insert surplus cable into antenna support. Connect the cable to the rotary joint, taking care that the threads of the cable and rotary joint are aligned.

7. Coat the hex bolts (M12×40, 4 pcs.) for the support cover with the supplied adhesive).

8. Fasten the support cover with the hex bolts, spring washers and flat washers. The torque must be 20 N•m.

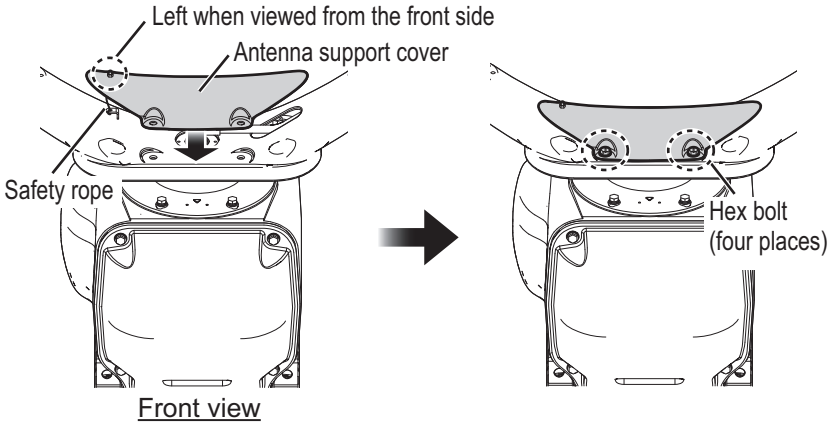

Note 1: Make sure the safety rope does not contact the antenna support cover.

Note 2: Set the screw for the safety rope to come to the left when viewed from the front side of the antenna.

1.2.3 How to hoist the Antenna Unit

The Antenna Unit may be assembled before hoisting it to the mounting platform. Attach lifting belt slings to the “Antenna Support”, NOT the antenna radiator, as shown in the figure below.

Also, hoist the Antenna Unit slowly. Hoisting swiftly may cause a damage to the antenna radiator or damage the radiator chassis.

There are two methods to hoist the Antenna Unit.

Method 1

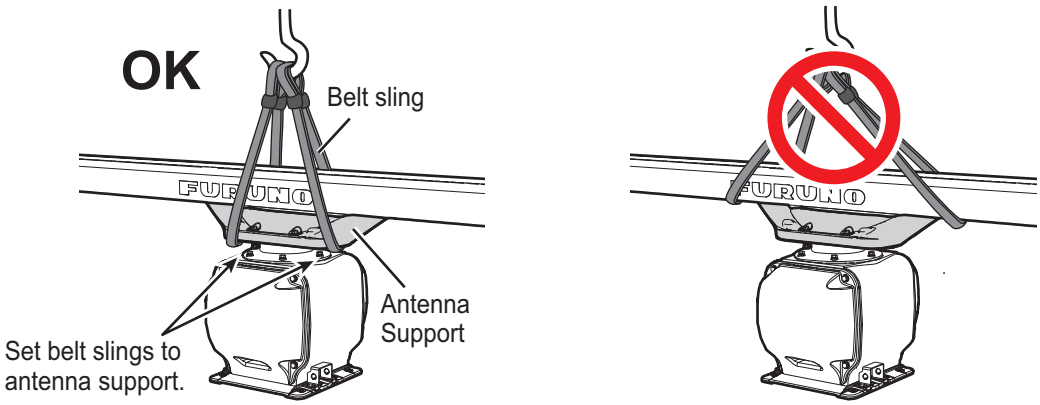

Method 2

Fasten the belt sling to a shackle, pass the belt sling around the antenna support and fasten the other end of the belt sling to the other shackle.

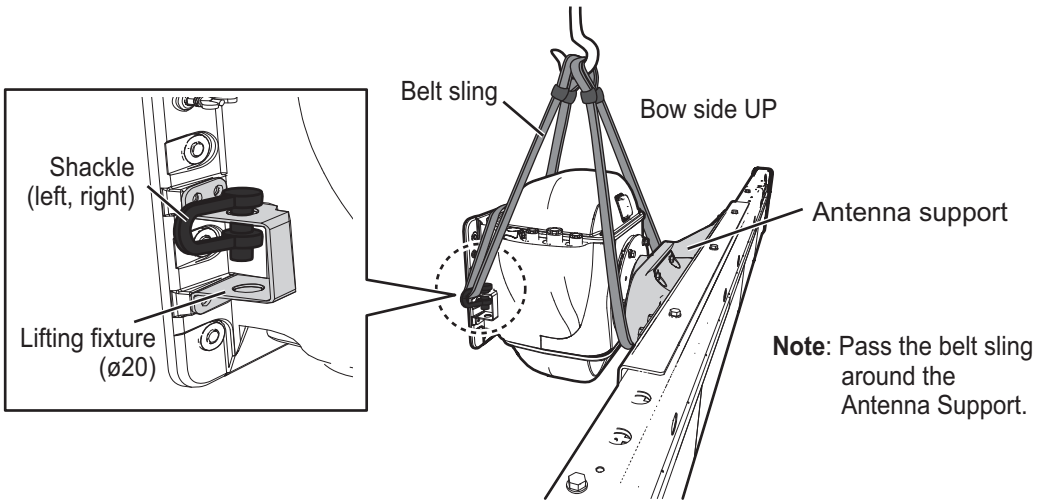

1.2.4 How to fasten the Antenna Unit to the mounting platform

1. Construct a suitable mounting platform referring to the outline drawing at the back of this manual.

   Note: The mounting platform must be flat, level and firmly secured.

   - The diameter of the mast for fixing the Antenna Unit platform must be over 250 mm.
   - The thickness of the Antenna Unit platform must be over 15 mm.
   - The reinforcement ribs must be installed diagonally shown in the following figure.

2. Referring to the outline drawing, drill four mounting holes (ϕ16 mm) in the mounting platform.

3. Place the Antenna Unit on the mounting platform, then orient the unit so the bow mark on its base is facing the ship's bow.

   Note: When the Antenna Unit is placed on the platform, make sure that the platform is not inclined.

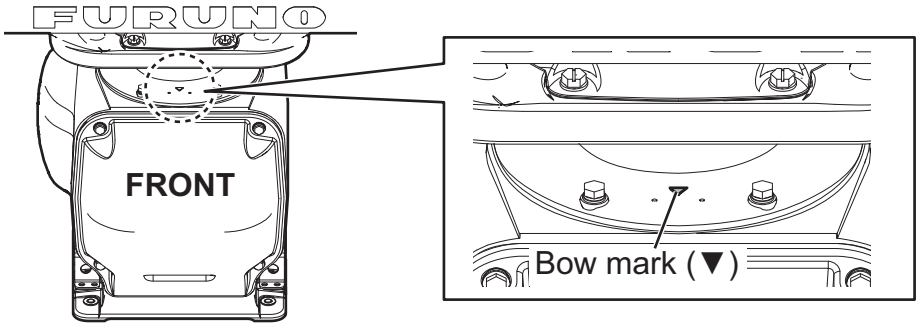

4. Fasten the Antenna Unit to the mounting platform with M12×70 hex bolts, nuts, flat washers, spring washers and seal washers (supplied). The torque must be 49 N•m. Fasten the double nuts, referring to "How to fasten double nuts" on page 1-9.

   Note: The bolts can also be inserted from the underside of the platform.

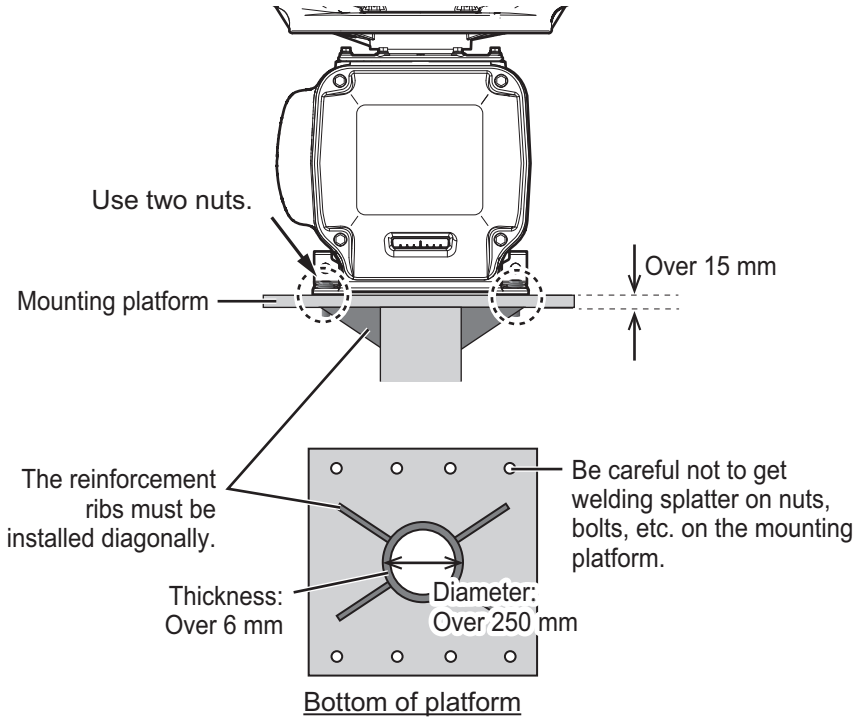

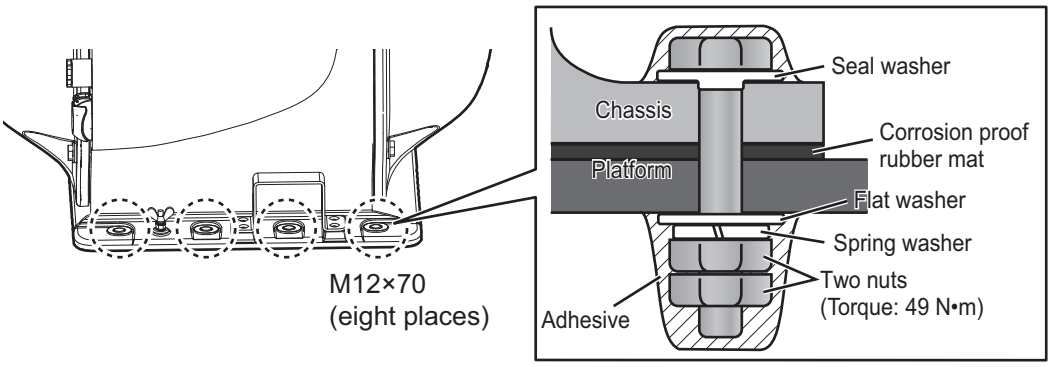

5. Using a hex bolt (M6×25), nut (M6), spring washer (M6) and flat washer (M6), establish the ground system on the mounting platform as shown in the following figure. The location must be within 340 mm of the ground terminal on the Antenna Unit. Connect the ground wire (RW-4747, 340 mm, supplied) between the grounding point and ground terminal on the Antenna Unit. Coat the hardware of the ground system with the supplied adhesive.

Antenna chassis side

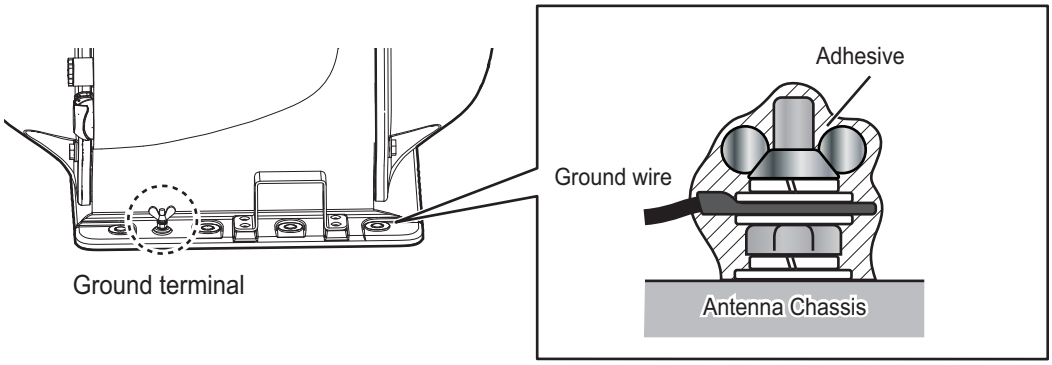

Mounting platform side

Arrange ground terminal as close as possible to Antenna Unit. There are two methods to connect ground wire for mounting platform side.

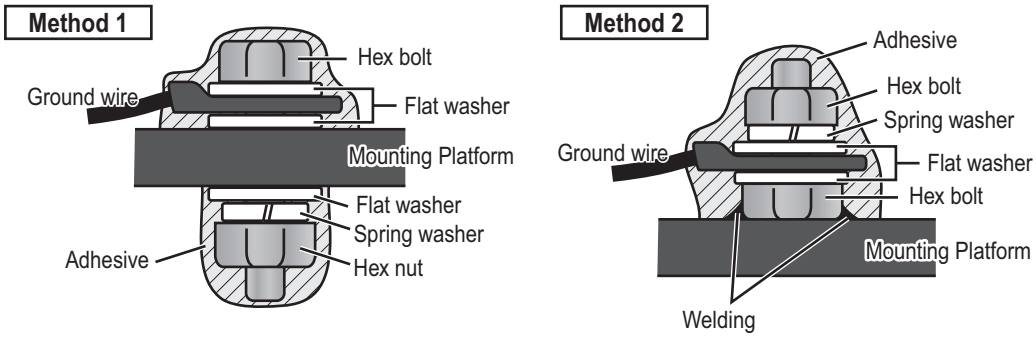

1.3 Monitor Unit

See the operator's manual for MU-190 (OMC-44670), MU-231 (OMC-44690) or MU-270W (OMC-44930) for the installation procedure. Keep in mind the following points when selecting a location.

- Locate the monitor unit where no framing is installed immediately in front of the monitor.
- Locate the monitor where the display is easily visible in all ambient lighting conditions.

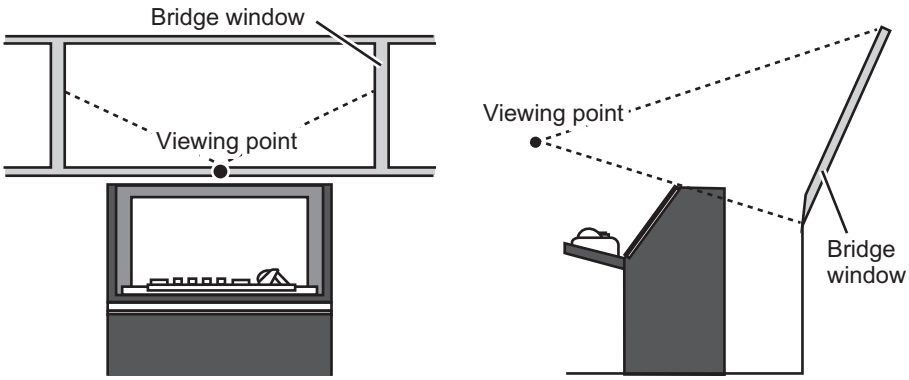

1.4 Control Unit

The Control Units can be installed on a desktop or flush mounted in a console.

Installation considerations

Keep in mind the following points when selecting a location.

- Select a location where the Control Unit can be operated easily.
- Locate the unit away from heat sources because of heat that can build up inside the cabinet.
- Locate the equipment away from places subject to water splash and rain.
- Leave sufficient space at the sides and rear of the unit to facilitate maintenance.
- Determine the location considering the length of the signal cable between the Control Unit and the Processor Unit.
- A magnetic compass will be affected if the Control Unit is placed too close to the magnetic compass. Observe the compass safe distances in the SAFETY INSTRUCTIONS to prevent interference to the compass.

1.4.1 Desktop installation

For desktop installation, the unit can be laid flat or tilted.

How to mount the unit tilted

<RCU-014/015/016>

1. Fit the KB fixing plate (in FP03-09850 for RCU-014, in FP03-09860 for RCU-015/016) to the bottom of the Control Unit.
2. Attach the rubber foots (three for RCU-014, two for RCU-015/016) to the bottom of the Control Unit as shown in the following figure.
3. Install the Control Unit at the desired location with self-tapping screws (local supply).

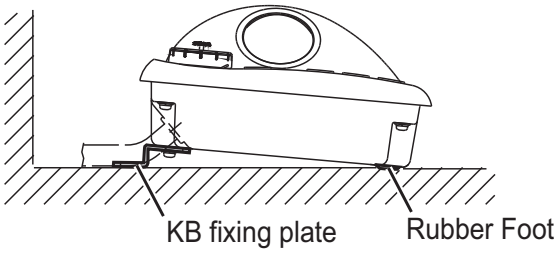

Side view of Control Units

<RCU-031>

The Control Unit can be mounted with the KB fixture, which mounts the unit at an angle.

1. Drill four pilot holes in the mounting location for mounting screws, referring to the outline drawing at the back of this manual.
2. Secure the KB fixture (supplied) to the mounting location, using four self tapping screws (ϕ5×20, supplied).
   Note: Secure the KB fixture so that the cutout is located on the top side.

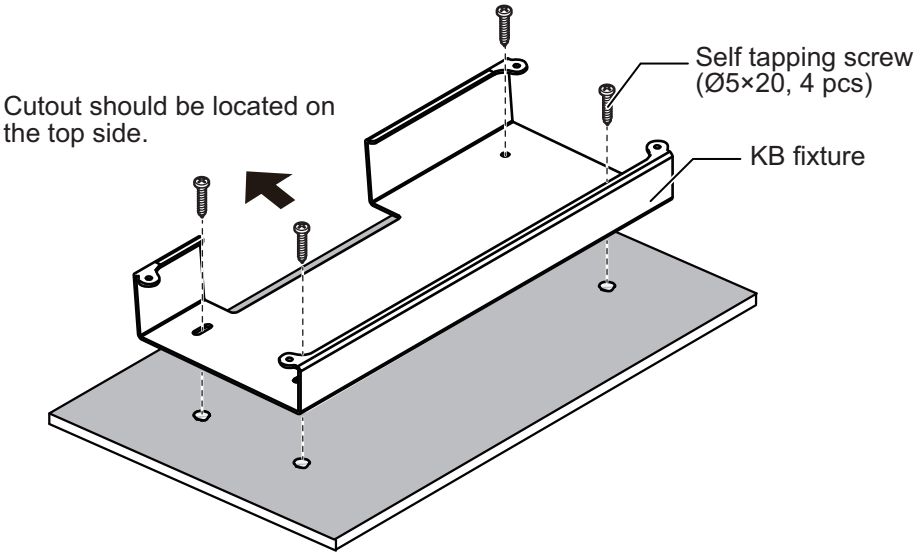

3. Attach a ground wire (IV-1.25sq, supplied locally) to the ground terminal at the bottom of the unit.

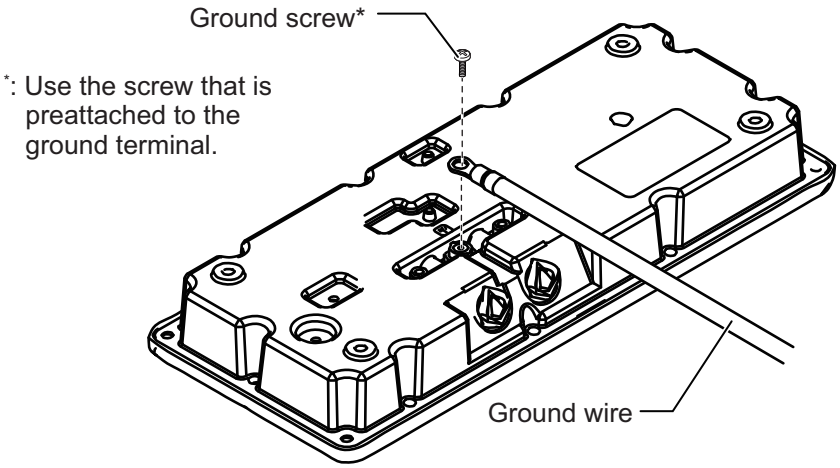

4. Secure the Control Unit the KB fixture, using four binding screws (M5×20, supplied).

5. Attach four bolt hole caps (supplied).

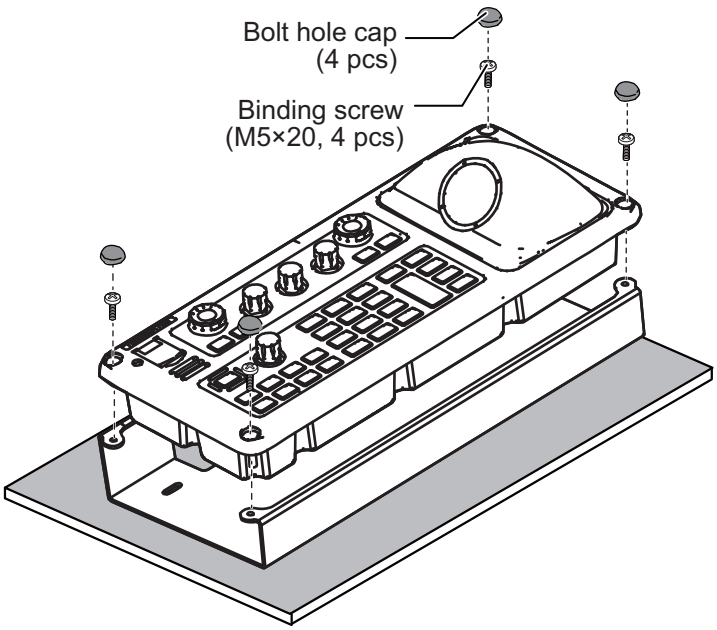

How to mount the unit flush with mounting surface

<RCU-014/015/016>

1. Drill four mounting holes of 5 mm diameter referring to the outline drawing at the back of this manual.
2. Fix the Control Unit with four screws (M4) from the underside of the desktop. (The M4 screws with a sufficient length for the thickness of the desktop should be provided locally.)

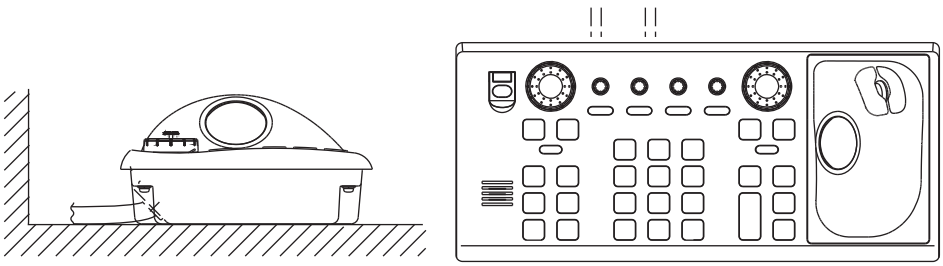

Control Unit RCU-014

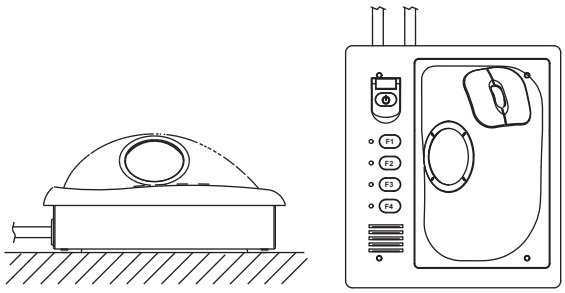

Control Unit RCU-015/RCU-016

<RCU-031>

1. Drill four pilot holes in the mounting location for stud bolts (M4×50), referring to the outline drawing at the back of this manual.
2. Attach a ground wire (IV-1.25sq, supplied locally) to the ground terminal at the bottom of the unit.
3. Insert four stud bolts (M4×20, supplied) to the bolt holes at the bottom of the unit.
   Note: Insert the stud bolts manually. If you insert the stud bolts using a tool, the unit may be damaged.

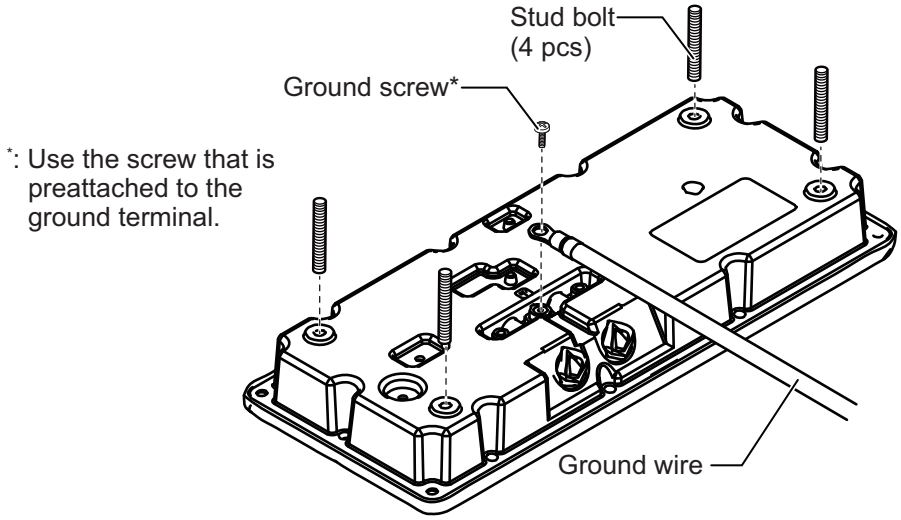
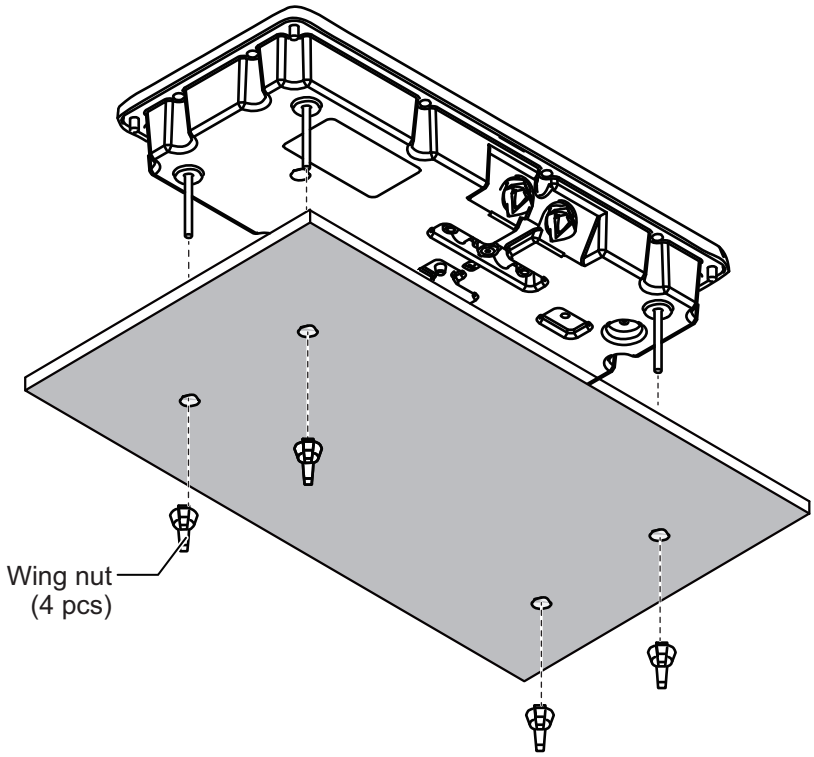
4. Set the unit to the mounting location so that the stud bolts on the bottom of the unit are inserted to the pilot holes.
5. Fasten the four wing nuts (supplied) to the stud bolts from the rear side of the mounting surface.