8) Attach the supplied earth label over the earth label currently attached near the grounding terminal.

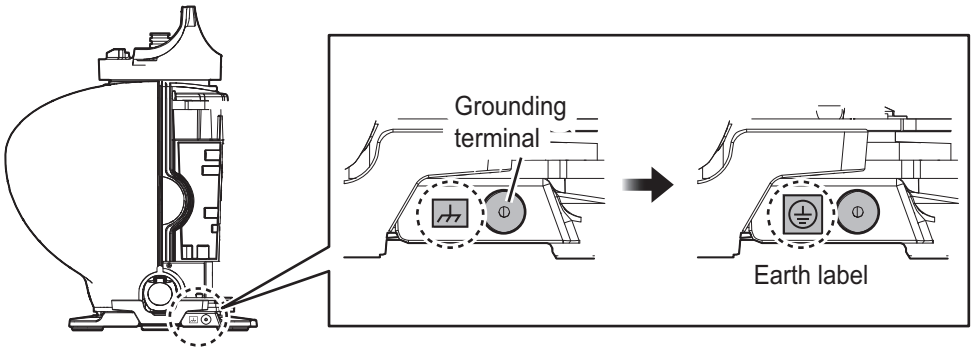


10. Position the cables so their armors lie beneath their respective cable clamps in the cable entrance. Fasten the cable clamps.

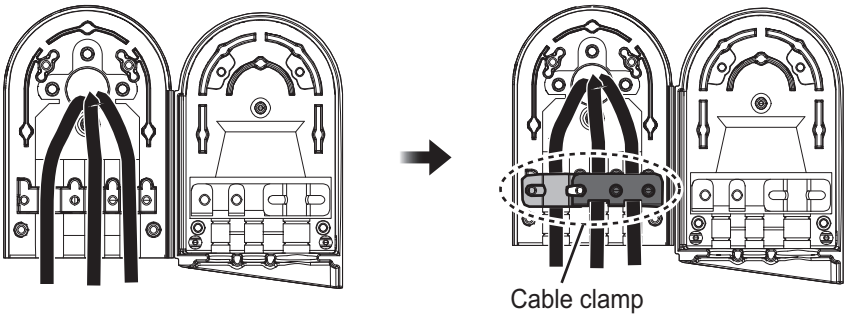


11. Coat the hinge with the supplied adhesive for hinge waterproof then close the cable entrance cover. Fix the cable cover with four screws, then coat the screws with the supplied adhesive.

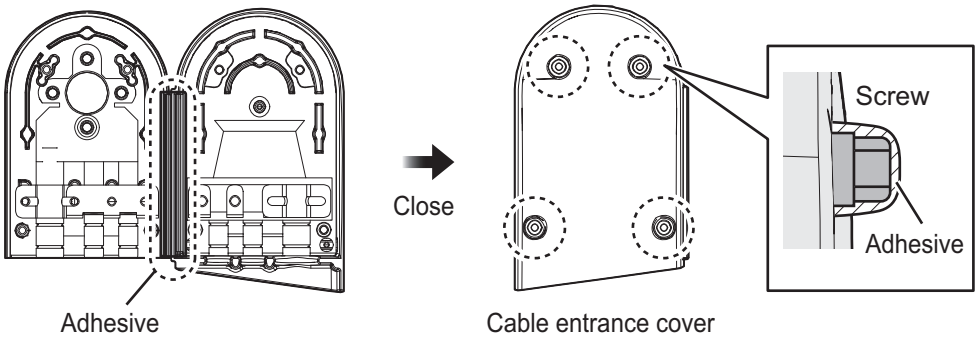


12. Reconnect the performance monitor connector (J807) to the rear cover.

13. **Check that the gasket on the front and rear covers is seated properly**, then close the covers. The torque for the fixing bolts must be 10.0 N•m.

    **Note 1:** If it is necessary to open the front cover after installing the de-icer kit, remove the de-icer power cable from the locking wire saddle as shown in the following figure, then detach the cover slowly to prevent damage to the heater element.

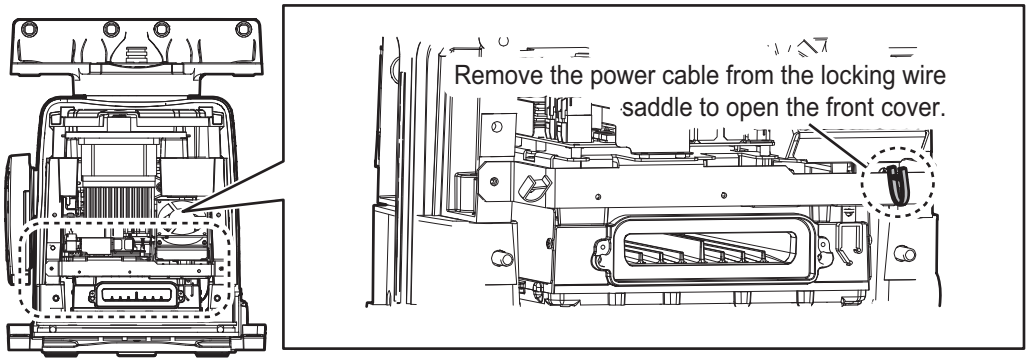


**Note 2:** For the de-icer, take care not to hit the heater elements on the chassis or radiator. If the heater hits something, unfasten the fixing screws for the heater to adjust the position of the heater. Then fix the heater again.

## 2.2.3 How to connect the cables for X-band radar (TR-UP, FAR-2x58 radars)

Some parts or wiring have been omitted from the illustrations for clarity.

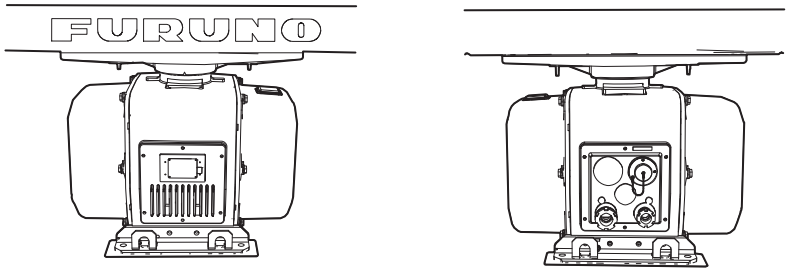


**Front**
(Nameplate side)

**Rear**
(Cable entry side)

1. Loosen 12 bolts from both covers to remove the covers.

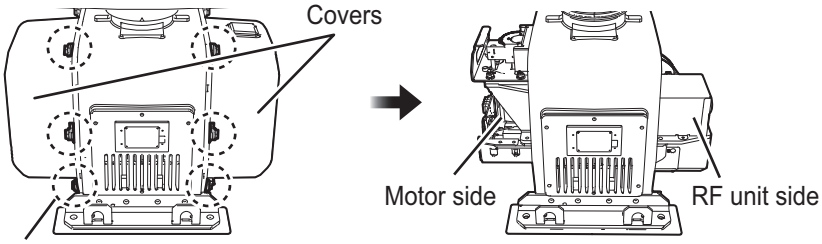


12 places on both covers.

**Note 1:** If the performance monitor is installed, the cable for the performance monitor is connected between the cover for the RF unit side and the RF-TB Board in the Antenna Unit. Open the cover slowly to prevent damage to the cable and connector.

**Note 2:** Both covers have the safety chains to prevent falling covers.

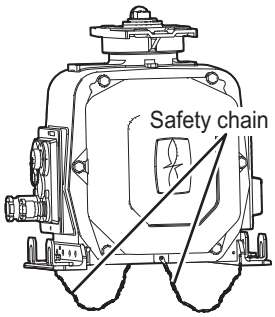


2. Disconnect the motor drive connectors (J917, J918) and the BP connector (J911) from the RF-TB Board. If the performance monitor is installed, disconnect the performance monitor connector (J916).

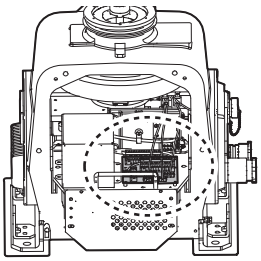

**RF unit side**

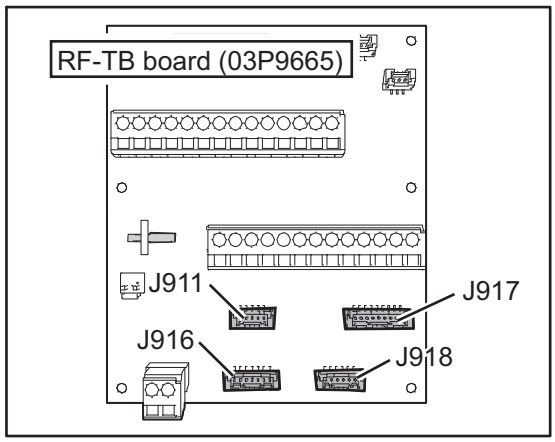


3. Unfasten the two bolts circled in the figure below to enable removal of the RF unit. Then, pull RF unit to remove it with the handle. To move the RF unit, use two handles on the RF unit.

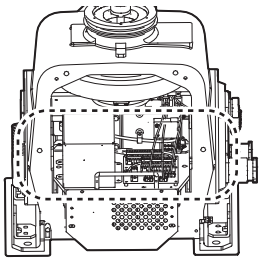

**RF unit side**

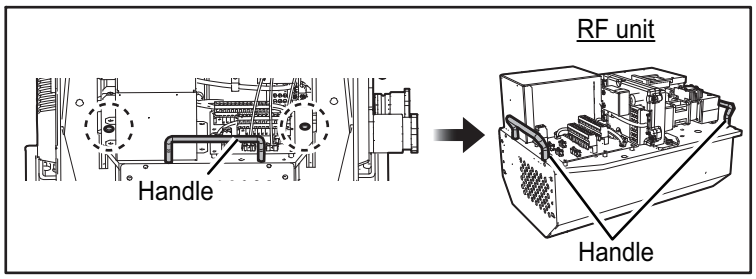


**Note:** The magnetron in the transceiver module will demagnetize if it contacts ferrous material. When dismounting the transceiver module, lay it on its side or on top of non-ferrous material as shown in the figure to the right.

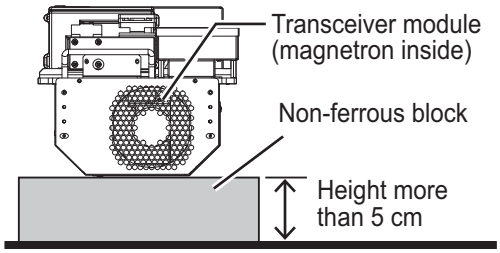

4. Unfasten the cable glands for the antenna and power cables on the rear side and remove the gasket, three flat washers and remove the protector of each entrance.

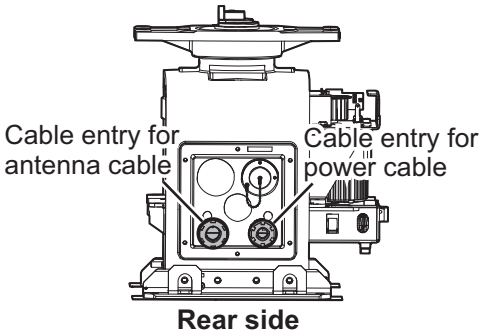


5. Slide the flat washers and gasket onto the cables as shown in the figure below.

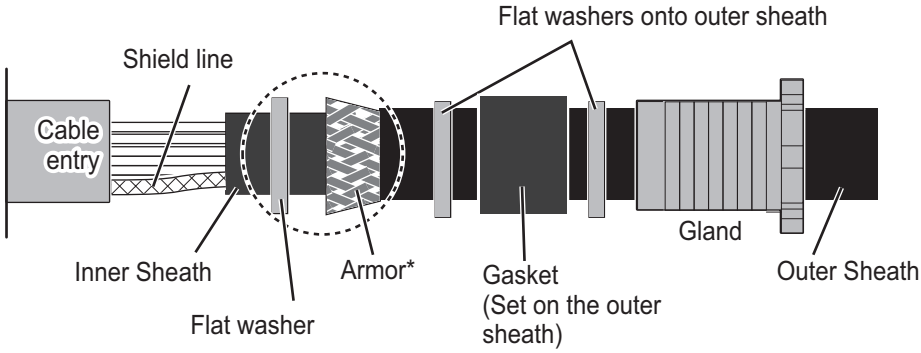


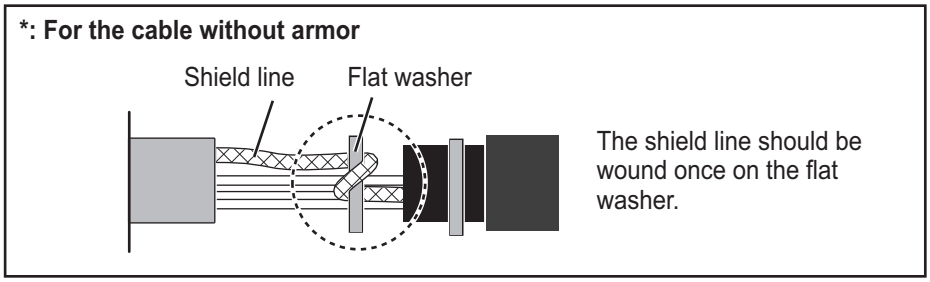


6. Push the flat washer against the armor then sandwich in the armor between two flat washers.
7. Trim the armor so that it does not extend past the flat washers.
8. Pass the antenna and power cables through each cable entrance and attach the appropriate connectors to the appropriate cables. For how to connect the cables to WAGO connector, see "WAGO connector" on page 2-6. For pin arrangement, see the interconnection diagram at the back of this manual.
   **Note:** A terminal opener is provided on the RF-TB Board.

   **Motor power cable**

   1) Pass the motor power cable as follows:

2) Connect the wires of the motor power cable to the Terminal board TB901 on the front side through the appropriate wiring clamps, according to wiring sticker.

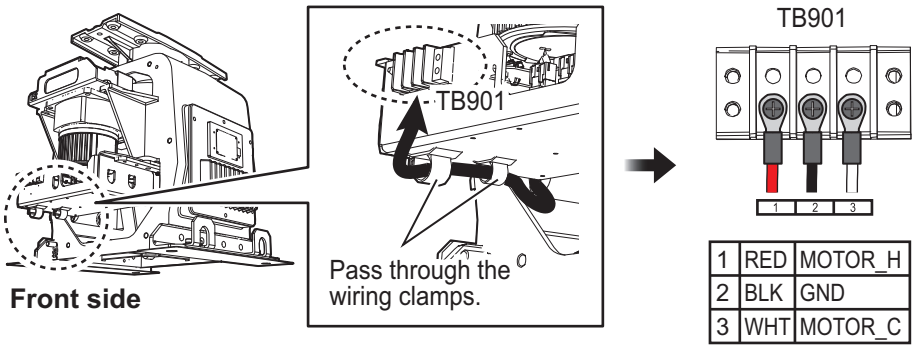


| | | |
|---|---|---|
| 1 | RED | MOTOR_H |
| 2 | BLK | GND |
| 3 | WHT | MOTOR_C |

## Antenna cable

1) Pass the antenna cable as follows:

2) Connect the wires of the antenna cable to the appropriate WAGO connectors (pre-attached on the RF-TB board).
**Coaxial cable**: TB902 on the TNC Junction Box, passing **over** the slide rail.
**Signal lines**: TB801, TB802 and TB803, passing **over** the slide rail.
**Shield lines**: Wing bolt, passing **under** the slide rail.

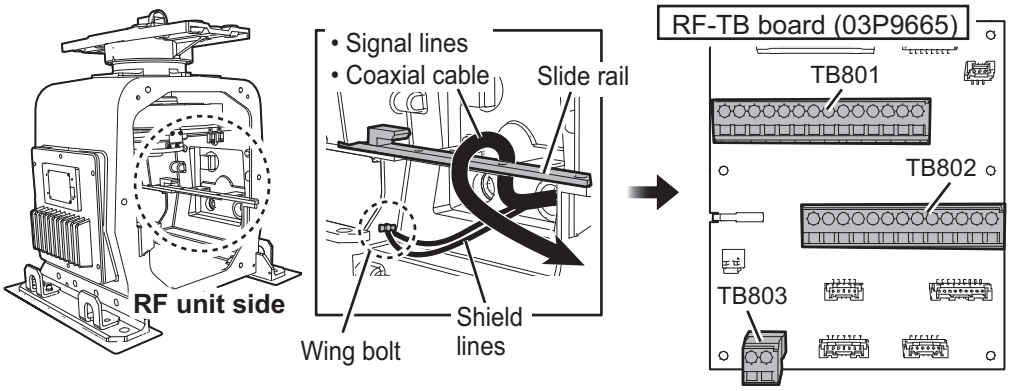


3) Remove the TNC junction box from the RF unit and then connect the coaxial cable of the antenna cable to the BNC case.

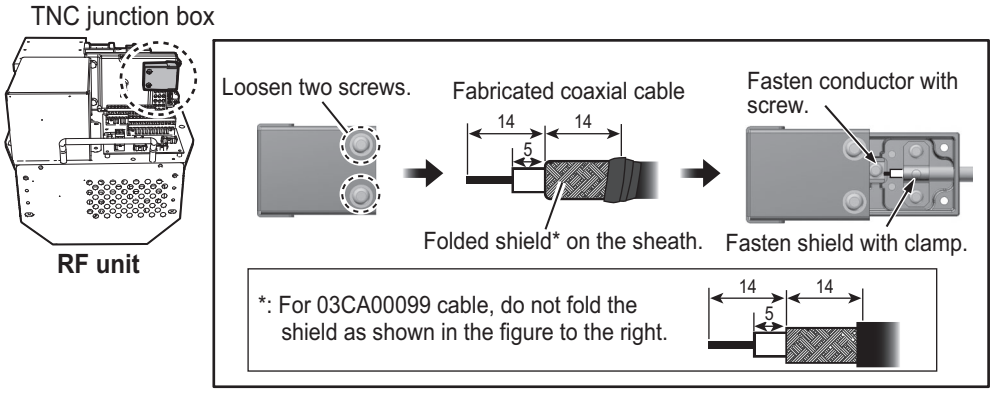


4) Re-mount the TNC junction box to the RF unit.

9. Apply the supplied adhesive to the threads of the cable glands, and then fasten it tightly with the hook spanner.
   **Note:** Use the wrench of the correct size referring to cable gland size below. If you do not have the hook spanner, contact your dealer.
   - Gland for the antenna cable: ϕ50
   - Gland for the motor cable: ϕ42
10. Re-mount the RF unit then reconnect the motor drive connectors (J917, J918) and the BP connector (J911) to the RF-TB Board, referring to step 2 on page 2-17.
    **Note:** When mounting the RF unit, take care not to pinch the power cable with the RF unit. The power cable can be damaged.
11. If required, reconnect the performance monitor connector (J916).
12. **Check that the gasket on both covers are seated properly**, then close the covers. The torque for the fixing bolts must be 28.0 N•m.

# 2.3 Antenna Unit for X-band, TR-DOWN Radar

## 2.3.1 How to fabricate the cables

Three cables are connected to the Antenna Unit: the serial cable from the transceiver unit, waveguide, and de-icer power cable (option).

For how to connect the WAGO connector, see "WAGO connector" on page 2-6.

**TTYCYSLA-10 (for serial cable)**

Clamp the armor with the cable clamp.

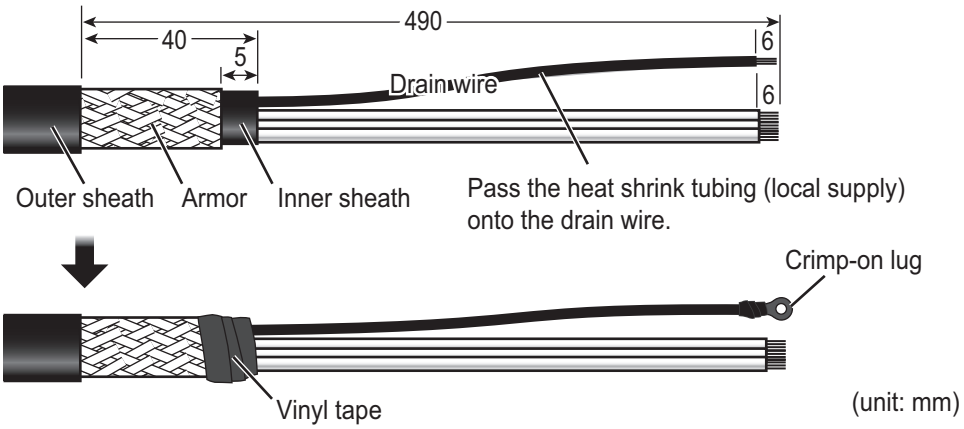


**DPYCY-1.5 (for the optional de-icer)**

- Before beginning any work on the Antenna Unit, turn off the breaker for the de-icer at the mains switchboard. (Turning off the display unit has no effect.)
- The neck of the Antenna Unit becomes VERY HOT when the de-icer is working. (The de-icer turns on when ambient temperature goes down to 5°C and heats to 55°C.)

Clamp the armor with the cable clamp.

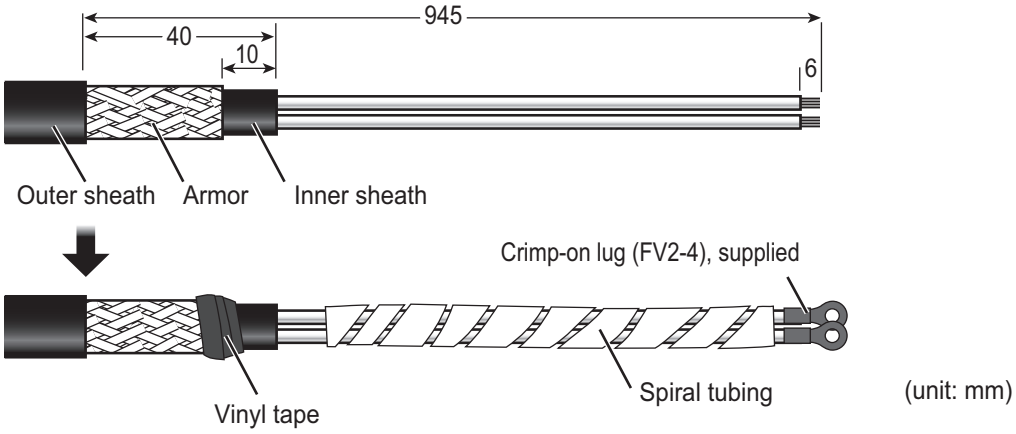


**Flexible waveguide**

The connector at the antenna side is pre-attached to the flexible waveguide. The bending radius shown below must be observed to prevent damage to the waveguide.

Bending radius→ E-bend: 200 mm, H-bend: 400 mm

## 2.3.2 How to connect the cables for X-band (TR-DOWN) radar

1. Unfasten four bolts from the rear cover to remove the rear cover. If the de-icer is already installed or will be installed, remove two bolts inside the antenna to remove the front cover.

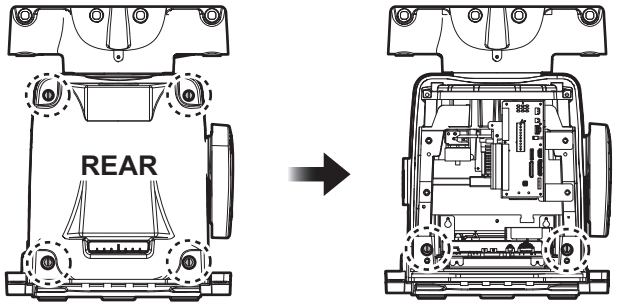


For de-icer installation

**Note 1:** The cable for the performance monitor is connected between the rear cover and the RF-TB Board in the Antenna Unit. Open the cover slowly to prevent damage to the cable and connector.

**Note 2:** If the de-icer is to be installed, spread open the right and left heater elements on the cover, then remove the front cover, being careful not to hit the elements on the radiator or chassis.

2. Disconnect the performance monitor connector (J807) from the RF-TB Board.

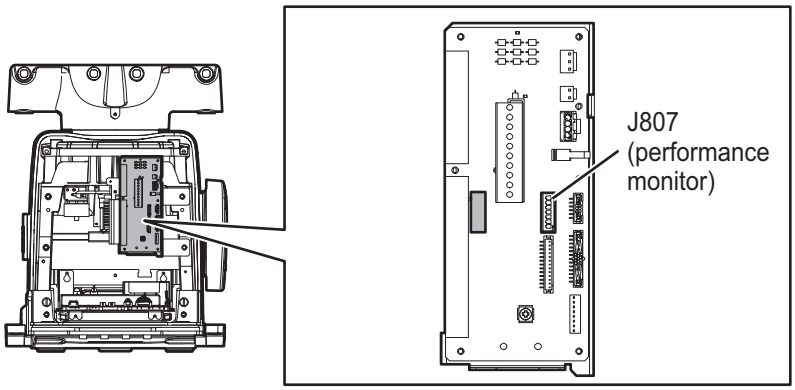


3. Unfasten four screws to open the cable entrance cover.

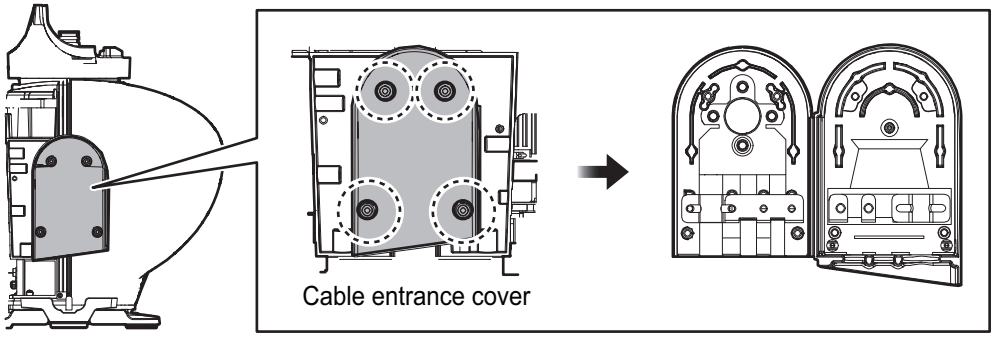


**Note:** The orientation of the cable entrance can be changed. See "How to change the orientation" on page 2-11.

4. Unfasten the two screws fixing the cable clamp for the serial cable, then pass the serial cable (TTYCYSLA-10) through the cable entrance.

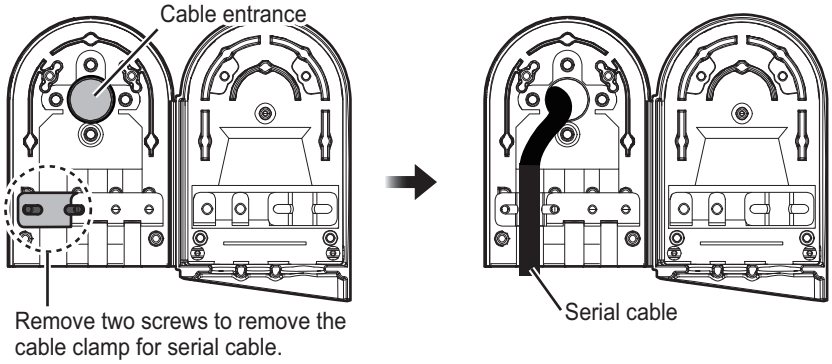

If applicable, unfasten the two screws fixing the cable clamp for the de-icer power cable, then pass the cables through the cable entrance.

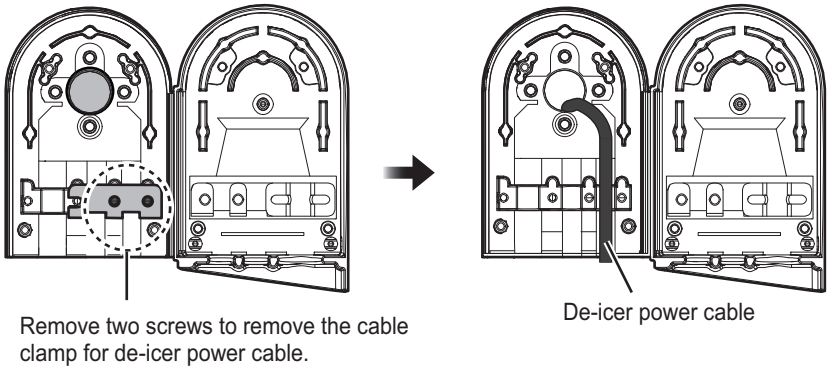


**Note 1:** The dummy plug is provided to insert into the unused cable slot. Insert the plug for waterproofing.

**Note 2:** The sub monitor cable is connected to the transceiver unit. See section 2.7.2.

5. Pass the serial cable through the cable entrance and locking wire saddle.
   **Note:** Make sure to pass the cable through the specified locking wire saddle.

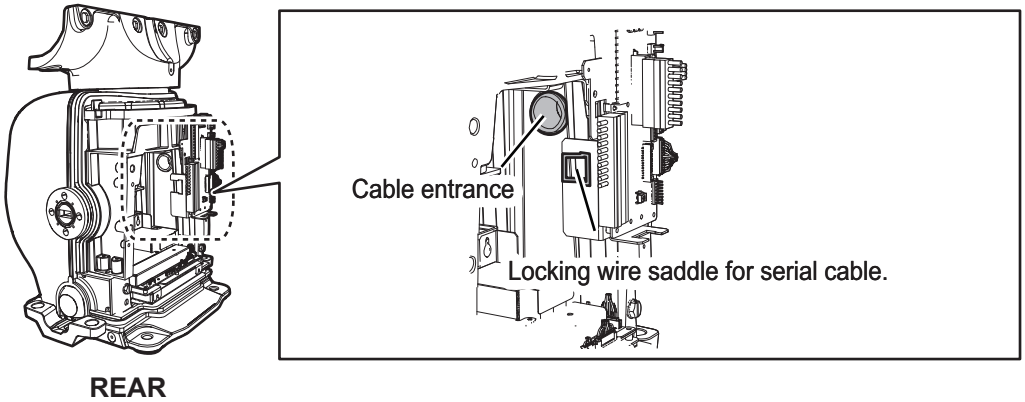


6. Attach the appropriate WAGO connectors (pre-attached) to the serial cable, and then connect the serial cable to the RF-TB Board as shown in the following figure. For how to connect the WAGO connector, see "WAGO connector" on page 2-6. For pin arrangement, see the interconnection diagram at the back of this manual.
   **Note:** A terminal opener is provided on the RF-TB Board.
   Destination of serial cable
   **Serial line**: TB802 (8-pin) and TB803 (16-pin)

**Shield (drain wire)**: Screw (A)

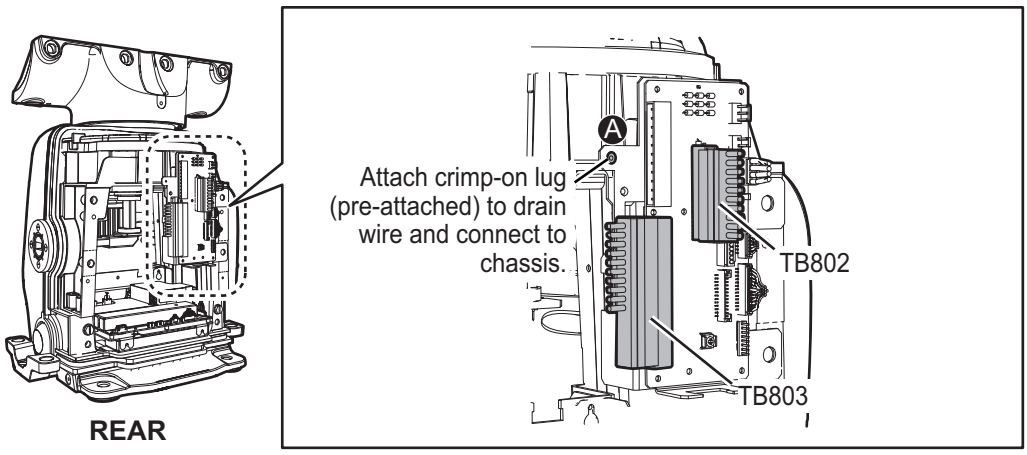


7. **DE-ICER INSTALLATION**. See also “De-icer Kit Installation Instructions” (for TR-DOWN radar, C32-01406), issued separately, for the de-icer not fitted at the factory. If the de-icer is not provided, go to step 8.

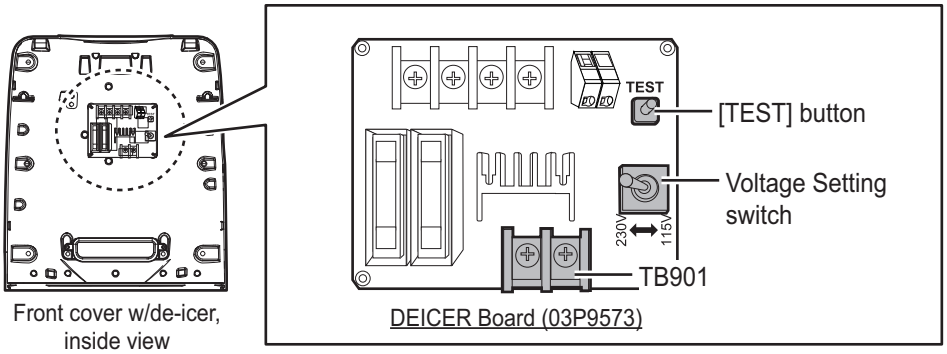


1) Set a locking wire saddle (supplied) at locations (B) and (C) shown in the following figure. Pass the de-icer power cable through the locking wire saddles (A) through (C) and pull it to the front side.

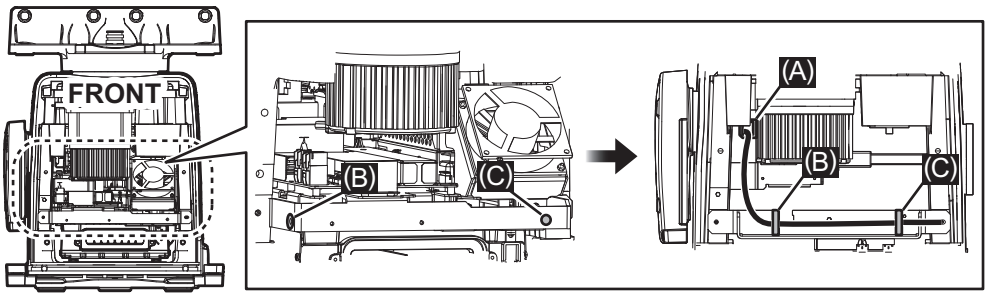


2) Unfasten the cable band* on the front cover. Pass the de-icer power cable through the band then fasten the band. Connect the cable to TB901 on the DE-ICER board (03P9573), using the supplied crimp-on lugs.

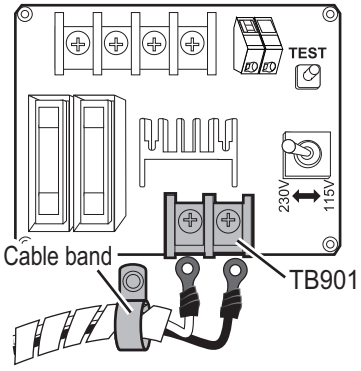


*: For the DE-ICER installation kit, unfasten the cable band on the supplied cover. (The original cover can be discarded.)

3) Set the Voltage Setting switch according to the power source for the de-icer; 115 V or 230 V. The default setting is 230 V.

4) Apply power to the de-icer then press and hold the **TEST** button for about ten seconds. Check that the heater gets hot and then release the **TEST** button.

5) Coat the gasket (all brims) of the intake with the supplied oil compound. Be sure to coat the gasket completely.

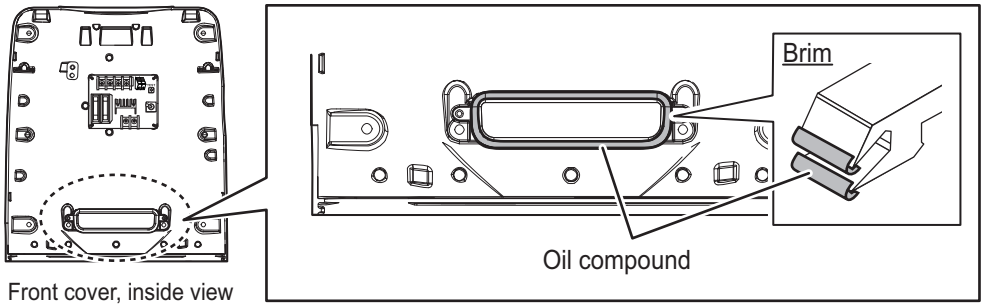


6) Set the front cover to the Antenna Unit. Take care not to hit the heater elements on the chassis or radiator.

7) Fasten the base of the heater as shown in the following figure, using the supplied installation materials.

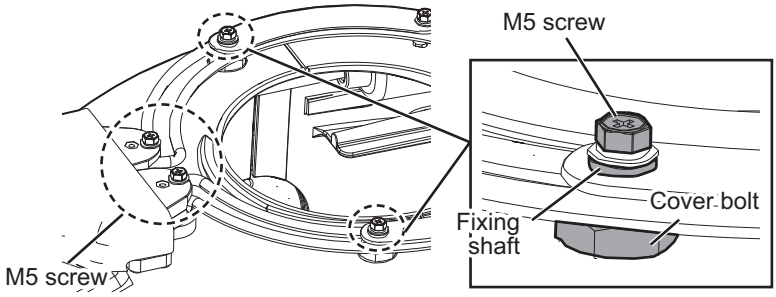


8) Attach the supplied earth label over the earth label currently attached near the grounding terminal.

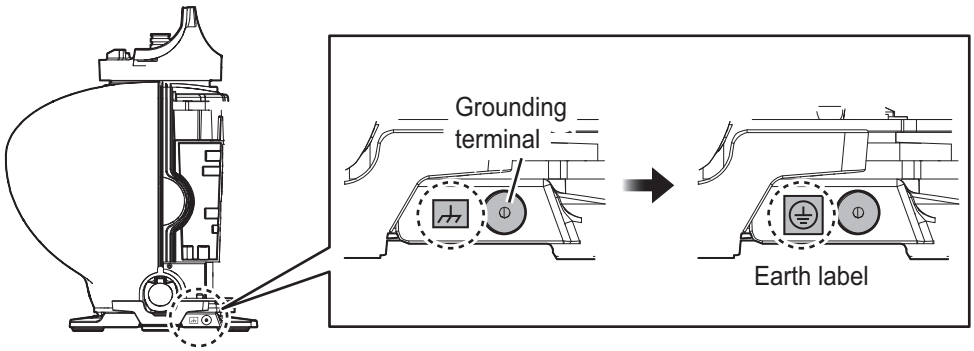

8. Position the cables so their armors lie beneath their respective cable clamps in the cable entrance. Fasten the cable clamps.

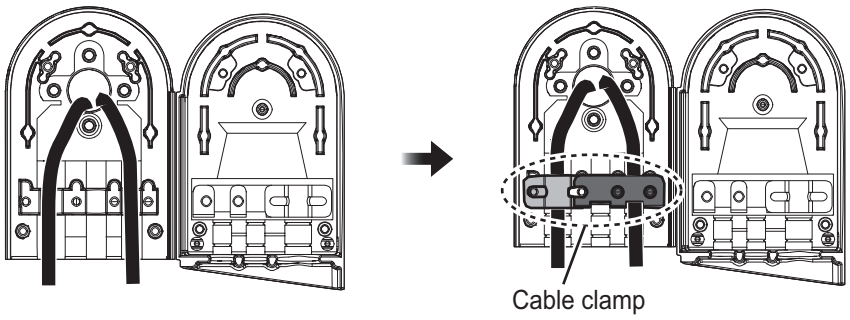


9. Coat the hinge with the supplied adhesive for hinge waterproof then close the cable entrance cover. Fix the cable cover with four screws, then coat the screws with the supplied adhesive.

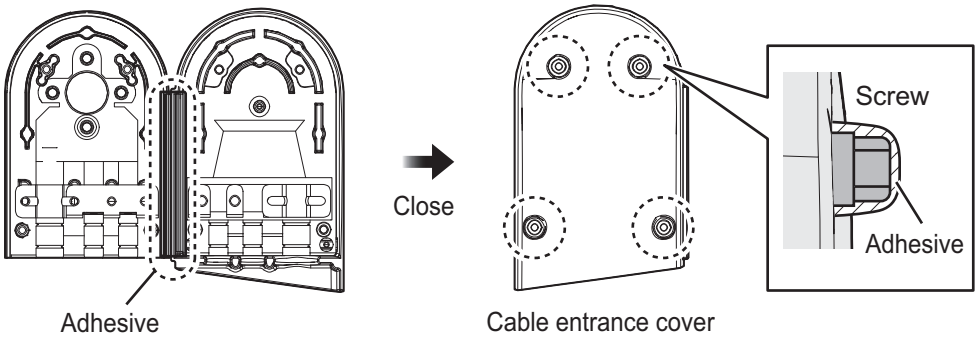


10. Reconnect the performance monitor connector (J807) to the RF-TB Board.
11. Connect the waveguide to the antenna with either an E-bend or H-bend waveguide. See the supplied instruction manual (C32-01903) in Antenna Unit for details.
    1) Wipe the surface of the waveguide flange with a clean, dry cloth to remove any foreign material.
    2) Grease the O-ring and set it in its groove on the Antenna Unit.
    3) Evenly coat the waveguide flange for the Antenna Unit side with supplied adhesive.
       **Note:** Apply an even coat of the supplied adhesive to the waveguide flange. It should leak out slightly when the fixing bolts are tightened. Be sure no adhesive contacts the choke groove and waveguide.

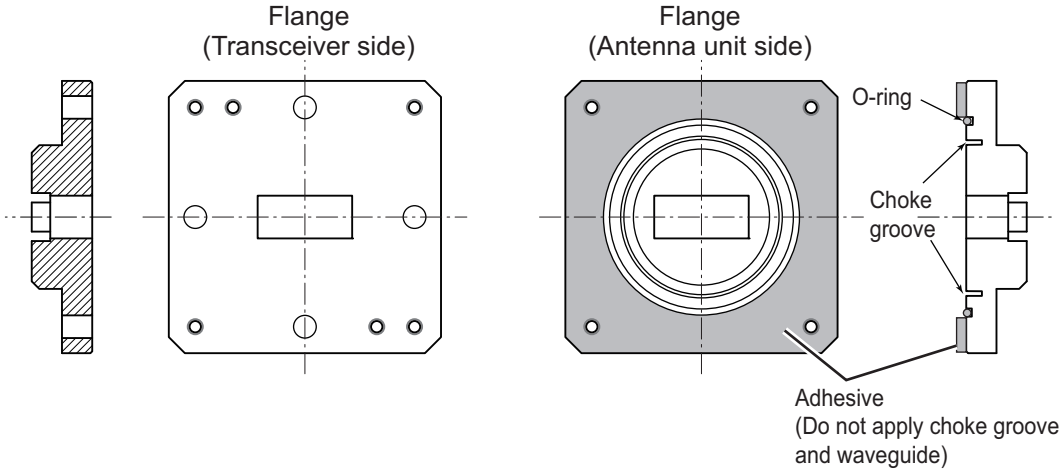

4) Connect the waveguide flange and then fix with the bolt.
**Note 1:** If it is necessary to open the front cover after installing the de-icer kit, remove the de-icer power cable from the locking wire saddle shown in the following figure then detach the cover slowly to prevent damage to the heater element.

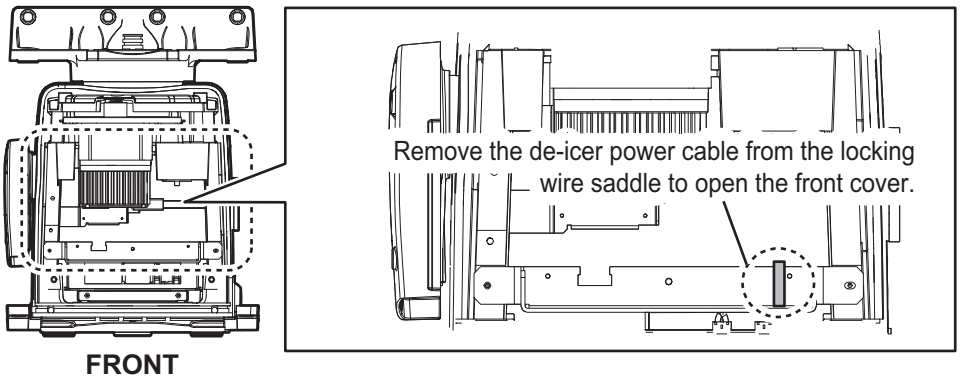


**Note 2:** For the de-icer, take care not to hit the heater elements on the chassis or radiator. If the heater hits something, unfasten the fixing screws for the heater to adjust the position of the heater. Then fix the heater again.

5) Wipe out the excess adhesive of the flange.

12. **Check that the gasket on the front and rear covers is seated properly**, then close the covers. The torque for the fixing bolts must be 10.0 N•m.

# 2.4 Antenna Unit for S-band, TR-UP Radar

## 2.4.1 How to fabricate the cables

For how to connect the LAN modular plug, see "LAN cable" on page 2-5. For how to connect the WAGO connector, see "WAGO connector" on page 2-6.

**RW-00135**

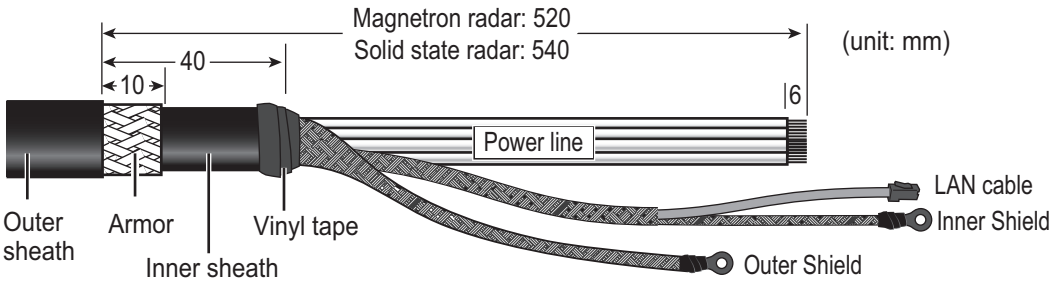


**RW-9600/6895 (for retrofit)**

To use the existing cable (RW-9600/6895) for the retrofit, two optional kits are required. For the LAN Coaxial Converter, see section 2.10 "LAN Signal Converter" for details.

- LAN Signal Converter: Type: OP03-247-2 (for Magnetron radar)
  Type: OP03-247-1 (for solid state radar)
- Retrofit Cable Kit: Type: OP03-255-1

**Note:** The maximum antenna cable length is 100 m for RW-9600, 50 m for RW-6895. If the existing antenna cable is longer than the above maximum length, replace the antenna cable with RW-00135.

For cable fabrications and wiring, see the installation manuals in the optional kits.

The unused power lines are tied up and attached to the crimp-on lug FV5.5-S4 (LF), supplied locally. Connect these unused lines to the ground terminal with the shield line. See the interconnection diagram at the back of this manual for details.

**S03-92-15/30/40/50 (RW-00136 + connector, for a sub monitor)**

**Note:** The maximum cable length is 50 m.

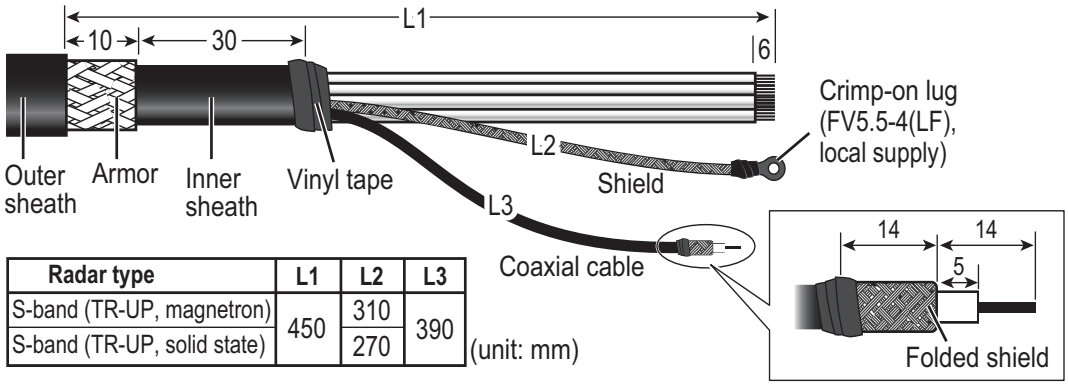


| Radar type | L1 | L2 | L3 |
|---|---|---|---|
| S-band (TR-UP, magnetron) | 450 | 310 | 390 |
| S-band (TR-UP, solid state) | | 270 | |

(unit: mm)

**DPYCY-1.5 (for the optional de-icer)**

- Before beginning any work on the Antenna Unit, turn off the breaker for the de-icer at the mains switchboard. (Turning off the display unit has no effect.)
- The neck of the Antenna Unit becomes VERY HOT when the de-icer is working. (The de-icer turns on when ambient temperature goes down to 5°C and heats to 55°C.)

Wrap the spiral tubing near the crimp-on lugs.

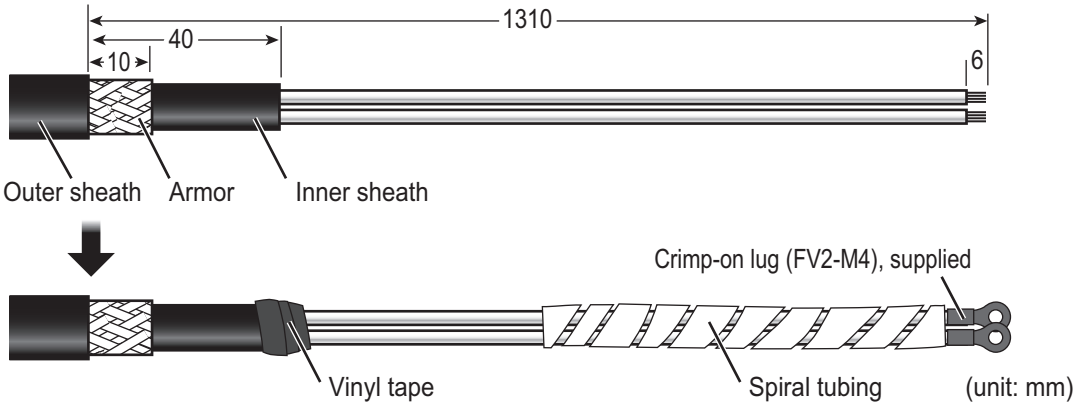


## 2.4.2 How to connect the cables for S-band (TR-UP, magnetron) radar

Three cables are connected to the Antenna Unit: anttena, sub monitor* and de-icer* power cables (*: option). The procedure shows how to connect all cables. Disregard the descriptions for the optional equipment if not applicable.

**Note:** Apply the supplied adhesive to the unused cable glands.

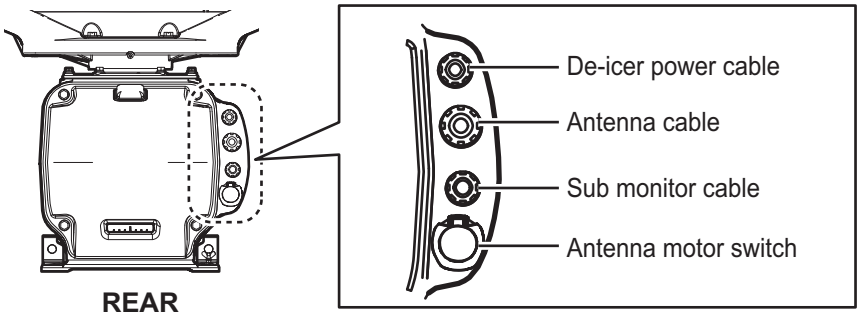


## NOTICE

If there is a chance of inclement weather when the RF unit is removed, cover the intakes on both covers with packing tape for waterproofing. Be sure to remove the tape after completing the installation.

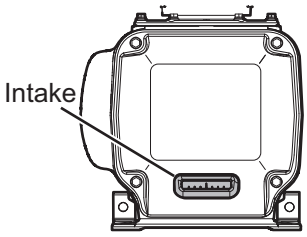


Some parts or wiring have been omitted from the illustrations for clarity.

1. Loosen four bolts on the rear cover to remove the rear cover. If the de-icer is already installed or will be installed, remove also four bolts on the front cover to remove the front cover.

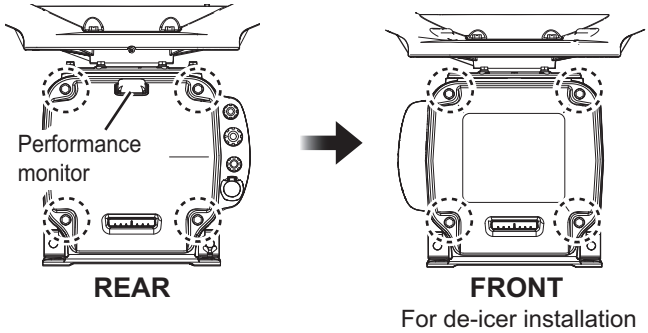


**Note:** The cable for the performance monitor is connected between the rear cover and the RF-TB Board in the Antenna Unit. Open the cover slowly to prevent damage to the cable and connector.

2. Disconnect the performance monitor connector (J807) and the motor drive connectors (J803, J804 and J808) from the RF-TB Board.

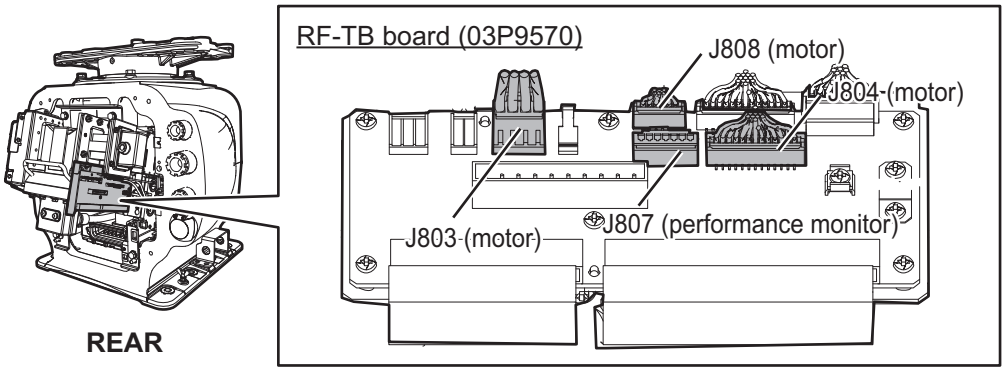

3. Disconnect the coaxial cable and unfasten four bolts to enable removal of the RF unit.

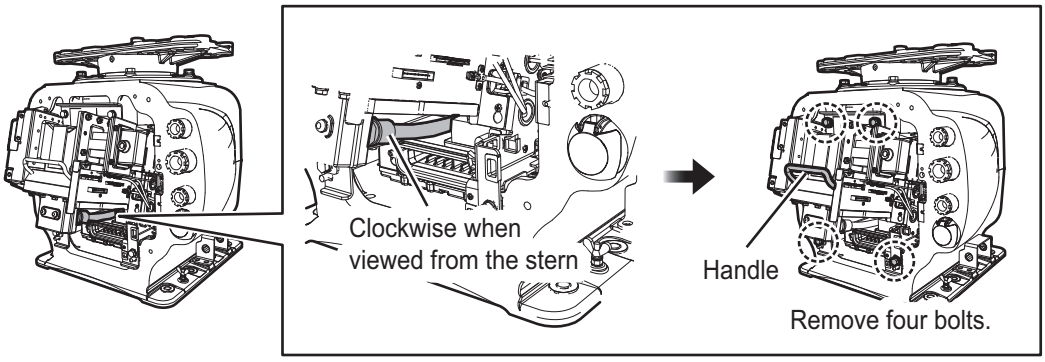


4. Remove the RF unit with the handle.
   **Note:** Lay the unit on its side or on top of non-ferrous material, to prevent demagnetization.
5. Unfasten the cable gland for the antenna cable and remove the gasket and three flat washers and remove the protector.

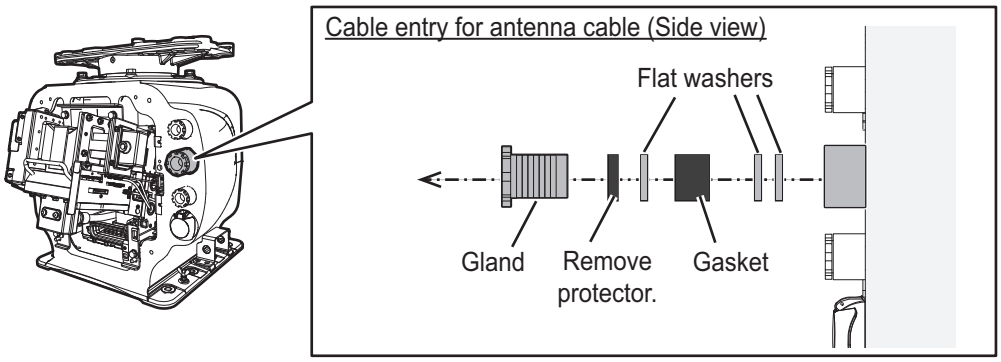


6. Slide the cable gland, the gasket and three flat washers onto the cable.
7. Push the flat washer against the armor.
8. Trim the armor so that it does not extend past the flat washers.

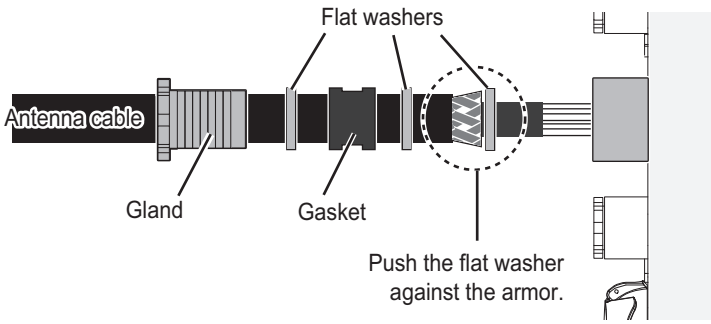


9. Pass the antenna cable through the cable entrance.
   If applicable, unfasten the appropriate cable glands and pass the sub monitor and de-icer power cables through the cable entrance. Pass the cables through their respective locking wire saddle.
10. All other cables are connected to the RF unit and should be pulled out of the chassis after passing them through their respective cable entrances. The de-icer power cable is connected to the de-icer board as shown in step 14.
11. Apply the supplied adhesive to the threads of the cable glands, and then fasten it tightly with the hook spanner.
    **Note:** Use the wrench of the correct size referring to cable gland size below. If you do not have the hook spanner, contact your dealer.
    - Gland for the antenna cable: $\phi$42
    - Gland for the sub monitor cable or de-icer cable: $\phi$34

12. Re-mount the RF unit then reconnect the connectors for the motor (J803, J804 and J808), the four bolts and the coaxial cable (see step 3). The torque for fixing the coaxial cable must be 27.5 N•m.
13. Attach the appropriate WAGO connectors (pre-attached) to the appropriate cables, and then connect the antenna and sub monitor cables to the RF-TB Board shown in the following figure. For how to connect the WAGO connector, see "WAGO connector" on page 2-6. For pin arrangement, see the interconnection diagram at the back of this manual.

    **Note 1:** Make sure to pass the cable through the specified locking wire saddle.

    **Note 2:** A terminal opener is provided on the RF-TB Board.

    - Destination of Antenna cable:

      **Power line**: TB801 through the locking wire saddle (A)
      **LAN cable**: J821 through the locking wire saddles (B, two places)
      **Shield of power line**: Screw (C)
      **Shield of LAN cable**: Screw (D)

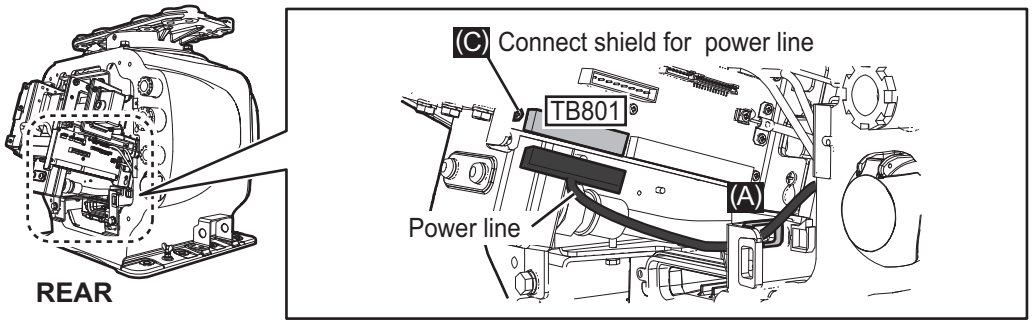


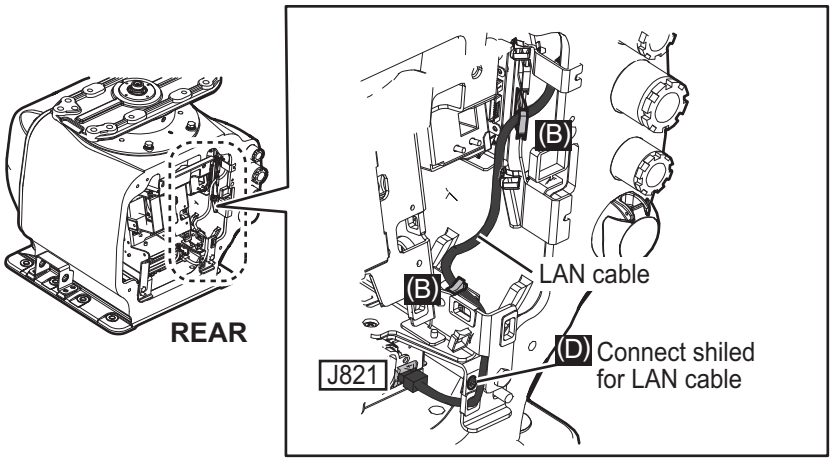


**Note:** For the antenna cable RW-9600/6895/4873, connect the crimp-on lug (that binds unused wires) together with the shield of the power line.

- Destination of sub monitor cable

  **Note:** Remove (or Loosen) four bolts as shown in the following figure to remove the RF-TB Board from the RF unit.

  **Signal line**: TB803 through the locking wire saddle (A), see the figure for the "Destination of Antenna cable:"
  **Coaxial cable**: TB804 (B)
  **Shield of signal line**: Screw (C)

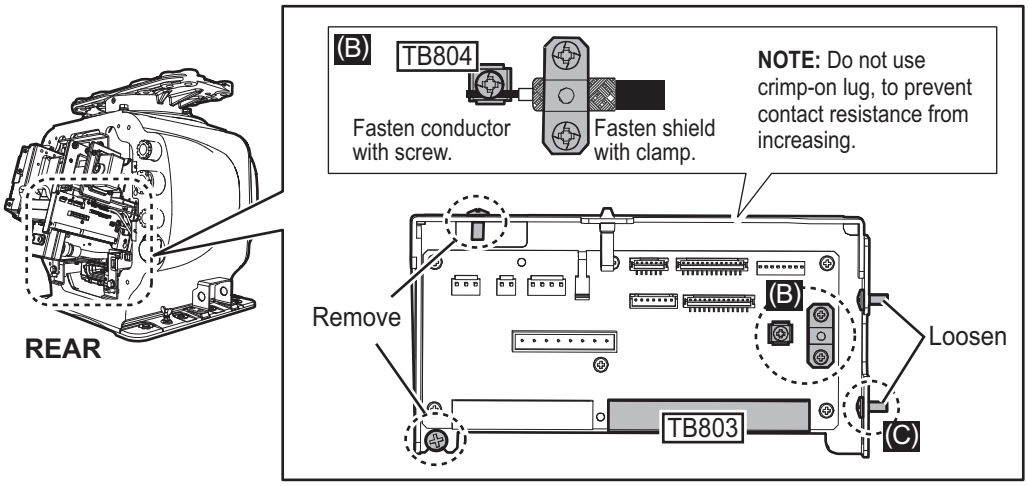


14. **DE-ICER INSTALLATION.** See “De-icer Kit Installation Instructions” (for TR-UP radar, C32-01313), issued separately, for the de-icer not fitted at the factory. If the de-icer is not provided, go to step 12.

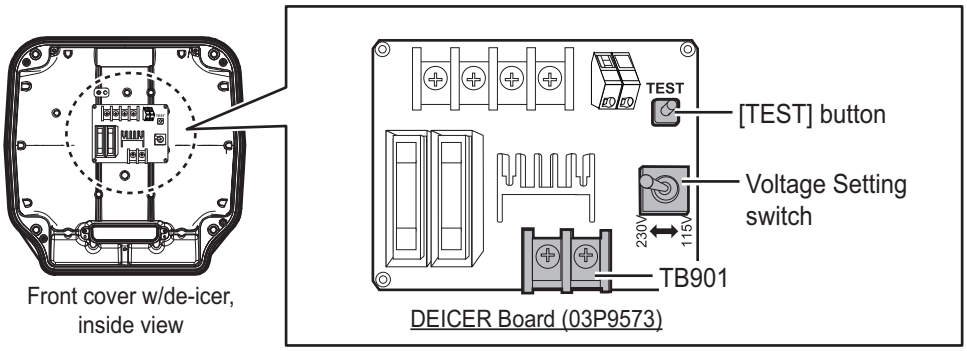


1) Remove four bolts then spread open the right and left heater elements on the front cover.
   **Note:** Lift the elements slightly when opening so as not hit the elements on the bolts on the chassis.

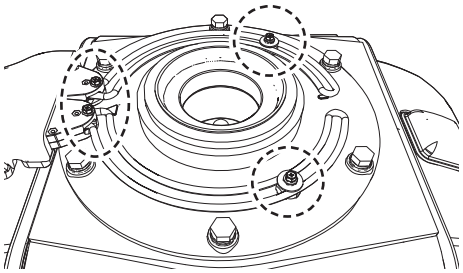

2) Unfasten four bolts to open the front cover. Remove the cover, being careful not to hit the elements on the chassis or radiator.
3) Remove the RF unit then pass the de-icer power cable from the cable entrance.
4) Wrap the supplied spiral tube around the de-icer power cable, starting from the crimp-on lugs. Set a locking wire saddle (supplied) at location (6) shown

in the following figure. Pass the de-icer power cable through the locking wire saddles (1) to (6) and it to the front side.

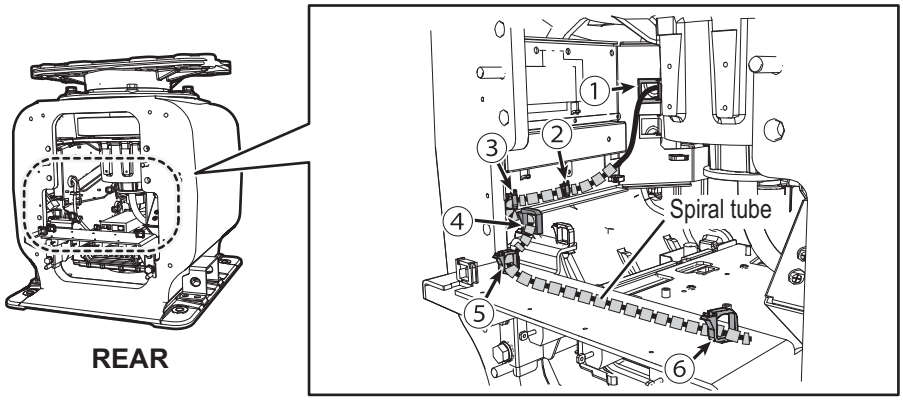


5) Unfasten the cable band* on the front cover. Pass the de-icer power cable through the band then fasten the band. Connect the cable to TB901 on the DE-ICER board (03P9573), using the supplied crimp-on lugs.

*: For the DE-ICER installation kit, unfasten the cable band on the cover supplied with the kit. (The original cover can be discarded.)

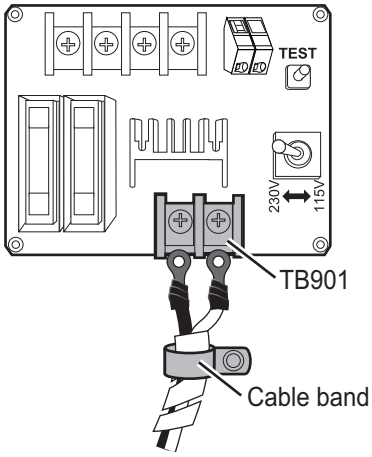


6) Set the Voltage Setting switch according to the power source for the de-icer; 115 V or 230 V. The default setting is 230 V.

7) Apply power to the de-icer then press and hold the **TEST** button for about ten seconds. Check that the heater gets hot and then release the **TEST** button.

8) Set the front cover with heater to the Antenna Unit. When fastening the front cover, spread open the heater elements, lifting the base of the heater. Take care not to hit the heater elements on the chassis or radiator.

9) Fasten the two heater elements to the chassis with removed four bolts at step 1). Fasten the base of the heater with two bolts coated with the supplied adhesive. Fasten the installation materials to each of the cover bolts.

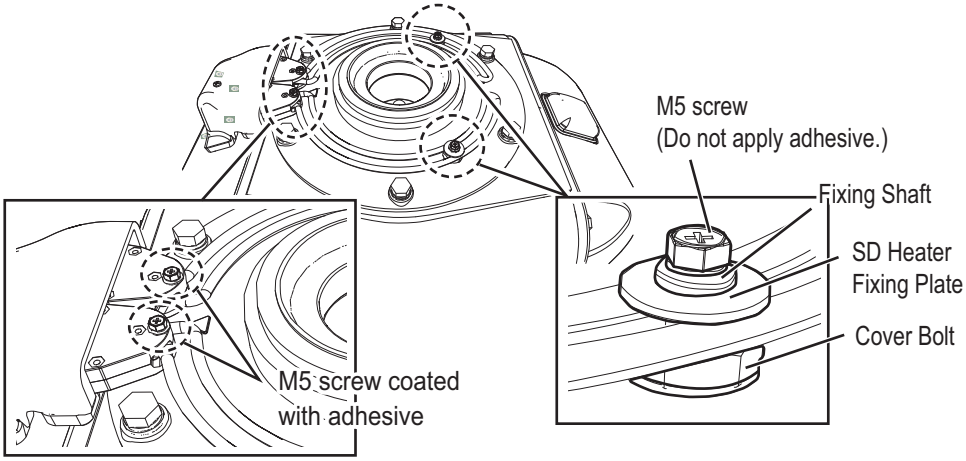

10) Attach the supplied earth label over the earth label currently attached near the grounding terminal.

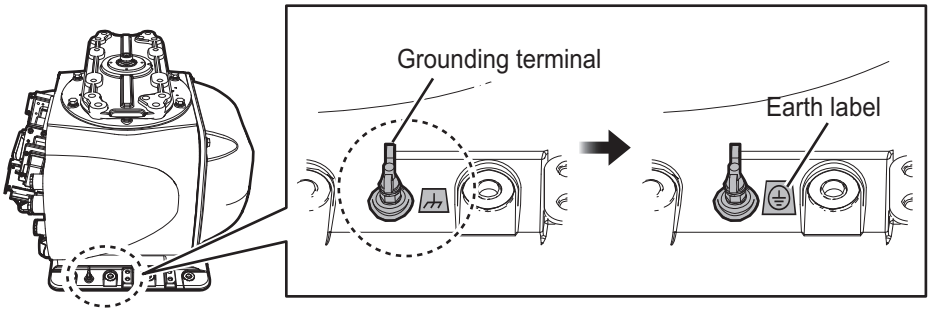


**Note:** If it is necessary to open the front cover after installing the DE-ICER kit, remove the de-icer power cable from the locking wire saddle shown in the following figure then detach the cover slowly to prevent damage to the heater.

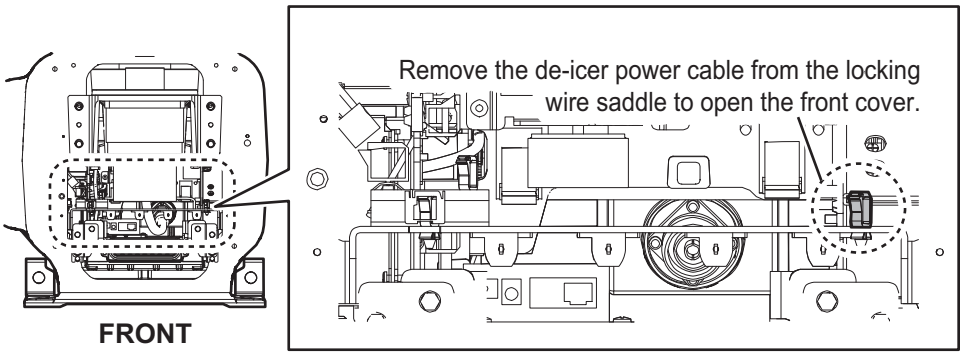


15. Reconnect the performance monitor connector (J807).
16. **Check that the gasket on the front and rear cover is seated properly**, then close the covers. The torque for the fixing bolts must be 28.0 N•m.
    **Note:** For the de-icer specifications, take care not to hit the heater elements on the chassis or radiator. If the heater hits something, unfasten the fixing screws for the heater to adjust the position of the heater. Then fix the heater again.

## 2.4.3 How to connect the cables for S-band (TR-UP, solid state) radar

Three cables are connected to the Antenna Unit: anttena, sub monitor* and de-icer* power cables (*: option). The procedure shows how to connect all cables. Disregard the descriptions for the optional equipment if not applicable.
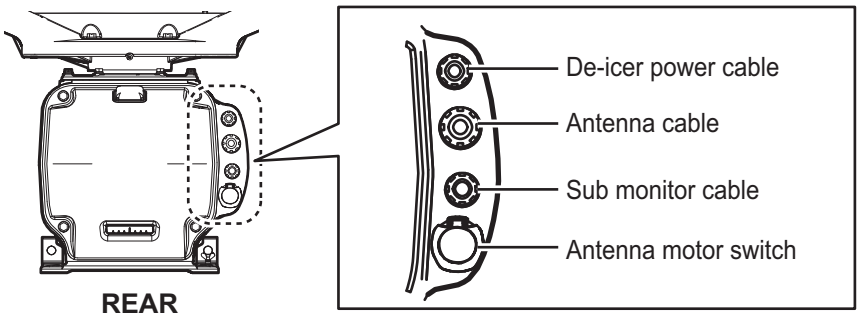
**Note:** Apply the supplied adhesive to the unused cable glands.