are required (for antenna and Processor Units). See section 2.11 and the interconnection diagram for connections in the junction box.

The Cable Extension Kit (Type: OP03-224-3, Code No.: 001-254-410), comprised of two junctions boxes, one LAN Signal Converters and necessary hardware, is available as an optional extra.

Note: Only the RW-9600 cable can be used for foremast installation. The RW-6895/4873 cables are not available.

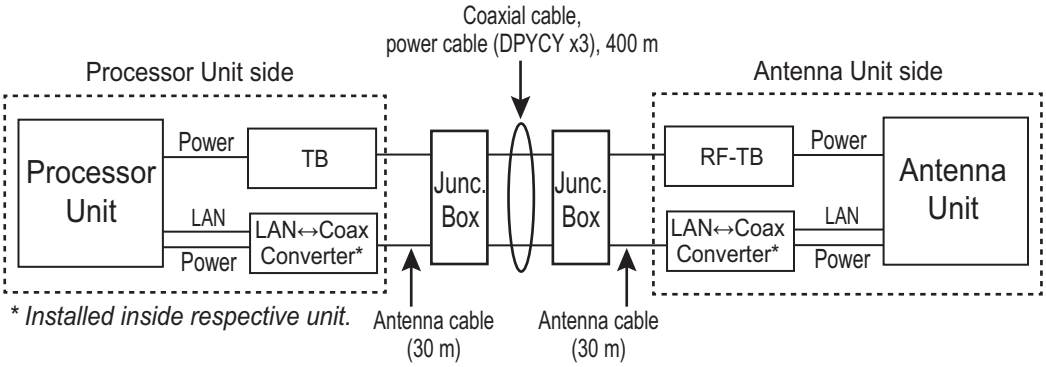

Method 2: Using antenna cable RW-9600

2.10.2 Wiring in the Antenna Unit with LAN Signal Converter pre-installed (X-band radar only)

Note: If the Antenna Unit does not included the LAN Signal Converter, the converter kit (available as an optional extra) is required. See "LAN Signal Converter Kit (option)" on page 2-69.

Dismount the transceiver unit in the Antenna Unit. See section 2.2.2, for details. Also, in the procedure, mainly figures of magnetron radar are shown.

1. Unfasten the coaxial cable from the converter in the Antenna Unit.

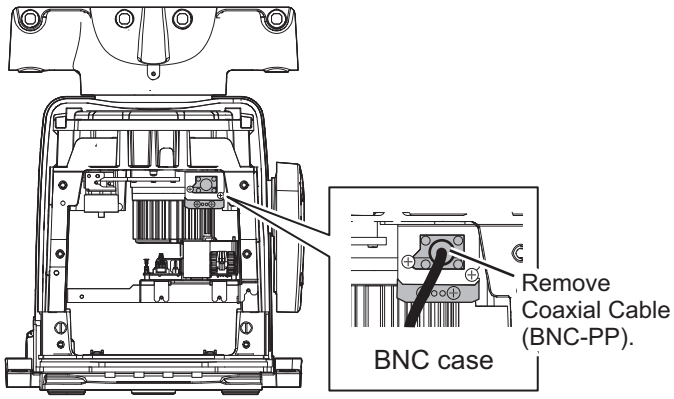

Rear view

2. Unfasten two screws to detach the BNC case from the Antenna Unit.

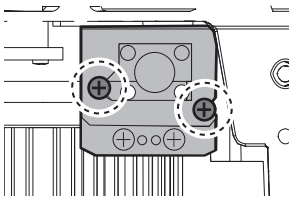

3. Loosen two screws on the BNC case. Attach the coaxial cable from the Antenna Unit then close the case.

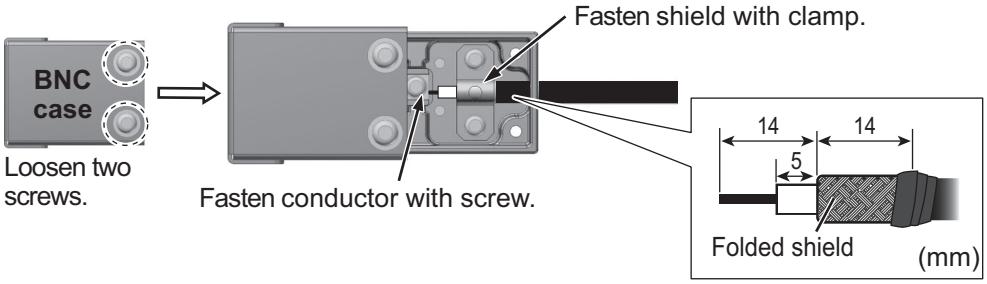

4. Fasten the BNC case to the original position in the Antenna Unit with original two screws, referring to step 2.
5. Mount the transceiver unit to the Antenna Unit.
6. Re-connect the coaxial cable (disconnected at step 1).

2.10.3 Wiring in the Processor Unit installed the LAN Signal Converter already (X-band radar only)

Some parts or wiring may have been omitted from the illustrations of the Processor Unit for clarity.

1. Disconnect the connection (A) between the converter and BNC case. Unfasten two screws (B) on the BNC case assembly to remove the BNC case assembly from the Processor Unit.

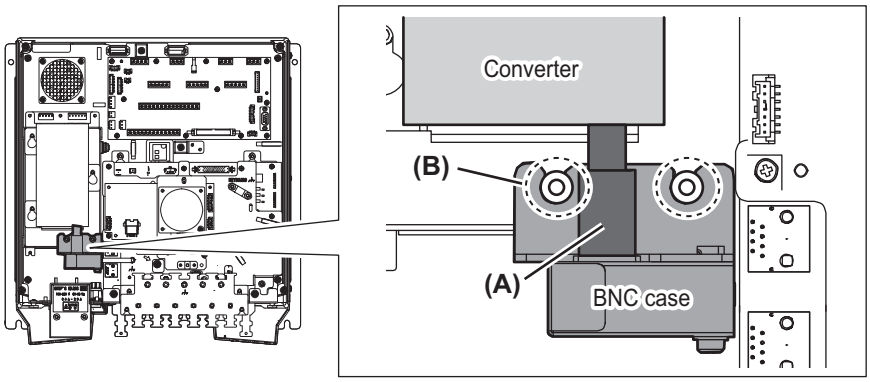

2. Loosen two screws on the BNC case. Attach the coaxial cable from the Antenna Unit.

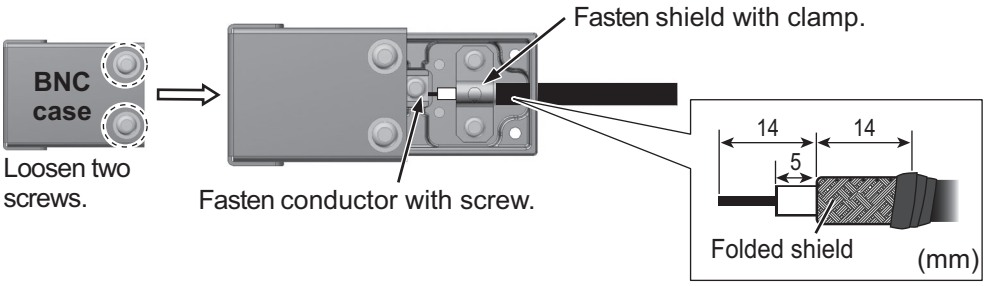

3. Loosen the screws (C) on the BNC case assembly, then attach the BNC case assembly to the original position in the Processor Unit.

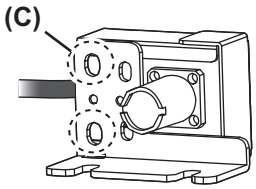

BNC case assembly

4. After attaching, adjust the position of the BNC case, then fasten the two loose screws (C) tightly.

2.10.4 How to check the installation

Observe the LEDs on the converter to check for proper operation and troubleshooting.

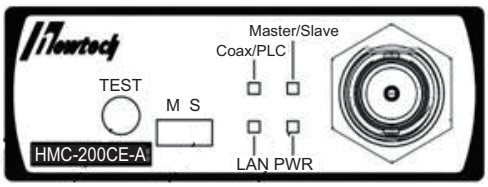

LED	State	Meaning
PWR	OFF	Power OFF
	Lighting green	Power ON
	Flashing orange	Test mode
LAN	OFF	Link down
	Lighting green	100 M link up
	Flashing green	100 M active
	Lighting orange	10 M link up
	Flashing orange	10 M active
Coax/PLC	OFF	Link down
	Lighting green	Link up
Master/Slave	Lighting green	Master mode
	Lighting orange	Slave mode

Note: The **TEST** button is for factory use. Do not operate the button.

2.11 Junction Box (option)

For FAR-2x18/2x28/2x38 X-band radars, the Junction boxes are required when the distance between the Antenna Unit and Processor Unit is greater than 100 meters (max. 460 meters); for example, the Antenna Unit is installed on the foremast. Use signal cable RW-9600 (×2), power cable DPYCY-6 (×3), and coaxial cable RG-12/UY(×3).

Pass each cable through its cable gland as shown to the right.

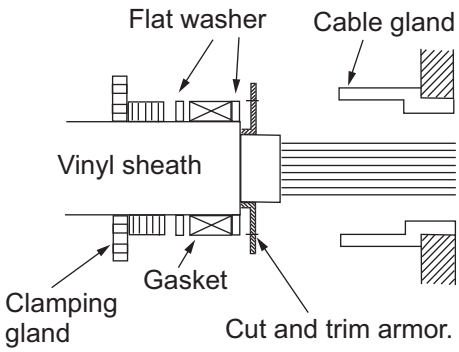

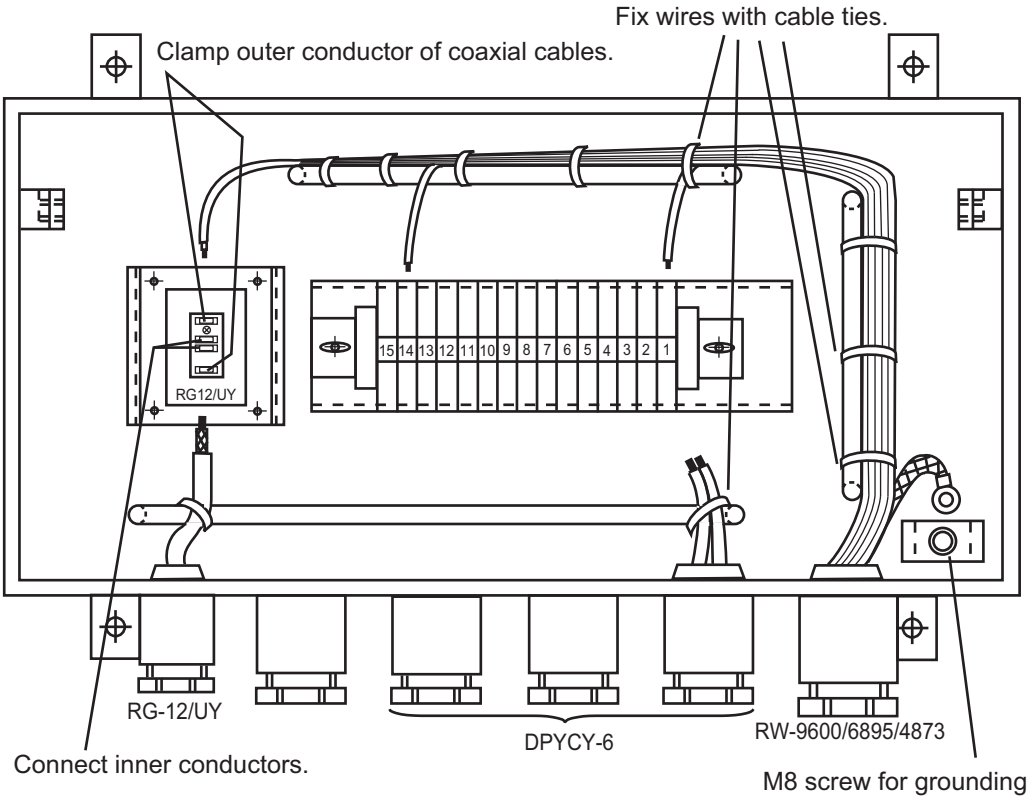

2.12 Intelligent HUB (option)

Secure the LAN cables to the cable clamps on the HUB-3000 with cable ties (supplied).

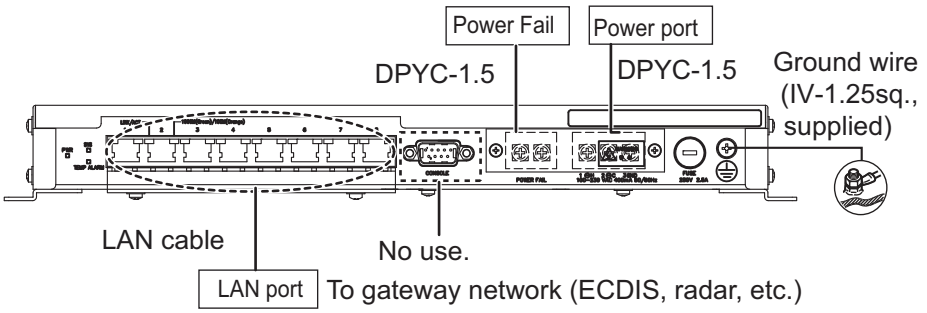

Attach the supplied LAN caps to unused connector holes to comply with waterproofing standard IPX2.

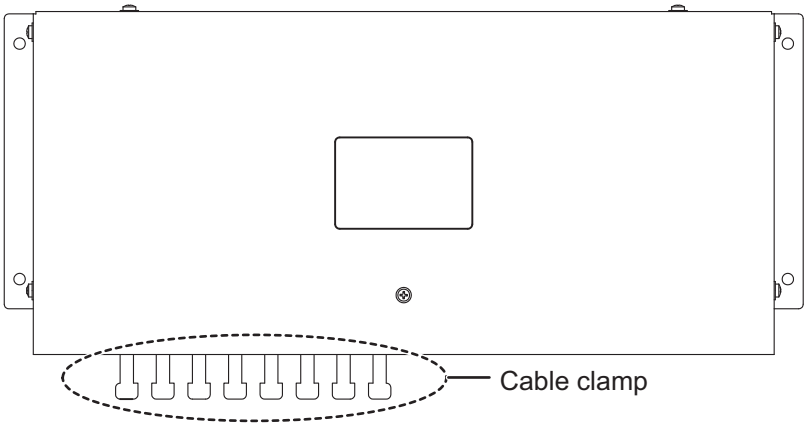

2.13 VDR Connection

The Processor Unit has the DVI-I port or the LAN port for connection of a VDR.

2.13.1 DVI-I (Analog RGB) port connection

- Use the optional RGB cable (DVI-BNCX5+GND-L2.0) to connect the VDR.
- The DVI-D port and DVI-I port have their own circuits. This prevents interruption of the radar picture shown on the main monitor connected to the DVI-D port, if a fault condition occurs at the DVI-I port.
- The Processor Unit continuously outputs video signals from its DVI-D and DVI-I ports. The operator cannot stop the output.

2.13.2 LAN2 port connection

- Connect a VDR complied to IEC-61162-450 standards to the LAN2 port.
- If the [VDR LAN OUTPUT] setting is set to [ON], the screenshot (JPEG-format) is output every 15 seconds through LAN2 port. See “[VDR LAN OUTPUT]”on page 3-24.
- The output image at the same resolution as the DVI-D port.
- The LAN2 port and DVI-D port have their own circuits. This prevents interruption of DVI-D port, if a fault condition occurs at the LAN2 port.

3. ADJUSTMENTS

Note: After completing the settings and adjustments, copy the setting data to a SD-card* (USB flash memory* for C-type radars), referring to the Operator's Manual. This will allow easy restoration of setting data after the MAIN Board is replaced, etc.

*: The SD card slot is in front of the Processor Unit, and the USB flash memory slot is connected to the RP board 03P9657.

At the first start-up after installation, turn on the Processor Unit with the main switch. Open the protected menus to adjust the radar. Follow the procedures in this chapter to complete the adjustment.

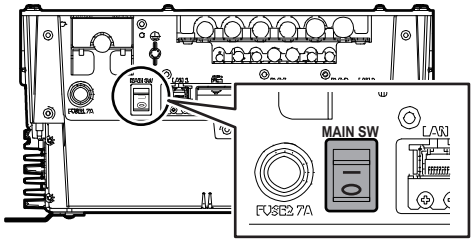

Main switch**

**: For DC power specifications, the Processor Unit does not have the main switch. To power on the Processor Unit for DC power specifications, turn on the ship's Mains.

For FAR-2x58 radars, turn on the Power Supply Unit also with the main switch.

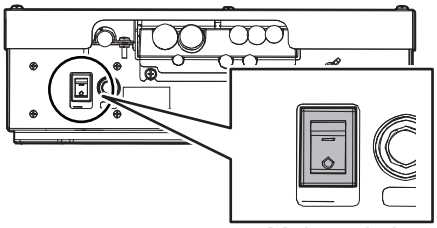
Main switch

Note: Turn the main switch of the Processor Unit off before turning the Power Supply Unit off. Further, both units should also be turned off at the ship's main switchboard.

Below are the controls on the Control Unit RCU-014/015(or optional RCU-016) that are used to make the adjustments.

RCU-014

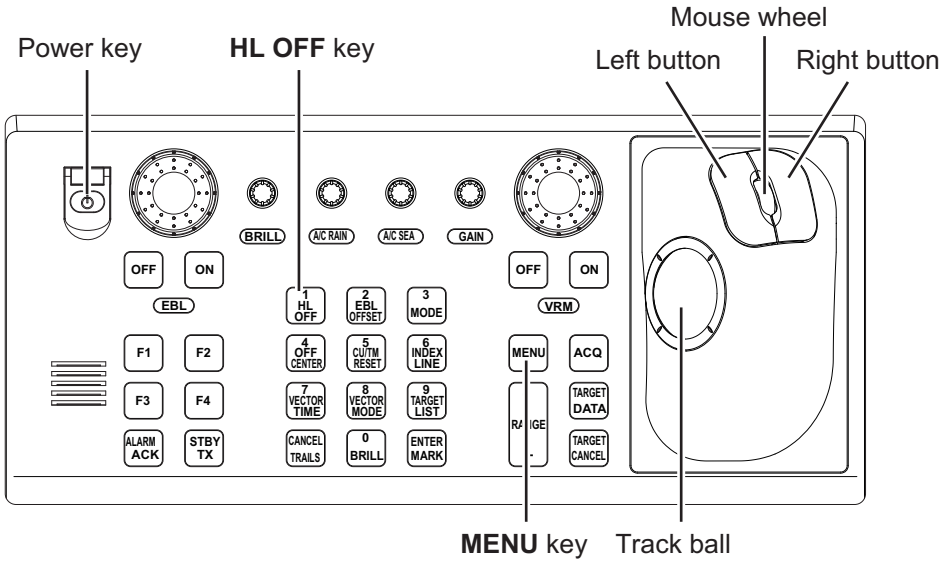

RCU-015/016

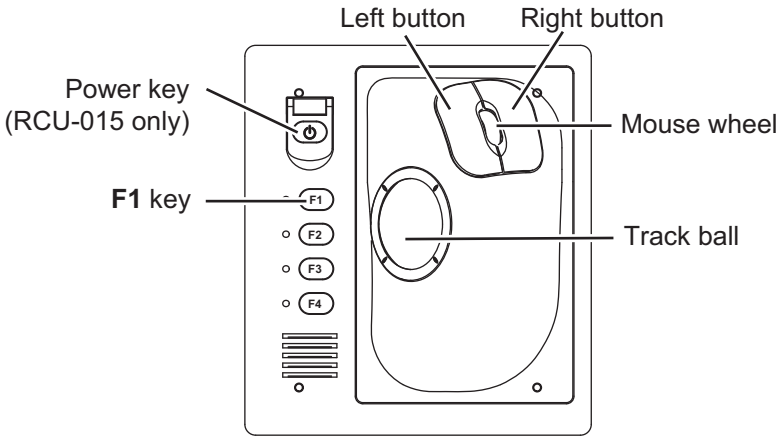

RCU-031

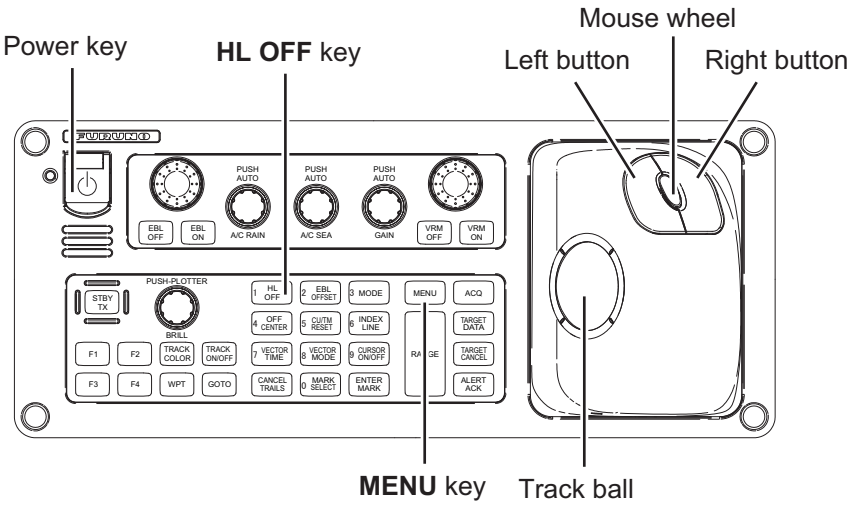

How to Use the Menu

1. Press the Power key to turn on the unit.
2. Press the **MENU** key or click the [MENU] box to open the main menu.
   The [RADAR INSTALLATION] menu does not appear when the unit is first turned on. It appears on the main menu after displaying it by following the procedures on the section 3.1 and is displayed until the unit is turned off.

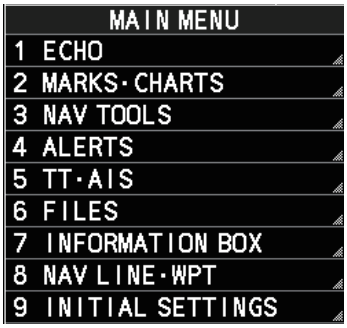

3. Operate the track ball or the mouse wheel to select a menu item then click the left button.
4. Operate the track ball or the mouse wheel to select a menu option then click the left button. To return to above layer, select [BACK] then click the left button or right button.
5. If the menu option requires entry of numeric data, rotate the mouse wheel to set the value, then click the left button.
6. Close the menu by pressing the **MENU** key once or click the right button few times.

3.1 How to Open the Radar Installation Menu

The [RADAR INSTALLATION] menu has various items through two pages for adjustment of the radar. To show this menu;

For RCU-014: Press and hold the **HL OFF** key, then press the **MENU** key five times.

For RCU-015/016: Put the cursor on the [MENU] box. Press and hold the **F1** key, then right-click five times.

Page 1

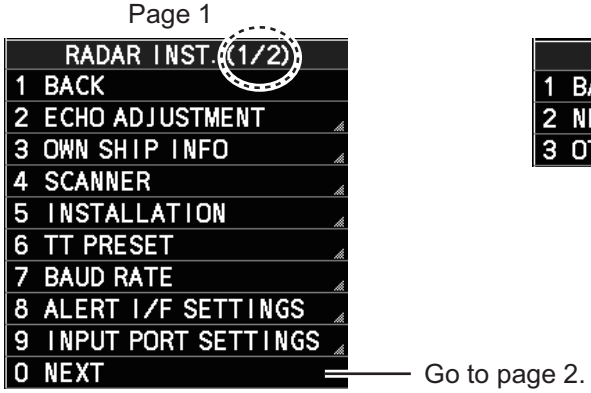

Page 2

Tuning initialization

Tuning initialization is required before setting up the radar.

Open the main menu then select [ECHO]→ [TUNING INITIALIZE] to start initialization. "TUNE INIT" appears on the top of the display during the initialization.

After tuning is completed, right-click twice to close the menu.

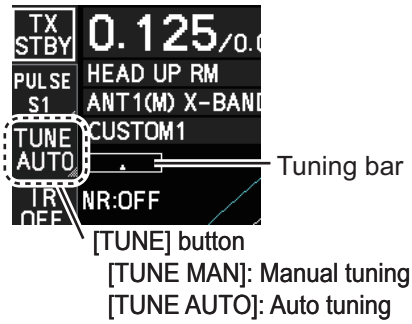

Note 1: In STBY, this menu is not available.

Note 2: For solid-state device radar, this menu is invalid.

3.2 How to Align the Heading

You have mounted the Antenna Unit facing straight ahead in the direction of the bow. Therefore, a small but conspicuous target dead ahead visually must appear on the heading line (zero degrees).

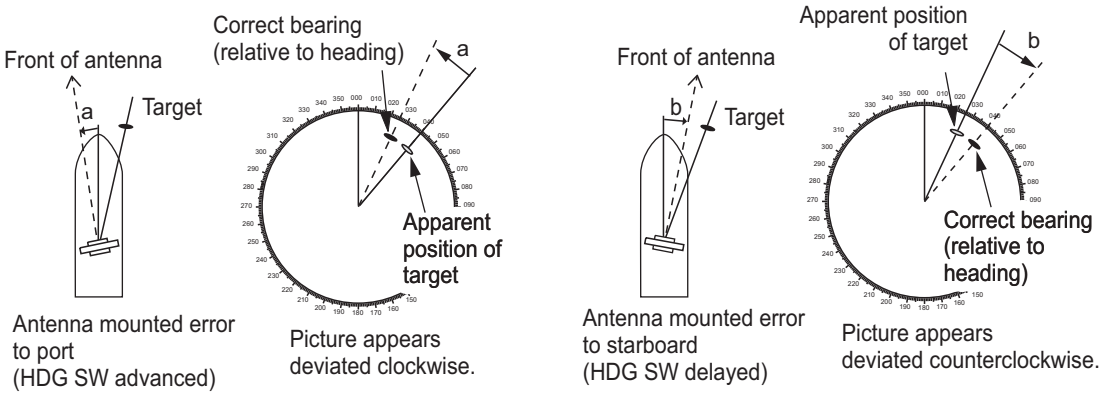

In practice, you will probably observe some small bearing error on the display because of the difficulty in achieving accurate initial positioning of the Antenna Unit. The following adjustment will compensate for this error.

1. Select a stationary target echo at a range between 0.125 and 0.25 NM, preferably near the heading line.
2. Operate the EBL control to bisect the target echo.
3. Read the target bearing.
4. Measure the bearing of the stationary target on a navigation chart and calculate the difference between the actual bearing and apparent bearing on the radar screen.
5. Show the [RADAR INSTALLATION] menu.
6. Select [ECHO ADJUSTMENT] followed by [HD ALIGN].
7. Key in the bearing difference. The setting range is 0° to 359.9° (default: 000.0°).
8. Confirm that the target echo is displayed at the correct bearing on the screen.

3.3 How to Adjust the Sweep Timing

Sweep timing differs with respect to the length of the signal cable between the Antenna Unit and the Processor Unit. Adjust sweep timing at installation to prevent the following symptoms:

- The echo of a "straight" target (for example, pier), on the 0.25 NM range, appears on the display as being pulled inward or pushed outward. See the figure below.

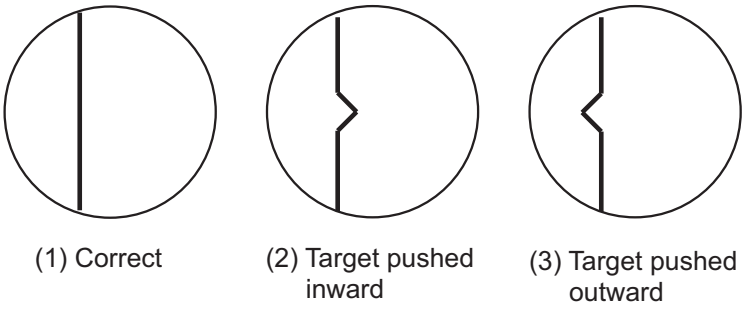

- The range of target echoes is incorrect.

1. Set the GAIN, A/C SEA and A/C RAIN controls shown below.
   GAIN: 80
   A/C SEA: Fully counterclockwise (OFF)
   A/C RAIN: Fully counterclockwise (OFF)
2. Open the [RADAR INSTALLATION] menu, then select [ECHO ADJUSTMENT] menu.
3. Select [TIMING ADJ VALUE] to set the value for adjustment timing manually. The setting range is 0000 to 4095. The default settings for each radar are shown below;
   - Default for magnetron radar: [325]
   - Default for solid state radar: [43]
4. After the adjustment is completed, set the radar to the minimum range. Confirm that no echoes are "missing" at the center of the radar screen.If echoes are missing, do step 3 again.

3.4 How to Suppress Main Bang

Main bang is the clutter at the center of the screen that you typically see on the radar display, and it may mask close-in targets. If main bang appears at the screen center, suppress it as follows.

1. Transmit the radar on a long range and then wait ten minutes.
2. Adjust the gain to show a slight amount of noise on the display.
3. Select the 0.125 NM range, and turn off the **A/C SEA** and **A/C RAIN** controls.
4. Show the [RADAR INSTALLATION] menu, then select [ECHO ADJUSTMENT].
5. Select [MBS LEVEL], then set a value that causes the main bang to faintly disappear. The setting range is 0 to 255 (default: 0).

3.5 Other Settings

This section describes the menu items not previously described.

3.5.1 [ECHO ADJUSTMENT] menu

Open the main menu then select [RADAR INSTALLATION]→ [ECHO ADJUSTMENT] to open the [ECHO ADJUSTMENT] menu.

Page 1

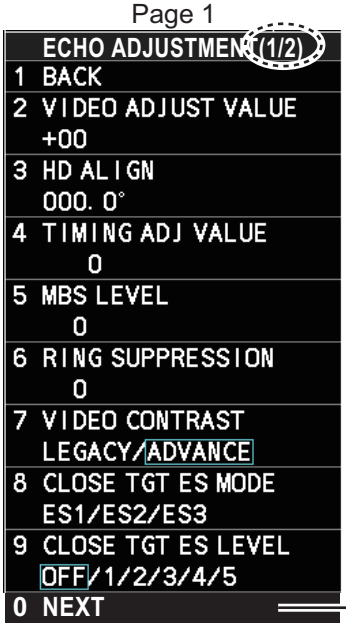

Go to page 2.

Page 2

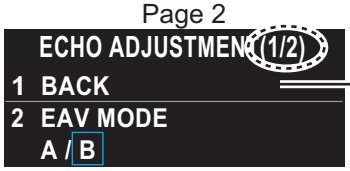

Go back to page 1.

[VIDEO ADJUST VALUE]

Adjust the video level manually to remove noise.

Preset the radar as follows:
- Interference Rejector (IR): 2
- Gain: 80
- Echo Stretch (ES): OFF
- Echo Averaging (EAV): OFF
- Range: 24 NM
- Pulse Length: Long

Set the value so that noise just disappears from the screen. The setting range is -32 to +32 (default: +32).

Note: The setting range is 0 to +31 (default: +12) when the [MODEL] setting is set to [50], see "[MODEL]" on page 3-12.

When using the number keys, the indication is first selected as a whole. At this time, you can toggle between plus "+" or minus "-". Press the **8** key for "-", press the **2** key for "+". If single digits are highlighted, toggle is not possible. In this case, press the **CANCEL/TRAILS** key to re-highlight the whole indication.

[RING SUPPRESSION]

Remove “ring” noise which appears with the waveguide type radars. Adjust so the rings disappear at the range of 0.125 m. The setting range is 0 to 255 (default: 1).

Note: This menu is **NOT** available when the [MODEL] setting is set to [50] (see "[MODEL]" on page 3-12).

[VIDEO CONTRAST]

Select [ADVANCE] to clarify the echo image difference (default: [ADVANCE]).

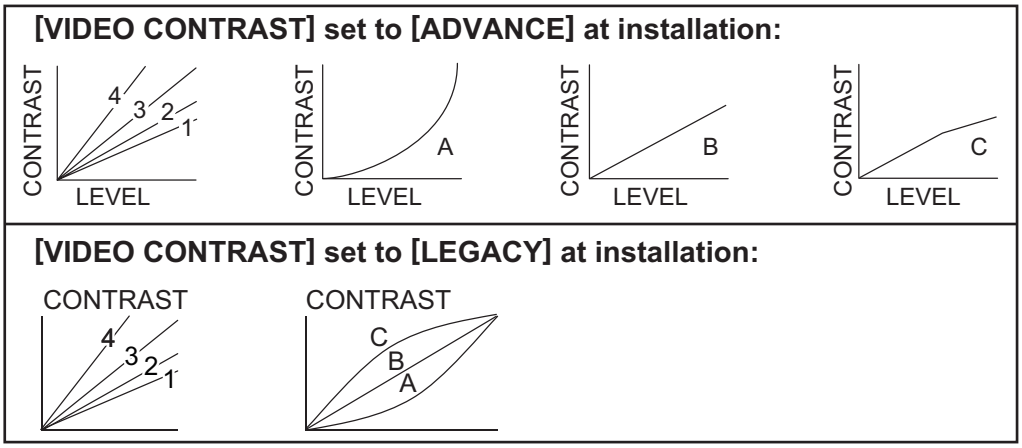

[CLOSE TGT ES MODE]

The [ECHO STRETCH] menu can enlarge the whole targets of the screen (Main menu → [ECHO] → [CUSTOMIZED ECHO] → [ECHO STRETCH]). This [CLOSE TGT ES MODE] feature can also enlarge targets around own ship in addition to the [ECHO STRETCH] feature.

This menu has three options, [ES1], [ES2] or [ES3]. Select the setting to enlarge the targets around own ship for the [ECHO STRETCH] setting ([1] to [3]).

- [ES1]: Select when enlarging the targets around own ship with selected [1] at [ECHO STRETCH].
- [ES2]: Select when enlarging the targets around own ship with selected [2] at [ECHO STRETCH].
- [ES3]: Select when enlarging the targets around own ship with selected [3] at [ECHO STRETCH].

Note: Multiple selections among [ES1], [ES2] and [ES3] are possible.

The each effect level depends on the following menu [CLOSE TGT ES LEVEL] ([OFF], [1] to [5]).

[CLOSE TGT ES LEVEL]

Select the effect level of the echo stretch around own ship which is selected in [CLOSE TGT ES MODE] among six enlarging patterns. The higher the number the greater the amount of stretch. To disable echo stretch, select [OFF] (default).

The six enlarging patterns are shown in the table below, “Distance 1” means that the distance is closer to the own ship, and “Distance 3” means that the distance gets farther. “Distance 3” is about half of display range.

Setting (Effect level pattern)	Distance 1	Distance 2	Distance 3
[OFF]	—	—	—
[1]	weak	weak	—
[2]	weak	weak	weak

Setting (Effect level pattern)	Distance 1	Distance 2	Distance 3
[3]	Medium	weak	—
[4]	Medium	weak	weak
[5]	Strong	Medium	weak

3.5.2 [OWN SHIP INFO] menu

Enter the length and width of the ship, and scanner, GPS antenna and conning positions, referring to the description and figure below.

Note: This radar uses [CONNING POSITION] for CCRP and [SCANNER POSITION] for ANT as reference points for measurements and calculations. The commissioning engineer should understand this point, and enter own ship information accordingly.

Open the main menu then select [RADAR INSTALLATION]→ [OWN SHIP INFO] to open the [OWN SHIP INFO] menu.

Example

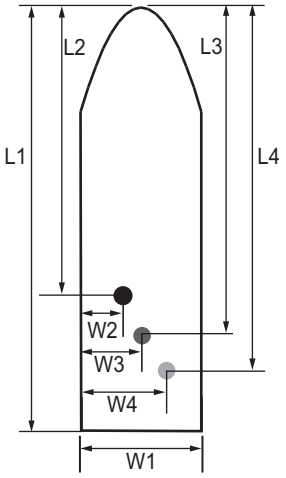

L1: Ship length
W1: Ship width
L2: Conning position (from bow)
W2: Conning position (from port)
L3: Scanner position (from bow)
W3: Scanner position (from port)
L4: GPS antenna position (from bow)
W4: GPS antenna position (from port)

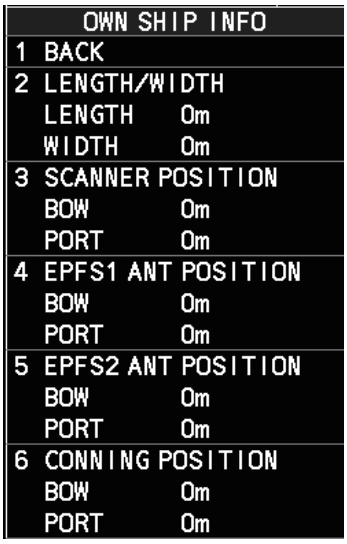

[LENGTH/WIDTH]

Enter the ship's length and width (0 to 999, default: 0).

[SCANNER POSITION]

Enter the distance from the scanner to both bow and port (0 to 999, default: 0).

[EPFS1(2) ANT POSITION]

Enter the distance from the GPS antenna to both bow and port (0 to 999, default: 0). If a 2nd GPS antenna is installed, enter its position in [EPFS2 ANT POSITION].

[CONNING POSITION]

Enter the distance from the conning position to both bow and port (0 to 999, default: 0).

3.5.3 [SCANNER] menu

Open the main menu then select [RADAR INSTALLATION]→ [SCANNER] to open the [SCANNER] menu.

Note: [SCANNER] menu items differ depending on the software version, as shown in the figures to the right.

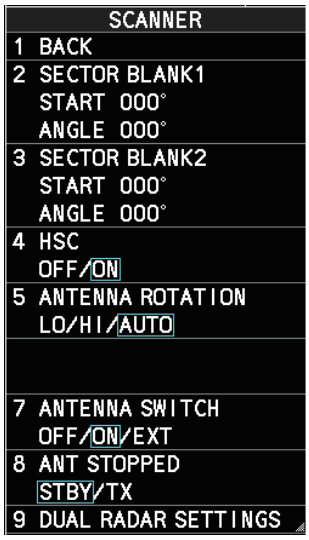

For the radars (software version "01.**")

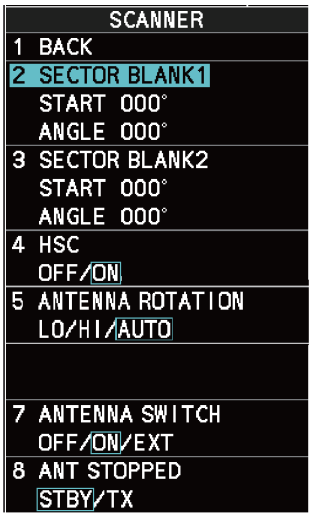

For the radars (software version "50.**")

[SECTOR BLANK1(2)]

Set area(s) where to prevent transmission. Heading must be properly aligned (see section 3.2) before setting any blind sector. For example, set the area where an interfering object at the rear of the antenna would produce a dead sector (area where no echoes appear) on the display. To enter an area, enter start bearing relative to the heading and dead sector angle. To erase the area, enter 0 for both the [START] and [ANGLE] sections. The setting range of [START] is 0° to 359° (default: 000°) and [ANGLE] is 0° to 180° (default: 000°).

Note 1: Turn off a stern blind sector when adjusting the PM gain, to display the echo from the performance monitor properly.

Note 2: If the PM is active, these menus are **NOT** available on FAR-2x58 radars.

[HSC]

Select [ON] for HSC only.

Note: This menu is **NOT** available when the [MODEL] setting is set to [50] (see "[MODEL]" on page 3-12).

[ANTENNA ROTATION]

This menu is available when [HSC] is set to [ON].

Note 1: When this menu appears in gray, it is not available. The antenna rotation speed is fixed at 24 rpm.

Note 2: For 42 rpm S-band radars, the High Speed Kit (type: OP03-248, available as an optional extra) is required.

Select [LO] for 36 rpm, [HI] for 42 rpm. [AUTO] sets the normal rotation speed to 36 rpm and switches the rotation speed to 42 rpm when the short pulse is selected (default: [AUTO]).

[ANTENNA SWITCH]

Select [OFF] at [ANTENNA SWITCH] to prevent antenna rotation. For [EXT], set on/off from an external device (default: [ON]).

[ANT STOPPED]

For qualified technician. [ANT STOPPED] prevents transmission while the antenna is stopped in STBY (default: [STBY]).

[DUAL RADAR SETTINGS]

When installing two FAR-2xx8 series radars, the image from both radars (main radar and external radar) may be shown together on one radar display.

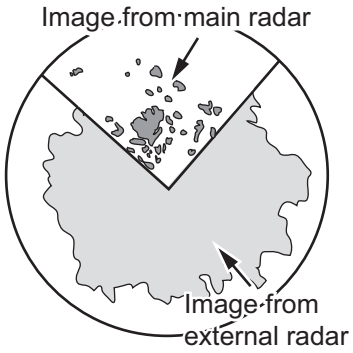

Note 1: This function is NOT available between the FAR-2xx8 radar and other radars.

Note 2: This function is available only for A/B type radars installed with software version “01.**”.

Note 3: When [COMBINE] is selected, some function are unavailable. The following table shows the available menus in the [RADAR INSTALLATION] menu when [COMBINE] is selected. For menu operations, see the Operator’s manual (OME-36520). The unavailable menus are displayed in gray.

[RADAR INSTALLATION] menu	Available menus
[ECHO ADJUSTMENT] [OWN SHIP INFO]	— (All menus are not available.)
[SCANNER]	[DUAL RADAR SETTINGS] except for [EXT RADAR]
[INSTALLATION]	[REMOTE MAINTENANCE], [SYSTEM MONITOR] and [ANT CABLE].
[TT PRESET]	— (All menus are not available.)
[BAUD RATE]	All menus are available.
[ALERT I/F SETTINGS] [INPUT PORT SETTINGS]	All menus are available.
[NETWORK SETTINGS]	[VDR SETTINGS], [RX SETTINGS]
[OTHER SETTINGS]	[OVERLAY1], [OVERLAY2], [EAV W/O GYRO], [ECDIS], [EXT BRILL CONTROL]

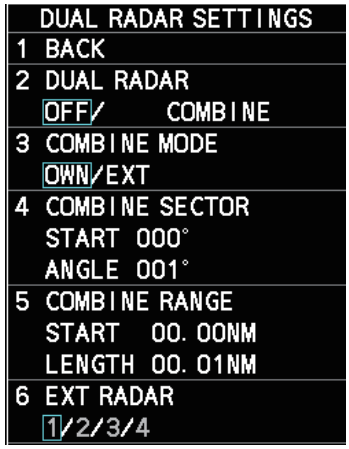

- [DUAL RADAR]: Select [COMBINE] to enable the dual radar display. If the radars other than FAR-2xx8 series radars are on the network, select [OFF].
  Note: When the [WAVE MODE] ([ECHO]→[WAVE MODE]) setting is [ON], this menu is displayed in gray and not operative.
- [COMBINE MODE]: Select the reference of the antenna position, own radar or external radar.
  [OWN]: Set own radar’s antenna as the reference point and set display area of own radar. The area outside that set here is where the image from the external radar is displayed.
  [EXT]: Set the external radar’s antenna as the reference point and set the display area of the external radar. The area outside that set here is where the image from own radar is displayed.

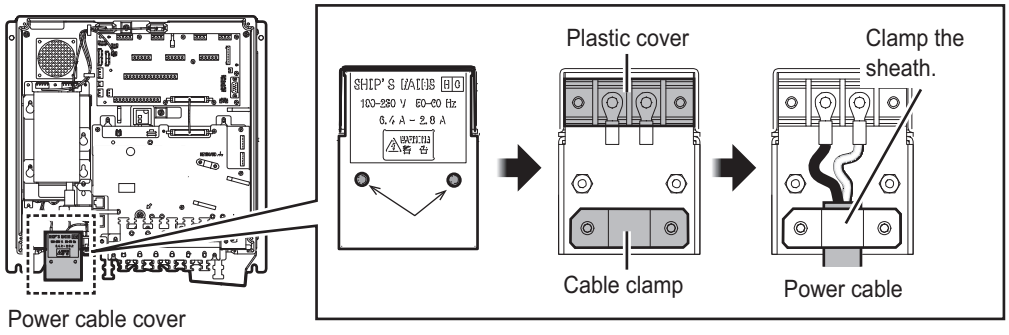

4. Remount the plastic cover and the power cable cover.

Connection of cables for serial, contact signal lines and sub monitors of ECDIS

1. Unfasten the four bolts dashed circled below to remove the upper plate of the cable clamp.

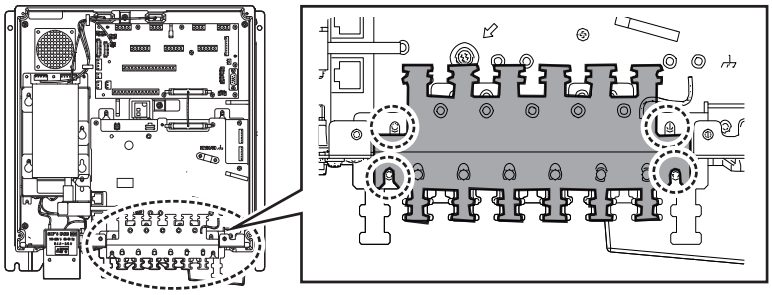

2. Remove the spacers to pass the appropriate cables on the upper and lower plates. The recommended cable entrances are shown as below.

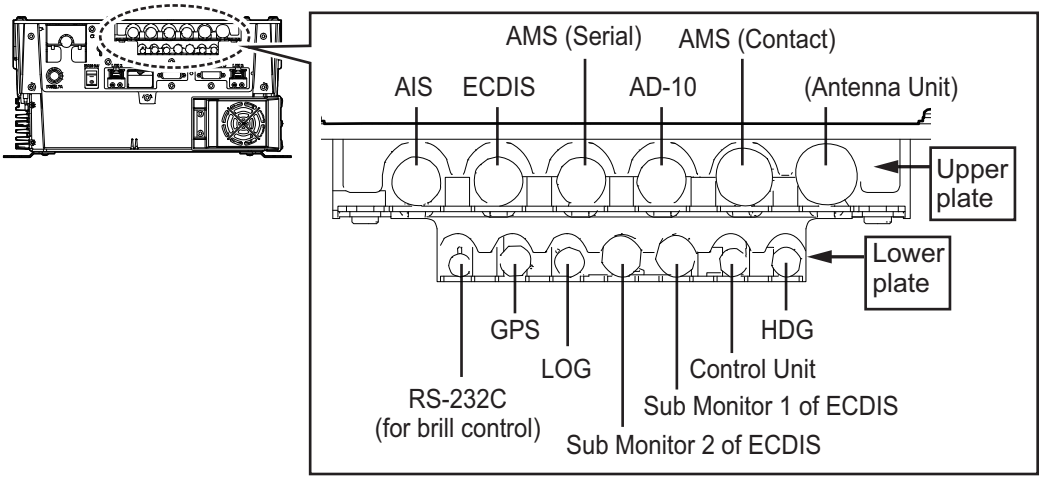

3. Fasten the cables to the post part of the plates with cable ties (local supply).
   Note: Be sure the vinyl sheath on the post.

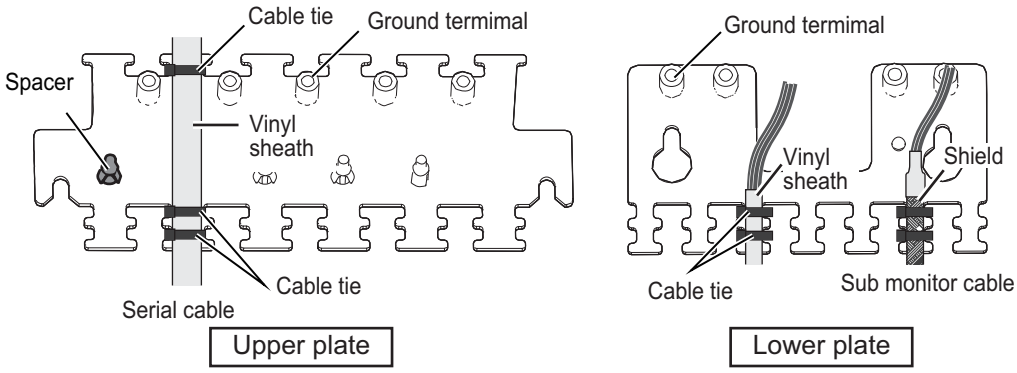

4. Pass the cables to the TB board 03P9648 and 03P9562 through the locking wire saddles (A, B and C) in the figure shown right.
   For the cables on the upper plate, use locking wire saddles (A and B).
   For the cables on the lower plate, use locking wire saddles (A, B and C).

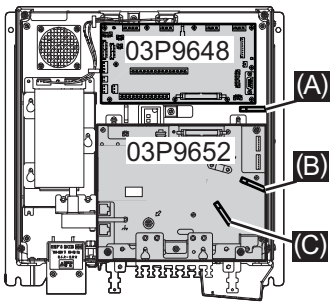

5. Connect the connectors to the TB Board. referring to the interconnection diagram.

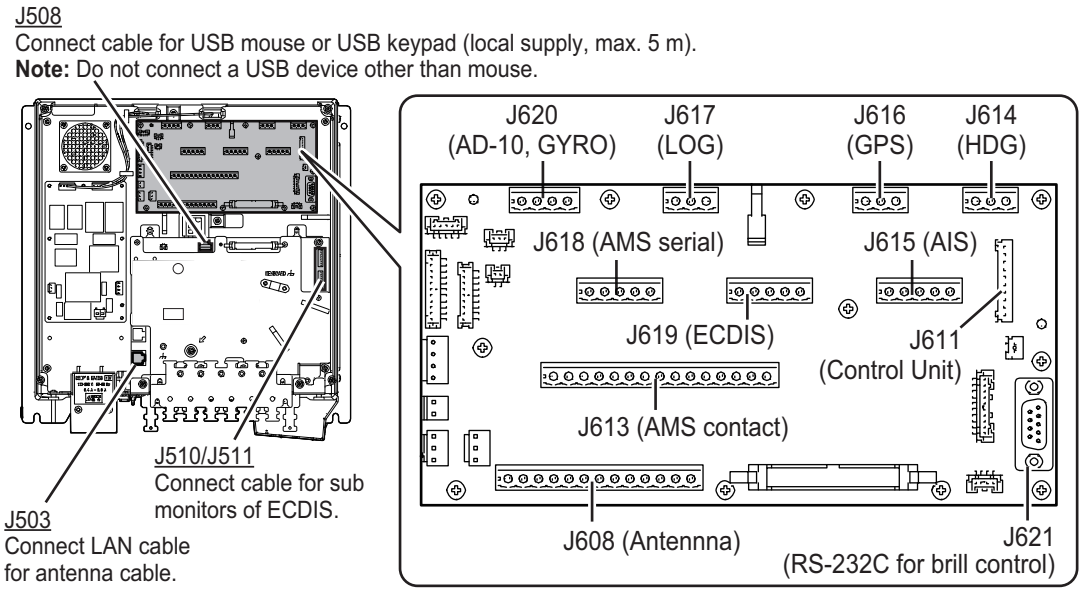

6. Connect the ground wires of cables to the near ground terminals on the plates.

Connection of cables for Control Unit

1. Unfasten the four bolts, indicated with dashed circles below, to remove the upper plate of the cable clamp.

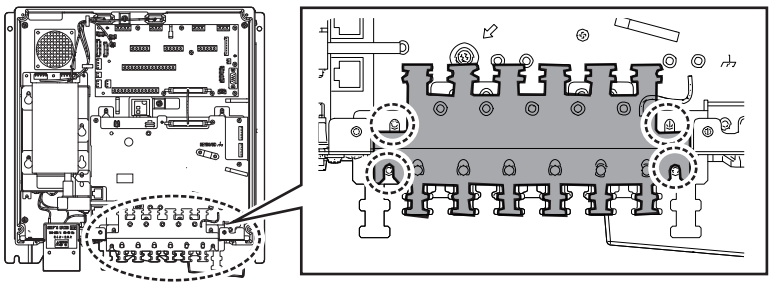

2. Remove the appropriate spacer to pass the cable for Control Unit on the lower plate. The recommended cable entrance is shown as below.

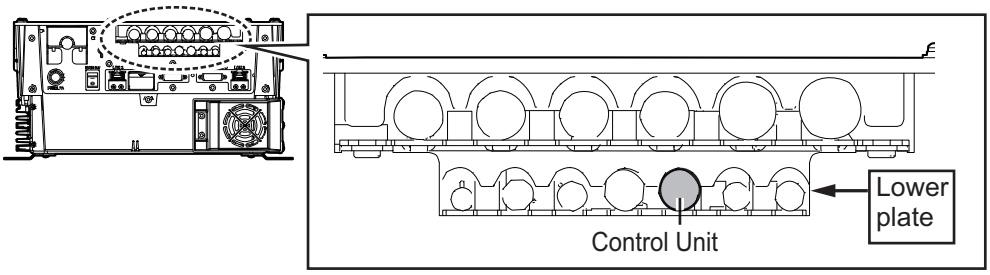

3. Fasten the cable to the post part of the plate with a cable tie (local supply).
Note: Be sure the vinyl sheath on the post.

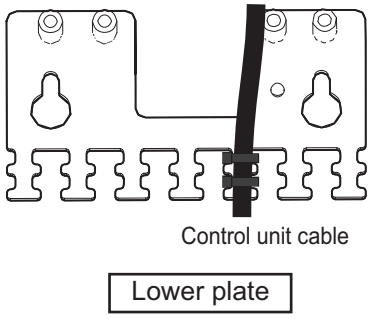

4. Pass the cables to the TB board 03P9648 and clamp the shield of the cable with the cable clamp (A) shown in the following figure. Then, connect to J611 and J612.

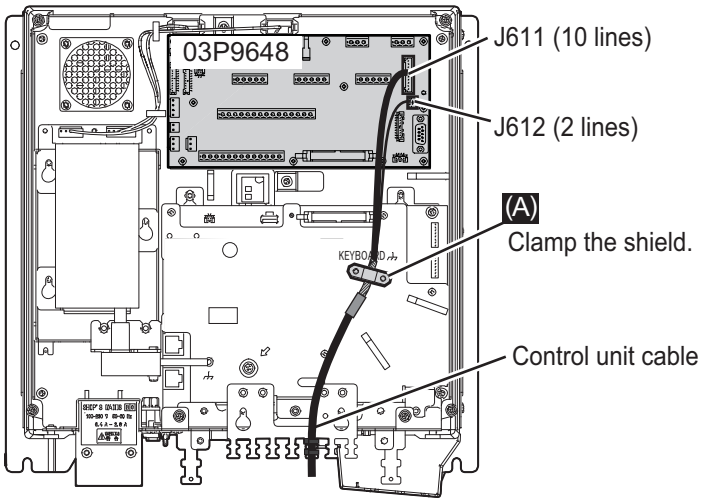

Connection of cable of LAN, Monitor Unit, VDR

Connect the cables of Intelligent HUB (HUB-3000) and Switching HUB (HUB-100) to the LAN ports in front of the Processor Unit.

Connect the cables of Monitor unit or VDR to the DVI ports at the front of the Processor Unit.

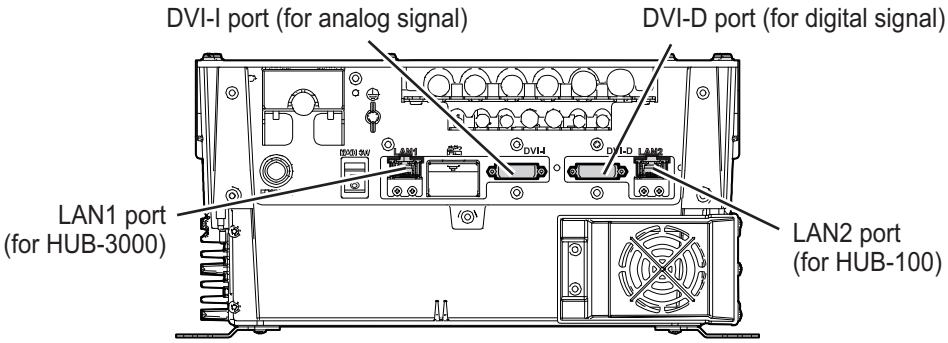

For VDR connection, the RGB signal can be output with using the optional DVI-BNC cable kit OP03-252 (Code No.: 001-496-900).

1. Attach the five connectors of the Cable Assembly (supplied) to the fixing plate (supplied) with cable ties as below.
2. Establish the ground system on the fixing plate.
3. Fix the cable assembly to the appropriate location with two screw (M5). The location must be within 200 cm of the Processor Unit.
4. Connect the VDR cables to the connectors of the cable assembly.

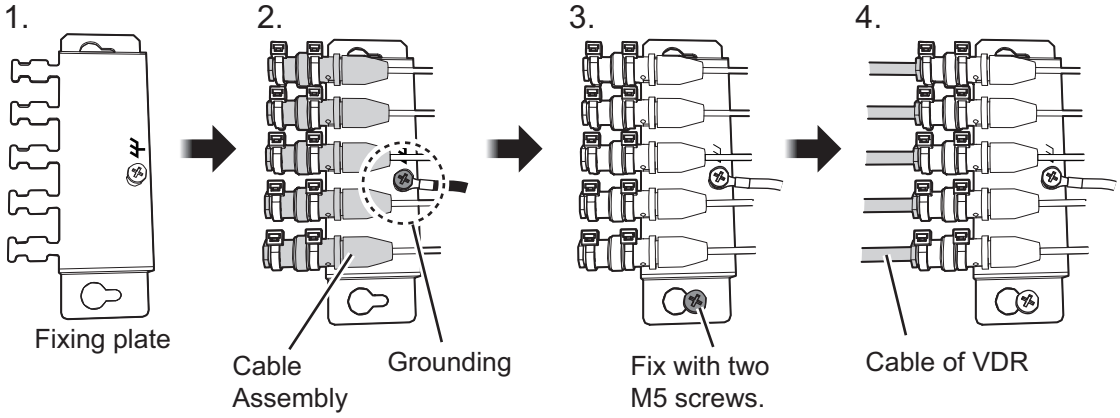

Fastening of USB connector (for C-type radars)

The USB connector of the RP board should be fastened as shown in the figure to the right. Use three cable ties (local supply) to secure the connector of the USB cable to the upper cable entrance of the Processor Unit.

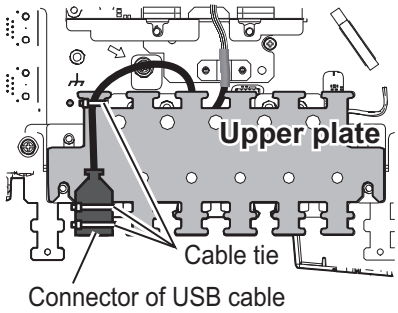

If there is no extra space on the cable entrance of the Processor Unit and you can not secure the cable connector, pass the USB cable next to the thinnest cable (cable entrance with the most room to spare), then pull the USB connector towards the front of the Processor Unit. Place the USB cable beneath the other cables to prevent water intrusion into the USB cable. Secure the USB cable to the neighboring cable with the supplied cable ties.

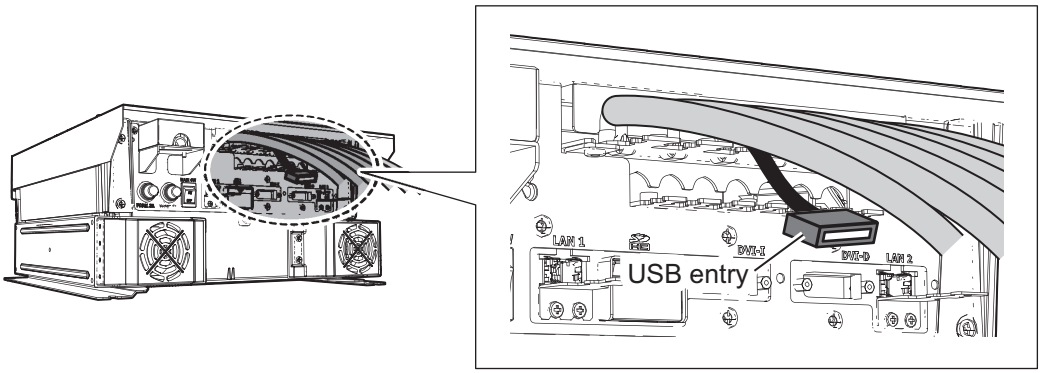

2.9 Monitor Unit

For the wiring of the monitor unit, see the operator's manual supplied with the monitor unit.

Mounting considerations

- Standard type
  - Connect the radar main monitor to the DVI1.
  - Connect the sub radar monitor to the DVI2.
- VDR connection
  To connect a VDR, it is necessary to output data in analog format. To connect a VDR to the DVI-I port, use the optional DVI-BNCX5+GND-L2.0 cable to output the RGB signal from the DVI-I. See the operator's manual supplied with the VDR. Adjustment of the output is necessary.

Menu Setting

The [INSTALLATION SETTING] menu appears only when the power is turned on for the first time after installation of the monitor unit.

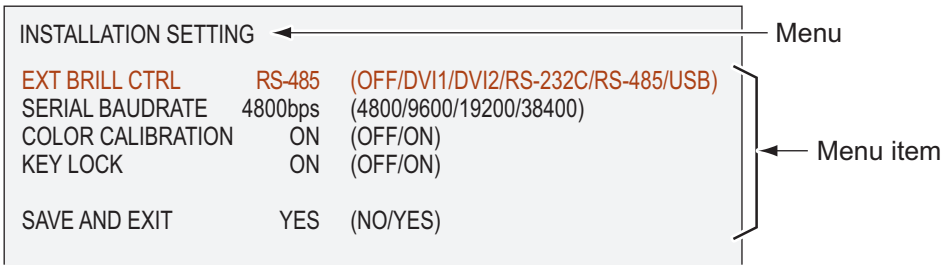

Adjust the settings referring to the following table.

EXT BRILL CTRL	COLOR CALIBRATION	KEY LOCK	DVI PWR SYNC*
DVI	OFF	ON	ON

*: [DVI PWR SYNC] is the slide switch at the bottom rear of the monitor unit. Confirm that this switch is set to [ON] (default setting). See Slide switch below for details.

Slide switch

Set the slide switch to "ON" (default setting). This setting automatically powers the monitor unit on or off according to the DVI signal input. The power switch of the monitor unit is inoperative.

Note: The OFF position provides control of the monitor unit power with the power switch of the monitor unit.

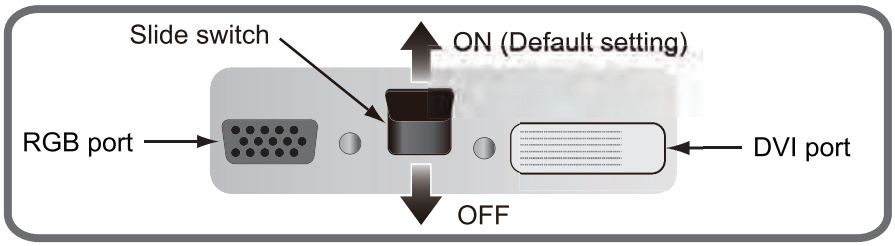

How to open the [INSTALLATION SETTING] menu

Turn off the monitor unit. While you hold the **DISP** key, press the **BRILL** key to turn on the monitor unit. Keep the **DISP** key pressed until the [INSTALLATION SETTING] menu appears.

Note: When the [DVI PWR SYNC] slide switch is ON, turn on the connected external equipment while you press the **DISP** key to turn on the monitor unit.

2.10 LAN Signal Converter

The LAN Signal Converter allows the use of existing antenna cable RW-9600/6895/4873 for TR-UP radar.

If the LAN Signal Converter is not attached in the antenna and Processor Units, the required LAN Signal Converter Kit (available as an optional extra) is listed below.

For X-band radar only, you can select a specification with the LAN Signal Converter pre-installed at the factory.

LAN Signal Converter Kit (option)

Radar	Type	Code No.
X-band magnetron radar	OP03-247-3	001-496-580
X-band solid state radar	OP03-247-4	001-568-890
S-band magnetron radar	OP03-247-2	001-496-570
S-band solid state radar	OP03-247-1	001-496-560

2.10.1 Application overview

The LAN Signal Converter has two applications.

Application 1: Use with existing antenna cable (retrofit)

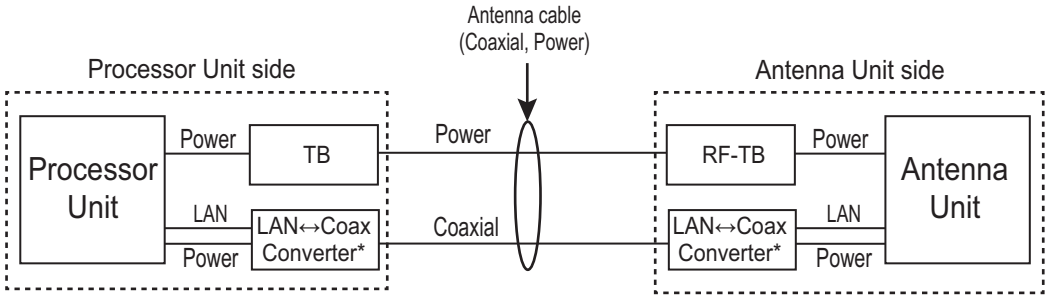

** Installed inside respective unit.*

Method 1: Using existing antenna cable (RW-9600/6895/4873)

Note: Use with existing antenna cable (RW-9600/6895/4873) in case of retrofit. The maximum length of the antenna cable is 100 m for RW-9600, 50 m For RW-6895/4873.

Application 2: Foremast installation (for X-band radar only)

Foremast installation, where the distance between the Antenna Unit and the Processor Unit is more than 100 m (max. 460 m). In this case, two Junction Boxes RJB-001