"RW-0013/RW-0030/03CA00099 (Antenna cable for FAR-2x58 radars)" on page 2-7.

Note: For the antenna cable 03CA00099, remove the shim plate from the cable entrance before passing the cable.

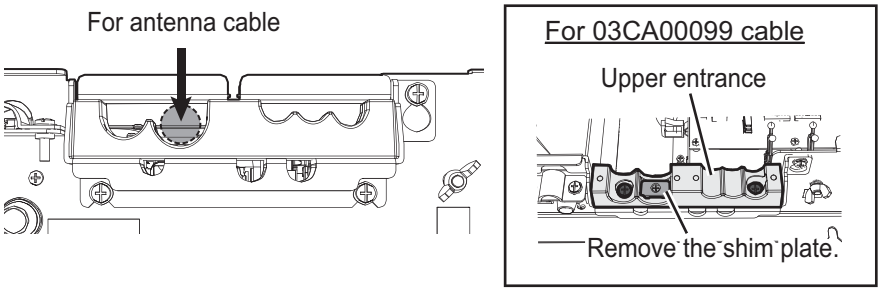

3. Connect each line of the cable to the appropriate connectors on 03P9668 board.
   - Serial lines: TB701, TB702 and TB703, through the wiring clamp (A)
   - Shield line: Screw (C)
   - Coaxial cable: J716 through the wiring clamp (D). Then clamp the shield part of the coaxial cable with the cable clamp (E).

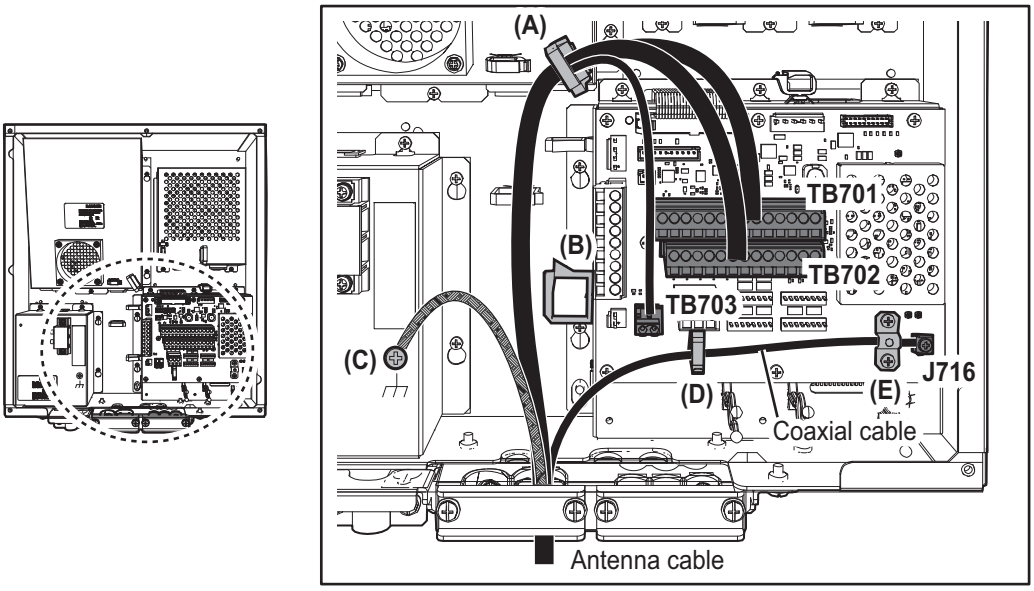

Connection of Motor power cable (From Antenna Unit)

1. Connect the lines of the cable to the appropriate WAGO connectors (TB713), referring to the interconnection diagram at the back of this manual.
2. Set the motor power cable on the upper cable entrance, and fasten the armor part of the antenna cable with the cable clamp. For the clamp position, see "TPYCY-2.5 (for Motor power cable)" on page 2-48.

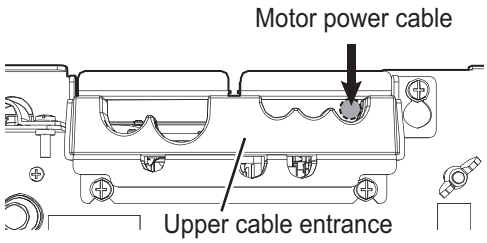

3. Connect the lines of the Motor power cable as follows:
   - Serial lines: TB713. Clamp the armor part of the cable with the cable clamp.
     Note: Twist the motor power cable once to handle extra length.

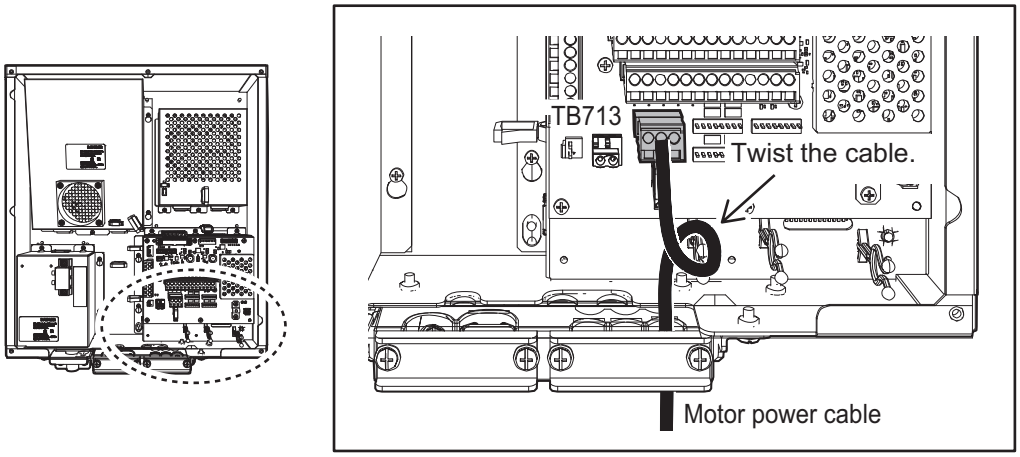

Connection of Power cable

1. Loosen four screws on the front plate, then unfasten two screws on the cable clamp to set the power cable.

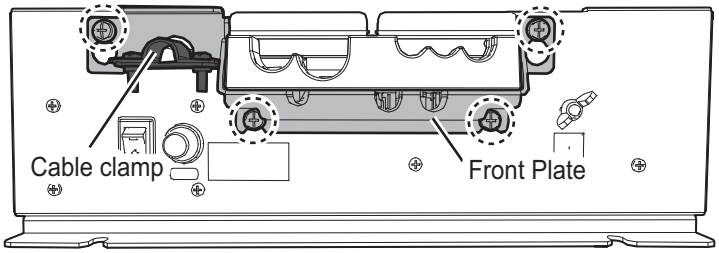

2. Set the power cable on the cable entrance, and fasten the sheath part of the power cable with the cable clamp. For the clamp position, see "DPYC-2.5 cable (for Power)" on page 2-48.
3. Remove the plastic cover on TB1 to pass the power cable.
4. Connect the cable to TB1 with the pre-attached crimp-on lugs, referring to the wiring label near TB1.

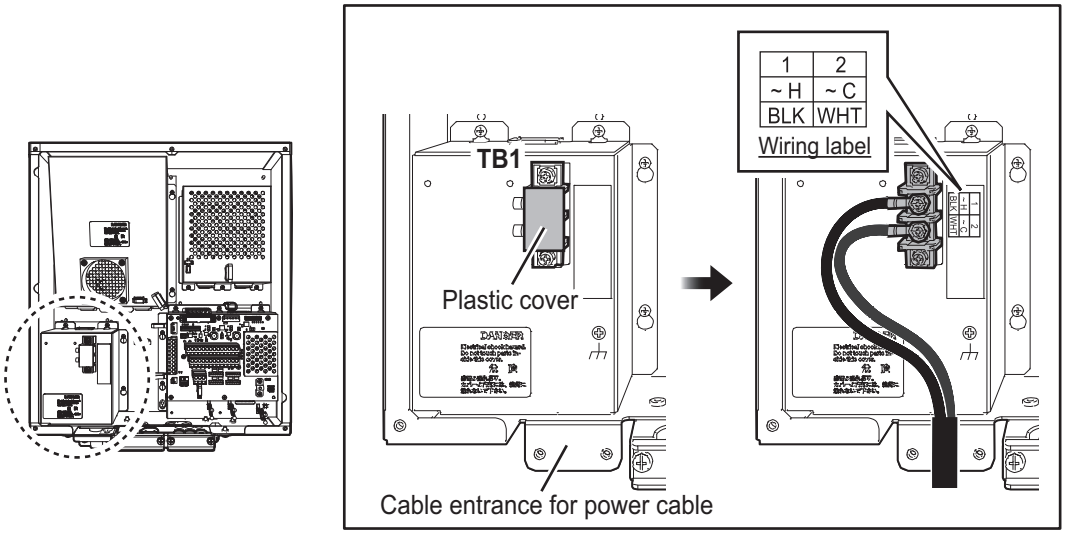

5. Remount the plastic cover and the front cover, then clamp the power cable on the sheath.

Connection of cable for Processor Unit

1. Connect the lines of the cable to the appropriate WAGO connectors (TB704), referring to the interconnection diagram at the back of this manual.
2. Set the cable for Processor Unit on the upper cable entrance as shown below, and fasten the armor part of the cable with the cable clamp.

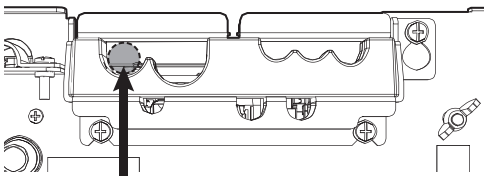

3. Connect the lines of the cable for Processor Unit as shown below through the wiring clamp (B).
   - Serial lines: TB704
   - Shield line: Screw (A)
   - LAN cable: J503

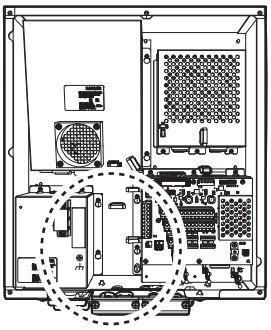

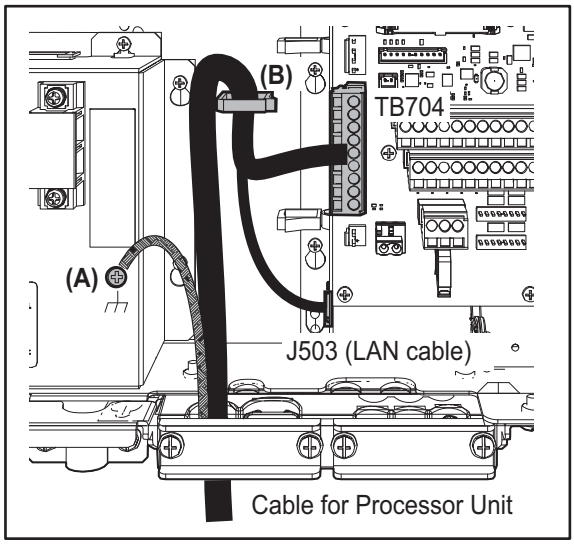

Connection of cable for Control Unit

1. Connect the lines of the cable to the appropriate WAGO connectors (TB711 and TB712), referring to the interconnection diagram at the back of this manual.

2. Set the heat shrinkable part of the cable for Control Unit on the appropriate lane on the lower cable entrance, as shown below. Fasten the copper part of the cable with the cable clamp.

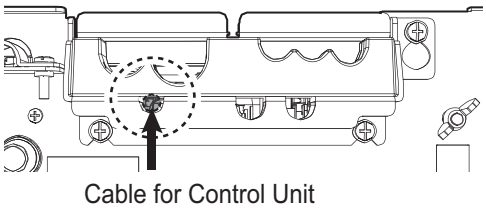

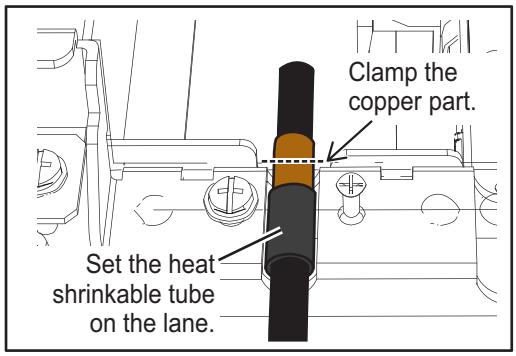

3. Connect the cable for Control Unit to the connectors (TB711 and TB712) through the appropriate wiring clamps (A) and (B).

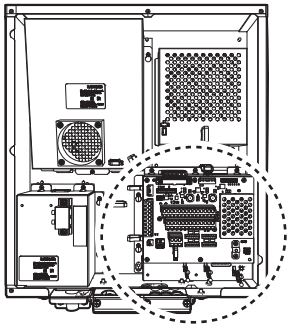

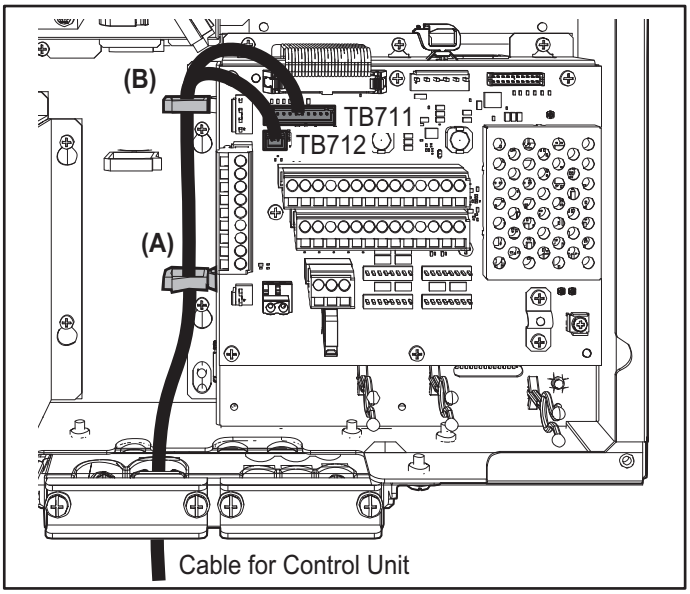

Connection of cable for sub monitor

Up to four cables (RW-00136, RW-4864) can be uses as sub monitor cables. Set their cables on the specified cable entrance as shown in the figure to the right.

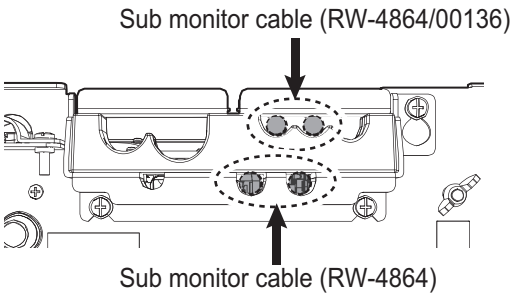

1. Set the shield part of the sub monitor cables on the appropriate lanes on the upper/lower cable entrances as shown below. Fasten the shield part of the cable with the cable clamp.

2. Connect the sub monitor cables to the connectors. The cable for input signal of an external radar should be connected to the connector J710.
   - RW-4864 on the **upper** entrances: max. two lines through the wiring clamps (A) and (B) to two of connectors J708, J709, J710 or J717. See the dashed lines in the figure below.
   - RW-4864 on the **lower** entrances: max. two lines through the wiring clamps (B) to (E) to two of connectors J708, J709, J710 or J717. See the solid lines in the figure below.
   - RW-00136 on the **upper** entrances: max. two lines through the wiring clamps (C) to (E) to two of connectors J708, or J710.

For **RW-4864** cable

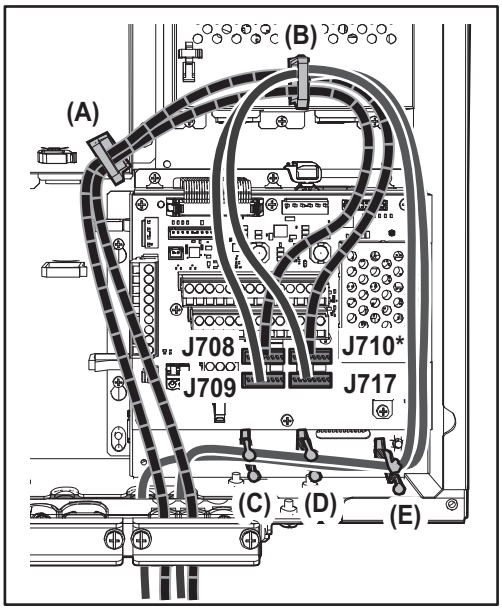

For **RW-00136** cable (from upper entrance)

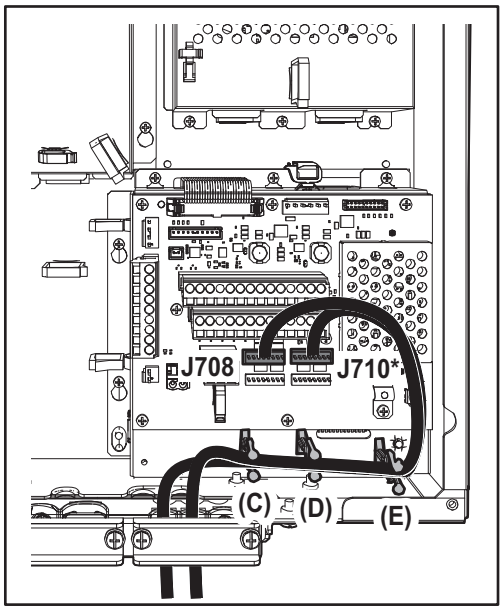

*: For cable for “input” signal of an external radar, connect to J710.

2.7 Transceiver Unit

The TR-DOWN radar requires the transceiver unit as follows:

- Transceiver Unit RTR-108 for X-band radar (FAR-2328W)
- Transceiver Unit RTR-109 for S-band radar (FAR-2338SW)

2.7.1 How to fabricate the cables

For how to connect the LAN modular plug, see "LAN cable" on page 2-5. For how to connect the WAGO connector, see "WAGO connector" on page 2-6.

TTYCYSLA-10 (for serial cable)

Clamp the armor with the cable clamp.

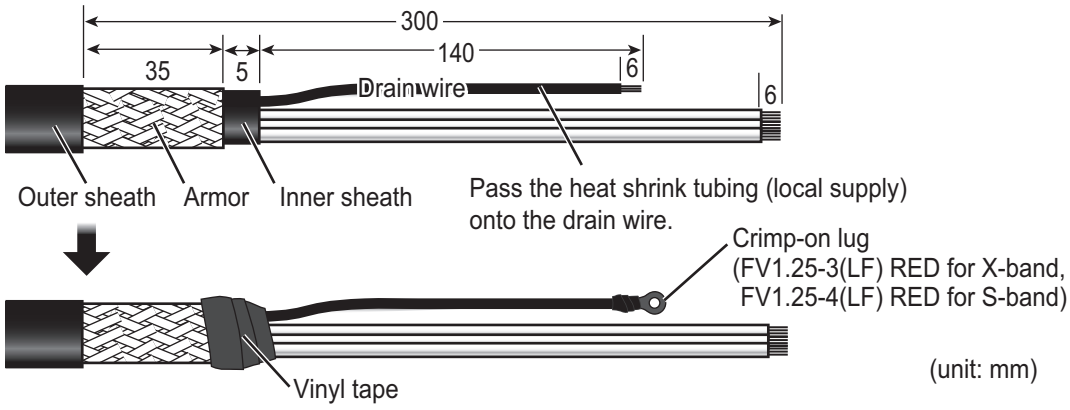

RW-00135

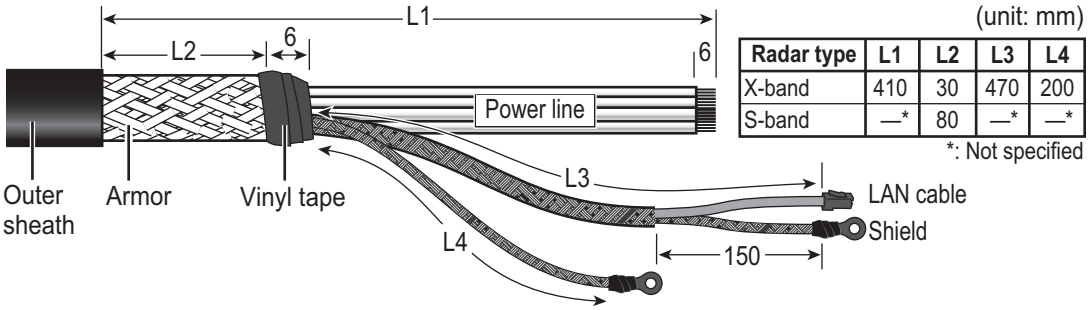

(unit: mm)

Radar type	L1	L2	L3	L4
X-band	410	30	470	200
S-band	—*	80	—*	—*

*: Not specified

S03-92-15/30/40/50 (RW-00136 + connector, for a sub monitor)

Note: The maximum cable length is 50 m.

Clamp the armor with the cable clamp.

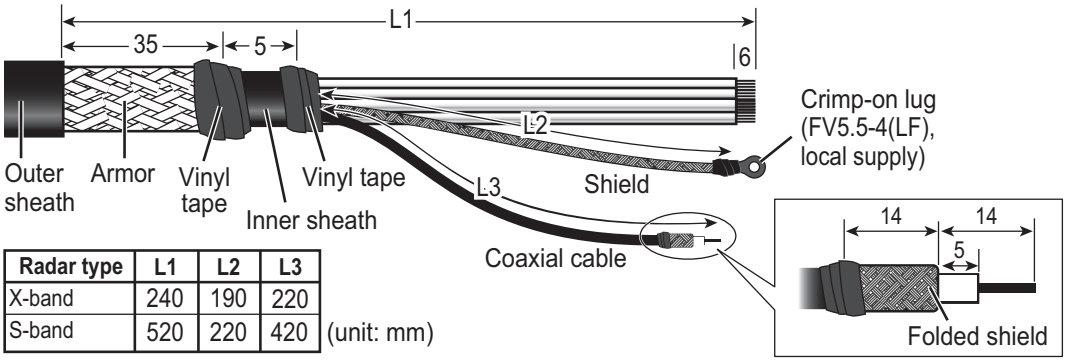

Radar type	L1	L2	L3
X-band	240	190	220
S-band	520	220	420

(unit: mm)

2.7.2 How to connect the cables from X-band radar antenna

Antenna cable, serial cable, sub monitor cable

1. Loosen eight bolts then remove the cover of the unit.

2. Unfasten three bolts from the cable clamp. Lay the cables in respective cable slots so their armors rest in the slots.

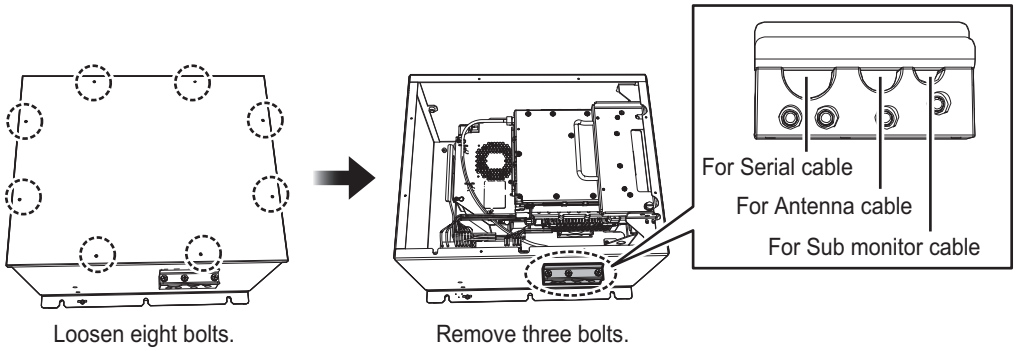

3. Attach the appropriate WAGO connectors (pre-attached) to the appropriate cables, and then connect the antenna, sub monitor and serial cables to the RF-TB Board shown in the following figure. For how to connect the WAGO connector, see "WAGO connector" on page 2-6. For pin arrangement, see the interconnection diagram at the back of this manual.

   Note 1: Make sure to pass the cable through the specified locking wire saddle.

   Note 2: A terminal opener is provided on the RF-TB Board.

   - Destination of Antenna cable
     Power line: TB801 through the locking wire saddle (A).
     LAN cable: J821 through the locking wire saddles (A and B, three places.)
     Shield of power line: Screw (C)
     Shield of LAN cable: Screw (D)

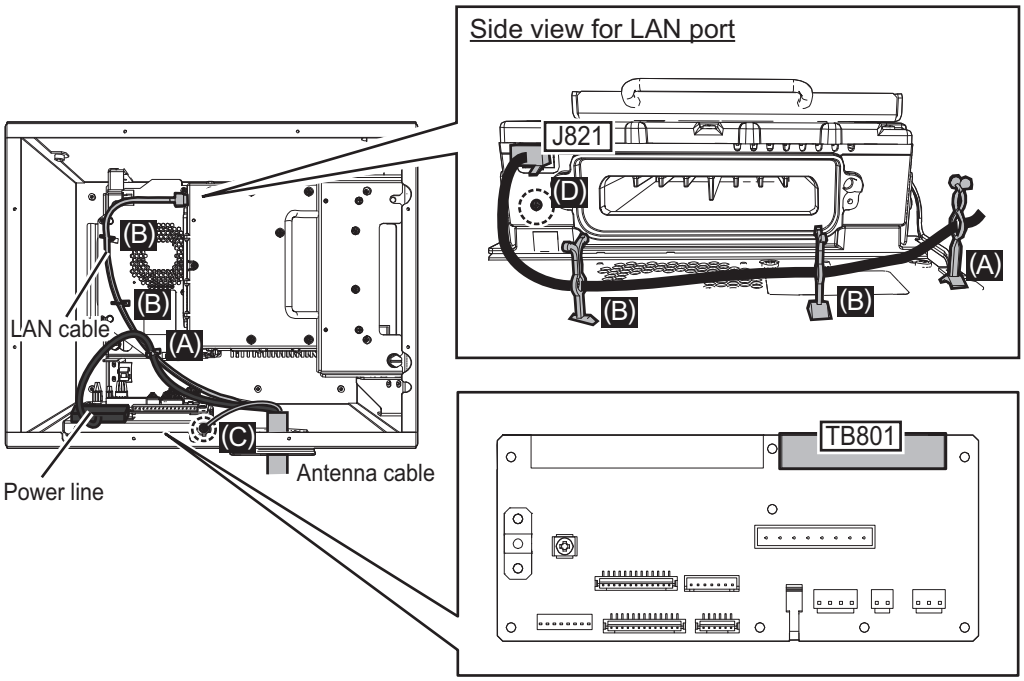

   - Destination of cable for the sub monitor
     Signal line: TB803 through the locking wire saddle (A).
     Coaxial cable: TB804
     Shield of signal cable: Screw on fixing plate (C)

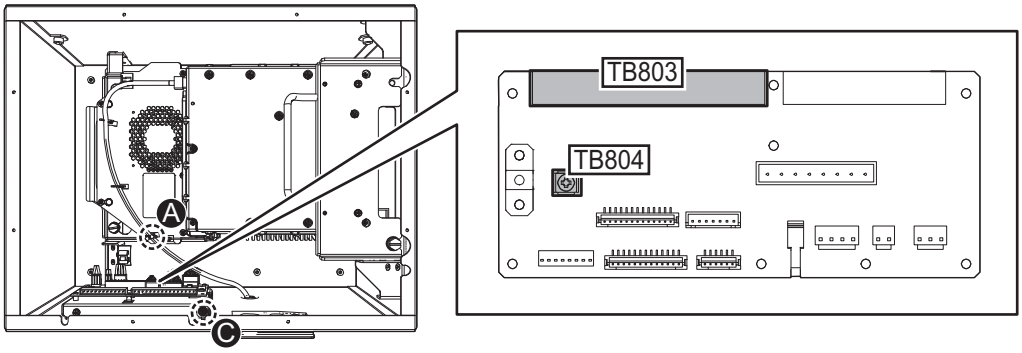

- Destination of Serial cable from the Antenna Unit
  Serial cable: TB802 and TB803 through the locking wire saddle (A).
  Shield of serial cable: Screw on fixing plate (C)

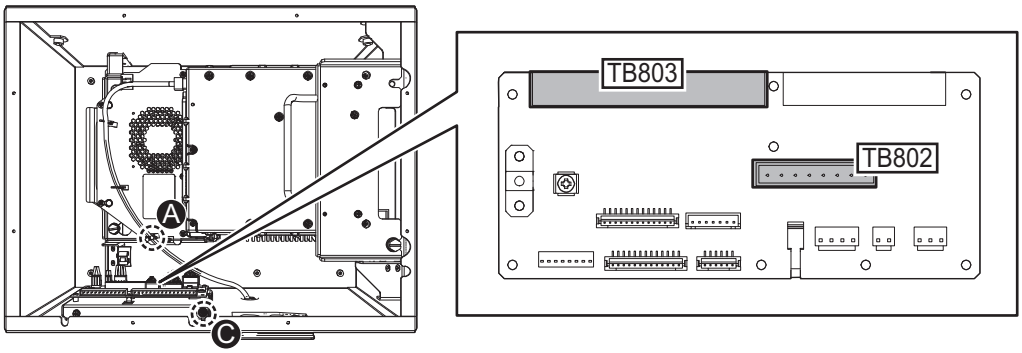

4. Bind all cables with cable ties supplied locally (two places).

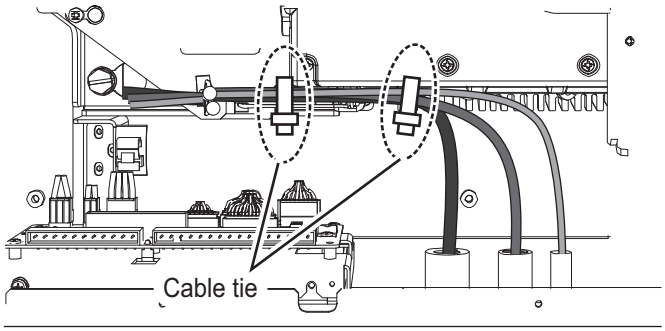

5. Check that armor of cables are lying in their respective cable slots then fasten the cable clamp.

Flexible waveguide (FR-9)

The RF interconnection between the Antenna Unit and the transceiver can be made with a flexible waveguide (FR-9). If the rectangular waveguide is used, observe the following installation guidelines.

- Correctly installed waveguide runs ensure the most efficient transmission of electrical energy at high frequencies. Electrical losses, however, occur in the waveguide runs. To minimize them the following factors are of great importance: minimum length, airtightness and electrical continuity.
- Another consideration required is that of frequency disturbance. The transmitting valve, a magnetron, is the primary oscillator in the radar. This is different from the oscillation system at lower frequencies in which conventional radio valves are used. In the latter case, the primary oscillator is always protected from the effects of load impedance by a buffer stage so that frequency and waveform are left unobstructed.

With a waveguide and magnetron, however, mismatch of impedance causes “frequency pulling.” For this reason, the number of possible mismatches in a waveguide run, i.e., joins and bends, must be kept minimum.

- Each pair of flanges should be coupled with one O-ring, four bolts and spring washers and the choke flange must be in the upper position. The bolts and O-ring must be greased before insertion to facilitate removal if required at a later date.
- The transceiver unit output flange is a plain type and the Antenna Unit output flange is a choke type, and it is important to maintain this relationship throughout the waveguide run.

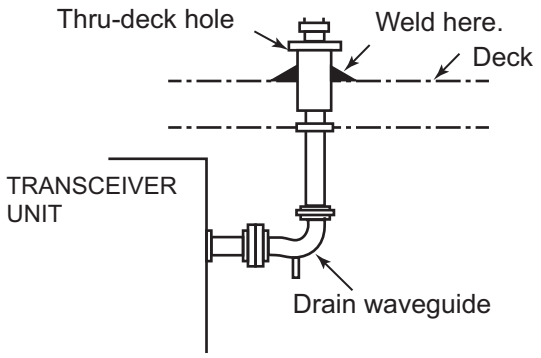

- After installation of the waveguide is completed, the coupling portions must be sealed by using the adhesive supplied.
- In a very short time the surface of the waveguide becomes green with verdigris. Therefore, paint both the surface of the waveguide and flanges to avoid corrosion and water penetration. Paint must not be allowed to reach the inner surface of the waveguide or the mating surface of any flange.

2.7.3 How to connect the cables from S-band radar antenna

Antenna cable, serial cable, sub monitor

1. Loosen eight bolts then remove the cover of the unit.
2. Unfasten three bolts from the cable clamp. Lay the cables in their cable slots so their armors rest in the slots.

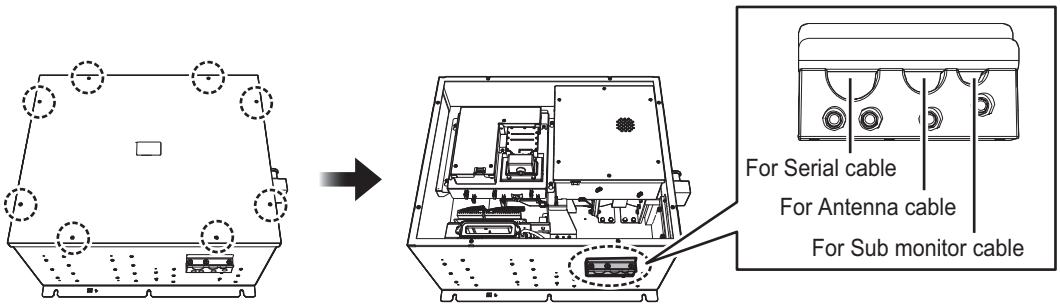

Loosen eight bolts. Remove three bolts.

3. Attach the appropriate WAGO connectors (pre-attached) to the appropriate cables, and then connect the antenna, sub monitor and serial cables to the RF-TB Board shown in the following figure. For how to connect the WAGO connector, see "WAGO connector" on page 2-6. For pin arrangement, see the interconnection diagram at the back of this manual.
   Note 1: Make sure to pass the cable through the specified locking wire saddle.
   Note 2: A terminal opener is provided on the RF-TB Board.

- Destination of Antenna cable
  Power line: TB801 through the locking wire saddle (A).
  LAN cable: J821 through the locking wire saddle (A)
  Shield of power line: Screw (C)
  Shield of LAN cable: Screw (D)

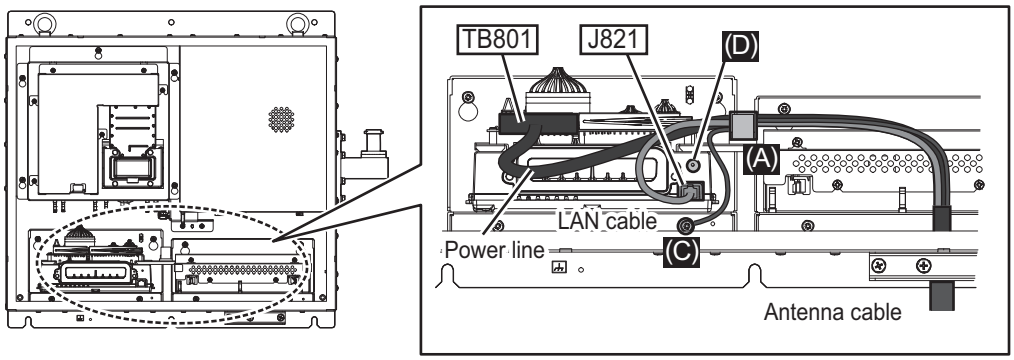

- Destination of sub monitor cable
  Signal line: TB803 through the locking wire saddle (A), see the figure for the "Destination of Antenna cable:"
  Coaxial cable: TB804 (B)
  Shield of signal line: Screw (C)

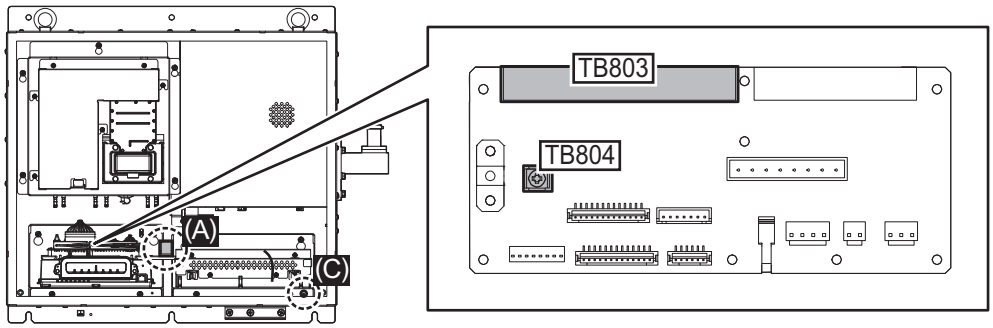

- Destination of Serial cable from the Antenna Unit
  Serial cable: TB802 and TB803 through the locking wire saddle (A).
  Shield of serial cable: Screw on fixing plate (D)

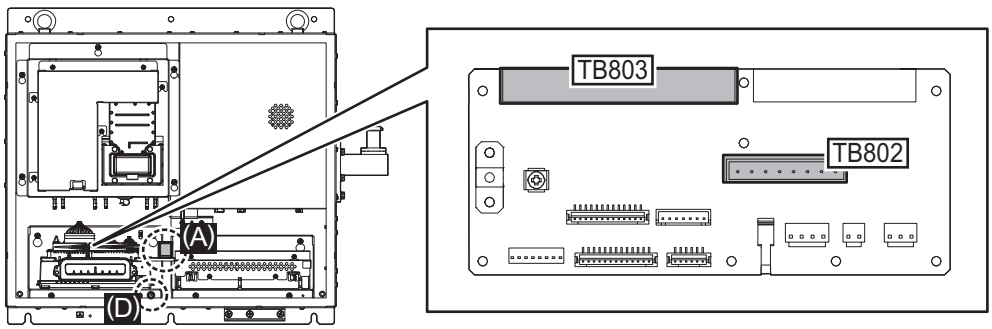

4. Bind all cables with cable ties supplied locally (two places).

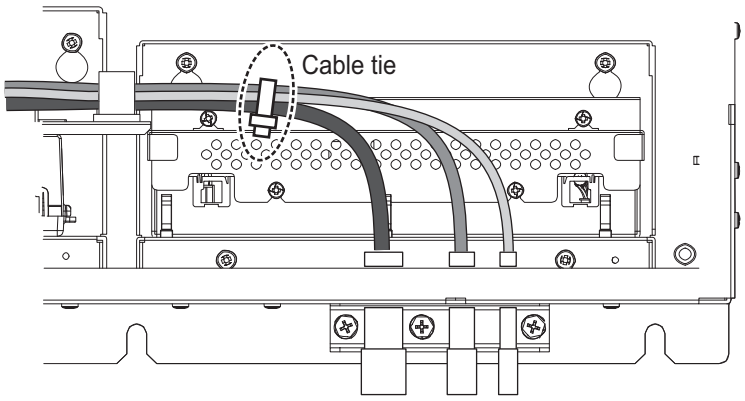

5. Check that armor of cables are lying in their respective cable slots then fasten the cable clamp.

Microwave coaxial plug

Attach the microwave coaxial plug to the coaxial cable. See the applicable FURUNO technical information for the procedure. Attach the coaxial cable assembly to the transceiver unit as follows:

1. Unfasten four bolts (M6×10) to remove the dust cover from the output WG adapter.
2. Fasten eight bolts (removed at step 1) to attach the flange to the transceiver unit.
3. Attach the coaxial cable to the converter of the flange.

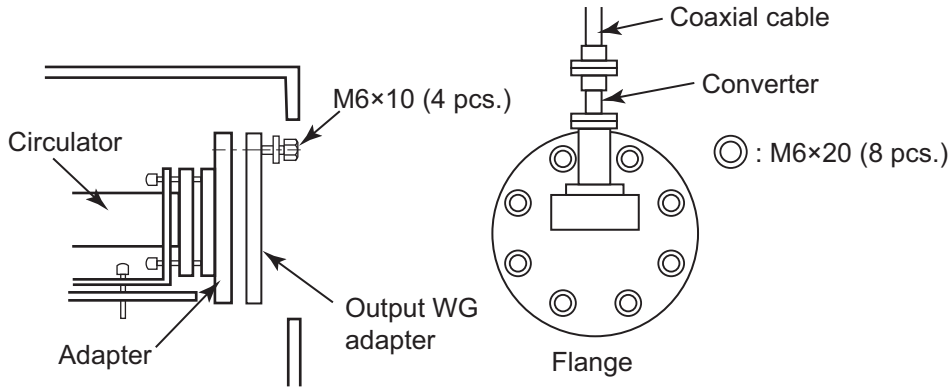

Transceiver unit, inside view

2.8 Processor Unit

2.8.1 How to fabricate cables

For locations of cables and cores, see the sticker on the reverse side of the top cover. (All dimensions in millimeters)

For how to connect the LAN modular plug, see "LAN cable" on page 2-5. For how to connect the WAGO connector, see "WAGO connector" on page 2-6.

RW-00135/RW-00339 (for Antenna cable)

Note: For the 1.5 m of RW-00339 cable (for FAR-2x58 radars), fabrication is not required.

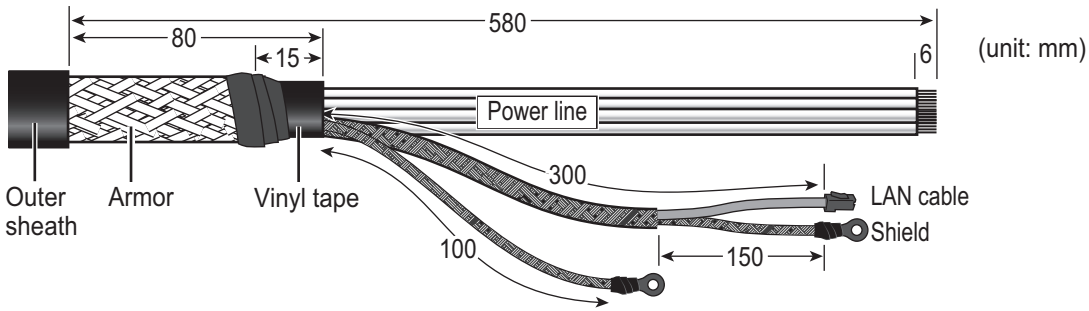

RW-9600/6895/4873 (for retrofit or foremast installation)

The existing cable can be used for the following cases. In these cases, the optional LAN Signal Converter is required. See section 2.10 "LAN Signal Converter" for details.

- Cable extension for foremast installation (For X-band of FAR-2x18/2x28/2x38 radars, TR-UP radar only)
- Retrofit (For X-band/S-band of FAR-2x18/2x28/2x38 radars, TR-UP radar only)

Note: The maximum antenna cable length is 100 m for RW-9600, 50 m for RW-6895/4873. If the existing antenna cable is longer than the above maximum length, replace the antenna cable with RW-00135.

The unused power lines are tied up and attached to the crimp-on lug FV5.5-S4 (LF), supplied locally. Connect these unused lines to the ground terminal with the shield line. See the interconnection diagram at the back of this manual for details.

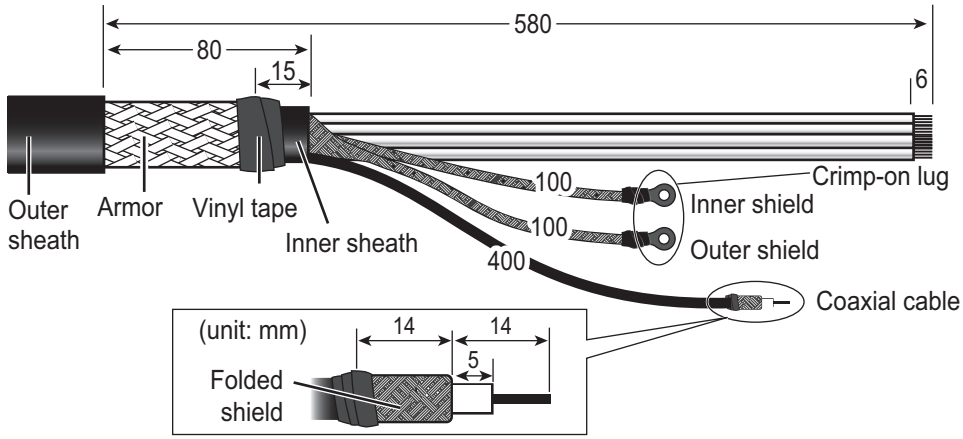

DPYC-2.5/6 cable (for Power)

Clamp the sheath with the cable clamp. For the supplied crimp-on lugs, use FV2-4 for AC power cable, FV5.5-4 for DC power cable.

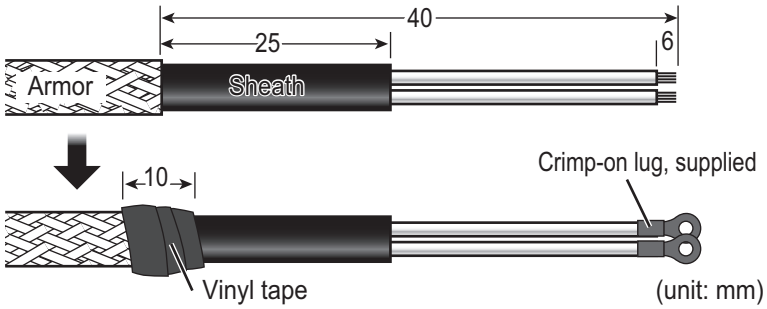

TTYCSLA series cable (for serial)

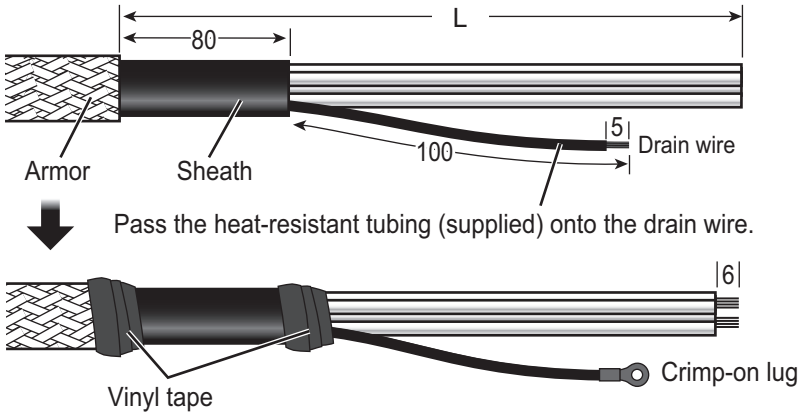

(unit: mm)

Cable type (JIS)	L
TTYCSLA-1Q	590
TTYCSLA-4	720
TTYCSLA-7	570

2.8.2 How to connect cables inside the Processor Unit

Connect the ground wire between the ground terminal on the chassis and the ship's earth.

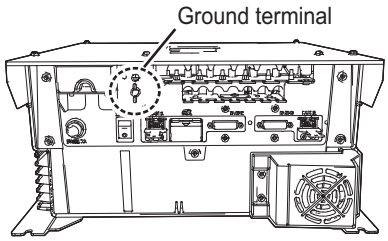

How to open/close the top cover

Unfasten six screws (M4×8) to open the top cover from the Processor Unit.

After the appropriate cable connections are completed, fasten six screws to close the top cover.

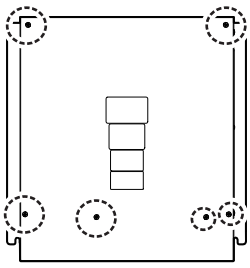

Connection of Antenna cable

For existing antenna cable, see section 2.10 "LAN Signal Converter".

1. Remove the spacers to pass the antenna cable on the upper plate.

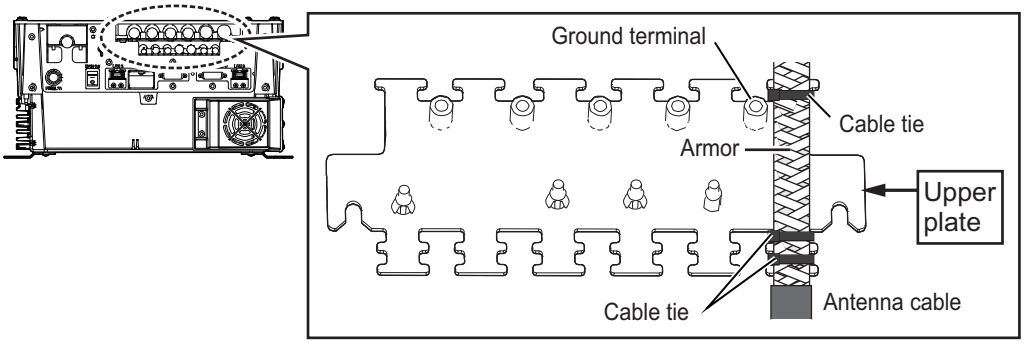

2. Fasten the cable to the post part of the plate with a cable tie (local supply).
   Note: Be sure the vinyl sheath of the cables is on the post.
3. Pass the cable to connect the WAGO connector on the TB Board 03P9648 through the locking wire saddles as below.
   For retrofit, the extra cables should be grounded on the ground terminal shown as below. For the connection between the BNC case and the coaxial cable, see section 2.10.3.

For RW-00135/00339 cable

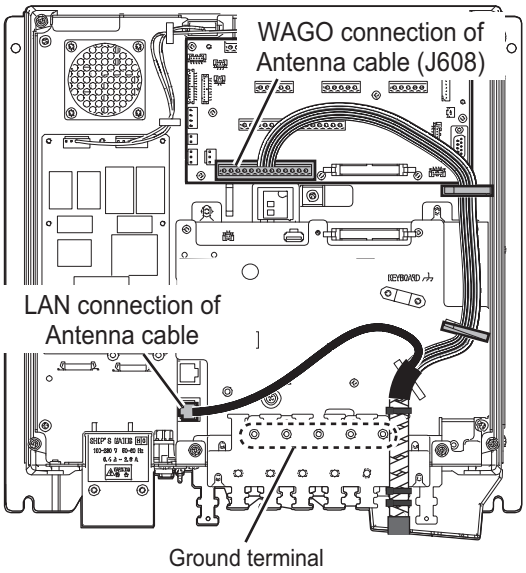

For retrofit cable

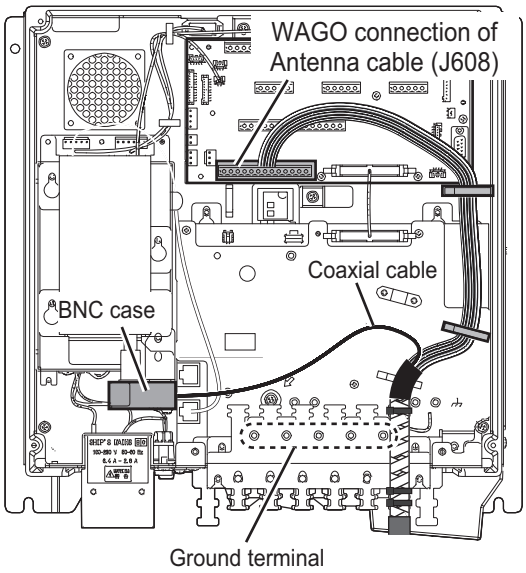

4. Connect the shield line of the antenna cable to the nearest ground terminal on the plate.

Connection of Power cable

1. Unfasten two screws to open the power cable cover.
2. Remove the plastic cover and cable clamp to pass the power cable.
3. Connect the cable to the terminal with the pre-attached crimp-on lugs. Clamp the power cable on the sheath.
   Note: For DC power specifications, the Processor Unit does not have the main switch. Connect each polarity (1: +, 2: –) of the cable correctly to the terminal board.