FURUNO

Installation Manual
RADAR SENSOR
Model DRS4DL X-Class

SAFETY INSTRUCTIONS i
SYSTEM CONFIGURATION iv
EQUIPMENT LISTS v

1. INSTALLATION 1
1.1 Installation Considerations 1
1.2 Necessary Tools and Materials 3
1.3 Installation of the Antenna Unit (Radar Sensor) 4

2. INITIAL SETUP 8
2.1 Connections 8
2.2 Checks After Installation 8

3. MAINTENANCE, TROUBLESHOOTING 11
3.1 Maintenance 11
3.2 Troubleshooting 12
3.3 Replacement of Fuse 13
3.4 Replacement of Parts 13

APPENDIX 1 RADIO REGULATORY INFORMATION AP-1
SPECIFICATIONS SP-1
PACKING LIST(S) A-1
OUTLINE DRAWING(S) D-1
INTERCONNECTION DIAGRAM(S) S-1

FURUNO ELECTRIC CO., LTD.

www.furuno.com

All brand and product names are trademarks, registered trademarks or service marks of their respective holders.

SAFETY INSTRUCTIONS

Follow the safety instructions listed below and throughout this manual to prevent damage to your equipment or vessel and to prevent harm to the operator or other personnel on-board. The results of failing to follow the instructions and guidelines outlined herein are listed below.

WARNING	Indicates a potentially hazardous situation which, if not avoided, could result in death or serious injury.
CAUTION	Indicates a potentially hazardous situation which, if not avoided, can result in minor or moderate injury.

Warning, Caution Prohibitive Action Mandatory Action

WARNING

Radio Frequency Radiation Hazard

The radar antenna sends the electromagnetic radio frequency (RF) energy. This energy can be dangerous to you, especially your eyes. Do not look at the radiator or near the antenna when the antenna is rotating.

The distances at which RF radiation levels of 100 W/m^2, 50 W/m^2 and 10 W/m^2 exist are shown in the table below.

Note: If the antenna unit is installed at a close distance in front of the wheel house, prevent the transmission in that area to protect passengers and crew from microwave radiation. See Sector Blanking in chapter 2.

Distance to 100 W/m^2 point	Distance to 50 W/m^2 point	Distance to 10 W/m^2 point
N/A	N/A	0.73 m

Do not open the equipment.

This equipment uses high voltage electricity which can shock, burn or cause serious injury. Only qualified personnel can work inside the equipment.

Wear a safety belt and hard hat when working on the antenna unit.

Serious injury or death can result if someone falls from the radar antenna mast.

Do not disassemble or modify the equipment.

Fire, electrical shock or serious injury can result.

WARNING

To prevent falls when working at heights, secure a service scaffolding or landing at the installation location of the antenna.

For the power supply, use a voltage suitable for the rated voltage of the device.

Using a voltage outside the rated voltage may cause a fire or equipment failure.

Turn off the power at the mains switchboard before beginning the installation.

Fire, electrical shock or serious injury can result if the power is left on or is applied while the equipment is being installed.

Turn off the power immediately if water leaks into the equipment or the equipment is emitting smoke or fire.

Continued use of the equipment can cause fire or electrical shock.

Use the specified power cable.

Fire or damage to the equipment can result if a different cable is used.

Use the correct fuse

Use of a wrong fuse can result in damage to the equipment.

⚠ WARNING

Observe the following safe compass distances to prevent interference to a magnetic compass:

Unit	Standard Compass	Steering Compass
Antenna unit	1.25 m	0.75 m

⚠ CAUTION

Install the antenna where only technicians can access it, such as the radar mast.

To turn the power of this unit on or off, connect it to the onboard power supply via a disconnection device such as a breaker.

Ground the equipment to prevent electrical shock and mutual interference.

Follow the instructions in this manual to ensure that the equipment is properly installed and that all related equipment is properly connected.

⚠ CAUTION

In some countries a radio license is required to install a radar.

For details, contact a FURUNO agent or dealer.

The data presented by this equipment is intended as a source of navigation information.

The prudent navigator never relies exclusively on any one source of navigation information, for safety of vessel and crew.

Do not use high-pressure cleaners to clean this equipment.

This equipment has the waterproof rating outlined in the equipment specifications. However, the use of high-pressure cleaning equipment can cause water ingress, resulting in damage to, or failure of, the equipment.

Target Tracking (TT) safety information

⚠ WARNING

The TT function is a valuable aid to navigation. However, the navigator must check all aids available to avoid collision.

- The TT automatically tracks an automatically or manually acquired radar target and calculates its course and speed, indicating them with a vector. Since the data generated by the TT depends on the selected radar targets, the radar must be optimally tuned for use with the TT, to ensure required targets will not be lost or unnecessary targets, like sea returns and noise, will not be acquired and tracked.

- A target is not always a landmass, reef, ship, but can also be returns from the sea surface and from clutter. As the level of clutter changes with the environment, the operator must correctly adjust the sea and rain clutter controls and the gain control so that the target echoes do not dis-appear from the radar screen.

⚠ CAUTION

The plotting accuracy and response of this TT meets IMO standards. Tracking accuracy is affected by the following:

- Tracking accuracy is affected by course change. One to two minutes is required to restore vectors to full accuracy after an abrupt course change. (The actual amount depends on gyrocompass specifications.)

- The amount of tracking delay is inversely proportional to the relative speed of the target. Delay is approx. 15-30 seconds for the higher relative speed; approx. 30-60 seconds for the lower relative speed. The following factors can affect accuracy:
  - Echo intensity
  - Radar transmission pulse length
  - Radar bearing error
  - Heading sensor error
  - Course change (own ship and targets)

Warning Label(s)

Warning label(s) is(are) attached to the equipment. Do not remove the label(s).
If a label is missing or damaged, contact a FURUNO agent or dealer about replacement.

⚠ WARNING ⚠	⚠ 警 告 ⚠
To avoid electrical shock, do not remove cover. No user-serviceable parts inside.	感電の恐れあり。 サービスマン以外の方はカバーを開けないで下さい。内部には高電圧部分が数多くあり、万一さわると危険です。

Name: Warning Label (2)
Type: 03-129-1001-3
Code No.: 100-236-743

Program No.

• 0359571-01.**
  ** Denotes minor modifications.

Disclosure of Information about China RoHS

With regards to China RoHS information for our products, please refer to our website (www.furuno.com).

SYSTEM CONFIGURATION

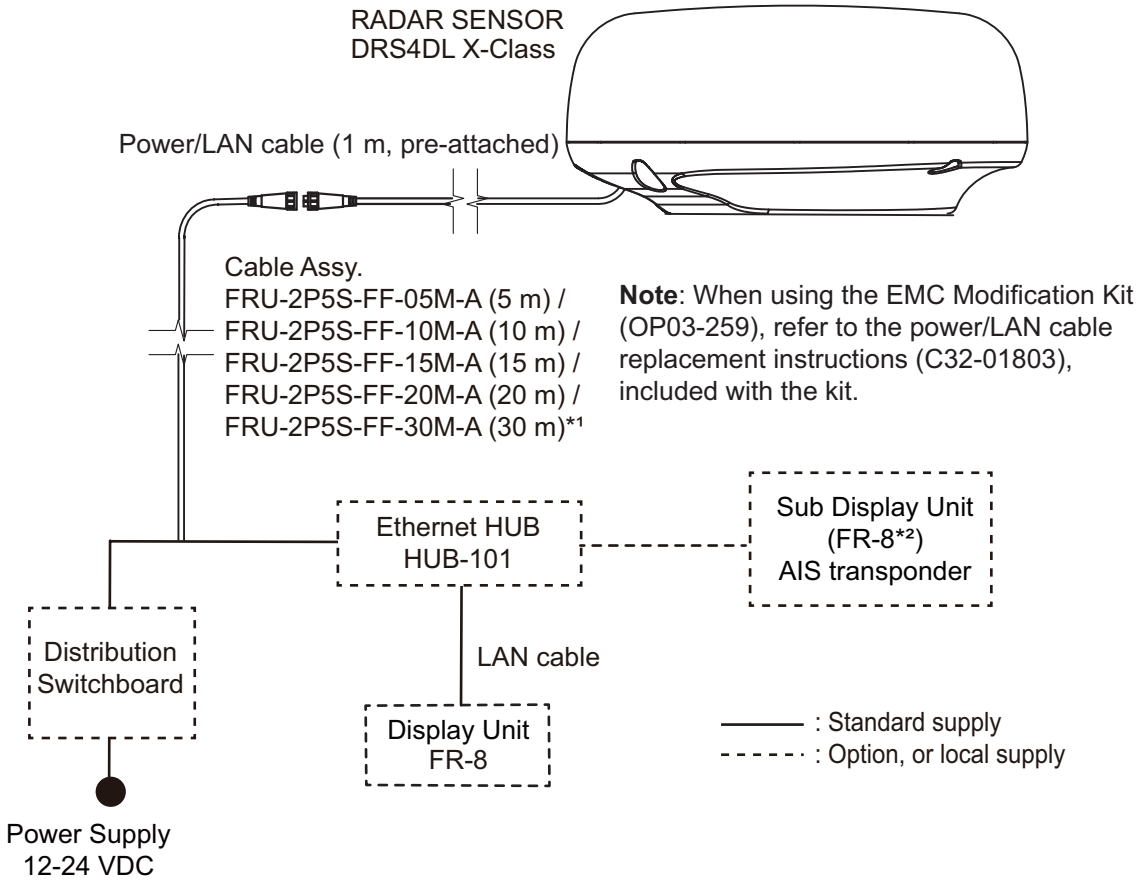

*1: When you connect power supply (12VDC), you can not use the cable (30 m).
*2: Three FR-8s can be connected including the main display unit.

EQUIPMENT LISTS

Standard supply

Name	Type	Code No.	Qty	Remarks
Radar Sensor	RSB-150-136	-	1	
Installation Materials*	CP03-38540	000-039-412	Select one	Power/LAN cable 5 m
	CP03-38500	000-035-186		Power/LAN cable 10 m
	CP03-38510	000-035-187		Power/LAN cable 15 m
	CP03-38520	000-035-188		Power/LAN cable 20 m
	CP03-38530	000-035-189		Power/LAN cable 30 m
Spare Parts	SP03-19401	001-552-160	1	Fuses (FRU-60C-FU-5A)

Optional supply

Name	Type	Code No.	Remarks
EMC Modification Kit*	OP03-259-1	001-524-010	w/10 m cable
	OP03-259-2	001-524-020	w/15 m cable
	OP03-259-3	001-524-030	w/20 m cable
	OP03-259-4	001-524-040	w/30 m cable
Water Proof Kit	OP03-275	001-642-600	Waterproofing rating becomes IPX2when the mast tilts.

*: Equip with either the standard supplied cable (FRU-2P5S-FF-**M-A) or the cable of the EMC Modification Kit. DRS series (except DRS4D) cables can also be used. DRS4DL X-Class is also compatible with the cables of the DRS series (except DRS4D).

1. INSTALLATION

1.1 Installation Considerations

NOTICE

Do not use paint, anti-corrosion products, contact spray or other items containing organic solvents on the equipment.

Organic solvents can harm paint and plastic, particularly the connectors.

- To ensure proper emission of radar waves, do not paint the radome.
- To prevent the degradation, do not use the anti-corrosion products for the bolt.
- Install the unit on a common mast, radar mast, etc.
- Make sure the mounting location does not allow water to accumulate on the mounting platform.
- Do not cut the power/LAN cable.

Distribution switchboard

This antenna unit does not have a power switch. Connect to the onboard power supply via a distribution switchboard so that the power to the antenna unit can be turned on/off.

Mounting position

- The antenna unit is mounted on a radar arch, a common mast or radar mast, a dedicated mounting base, etc.

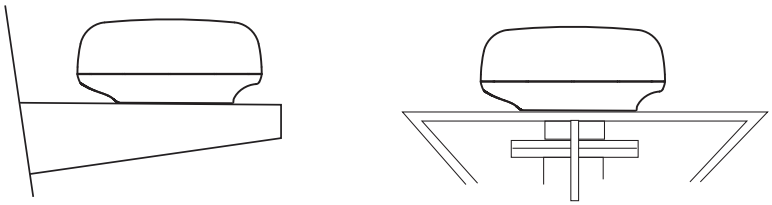

(a) Common mast (b) Radar mast

- Install the antenna unit in a place with a good view as much as possible and no obstruction around the unit. Select a place where there is no chimney or mast in the bow direction. If there are obstacles, a blind spot for radio waves will occur and no images will appear on the display in that area. In addition, the performance of the antenna unit (beam width and side lobe level) may be reduced, and false images may appear. A mast with a diameter smaller than the radiation width of the antenna unit will produce a small blind spot, but if there is a horizontal plane at the same height as the antenna unit, a large blind spot will result. Choose a position that is well above the horizontal plane.
- Select a location near the radar (within 1 m in diameter) where there are no large structures such as masts.

- It is almost impossible to install the antenna unit in a place where there are no obstacles all around. When checking the operation, check if there is a blind spot. if there is a blind spot, note the direction.

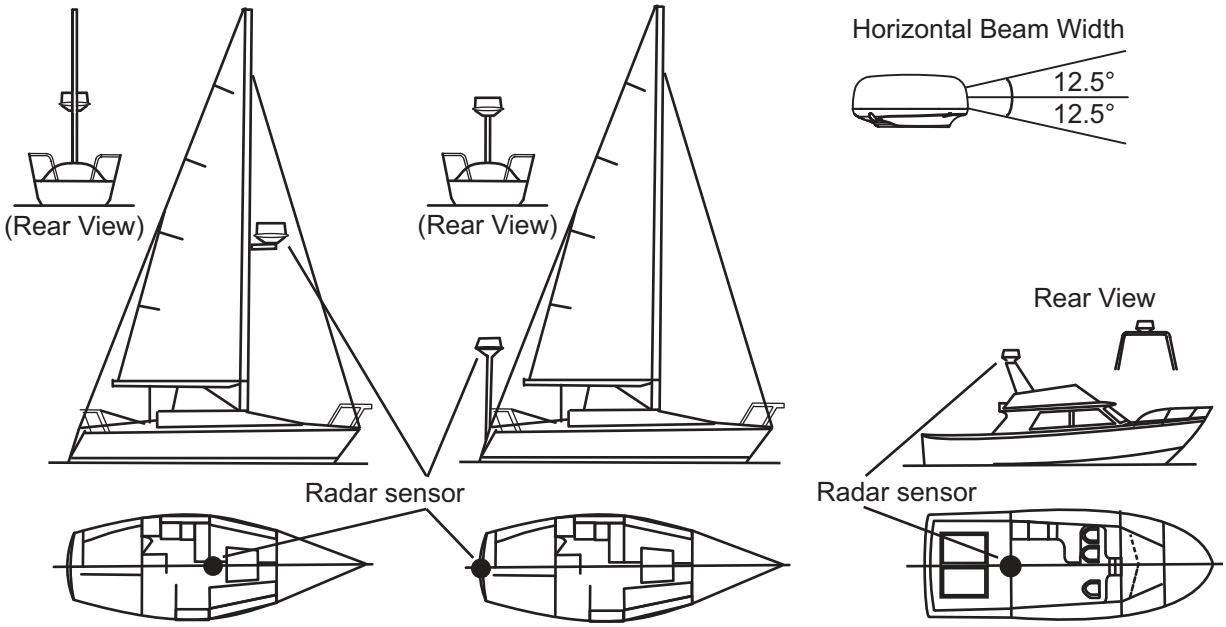

Installation on a sailboat *Installation on a powerboat*

- Avoid mounting directly above the cabin where crew (occupants) are present, as the motor drive noise of the antenna may echo inside the cabin.

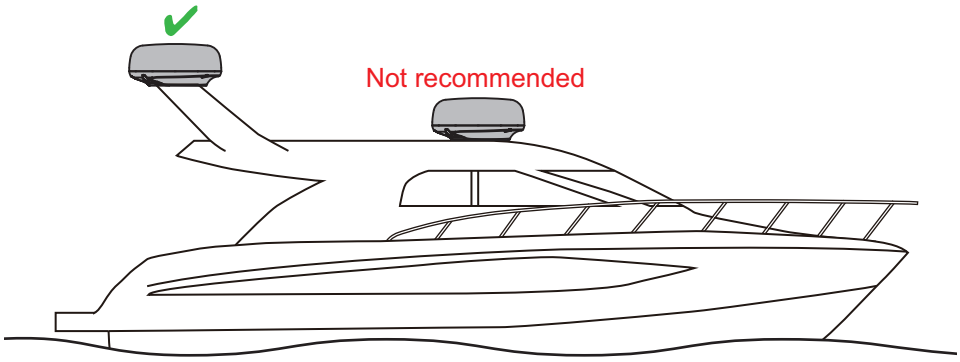

- Observe the compass safe distances mentioned in the safety instructions, to prevent interference to a magnetic compass.
- Referring to the outline drawings at the back of this manual, allow space for maintenance and service.
- The antenna unit should not be operated or stored in any position other than the proper operational position (upright).

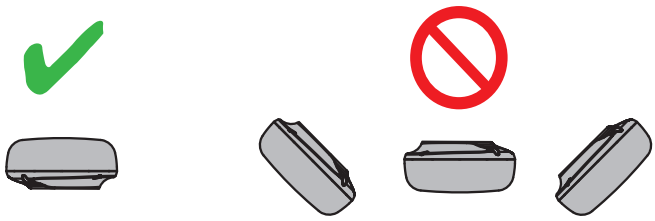

Installation with radio equipment

- Install the antenna unit away from radio antennas (SSB, VHF, Inmarsat) and GPS antenna.
- Install the antenna unit away from radio receivers to prevent electromagnetic interference to the radio.

Cabling

- To prevent noise, do not lay the cables of this unit near or in parallel with the power cables of other electronic devices.
- When laying the cable of the antenna unit in parallel with the cables of radio equipment, use the cable supplied with the EMC Modification Kit and separate all cables at least 1.5 m from one another.
- Be sure that the power/LAN cable and cable assembly are not run parallel to each other. Also, locate those cables well away from other signal cables and antennas.

Installation on large vessels

- The antenna unit cable comes in lengths of 5, 10, 15, 20 and 30 m (default selection). Consider the length of the cable when selecting a mounting location.
- Keep the unit away from smoke and exhaust stacks. Hot air affects antenna performance. Hot air can also damage the unit. The temperature at the mounting location should not exceed 55°C (131°F).

1.2 Necessary Tools and Materials

The following tools are necessary to complete the installation.

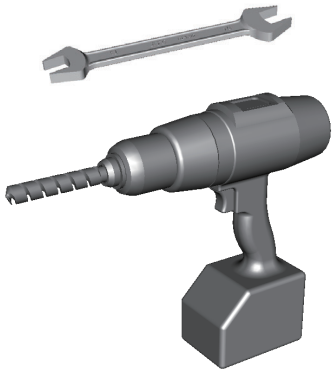

Name	Usage
Electric drill, Drill bit	Drill holes for mounting. Drill bit: ϕ11 mm
Hexagonal wrench	For fastening bolts (M10).
Self-bonding tape*	For waterproofing connector junction.
Vinyl tape*	
Cable tie*	For securing cable.
Marine sealant	For preventing bolt corrosion.

*: For aesthetic reasons, it is recommended to use the same color (black) tape and cable tie as the power/LAN cable.

1.3 Installation of the Antenna Unit (Radar Sensor)

Determine the suitability of the mounting location BEFORE permanently mounting the sensor. Incoming and outgoing signals may overlap one another depending on the shape of the vessel, preventing communication between the radar and display unit. Set the sensor on the selected location and connect the sensor to the distribution switchboard and display unit. Turn on the sensor and the display unit. Check that the picture is updated with each sweep on the display unit. Some trial and error may be necessary to find a suitable location.

How to fasten the antenna unit to the mounting platform

Referring to the figure below, fasten the antenna unit to the mounting platform.

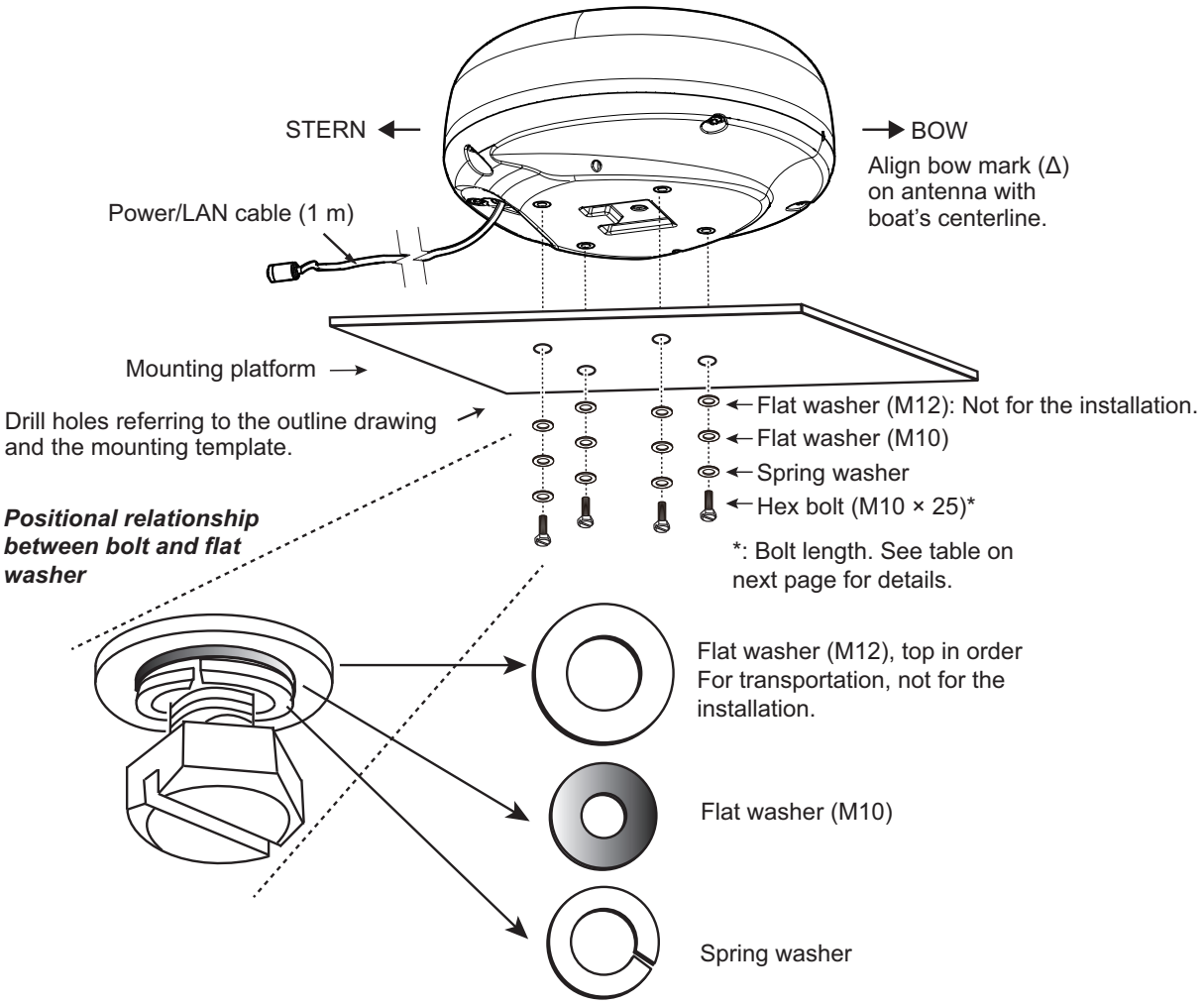

Note: On the bolt and washers,

- DO NOT detach the hex bolts and flat washers until the installation.
- DO NOT turn the radome upside down after detaching the hex bolts and flat washers. The inside of the radome may be damaged.

1. Use the mounting template (supplied) to mark the location of fixing holes in the mounting platform. Be sure to drill the holes parallel with the bow.

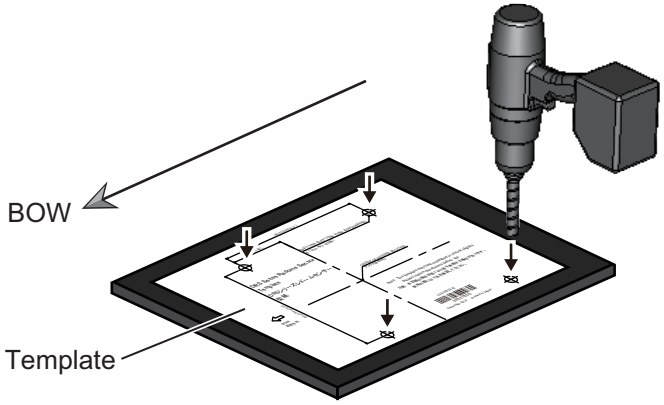

2. Remove hex bolts*, spring washers, flat washers (M10), and flat washers (M12) attached to the bottom of the antenna unit.

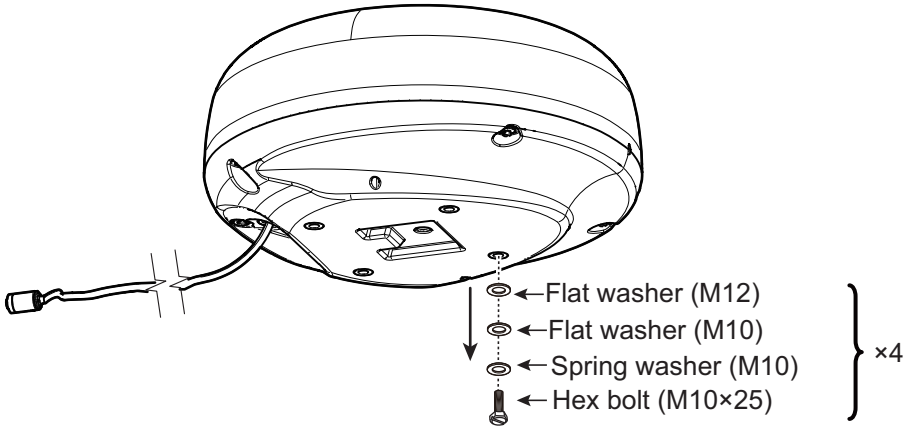

Note: The flat washers (M12) are not used for the installation. Dispose of the flat washers (M12) after removing them from the antenna unit.

3. Lay the antenna unit on the mounting platform with the bow mark (▲) on the antenna unit facing the bow.
4. Fasten the antenna unit to the platform using the hex bolts*, spring washers and flat washers (M10) removed in step 2. The torque for the bolts must be 24.5 N?m. Apply marine sealant (local supply) to the hex bolts, flat washers and spring washers as shown below.
   *: See the table below to determine the bolt length to use.

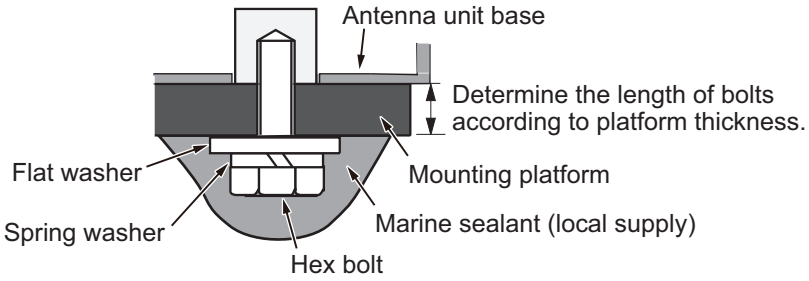

Platform thickness and bolt to use

	Platform thickness	Size of bolts to use
	6 to 10 mm	M10×25 (Shipped with bolts attached to the antenna unit)
	Over 10 mm	Supply locally.

5. Insert a fuse in the fuse holder on the cable, referring to the instructions “HOW TO ATTACH THE FUSE” (C32-01604-**), supplied with the cable. Attach the supplied fuse rating label (5A) on the fuse holder cover.
6. Connect the LAN connector of the cable to the LAN port of FR-8 or the Ethernet Hub. Do not connect to the onboard LAN.

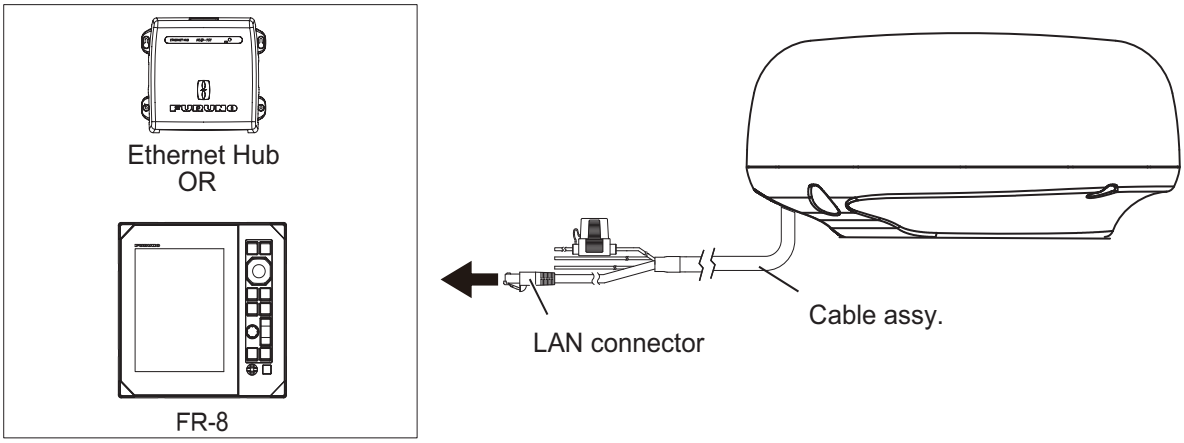

7. Connect the power wires to the ship’s battery (12 VDC or 24 VDC).
   - **Red wire**: Connect to the positive (+) terminal. The red wire has the fuse holder.
   - **Blue wire**: Connect to the negative (-) terminal.
   - **Black wire**: The black wire is a shielding wire for grounding. Connect to ground on the power supply side.

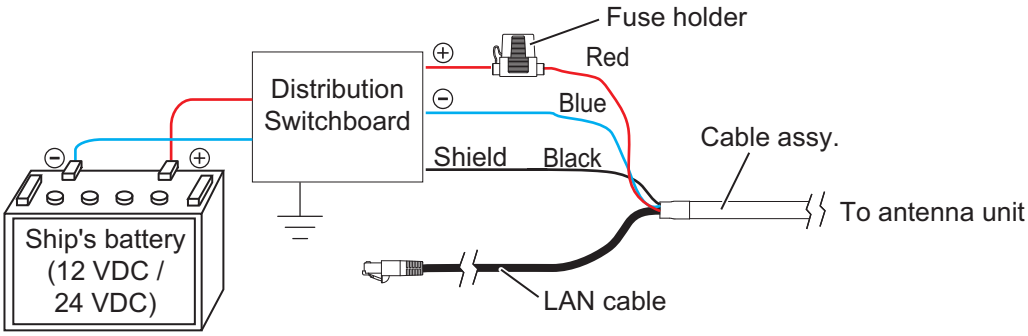

Note 1: There is no power switch on the antenna unit. Connect to the onboard power supply via a distribution switchboard so that you can power the antenna unit on and off. Even when the power to the display unit is turned off, standby power (13W) is generated because the power is supplied to the antenna unit. Be sure to turn off the breaker if you do not use the radar when powering from the battery.

Note 2: The antenna unit cannot accept input voltage of more than 24 VDC.

8. Connect the power/LAN cable from the antenna unit. The connector pin arrangement is as shown to the right. Observe the below guidelines for laying the power/LAN cable.

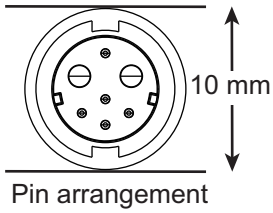

   - Do not fasten the cable to the hull.
   - If radar noise is interfering with VHF radio equipment, use the cable supplied with the EMC Modification Kit in place of the power/LAN cable, and separate the cable at least 1.5 m from all radio cables.

- If waterproofing of FR-8 is required, use a waterproof cable*.When you use the waterproof cable, a joint box* for LAN cable extension is required between DRX4DL X-Class and FR-8.

  *: Waterproof cable and joint box are optional on the FR-8.
- Make sure the cable connector does not strike the hull because of wind, etc.
- If the cable is passed through a mast on a sailboat, be sure the cable does not touch ropes (sheet, halyard, etc.).
- The cable must be secured so no tension is applied to its connectors. As shown in the figure below, create a loop in the cable close to the unit and secure the loop with cable ties.

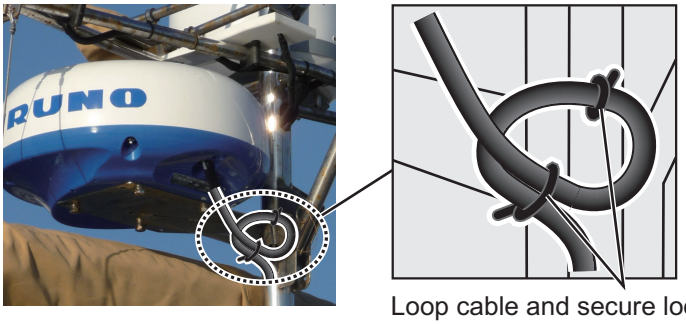

Loop cable and secure loop with cable ties.
The minimum bend radius is 242 mm.

- For waterproofing, wrap the junction of the connectors with self-bonding tape and vinyl tape.

1) Wind one layer of the self-bonding tape around the connector joint.

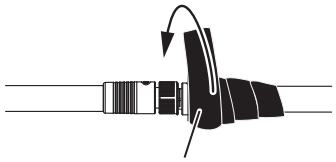

2) Change the winding direction and wind one layer of the self-bonding tape again.

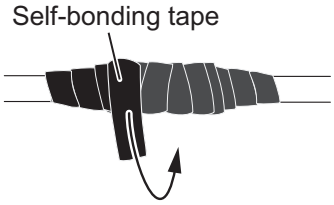

3) Wind one layer of the vinyl tape over the self-bonding tape.

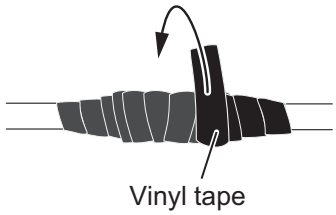

4) Change the winding direction and wind one layer of vinyl tape again.

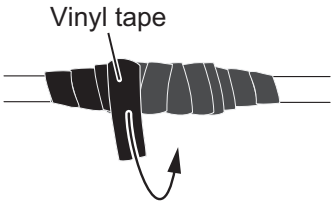

2. INITIAL SETUP

2.1 Connections

2.1.1 Power requirements

The antenna unit requires either 12 VDC or 24 VDC power. Connect the red cable of the cable assembly to the positive terminal of the distribution switchboard and the blue wire to the negative terminal of the distribution switchboard. The black wire is a shielded wire; connect it to the hull ground.

2.1.2 LAN cable connection

Connect the LAN cable to the display unit or the Ethernet Hub HUB-101.

2.2 Checks After Installation

Do the following before using the equipment.

- Perform a mechanical inspection.
- Power the unit and make the initial settings.

Mechanical inspection

Check the following before powering the equipment.

- All flat washers are in the correct position and tightly fastened.
- All connection points are correctly connected.
- All cables are connected.
- The LAN cable is connected to the display unit.

Initial setup

Refer to the information described in this manual and the manual of the display unit to do the initial setup.

1. Power the radar sensor and the display unit. Warm up of the magnetron begins.
2. When communication between the display unit and this unit is established, a countdown or "preparation" appears on the display. If not displayed, check that the radar sensor is connected to the display unit and that the settings on the display unit are correct (see the operator's manual for the display unit).
3. Transmit and confirm that radar echoes appear on the display.
   - If the FR-8 is connected as a display unit, set the following items. For other display units, confirm and set the antenna rotation speed, align the heading, suppress the main bang, set sector blanking area(s), set the tuning mode, and tune the radar manually. See the display unit's installation manual for the procedure.

([Installation] menu)

Menu item	Description
[Heading Alignment]	See "How to align the antenna heading". • Make sure the heading line is displayed in the correct direction. Check that targets are displayed in the correct direction with respect to the bow.
[Sweep Timing]	Adjust the sweep timing (Setting range: -10 to 10).
[MBS Adjustment]	If main bang appears at the screen center, slide the circle icon, while watching the radar echo on the left-side of the display, until the main bang disappears.

Note: The items on the [Installation] menu come into effect after completing the following settings.

1) Press the **MENU** key to open the menu.
2) While pressing and holding down the **CANCEL/HF OFF** key, press the **MENU** key five times.

([Sector Blanks] menu)

Menu item	Description
[Sect-Blank1], [Sect-Blank2]	Up to two sectors may be set for blanking (no transmission). Select [ON] to enable this feature. Set the start and end angles (0° to 359°).

([Tuning/Channel] menu)

Menu item	Description
[Tuning Mode]	Set the tuning mode, automatic or manual, for the connected radar.
[Manual Tuning]	Manually tune the radar. Not available when [Tuning Mode] is [Auto].
[Tune Initialize]	If the radar cannot be turned, initialize tuning.

How to align the antenna heading

You have mounted the antenna unit facing straight ahead in the direction of the bow. Therefore, a small but conspicuous target dead ahead visually should appear on the heading line (zero degrees).

You may observe a minor bearing error on the display. This is due to the difficulty in orienting the antenna unit accurately. The following adjustment will compensate for the error.

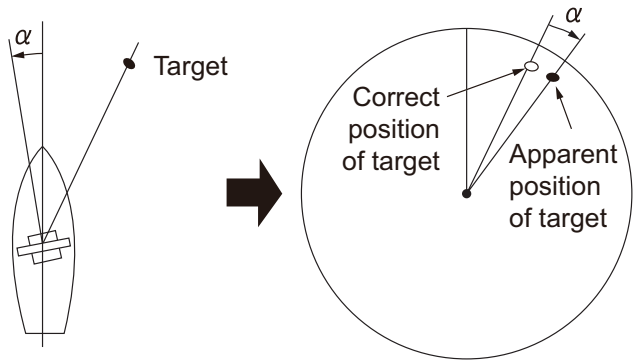

Antenna installation error (deviated to port)

Picture appears deviated clockwise (enter plus offset value)

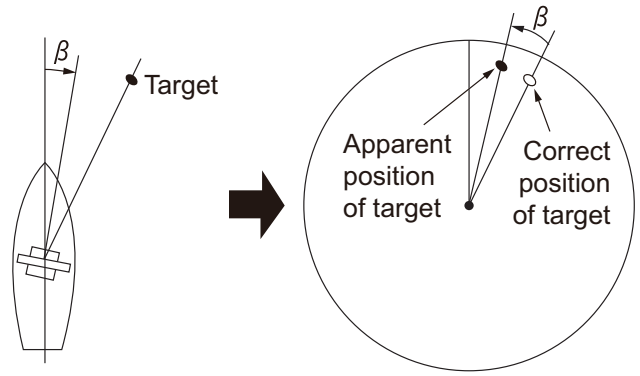

Antenna installation error (deviated to starboard)

Picture appears deviated counterclockwise (enter minus offset value)

1. Select a range between 0.125 and 0.25 NM and set the mode to "head up".
2. Turn the vessel’s bow toward a target.
3. Press the MENU key to open the menu.
4. While pressing and holding down the CANCEL/HF OFF key, press the MENU key five times.
5. Open the [Installation] menu.
6. Select [Heading Alignment].
7. Key in an offset value so that the target is at the very top of the screen (setting range: 0.0° to 359°) then press the ENTER key. Enter a plus value if the deviation is clockwise; minus value if the deviation is counterclockwise.
8. Confirm that the target echo is displayed at correct bearing on the screen.

3. MAINTENANCE, TROUBLESHOOTING

This chapter describes the maintenance and troubleshooting procedures which the user can follow to maintain the performance of the equipment and restore normal operation. Before performing any maintenance or inspection, review the information below and the safety instructions at the beginning of this manual. If normal operation cannot be restored, do not attempt to check inside the equipment. Contact a FURUNO agent or dealer for service.

⚠ WARNING

DO NOT OPEN THE SENSOR.
Electrical shock hazard

There are no user-serviceable parts inside. Only qualified personnel are allowed to work inside the equipment.

Wear a safety belt and hard hat when working on the sensor.

Serious injury or death can result if someone falls from the radar mast.

NOTICE

Do not use paint, anti-corrosion products, contact spray or other items containing organic solvents on the equipment.

Organic solvents can harm paint and plastic, particularly the connectors.

3.1 Maintenance

Regular maintenance is important for good performance. Check the points mentioned below every 3 to 6 months to keep the sensor in good working order. Observe the safety instructions at the front of this manual when working on the mast.

Check	Checkpoint	Action
Cabling	Confirm that all cabling is tightly connected and is not damaged.	• Confirm that all cables are firmly connected. • If a cable is damaged, replace it.
Nuts and bolts of antenna unit	Nuts and bolts are exposed to sea breeze and wind and rain, and corrode over time. Check for corrosion and looseness.	• Replace corroded bolts. • Tighten loosened bolts. • Coat new bolts and nuts with marine sealant.
Ground terminal of antenna unit	Confirm that the ground terminal is not loose or rusted, and that the ground wire is securely fastened.	• Tighten loosened ground wire. • If rust is present, remove it.

3.2 Troubleshooting

The table below provides simple troubleshooting procedures which the user can follow to restore normal operation. If you cannot restore normal operation, contact your dealer for advice.

Trouble	Remedy
The display shows "No radar" and the radar does not go into stand-by.	• Check if power is being supplied to the antenna unit. • Check if the power supply is the rated voltage of the device (12/24 VDC). • Check if the fuse (in the cable assy.) has blown. • Check all cables for damage. • Check that the software version of the display unit is compatible with the antenna unit.
The equipment goes into stand-by after start up. However, no radar echoes appear after transmitting. Then, radar echoes disappear and the message "No radar" appears.	• Check the power supply voltage and capacity. • Check that all cables are securely connected. • Check all cables for damage.
In the TX state, no echoes appear or echoes are faint.	Check that tuning, gain, sea clutter, and rain clutter are properly adjusted.
Echoes are faint even if the tuning is adjusted or the sensitivity is increased.	The magnetron in the antenna unit may have deteriorated. Contact a FURUNO agent or dealer about replacement of the magnetron.
Echoes appear only in some areas and are faint.	• Check the sector blank settings. • Check for obstructions around the antenna.
Echoes are displayed where there is no targets.	False images can occur due to various factors. Adjust the sensitivity, sea clutter, etc. appropriately.

3.3 Replacement of Fuse

The fuse in the supplied cable assembly protects the equipment from overcurrent and equipment fault. If the fuse blows, find the cause before replacing the fuse. Use the correct fuse. A wrong fuse can cause fire, injury, or damage the equipment. If the fuse blows again, contact your dealer for advice.

Name	Type	Code No.
Fuse	FRU-60V-FU-5A	000-194-913

⚠ WARNING

Use the proper fuse.

Use of a wrong fuse can cause fire, injury, or damage the equipment.

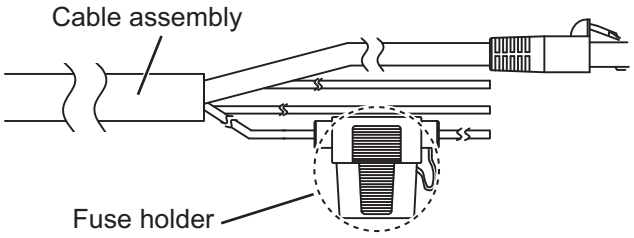

How to replace the fuse
Open the fuse holder cover and replace the fuse. Close the cover.

3.4 Replacement of Parts

Magnetron

When the life of the magnetron is reached, targets are faint and eventually no targets appear on the display. If this occurs, contact a FURUNO agent or dealer about replacement of the magnetron.

Name	Type	Code No.	Estimated life
Magnetron	M1653	000-199-065	Approx. 5,000 hours

Antenna motor

When the antenna motor reaches the end of its life, the antenna may stop rotating or emit abnormal noise. If you experience any of those symptoms, contact a FURUNO agent or dealer about replacement of the antenna motor.

Name	Type	Code No.	Estimated life
Stepping Motors	PM42L-048-JEG5	000-200-951-10	Approx. 3,000 hours

APPX. 1 RADIO REGULATORY INFORMATION

USA-Federal Communications Commission (FCC)

This device complies with part 15 of the FCC Rules. Operation is subject to the following two conditions:
(1) This device may not cause harmful interference, and
(2) This device must accept any interference received, including interference that may cause undesired operation. Any changes or modifications not expressly approved by the party responsible for compliance could void the user's authority to operate the equipment.

Caution: Exposure to Radio Frequency Radiation

- This equipment complies with FCC radiation exposure limits set forth for an uncontrolled environment and meets the FCC radio frequency (RF) Exposure Guidelines in Supplement C to OET65.
- This equipment should be installed and operated keeping the radiator at least 73 cm or more away from person's body.
- This device must not be co-located or operating in conjunction with any other antenna or transmitter.

SPECIFICATIONS OF RADAR SENSOR
DRS4DL X-Class

1 RADIATOR

1.1	Antenna type	Patch array antenna
1.2	Radome size	19-inch
1.3	Horizontal beam width	5.2° typical (3 dB)
1.4	Vertical beam width	25° (3 dB)
1.5	Sidelobe attenuation	-23 dB (within ±20°), -25 dB (±20° or more)
1.6	Rotation	24 rpm

2 RADAR FUNCTION

2.1	Tx frequency	9410±30 MHz, P0N
2.2	Output power	4 kW
2.3	Duplexer	Ferrite circulator
2.4	Intermediate frequency	60 MHz

2.5 Range, Pulse length and Pulse repetition rate

Range (NM)	Pulse length	PRR (Hz approx.)
0.0625 to 0.5	S	360
0.75 to 2	M	
3 to 36	L	

2.6	Minimum range	25 m
2.7	Range resolution	25 m
2.8	Range accuracy	1 % of range in use or 0.01 NM, which is the greater
2.9	Bearing resolution	5.2°
2.10	Bearing accuracy	±1°
2.11	Warming up time	90 s approx.

3 INTERFACE

LAN 1 port, Ethernet 100Base-TX, RJ45

4 POWER SUPPLY

12-24 VDC: 2.3-1.1 A (stand-by: 0.9-0.5 A)

5 ENVIRONMENTAL CONDITIONS

5.1	Ambient temperature	-25°C to +55°C (storage: -30°C to +70°C)
5.2	Relative humidity	93% or less at +40°C
5.3	Degree of protection	IP26
5.4	Vibration	IEC 60945 Ed.4

6 UNIT COLOR

N9.5 (cover), 2.5PB3.5/10 (bottom)

FURUNO

表1 TABLE 1

寸法区分（mm） DIMENSION	公差（mm） TOLERANCE
L≦50	±1.5
50<L≦100	±2.5
100<L≦500	±3

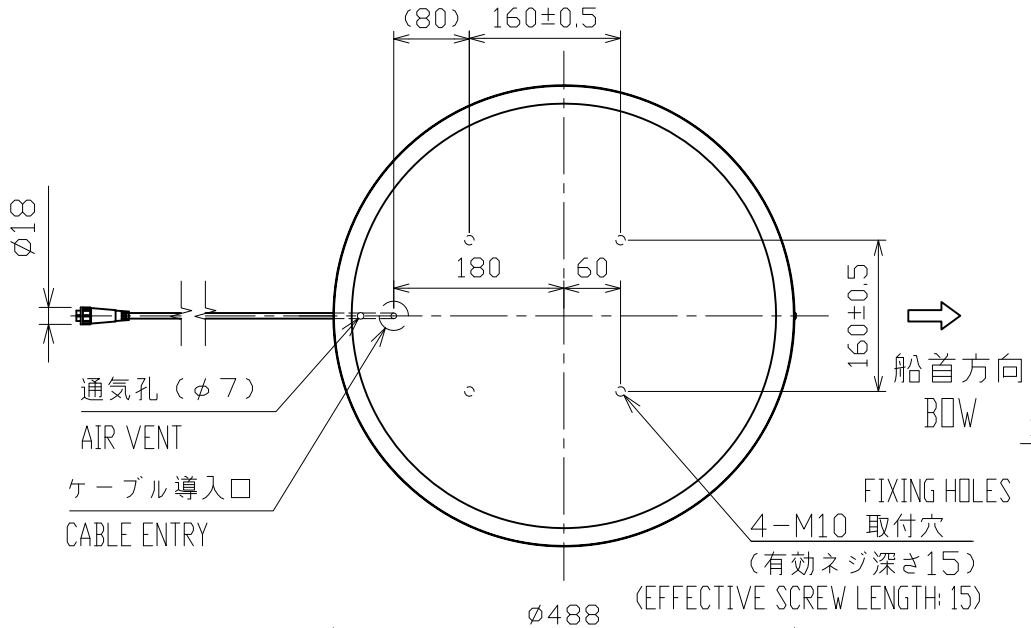

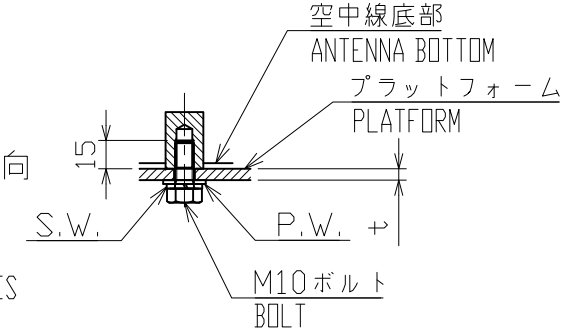

A部 詳細 （尺度：1／4）

DETAIL OF A (SCALE: 1/4)

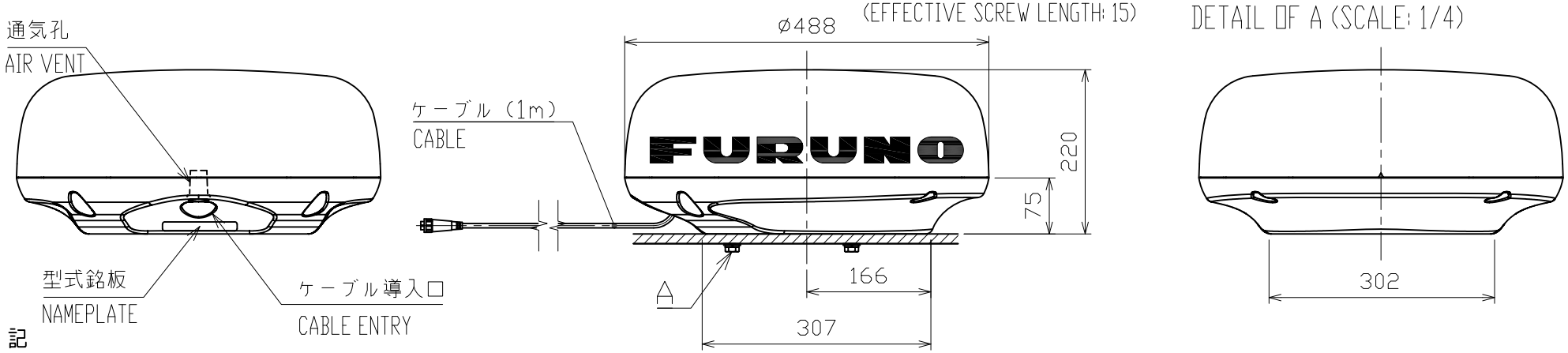

注 記

1） 指定外の寸法公差は表1による。

2） 取付用ネジはM10ボルトを使用のこと。ネジ長さは板厚（t）に応じ 20（t≦5）または25（5<t≦10）とする。

NOTE

1. TABLE 1 INDICATES TOLERANCE OF DIMENSIONS WHICH IS NOT SPECIFIED.
2. USE M10 BOLTS FOR FIXING THE UNIT. SCREW LENGTH SHOULD BE 20 (t≦5) OR 25 (5<t≦10). t: THICKNESS OF PLATFORM.

DRAWN 17/Jan/2024 T.YAMASAKI			TITLE RSB-150-136
CHECKED 17/Jan/2024 H.MAKI			名称 空中線部
APPROVED 29/Feb/2024 H.MAKI		DRS4DL X-Class	外寸図
SCALE 1/8	MASS 5.3 ±10% kg	質量はケーブル（1m）を含む。 MASS INCLUDES 1m CABLE.	NAME ANTENNA UNIT
DWG.No. C3700-G01- A		REF.No. 03-210-300G-1	OUTLINE DRAWING

FURUNO ELECTRIC CO., LTD.

D-1

1. レドームアンテナ基部の取付
INSTALLATION FOR BOTTOM UNIT OF RADOME ANTENNA

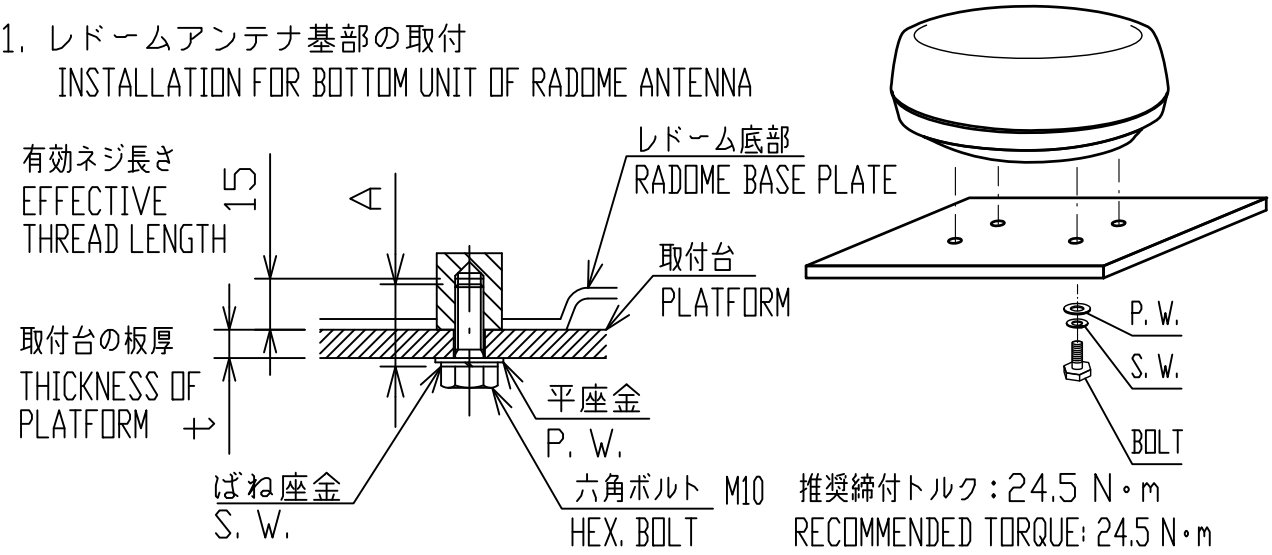

工材のボルト（M10×25）で取付可能な板厚は5~10です。それ以外の板厚には必要なネジ長さ（A=t+15）のボルトを現地手配願います。

THE THICKNESS OF PLATFORM IS FROM 5 TO 10 WITH PROVIDED BOLTS (M10x25).
PREPARE THE BOLTS AT LOCALLY, FOR OTHER THICKNESS(t) OF PLATFORM. (A=t+15)

2. ボルト締付部の防水
WATERPROOFING FOR BOLT HEAD

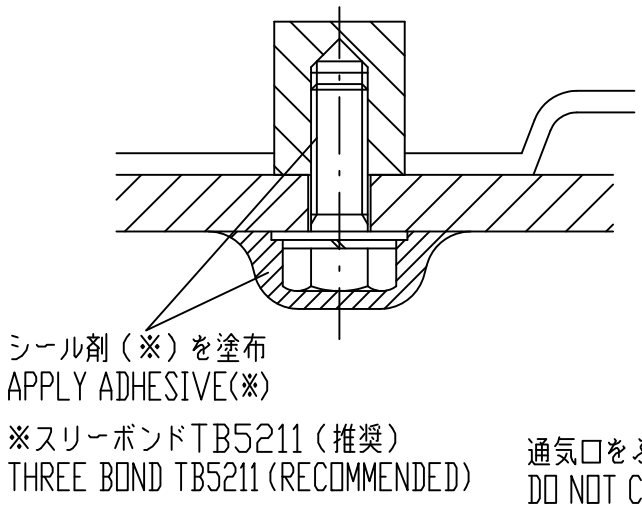

3. 通気口の確保
KEEPING VENTIRATION

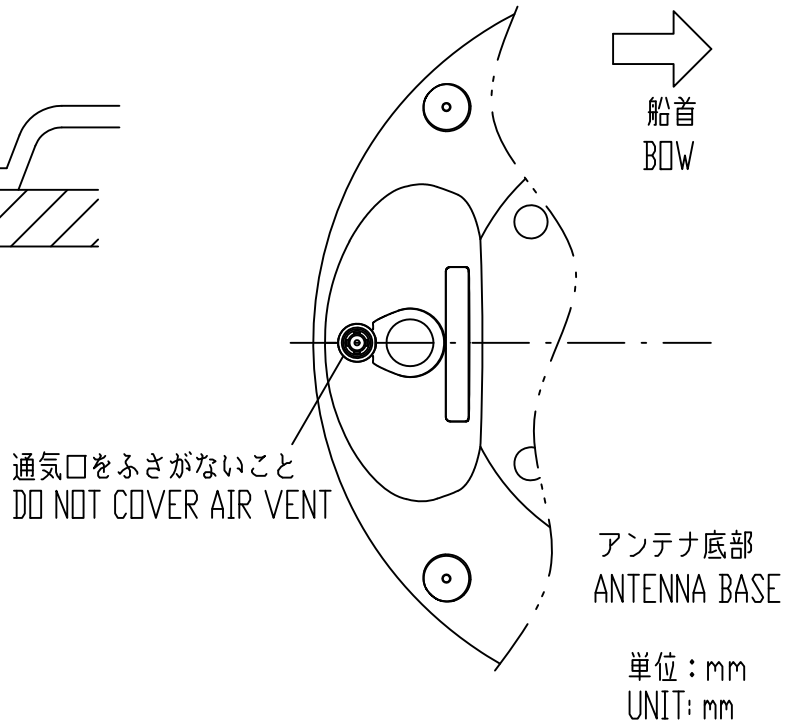

DRAWN 19/Oct/2021 T.YAMASAKI			TITLE RADAR RADOME ANTENNA
CHECKED 19/Oct/2021 H.MAKI			名称 レーダーレドームアンテナ（締付トルク）
APPROVED 13/Dec/2021 H.MAKI			装備要領図
SCALE –	MASS – ±10% kg		NAME TORQUE FOR FASTENING (RADOME ANTENNA)
DWG. No. C3900-Y02- A		REF. No.	INSTALLATION PROCEDURE

FURUNO

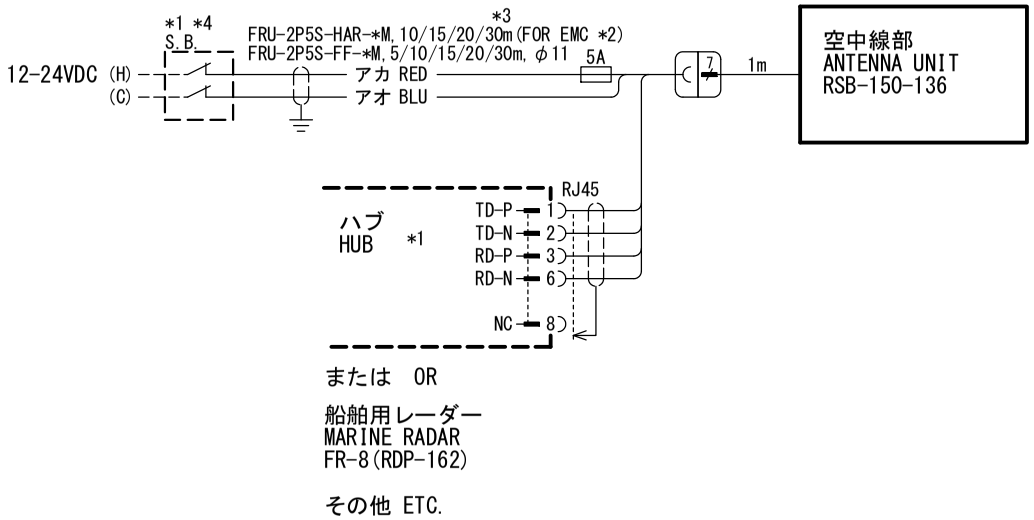

注記
＊１）現地手配。
＊２）オプション。
＊３）30mケーブルは24V電源のみ使用可。
＊４）スイッチボックスを用意してください。

NOTE
*1: LOCAL SUPPLY.
*2: OPTION.
*3: 30m CABLE AVAILABLE FOR 24V SOURCE ONLY.
*4: A SWITCH BOX REQUIRED FOR INSTALLATION THIS UNIT.

DRAWN 14/Feb/2024 T. YAMASAKI			TITLE DRS4DL X-Class
CHECKED 14/Feb/2024 H. MAKI			名 称 レーダーセンサー
APPROVED 29/Feb/2024 H. MAKI			相互結線図
SCALE	MASS kg		NAME RADAR SENSOR
DWG. No. C3700-C01- A	REF. No. 03-210-6021-0		INTERCONNECTION DIAGRAM

FURUNO ELECTRIC CO., LTD.

FURUNO ELECTRIC CO., LTD.

9-52 Ashihara-cho,
Nishinomiya, 662-8580, JAPAN

・FURUNO Authorized Distributor/Dealer

All rights reserved.

Printed in Japan

Z : MAR. 2024

Pub. No. IME-37000-Z

(MOHA) DRS4DL_X-CLASS

0 0 0 2 0 0 9 8 4 1 0