TAIYO R/C

OCTO SPINNER 360°

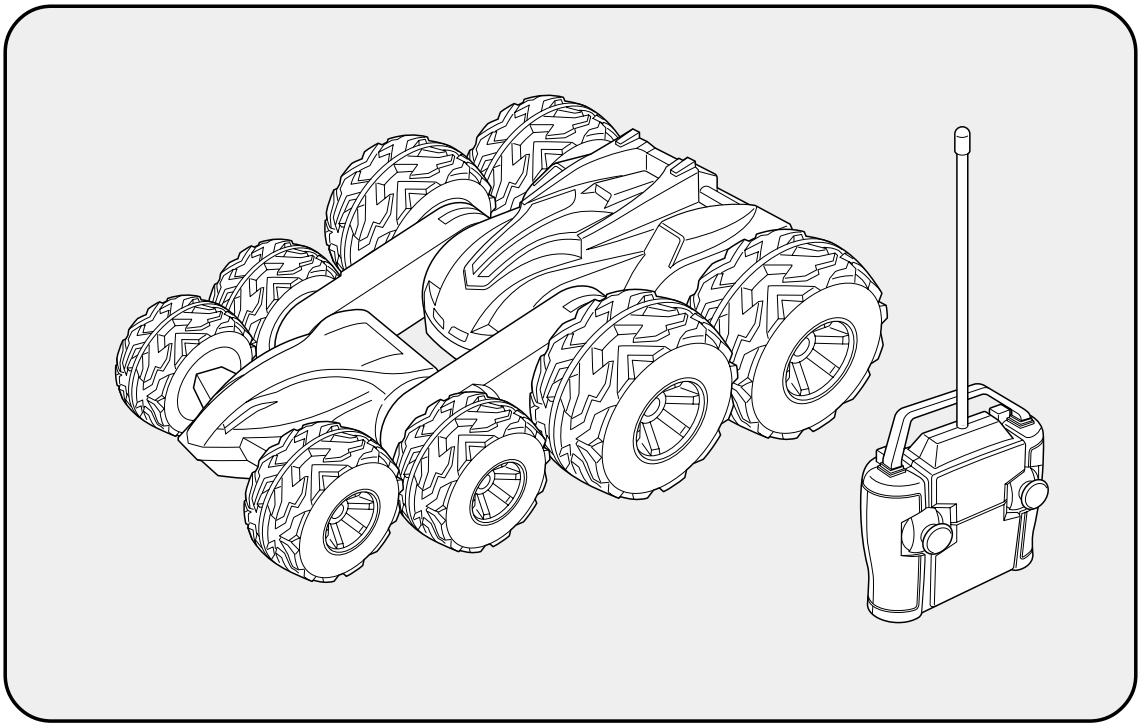

ENG

OWNER'S MANUAL

Keep these instructions for future reference
as they contain important information.

2-3-4-5,6-7

638A507-01

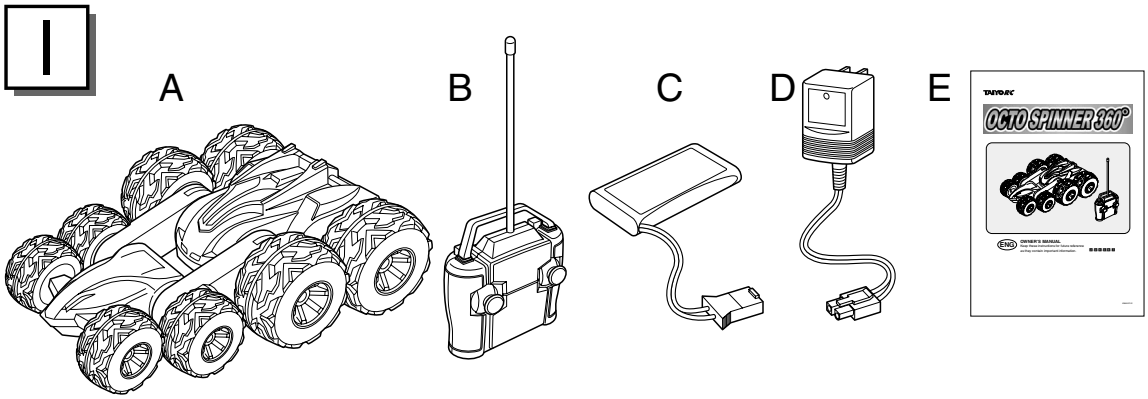

❶

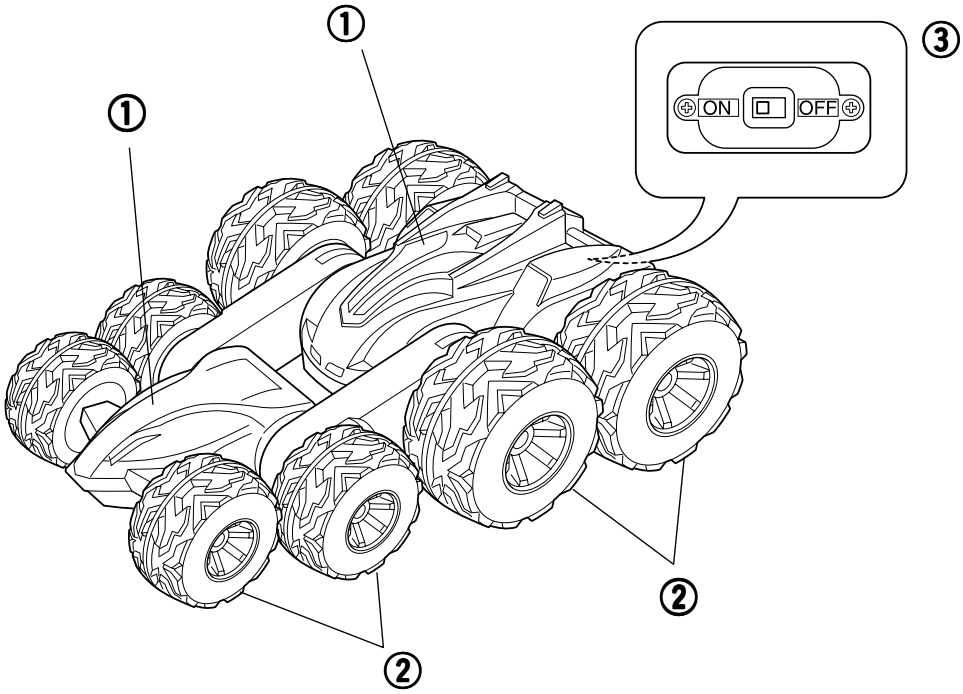

❷

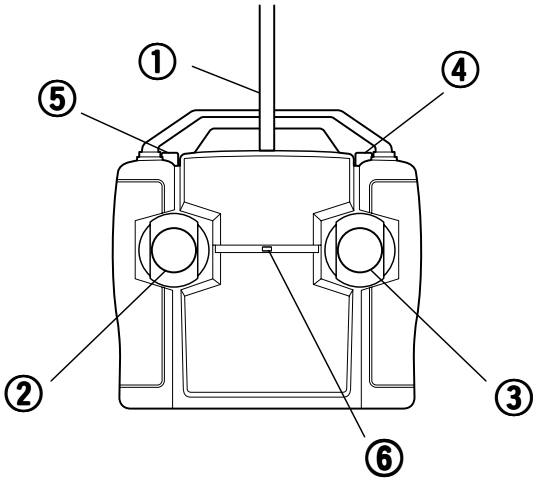

A507OCTSPINNR638A507-01 Page 2 2005.06.15, 16:07 Adobe PageMaker 6.5/PPC

II ❶

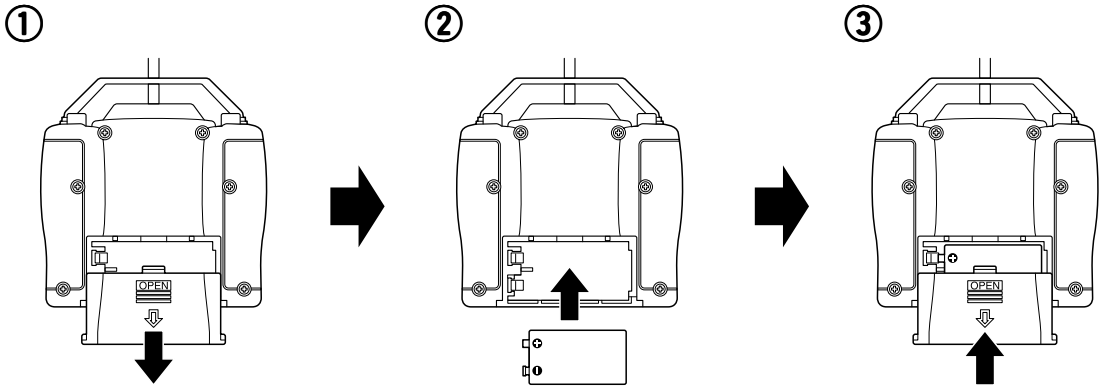

❷

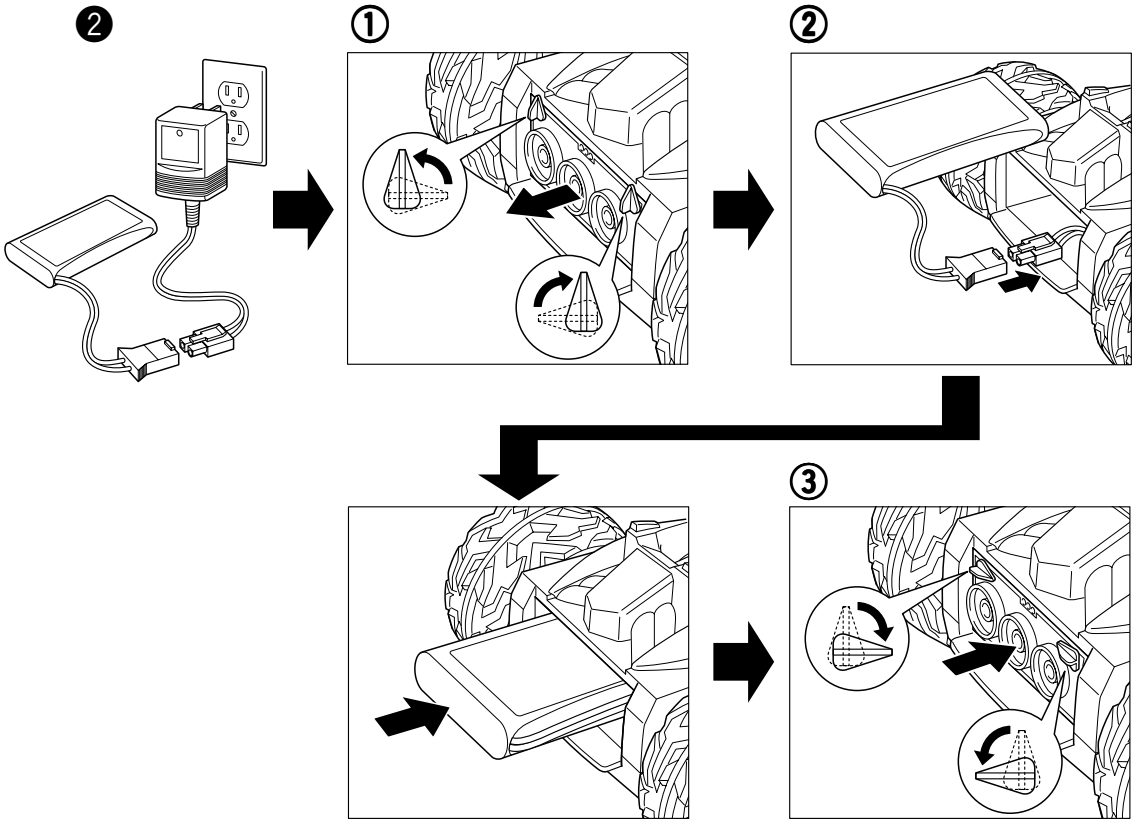

A507OCTSPINNR638A507-01 Page 3 2005.06.15, 16:07 Adobe PageMaker 6.5/PPC

III

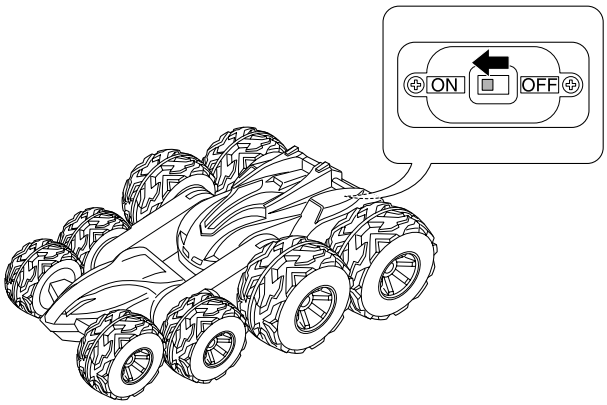

IV

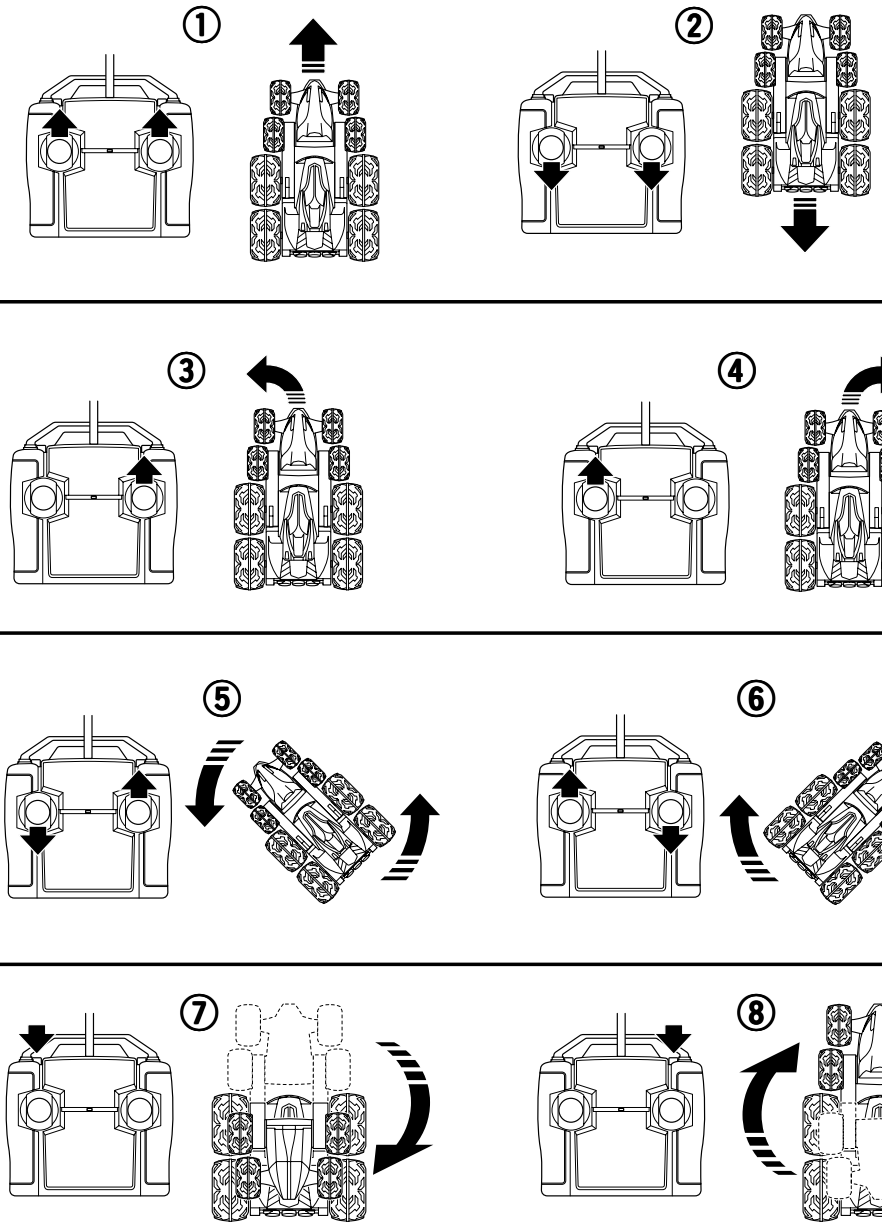

A507OCTSPINNR638A507-01 Page 4 2005.06.15, 16:08 Adobe PageMaker 6.5/PPC

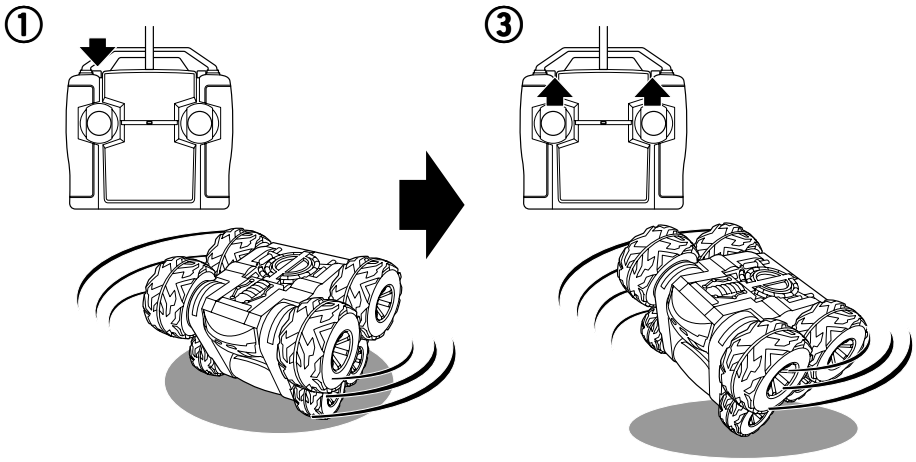

V

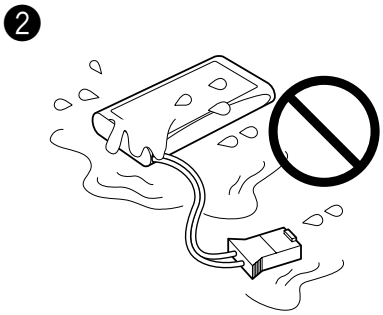

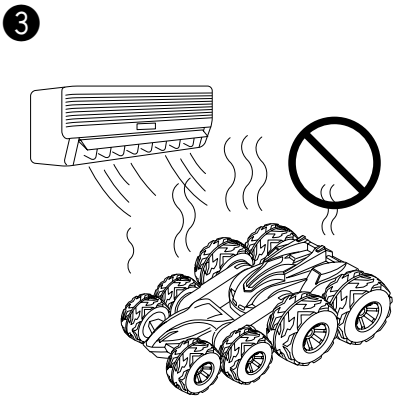

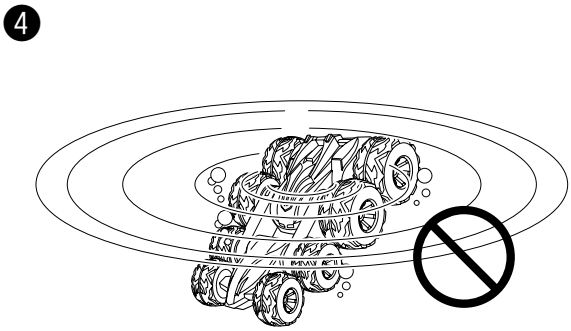

A507OCTSPINNR638A507-01 Page 5 2005.06.15, 16:08 Adobe PageMaker 6.5/PPC

Please check the headings I - V with the diagrams in pages 2, 3, 4, 5.

I. CONTENTS & FEATURES

This kit includes:

A. Octo Spinner 360°
B. Transmitter
C. 9.6V battery pack
D. Battery charger
E. Manual

❶ Octo Spinner 360°
(Side View)
① Body
② Wheel
③ On/Off Switch

❷ Transmitter
① Transmitter Antenna
② Control Stick for Left Side Wheel
③ Control Stick for Right Side Wheel
④ Up Button
⑤ Down Button
⑥ Power Indicator

There is no on/off switch on Transmitter. Moving the sticks turns it on automatically.

II. BATTERY INSTALLATION

❶ Transmitter

To remove, reverse the installation procedure

① Slide open the battery door in the direction as shown in the figure, while lightly pressing its center.
② Insert a 9V (006P) battery with the polarity (+/-) as shown on the bottom of battery compartment.
③ Replace battery door, following the removal procedure in reverse.

❷ Octo Spinner 360°
This product should be used with adult supervision.
Fully charge 9.6V battery pack in advance of your use
①Turn the latches on vehicle battery door to unlock and open.
② Insert 9.6V battery pack into battery compartment with correct polarity (+/-).
③ Close battery door, turn the latches to lock.

III. BEFORE OPERATION

Turn vehicle power on.

On/Off Switch is on the rear of the vehicle.

IV. THROTTLE CONTROLS

① **FORWARD** (Push both sticks forward.)
② **REVERSE THRUST** (Pull both sticks back.)
③ **LEFT TURN (FORWARD)** (Push right stick forward.)
④ **RIGHT TURN (FORWARD)** (Push left stick forward.)
⑤ **LEFT SPIN** (At the same time, pull left stick back and push right stick forward.)
⑥ **RIGHT SPIN** (At the same time, pull right stick back and push left stick forward.)
⑦ **Folding** (Press the Up button.)
⑧ **Unfolding** (Press the Down button.)

ONE-WHEEL SPINNING

The vehicle spins on either of its front wheels like a top.
① Push the Up button to fold the vehicle's body.
② The vehicle starts spinning (i.e., spin turning) with the small-wheel side down.
③ When the vehicle is spinning, push both sticks of the transmitter forward (both sides forward) at the same time.
④ The vehicle starts one-wheel spinning.

V. CAUTIONS DURING PLAYING WITH VEHICLE

❶ Do not drive your vehicle on streets or in a crowded place.
❷ When 9.6V battery pack gets wet, dry completely to store.
❸ Do not store the vehicle in a place near a heater or like where temperature rises. After use, remove the batteries from transmitter and vehicle to store.
❹ This vehicle is not water-proofed. Immersing it into water may lead to a malfunction. Dry vehicle well after operating on water.

BATTERY SAFETY INFORMATION

Batteries may leak fluids that can cause a chemical burn injury or ruin your toy (product). To avoid battery leakage:
- Insert batteries as indicated inside the battery compartment.
- Remove batteries during long periods of non-use. Always remove exhausted batteries from the toy (product). Dispose batteries safely.
- Do not dispose the batteries in a fire. They may explode or leak.
- Never short-circuit the battery terminals.
- Use only batteries of the same or equivalent type, as recommended.
- Do not charge non-rechargeable batteries.
- If removable, rechargeable batteries are used in the Octo Spinner 360° and/or transmitter, they are only to be charged under adult supervision.

IMPORTANT INFORMATION

- DO NOT RECHARGE THE BATTERY IF IT FEELS HOT. ALLOW IT TO COOL BEFORE RECHARGING.
- NOT ATTEMPT TO USE OR CHARGE THE BATTERY IF IT SHOWS SIGNS OF LEAKAGE OR CORROSION.
- DO NOT DISASSEMBLE THE BATTERY.
- IF THE OCTO SPINNER 360° BATTERY AND TRANSMITTER ARE WET, THOROUGHLY DRY BEFORE USING OR CHARGING.
- REGULARLY EXAMINE ALL WIRES AND CONNECTORS. IN THE EVENT OF DAMAGE, DO NOT USE.

Important:
- If driving time becomes shorter or wheels do not turn with full power, the capacity of the 9.6V battery pack are insufficient. (Power LED light becomes dimmer as batteries wear.) It is the tell-tale sign you need to replace the 9.6V battery pack.
- Be sure to recharge the Octo Spinner 360° just before driving it. If you do not play with the Octo Spinner 360° immediately after recharging, the charge is drained and the Octo Spinner 360° cannot drive.
- When the battery temperature gets too high, the circuit shuts off automatically to protect the receiver circuit and the battery in the Octo Spinner 360°. In such a case, wait until

the battery cools down before recharging or playing with the Octo Spinner 360°.

- If the rechargeable battery is repeatedly charged without being sufficiently discharged first, the capacity will gradually decrease (memory effect of battery). This is a characteristic of rechargeable batteries. Be sure to start recharging after operating the vehicle until they nearly stop.

VI. SAFETY INFORMATION

Adults, this toy is recommended for children 8 years of age and older. To ensure that the child's play is both safe and fun, please review the operating instructions and these general safety rules with the child.

- Keep fingers, hair and loose clothing away from the wheels while the Octo Spinner 360° is switched ON.
- Adult supervision is recommended when the Octo Spinner 360° is being operated.
- To avoid accidental operation, remove the removable battery when not in use.
- If the Octo Spinner 360° and/or transmitter get wet, discontinue to use until they are completely dry.
  Thoroughly wipe off all moisture and allow them to air-dry completely before use.
- DO NOT drive in the street! Make sure you have plenty of open space in all directions (please see Section V).
- Regularly inspect the antenna for cracks or breaks. Do NOT bend the transmitter antenna. DO NOT use the transmitter if the antenna is broken.

TROUBLESHOOTING GUIDE

- Make sure the vehicle power is on.
- Make sure the batteries in transmitter and vehicle have sufficient charge.
- Check if the batteries in transmitter and vehicle are inserted with correct polarity.
- Check if the distance between transmitter and vehicle will not exceed more than 65'/20m.
- Two or more vehicles of the same frequency will interference with each other. In such a case, move to another place or try after a while.

NOTE:

The manufacturer is not responsible for any radio or TV interference caused by unauthorized modifications to this equipment. Such modifications could void the user's authority to operate the equipment.

TAIYO R/C Customer Service

Precision built by Taiyo Kogyo Co.,Ltd.
Taiyo Toys Inc.,
Please call us : 1 - 866 - *RC* - *TAIYO* or E-mail us : info@taiyotoys.com
(1-866-728-2496)
Mon - Fri / 8:00AM - 5:00PM PST

TAIYO R/C 90 DAYS LIMITED WARRANTY : This product is thoroughly tested and inspected before shipment and is guaranteed to be free from factory defects in material and workmanship for a period of 90 days from the date of purchase. Taiyo Toys Inc. will repair or replace any defective part or unit free of charge during this period. This warranty is valid provided the product has been operated in accordance with the instructions and proof of purchase is furnished. This warranty does not apply to worn or defective batteries, or to items which have been damaged or abused by the consumer. This warranty gives you specific legal rights and is in addition to and does not diminish your statutory or other legal rights. **IMPORTANT:** Please return your product in its original package and keep a record of what you return.

GARANTÍA LIMITADA DE 90 DÍAS DEL TAIYO R/C: Este producto ha sido probado e inspeccionado minuciosamente y se garantiza que está libre de defectos de fábrica en material y mano de obra por un período de 90 días desde la fecha de compra. TaiyoToys Inc. reparará o reemplazará cualquier pieza defectuosa o unidad sin costo alguno durante este período. Esta garantía es válida siempre y cuando el producto haya sido utilizando de acuerdo a las instrucciones y se suministre la prueba de compra. Esta garantía no se aplica a pilas usadas o defectuosas o a elementos que se hayan dañado o mal usados por parte del consumidor. Esta garantía le proporciona derechos legales específicos, además de sus derechos reglamentarios u otros derechos legales los cuales no disminuye.
IMPORTANTE: Devuelva por favor el producto en su empaque original y tome nota de su devolución.

GARANTIE LIMITEE 90 JOURS TAIYO R/C : Ce produit a été testé et inspecté minutieusement avant expédition et il est garanti vierge de tout défaut de matériau et fabrication pour une période de 90 jours à partir de la date d'achat. Taiyo Toys Inc. réparera ou remplacera toute pièce défectueuse ou l'appareil lui-même sans aucun frais pendant cette période. Cette garantie est valable à condition que le produit ait été utilisé conformément aux instructions et qu'une preuve d'achat soit fournie. Cette garantie ne s'applique pas aux batteries usées ou défectueuses, ou aux éléments ayant été endommagés ou utilisés incorrectement par le client. Cette garantie vous donne des droits légaux spécifiques et s'ajoute, sans les diminuer, à vos droits statutaires ou à vos autres droits légaux.
IMPORTANT : Veuillez nous retourner ce produit dans son emballage d'origine et garder une trace de ce que vous avez renvoyé.

638A507-01