SET MODE Section 12

■ Set mode description 12-2
◇ Set mode operation 12-2
◇ Screen arrangement 12-3
■ Level set mode 12-4
■ ACC set mode 12-6
■ Display set mode 12-11
■ Miscellaneous (Others) set mode 12-13
■ CF card set menu 12-21
◇ CF card set screen arrangement 12-21
◇ Save option set mode 12-21
◇ Load option set mode 12-22
■ File saving 12-23
■ File loading 12-24
■ Changing the file name 12-25
■ Deleting a file 12-26
■ Formatting the CF card 12-26

■ Set mode description

Set mode is used for programming infrequently changed values or conditions of functions. The IC-7800 has a level set mode, display set mode, timer set mode, accessory set mode and miscellaneous (others) set mode.

◇ Set mode operation

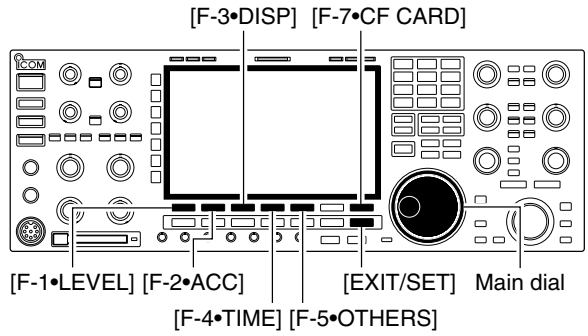

① Push [EXIT/SET] several times to close a multi-function screen, if necessary.
② Push [F-7•SET] to select set mode menu screen.
- Pushing and holding [EXIT/SET] for 1 sec. also selects set mode menu screen.

③ Push [F-1•LEVEL], [F-2•ACC], [F-3•DISP], [F-4•TIME], [F-5•OTHERS] or [F-7•CF CARD] to enter the desired set mode.
④ For level, accessory, display and miscellaneous (others) set mode, push [F-7•WIDE] to toggle wide and normal screen.
⑤ Push [F-1•▲] or [F-2•▼] to select the desired item, then rotate main dial to adjust/select the desired value or condition.
- Pushing [F-3•◀ ▶] operation may be necessary for some items.

⑥ Push [EXIT/SET] twice to exit set mode.

◇ Screen arrangement

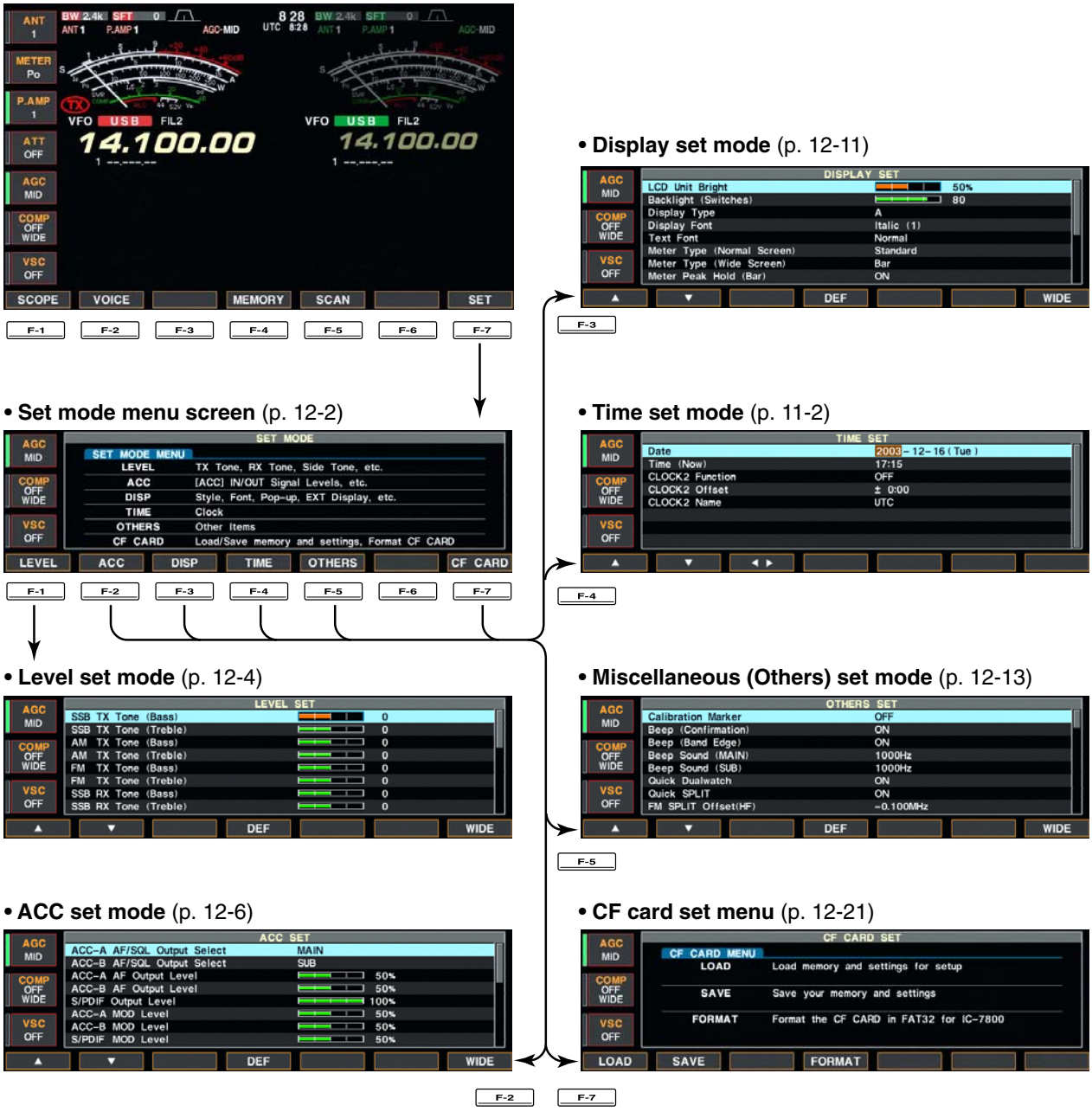

■ Level set mode

SSB TX Tone (Bass) 0

Sets the bass level of the transmit audio tone in SSB mode from –5 to +5. (default: 0)

SSB TX Tone (Treble) 0

Sets the treble level of the transmit audio tone in SSB mode from –5 to +5. (default: 0)

AM TX Tone (Bass) 0

Sets the bass level of the transmit audio tone in AM mode from –5 to +5. (default: 0)

AM TX Tone (Treble) 0

Sets the treble level of the transmit audio tone in AM mode from –5 to +5. (default: 0)

FM TX Tone (Bass) 0

Sets the bass level of the transmit audio tone in FM mode from –5 to +5. (default: 0)

FM TX Tone (Treble) 0

Sets the treble level of the transmit audio tone in FM mode from –5 to +5. (default: 0)

SSB RX Tone (Bass) 0

Sets the bass level of the receive audio tone in SSB mode from –5 to +5. (default: 0)

SSB RX Tone (Treble) 0

Sets the treble level of the receive audio tone in SSB mode from –5 to +5. (default: 0)

AM RX Tone (Bass) 0

Sets the bass level of the receive audio tone in AM mode from –5 to +5. (default: 0)

AM RX Tone (Treble) 0

Sets the treble level of the receive audio tone in AM mode from –5 to +5. (default: 0)

■ Level set mode (continued)

FM RX Tone (Bass) 0

Sets the bass level of the receive audio tone in FM mode from –5 to +5. (default: 0)

FM RX Tone (Treble) 0

Sets the treble level of the receive audio tone in FM mode from –5 to +5. (default: 0)

SSB TBW (WIDE) 100 – 2900

Sets the transmission passband width for wide setting by selecting the lower and higher frequencies.

Lower freq. : 100 (default), 300 and 500 Hz
Higher freq.: 2500, 2700 and 2900 Hz (default)

SSB TBW (MID) 300 – 2700

Sets the transmission passband width for middle setting by selecting the lower and higher frequencies.

Lower freq. : 100, 300 (default) and 500 Hz
Higher freq.: 2500, 2700 (default) and 2900 Hz

SSB TBW (NAR) 500 – 2500

Sets the transmission passband width for narrow setting by selecting the lower and higher frequencies.

Lower freq. : 100, 300 and 500 Hz (default)
Higher freq.: 2500 (default), 2700 and 2900 Hz

Speech Level 50%

Sets the voice synthesizer audio output level from 0 to 100% in 1% steps. (default: 50%)

Side Tone Level 50%

Sets the side tone output level from 0 to 100% in 1% steps. (default: 50%)

Side Tone Level Limit ON

Turns the side tone output level limiting capability from ON and OFF. (default: ON)

Beep Level 50%

Sets the key-touch beep output level from 0 to 100% in 1% steps. (default: 50%)

Beep Level Limit ON

Turns the key-touch beep output level limiting capability from ON and OFF. (default: ON)

■ Level set mode (continued)

Phones Level Ratio 1.00

Sets the ratio for audio output level from the headphone toward to the internal speaker within 0.60 to 1.40 range in 0.01 steps. (default: 1.00)

Phone L/R Mix OFF

Selects the headphone audio output.

- OFF : Outputs the main band's audio from the left, and sub band's audio from the right. (default)
- ON : Outputs the mixed audio.

■ ACC set mode

ACC–A AF/SQL Output Select MAIN

Selects the desired band for the audio and squelch signals output from [ACC1–A] (Audio: pin 5, Squelch: pin 6) from MAIN and SUB.

- MAIN : Main band's AF and squelch signals are output from [ACC1–A]. (default)
- SUB : Sub band's AF and squelch signals are output from [ACC1–A].

ACC–B AF/SQL Output Select SUB

Selects the desired band for the audio and squelch signals output from [ACC1–B] (Audio: pin 5, Squelch: pin 6) from MAIN and SUB.

- MAIN : Main band's AF and squelch signals are output from [ACC1–A].
- SUB : Sub band's AF and squelch signals are output from [ACC1–A]. (default)

ACC–A AF Output Level 50%

Sets the desired audio output level, output from [ACC1–A], within 0 to 100% in 1% steps.

- Outputs approx. 200 mV at 50% (default) setting.

ACC–B AF Output Level 50%

Sets the desired audio output level, output from [ACC1–B], within 0 to 100% in 1% steps.

- Outputs approx. 200 mV at 50% (default) setting.

S/PDIF Output Level 100%

Sets the desired output level of [S/P DIF], within 0 to 100% in 1% steps. (default: 100%)

ACC–A MOD Level 50%

Sets the desired audio input level for modulation from [ACC1–A].

- Approx. 100 mV at 50% (default) setting.

■ ACC set mode (continued)

ACC–B MOD Level 50%

Sets the desired audio input level for modulation from [ACC1–B].

- Approx. 100 mV at 50% (default) setting.

S/PDIF MOD Level 50%

Sets the desired input level for modulation from [S/P DIF], within 0 to 100% in 1% steps.
(default: 50%)

DATA OFF MOD MIC,ACC–A,ACC–B

Selects the desired connector(s) for modulation input when data mode is not in use.

- MIC : Use the signals from [MIC].
- ACC-A : Use the signals from [ACC1–A] (pin 4).
- ACC-B : Use the signals from [ACC1–B] (pin 4).
- MIC,ACC-A : Use the signals from [MIC] and [ACC1–A] (pin 4).
- MIC,ACC-B : Use the signals from [MIC] and [ACC1–B] (pin 4).
- ACC-A,ACC–B : Use the signals from [ACC1–A] and [ACC1–B] (pin 4).
- MIC,ACC-A,ACC–B : Use the signals from [MIC], [ACC1–A] and [ACC1–B] (pin 4). (default)
- S/P DIF : Use the signals from [S/P DIF].

DATA1 MOD ACC–A

Selects the desired connector(s) for modulation input when data 1 mode (D1) is in use.

- MIC : Use the signals from [MIC].
- ACC-A : Use the signals from [ACC1–A] (pin 4). (default)
- ACC-B : Use the signals from [ACC1–B] (pin 4).
- MIC,ACC-A : Use the signals from [MIC] and [ACC1–A] (pin 4).
- MIC,ACC-B : Use the signals from [MIC] and [ACC1–B] (pin 4).
- ACC-A,ACC–B : Use the signals from [ACC1–A] and [ACC1–B] (pin 4).
- MIC,ACC-A,ACC–B : Use the signals from [MIC], [ACC1–A] and [ACC1–B] (pin 4).
- S/P DIF : Use the signals from [S/P DIF].

■ ACC set mode (continued)

DATA2 MOD	ACC–B
Selects the desired connector(s) for modulation input when data 2 mode (D2) is in use.	• MIC : Use the signals from [MIC]. • ACC-A : Use the signals from [ACC1–A] (pin 4). • ACC-B : Use the signals from [ACC1–B] (pin 4). (default) • MIC,ACC-A : Use the signals from [MIC] and [ACC1–A] (pin 4). • MIC,ACC-B : Use the signals from [MIC] and [ACC1–B] (pin 4). • ACC-A,ACC–B : Use the signals from [ACC1–A] and [ACC1–B] (pin 4). • MIC,ACC-A,ACC–B : Use the signals from [MIC], [ACC1–A] and [ACC1–B] (pin 4). • S/P DIF : Use the signals from [S/P DIF].

DATA3 MOD	ACC–A,ACC–B
Selects the desired connector(s) for modulation input when data 3 mode (D3) is in use.	• MIC : Use the signals from [MIC]. • ACC-A : Use the signals from [ACC1–A] (pin 4). • ACC-B : Use the signals from [ACC1–B] (pin 4). • MIC,ACC-A : Use the signals from [MIC] and [ACC1–A] (pin 4). • MIC,ACC-B : Use the signals from [MIC] and [ACC1–B] (pin 4). • ACC-A,ACC–B : Use the signals from [ACC1–A] and [ACC1–B] (pin 4). (default) • MIC,ACC-A,ACC–B : Use the signals from [MIC], [ACC1–A] and [ACC1–B] (pin 4). • S/P DIF : Use the signals from [S/P DIF].

ACC–A BAND Voltage Output	TX
Selects the desired band for the operating frequency band control signal output from [ACC2–A] (pin 4).	• MAIN : Outputs the band signal displayed in main readout. • SUB : Outputs the band signal displayed in sub readout. • TX : Outputs the band signal, that can be transmitted. (default)

ACC–B BAND Voltage Output	TX
Selects the desired band for the operating frequency band control signal output from (pin 4).	• MAIN : Outputs the band signal displayed in main readout. • SUB : Outputs the band signal displayed in sub readout. • TX : Outputs the band signal, that can be transmitted. (default)

■ ACC set mode (continued)

SEND Relay Type — **Lead**

Selects the switching relay type for [RELAY] from Lead and MOS-FET.
Select the suitable relay type when connecting a non-Icom linear amplifier.

- Lead : Use mechanical relay. (16 V DC/0.5 A max.; default)
- MOS-FET : Use semiconductor type relay. (200 mA/250 V max.)

External Meter Output (M) — **Auto**

Selects the desired item for an external meter indication (main readout).

- Auto : Outputs the receiving signal strength level during receive, and outputs the selected content's level, selected with [METER], during transmit. (default)
- S(MAIN) : Outputs the receiving signal strength level during receive.
- Po : Outputs the transmitting power level during transmit.
- SWR : Outputs the VSWR level during transmit.
- ALC : Outputs the ALC level during transmit.
- COMP : Outputs the compression level during transmit.
- V_D : Outputs the drain's terminal voltage of the final FETs.
- I_D : Outputs the drain's current of the final FETs.

External Meter Output (S) — **Auto**

Selects the desired item for an external meter indication (sub readout).

- Auto : Outputs the receiving signal strength level during receive, and outputs the selected content's level, selected with [METER], during transmit. (default)
- S(MAIN) : Outputs the receiving signal strength level during receive.
- Po : Outputs the transmitting power level during transmit.
- SWR : Outputs the VSWR level during transmit.
- ALC : Outputs the ALC level during transmit.
- COMP : Outputs the compression level during transmit.
- V_D : Outputs the drain's terminal voltage of the final FETs.
- I_D : Outputs the drain's current of the final FETs.

External Meter Level (M) — **50%**

Sets the output level for an external meter indication (main readout) with in 0 to 100% range in 1% steps.

- Approx. 2.5 V at 50% (default) setting for full-scale indication. (4.7 kΩ impedance)

External Meter Level (S) — **50%**

Sets the output level for an external meter indication (sub readout) with in 0 to 100% range in 1% steps.

- Approx. 2.5 V at 50% (default) setting for full-scale indication. (4.7 kΩ impedance)

■ ACC set mode (continued)

REF IN/OUT — **OFF**

Selects the transceiver's reference signal condition from IN, OFF and OUT.

- IN : Use an external reference signal for the IC-7800.
- OFF : Not input/output the reference signal. (default)
- OUT : Outputs the IC-7800 reference signal to externally connected equipment(s) for their reference.

NOTE: When the applied reference signal has off-frequency, the IC-7800 may not work properly.

REF Adjust — **50%**

Adjusts the internal reference signal frequency within 0 to 100% range in 1% steps during frequency calibration. (default: 50%)

■ Display set mode

LCD Unit Bright	50%

Adjusts the LCD unit brightness within 0 (dark) to 100% (bright) range in 1% steps. (default: 50%)

Backlight (Switches)	80

Adjusts the switch indicators brightness within 1 (dark) to 100 (bright) range in 1 steps. (default: 80)

Display Type	A

Selects the desired display type from A, B and C. (default: A)

Display Font	Italic (1)

Selects the desired font for frequency readout from Italic (1), Italic (2), Italic (3), Italic (4), Round (1), Round (2), Round (3), Shadow (1), Shadow (2), Shadow (3), Qubic (1), Qubic (2), Qubic (3), Qubic (4), IC-780 (1), IC-780 (2), IC-780 (3) and IC-780 (4). (default: Italic (1))

Text Font	Normal

Selects the desired font for the indications other than frequency readout from Normal and Slim. (default: Normal)

Meter Type (Normal Screen)	Standard

Selects the desired S/RF meter type during normal screen indication from Standard, Edgewise and Bar. (default: Standard)

Meter Type (Wide Screen)	Edgewise

Selects the desired S/RF meter type during wide screen or mini scope indication from Edgewise and Bar. (default: Edgewise)

Meter Peak Hold (Bar)	ON

Turns the meter peak hold function ON and OFF. (default: ON)
This function is used for the bar meter only.

■ Display set mode (continued)

Memory Name — ON

Sets the memory name indication, during memory mode operation, ON and OFF. (default: ON)

- ON : The programmed memory name is displayed above the frequency indication.
- OFF : No memory name is displayed even a memory name is programmed.

APF-Width Popup (APF OFF➜ON) — ON

Turns the pop-up indication capability when the filter width for the APF is changed from ON and OFF. (default: ON)

MN-Q Popup (MN OFF➜ON) — ON

Turns the pop-up indication capability when the notch filter width is changed from ON and OFF. (default: ON)

External Display — OFF

Select “ON” when the external display is connected. (default: OFF)

- At least 800×600 pixel resolution is required for the display.

External Display Sync Pulse — H

Selects the suitable pulse level for the connected external display from H and L. (default: H)

Opening Message — ON

Turns the opening message screen indication capability ON and OFF. (default: ON)

My Call

Sets the desired 10-character text, such as your call sign, name, etc.
The set text is indicated in the opening screen.

Capital letters, small letters, numerals, some symbols (– / . @) and spaces can be used.

1. Push [F-5•EDIT] to select the name edit condition.
   - The 1st character and cursor blink.
2. Push [ABC], [abc], [123] or [Symbol] to select the character group, then rotate the main dial to select the character.
   - Push [ABC] or [abc] to toggle capital and small letters.
   - Push [123] or [Symbol] to toggle numerals and symbols.
   - Push [F-1•◀] or [F-2•▶] for cursor movement.
   - Push [F-3•DEL] to delete the selected character.
   - Push [F-4•SPACE] to input a space.
   - Pushing the transceiver’s keypad, [0]–[9], can also enter numerals.
3. Push [EXIT/SET] to set the name.

■ Miscellaneous (Others) set mode

Calibration Marker	OFF

This item is used for a simple frequency check of the transceiver. (default: OFF)
See p. 13-5 for calibration procedure.

NOTE: Turn the calibration marker OFF after checking the frequency of the transceiver.

Beep (Confirmation)	ON

A beep sounds each time a switch is pushed to confirm it. This function can be turned OFF for silent operation. (default: ON)

The beep output level can be set in level set mode. (p. 12-5)

Beep (Band Edge)	ON

A beep sounds when an operating frequency enters or exits an amateur band. This functions independent of the confirmation beep setting (above). (default: ON)

The beep output level can be set in level set mode. (p. 12-5)

Beep Sound (MAIN)	1000Hz

Sets the desired key-touch beep sound frequency during main readout operation within 500 to 2000 Hz in 10 Hz steps. (default: 1000 Hz)

Set the different frequency from “Beep Sound (SUB)” as below to distinguish between main and sub.

Beep Sound (SUB)	1000Hz

Sets the desired key-touch beep sound frequency during sub readout operation within 500 to 2000 Hz in 10 Hz steps. (default: 1000 Hz)

Set the different frequency from “Beep Sound (MAIN)” as above to distinguish between main and sub.

Quick Dualwatch	ON

When this item is set to ON, pushing [DUALWATCH] for 1 sec. sets the sub readout frequency to the main readout frequency and activates dualwatch operation. (default: ON)

See p. 5-16 for details.

■ Miscellaneous (Others) set mode (continued)

Quick SPLIT	ON
When this item is set to ON, pushing [SPLIT] for 1 sec. sets the sub readout frequency to the main readout frequency and activates split operation. (default: ON)	See p. 6-7 for details.

FM SPLIT Offset(HF)	–0.100MHz
Sets the offset (difference between transmit and receive frequencies) for the quick split function. However, this setting is used for HF bands in FM mode only and is used to input the repeater offset for an HF band. The offset frequency can be set from –9.999 MHz to +9.999 MHz in 1 kHz steps. (default: –0.100 MHz)	

FM SPLIT Offset(50M)	–0.500MHz
Sets the offset (difference between transmit and receive frequencies) for the quick split function. However, this setting is used for 50 MHz band FM mode only, and is used to input the repeater offset for the 50 MHz band. The offset frequency can be set from –9.999 MHz to +9.999 MHz in 1 kHz steps. (default: –0.500 MHz)	

SPLIT LOCK	OFF
When this item is ON, the main dial can be used to adjust the transmit frequency while pushing [XFC] even while the lock function is activated. (default: OFF) See pgs. 6-6, 6-7 for split frequency operation details.	

Tuner (Auto Start)	OFF
The internal antenna tuner has an automatic start capability which starts tuning if the SWR is higher than 1.5–3:1.	• OFF : The tuner remains OFF even when the SWR is poor (1.5–3:1). (default) • ON : Automatic tune starts even when the tuner is turned OFF during HF bands operation.

Tuner (PTT Start)	OFF
Tuning of the internal antenna tuner can be started automatically at the moment the PTT is pushed after the operating frequency is changed (more than 1% from last-tuned frequency). (default: OFF)	

■ Miscellaneous (Others) set mode (continued)

Transverter Function — **Auto**

Selects the transverter operation condition from Auto and ON. (default: Auto)

- ON : Turn the transverter operation ON.
- Auto : The transceiver turns into transverter operation condition when 2 to 13.8 V DC is applied to [ACC2–A/B] pin 6.

Transverter Offset — **16.000MHz (14.016.72 ➜ 30.016.72)**

Sets the desired offset frequency for the transverter operation within 0.000 to 99.999 MHz in 1 kHz steps. (default: 16.000 MHz)

RTTY Mark Frequency — **2125**

Selects the RTTY mark frequency. RTTY mark frequency is switched between 1275, 1615 and 2125 Hz. (default: 2125 Hz)

2125 Hz is automatically selected when the internal RTTY decoder is used.

RTTY Shift Width — **170**

Selects the RTTY shift width. There are 3 selectable values: 170, 200 and 425 Hz. (default: 170 Hz)

170 Hz is automatically selected when the internal RTTY decoder is used.

RTTY Keying Polarity — **Normal**

Selects the RTTY keying polarity. Normal or reverse keying polarity can be selected.
(default: Normal)

When reverse polarity is selected, Mark and Space are reversed.

- Normal : Key open/close = Mark/Space
- Reverse : Key open/close = Space/Mark

PSK Tone Frequency — **1500**

Selects the desired PSK tone frequency for the PSK reception from 1000, 1500 and 2000 Hz.
(default: 1500 Hz)

SPEECH Language — **English**

Selects the speech language from English and Japanese. (default: English)

SPEECH Speed — **HIGH**

Selects the speech speed from HIGH (faster) and LOW (slower). (default: HIGH)

■ Miscellaneous (Others) set mode (continued)

SPEECH S-Level	ON
The IC-7800 speech processor has frequency, mode and signal level announcement. Signal level announcement can be deactivated if desired. (default: ON) When “OFF” is selected, the signal level is not announced.	

SPEECH [MODE] Switch	OFF
Turns the operating mode speech capability when a mode switch is pushed from ON and OFF. (default: OFF) When “ON” is selected, the selected operating mode is announced when a mode switch is pushed.	

Memopad Numbers	5
Sets the number of memo pad channels available. 5 or 10 memo pads can be set. (default: 5)	

MAIN DIAL Operation	MAIN/SUB
Selects the main dial function from MAIN and MAIN/SUB. (default: MAIN/SUB)	• MAIN : The main dial functions only when accessing to main readout. • MAIN/SUB : The main dial functions when accessing to main readout, as well as when accessing to sub readout with [SUB] switch operation.

MAIN DIAL Auto TS	HIGH
Sets the auto tuning step function for the main dial. When rotating the main dial rapidly, the tuning step automatically changes several times as selected. There are 2 type of auto tuning steps: HIGH (Fastest) and LOW (Faster). (default: HIGH)	• HIGH : Auto tuning step is turned ON. Fastest tuning step during rapid rotation. (default) • LOW : Auto tuning step is turned ON. Faster tuning step during rapid rotation. • OFF : Auto tuning step is turned OFF.

SUB DIAL Auto TS	HIGH
Sets the auto tuning step function for the sub dial. When rotating the sub dial rapidly, the tuning step automatically changes several times as selected. There are 2 type of auto tuning steps: HIGH (Fastest) and LOW (Faster). (default: HIGH)	• HIGH : Auto tuning step is turned ON. Fastest tuning step during rapid rotation. (default) • LOW : Auto tuning step is turned ON. Faster tuning step during rapid rotation. • OFF : Auto tuning step is turned OFF.

■ Miscellaneous (Others) set mode (continued)

MIC Up/Down Speed	HIGH
Sets the rate at which frequencies are scanned when the microphone [UP]/[DN] switches are pushed and held. High or low can be selected.	• HIGH : High speed (default; 50 tuning steps/sec.) • LOW : Low speed (25 tuning steps/sec.)

Quick RIT/⊿TX Clear	OFF
Selects the RIT/⊿TX frequency clearing instruction with the [CLEAR] switch.	• ON : Clears the RIT/⊿TX frequency when [CLEAR] is pushed momentarily. • OFF : Clears the RIT/⊿TX frequency when [CLEAR] is pushed for 1 sec. (default)

[NOTCH] Switch (SSB)	Auto/Manual
Selects usable notch function for SSB mode operation from Auto, Manual and Auto/Manual.	• Auto : The auto notch can only be used. • Manual : The manual notch can only be used. • Auto/Manual : Both the auto and manual notch can be used. (default)

[NOTCH] Switch (AM)	Auto/Manual
Selects usable notch function for AM mode operation from Auto, Manual and Auto/Manual.	• Auto : The auto notch can only be used. • Manual : The manual notch can only be used. • Auto/Manual : Both the auto and manual notch can be used. (default)

DIGI-SEL VR Operation	DIGI-SEL
Selects [DIGI-SEL] control function from DIGI-SEL and APF.	• DIGI-SEL : [DIGI-SEL] control functions as the digital selector operation. (default) • APF : [DIGI-SEL] control functions as the audio peak filter adjustment.

FILTER Screen MAIN/SUB Select	Auto (by FILTER,PBT Operation)
Selects filter set screen indication condition from Fix and Auto (by FILTER,PBT Operation).	• Fix : When filter screen accessed with the main band's [FILTER] switch, the screen shows main band's filter width and PBT conditions only; when filter set screen accessed with the sub band's [FILTER] switch, the screen shows sub band's filter width and PBT conditions only. • Auto (by FILTER,PBT Operation) : Filter set screen indication can be switched between main and sub bands filter width and PBT conditions when either band's [FILTER] switch or [TWIN PBT] control is operated. (default)

■ Miscellaneous (Others) set mode (continued)

SSB/CW Synchronous Tuning	OFF
Selects the displayed frequency shift function from ON and OFF. (default: OFF) When this function is activated, the receiving signal can be kept to receive even when the operating mode is changed between SSB and CW. The frequency shifting value may differ according to the CW pitch setting.	• ON : The displayed frequency shifts when the operating mode is changed between SSB and CW. • OFF : The displayed frequency does not shift.

CW Normal Side	LSB
Selects the carrier point of CW mode from LSB and USB. (default: LSB)	

MIC AF Out	MAIN+SUB
Selects the desired band(s) for audio output from [MIC] connector (pin 8) from MAIN+SUB and SUB. (default: MAIN+SUB)	• MAIN+SUB : Outputs both main and sub bands audio. • SUB : Outputs sub band audio only.

External Keypad (VOICE)	OFF
Sets the external keypad for voice memory transmission capability ON and OFF. See page 2-6 for the equivalent circuit of an external keypad and connection.	• ON : Pushing one of external keypad switches, transmits the desired voice memory contents during a phone mode operation. • OFF : External keypad does not function. (default)

External Keypad (KEYER)	OFF
Sets the external keypad for keyer memory transmission capability ON and OFF. See page 2-6 for the equivalent circuit of an external keypad and connection.	• ON : Pushing one of external keypad switches, transmits the desired keyer memory contents during CW mode operation. • OFF : External keypad does not function. (default)

CI-V Baud Rate	Auto
sets the data transfer rate. 300, 1200, 4800, 9600, 19200 bps and “Auto” are available. (default: Auto) When “Auto” is selected, the baud rate is automatically set according to the connected controller or remote controller.	

■ Miscellaneous (Others) set mode (continued)

CI-V Address	6Ah

To distinguish equipment, each CI-V transceiver has its own Icom standard address in hexadecimal code. The IC-7800's address is 6Ah.

When 2 or more IC-7800's are connected to an optional CT-17 CI-V LEVEL CONVERTER, rotate the main dial to select a different address for each IC-7800 in the range 01h to 7Fh.

CI-V Transceive	ON

Transceive operation is possible with the IC-7800 connected to other Icom HF transceivers or receivers.

When "ON" is selected, changing the frequency, operating mode, etc. on the IC-7800 automatically changes those of connected transceivers (or receivers) and vice versa.

RS-232C Function	CI-V

Select [RS-232C] connector output data format from CI-V and Decode.

- CI-V : Outputs data in CI-V format. (default)
- Decode : Outputs decoded contents in ASCII code format.

Decode Baud Rate	9600

Selects data transmission speed (Baud rate) when "Decode" is selected in "RS-232C Function" above from 300, 1200, 4800, 9600 and 19200 bps.
(default: 9600)

Keyboard Type	Japanese

Selects the connected keyboard type from Japanese and English. (default: Japanese)

Keyboard Repeat Delay	250ms

Sets the time period for delay within 100 to 1000 msec. in 50 msec. steps. (default: 250 msec.)

When a key of the connected keyboard is pressed and held for the set period, the character is input continuously.

■ Miscellaneous (others) set mode (continued)

Keyboard Repeat Rate 10.9cps

Sets the repeating rate for the connected keyboard within 2.0 to 30.0 cps in 0.1 cps steps.
(default: 10.9 cps) *cps=character per second

When a key of the connected keyboard is pressed and held, the character is repeatedly input with the set speed.

IP Address (Valid after Reboot) 192.168. 0. 1

Sets IP address for the IC-7800.
Turn the transceiver power OFF then ON to effective the setting.

Subnet Mask (Valid after Reboot) 255.255.255. 0 (24bit)

Sets subnet mask for the IC-7800.
Turn the transceiver power OFF then ON to effective the setting.

■ CF card set menu

◇ CF card set screen arrangement

• **CF card set menu**

• **Format menu** (p. 12-26)

• **Setting load screen** (p. 12-24)

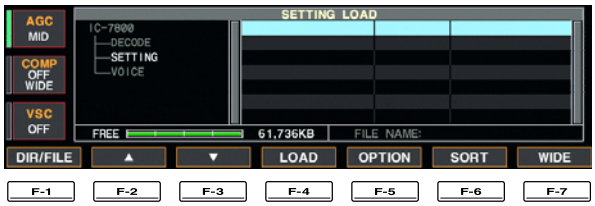

• **Setting save screen** (p. 12-23)

• **Load option set mode** (p. 12-22)

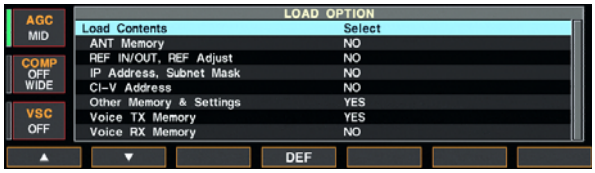

• **Save option set mode** (p. 12-21)

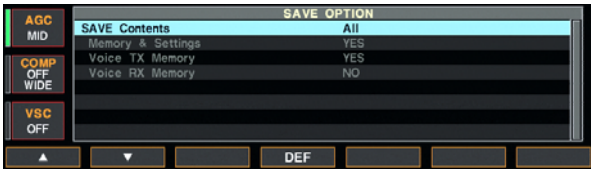

◇ Save option set mode

SAVE Contents	All
Selects file saving condition from All and Select. (default: All)	• All : Saves the all following contents. The following items cannot be selected. • Select : Saves the selected contents only.

Memory & Settings	YES
Selects memory channel contents and other settings saving condition YES and NO. (default: YES).	• YES : Saves memory channel contents and settings of miscellaneous (Other) set mode. • NO : Not saves them.

Voice TX Memory	YES
Selects the voice TX memory saving condition YES and NO. (default: YES).	• YES : Saves the voice TX memory. • NO : Not saves.

Voice RX Memory	NO
Selects the voice RX memory saving condition YES and NO. (default: NO).	• YES : Saves the voice RX memory. • NO : Not saves.

◇ Load option set mode

Load Contents	Select
Selects file loading condition from All and Select. (default: Select)	• All : Loads and sets the all following contents. The following items cannot be selected. • Select : Loads and sets the selected contents only.

ANT Memory	NO
Selects the antenna memory setting loading condition YES and NO. (default: NO).	• YES : Loads and sets the antenna memory. • NO : Use the original antenna memory setting.

REF IN/OUT, REF Adjust	NO
Selects the reference signal setting loading condition YES and NO. (default: NO).	• YES : Loads and sets the reference signal setting. • NO : Use the original reference signal setting.

IP Address, Subnet Mask	NO
Selects the IP address and subnet mask setting loading condition YES and NO. (default: NO).	• YES : Loads and sets the IP address and subnet mask setting. • NO : Use the original IP address and subnet mask setting.

CI-V Address	NO
Selects the CI-V address setting loading condition YES and NO. (default: NO).	• YES : Loads and sets the CI-V address setting. • NO : Use the original CI-V address setting.

Other Memory & Settings	YES
Selects memory channel contents and other settings loading condition YES and NO. (default: YES).	• YES : Loads and sets memory channel contents and other settings. • NO : Use the original memory channel contents and other settings.

Voice TX Memory	YES
Selects the voice TX memory loading condition YES and NO. (default: YES).	• YES : Loads and sets the voice TX memory. • NO : Use the original the voice TX memory.

Voice RX Memory	NO
Selects the voice RX memory loading condition YES and NO. (default: NO).	• YES : Loads and sets the voice RX memory. • NO : Use the original the voice RX memory.

■ File saving

Memory channel contents, set mode settings, etc. can be saved into the CF (Compact Flash) memory card for backup.

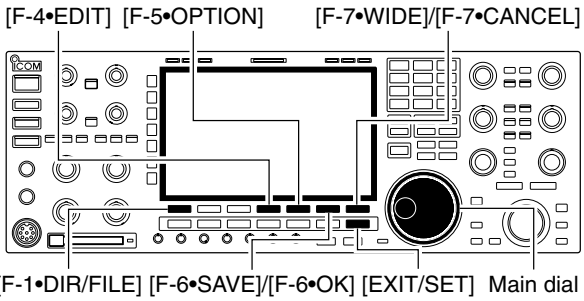

① During set mode menu screen indication, push [F-7•CF CARD] to select CF card set menu screen.
② Push [F-2•SAVE] to select setting save screen.
③ Change the following conditions if desired.

- **File name:**
  1 Push [F-4•EDIT] to select file name edit condition.
    - Push [F-1• DIR/FILE] several times to select the file name, if necessary.
  2 Push [ABC], [123] or [Symbol] to select the character group, then rotate the main dial to select the character.
    - [ABC] : A to Z (capital letters); [123]: 0 to 9 (numerals); [Symbol]: ! # $ % & ‘ ` ^ + – = ( ) [ ] { } _ ~ @ can be selected.
    - Push [F-1•◀] to move the cursor left, push [F-2•▶] to move the cursor right, push [F-3•DEL] to delete a character and push [F-4•SPACE] to insert a space.
  3 Push [EXIT/SET] to set the file name.
- **Save option**
  1 Push [F-5•OPTION] to enter save option set mode.
  2 Push [F-1•▲] or [F-2•▼] to select the item, then rotate the main dial to select the desired setting. (see p. 12-21 for details)
    - “Text” is the default setting.
    - Push [F-4•DEF] for 1 sec. to select the default setting.
  3 Push [EXIT/SET] to return to the previous indication.
- **Saving location**
  1 Push [F-1•DIR/FILE] to select tree view screen.
  2 Select the desired directory or folder in the CF memory card.
    - Push [F-4•◀ ▶] to select the upper directory.
    - Push [F-2•▲] or [F-3•▼] to select folder in the same directory.
    - Push [F-4•◀ ▶] for 1 sec. to select a folder in the directory.
    - Push [F-5•REN/DEL] to rename the folder.
    - Push [F-5•REN/DEL] for 1 sec. to delete the folder.
    - Push [F-6•MAKE] for 1 sec. to making a new folder. (Edit the name with the same manner as the “• File name” above.)
  3 Push [F-1•DIR/FILE] twice to select the file name.

④ Push [F-6•SAVE].
- Confirmation screen appears.

⑤ Push [F-6•OK] to save.
- After the saving is completed, return to CF card set menu automatically.

■ File loading

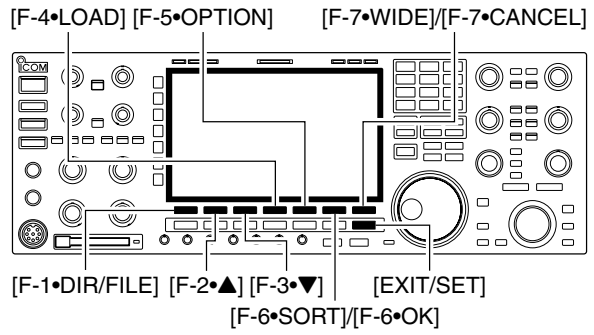

By loading the saved setting file from the CF card, you can easily set up another IC-7800— several operators settings can easily be re-set to one IC-7800.

① During set mode menu screen indication, push [F-7•CF CARD] to select CF card set menu screen.
② Push [F-1•LOAD] to select setting load screen.
- The indicator beside the CF card slot blinks.
- After the CF card contents are displayed, the indicator goes off.

③ Push [F-5•OPTION] to select load option set mode, then set the desired loading conditions, if desired.
- See page 12-22 for details.

④ Push [F-2•▲] or [F-3•▼] to select the desired setting file.
⑤ Push [F-4•LOAD].
- Confirmation screen appears.

⑥ Push [F-6•OK] to starts loading.
- After the lading is completed, the message dialog, “Reboot the IC-7800,” appears.

⑦ Turn the transceiver power OFF then ON to effective the setting.

■ Changing the file name

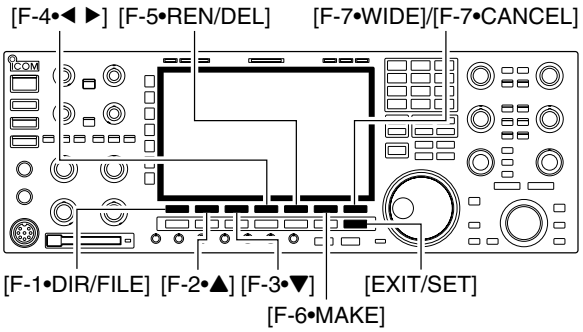

The file name, saved in the CF card, can be re-named from the transceiver as desired.

① During setting save screen indication, push [F-1•DIR/FILE] to selects tree view screen.
- Push [F-2•▲] or [F-3•▼] to select the desired folder.
- “DECODE,” “SETTING” and “VOICE” folders are available as the default.
- After the folder is selected, push [F-2•◀ ▶] for 1 sec. to display content folder(s), if available.

② Push [F-1•DIR/FILE] to select file list screen.

③ Push [F-2•▲] or [F-3•▼] to select the desired file.

④ Push [F-5•REN/DEL] momentarily to select the file name edit condition.

⑤ Push [ABC], [123] or [Symbol] to select the character group, then rotate the main dial to select the character.
- [ABC] : A to Z (capital letters); [123]: 0 to 9 (numerals); [Symbol]: ! # $ % & ‘ ` ^ + – = ( ) [ ] { } _ ~ @ can be selected.
- Push [F-1•◀] to move the cursor left, push [F-2•▶] to move the cursor right, push [F-3•DEL] to delete a character and push [F-4•SPACE] to insert a space.
- Pushing the transceiver’s keypad, [0]–[9], can also enter numerals.

⑥ Push [EXIT/SET] to set the file name.

■ Deleting a file

RECOMMENDATION! Deleted setting file never restorable. Confirm the contents before deleting a setting file is recommended.

① During setting save screen indication, push [F-1•DIR/FILE] to select tree view screen.
- Push [F-2•▲] or [F-3•▼] to select the desired folder.
- "DECODE," "SETTING" and "VOICE" folders are available as the default.
- After the folder is selected, push [F-2•◀ ▶] for 1 sec. to display content folder(s), if available.

② Push [F-1•DIR/FILE] to select file list screen.

③ Push [F-2•▲] or [F-3•▼] to select the desired file to be deleted.

④ Push [F-5•REN/DEL] for 1 sec.
- Confirmation screen appears.

⑤ Push [F-6•OK] to delete.
- After the deleting, return to setting save screen automatically.

■ Formatting the CF card

The all saved data in the CF memory card can be erased.

IMPORTANT! Formatting erases all saved data in the CF memory card. Make a buckup file in your PC, or any other things, is recommended.

① During CF card set menu indication, push [F-4•FORMAT] for 1 sec.
- Confirmation screen appears.

② Push [F-6•OK] to format.
- Push [F-7•CANCEL] to cancel.

③ Returns to CF card set menu indication automatically.

MAINTENANCE Section 13

■ Troubleshooting 13-2
◇ Transceiver power 13-2
◇ Transmit and receive 13-2
◇ Scanning 13-3
◇ Display 13-3
■ Main dial brake adjustment 13-3
■ Voice synthesizer operation 13-3
■ SWR reading 13-4
■ Screen type and font selections 13-4
■ Frequency calibration (approximate) 13-5
■ Opening the transceiver's case 13-6
■ Clock backup battery replacement 13-6
■ Fuse replacement 13-7
■ Resetting the CPU 13-7
■ About protection indications 13-8

■ Troubleshooting

The following chart is designed to help you correct problems which are not equipment malfunctions.
If you are unable to locate the cause of a problem or solve it through the use of this chart, contact you nearest Icom Dealer or Service Center.

◇ Transceiver power

PROBLEM	POSSIBLE CAUSE	SOLUTION	REF.
Power does not come on when the [POWER] switch is pushed.	• Power cable is improperly connected. • The internal power supply is turned OFF. • Circuit breaker is activated.	• Re-connect the AC power cable correctly. • Turn the internal power supply ON. • Check for the cause, then re-set the circuit breaker.	p. 2-4 p. 3-2 —

◇ Transmit and receive

PROBLEM	POSSIBLE CAUSE	SOLUTION	REF.
No sounds come out from the speaker.	• Volume level is too low. • The squelch is closed. • The transceiver is in transmitting condition.	• Rotate [AF] clockwise to obtain a suitable listening level. • Turn [SQL] to 10 o'clock position to open the squelch. • Push [TRANSMIT] to receive or check the SEND line of an external unit, if connected.	p. 3-9 p. 3-9 p. 3-12
Sensitivity is too low, and only strong signals are audible.	• The antenna is not connected properly. • The antenna for another band is selected. • The antenna is not properly tuned. • The attenuator is activated.	• Re-connect to the antenna connector. • Select an antenna suitable for the operating frequency. • Push [TUNER] for 1 sec. to manually tune the antenna. • Push [ATT] several times to select "ATT OFF."	— p. 10-2 p. 10-5 p. 5-9
Received audio is unclear or distorted.	• Wrong operating mode is selected. • PBT function is activated. • Noise blanker is turned ON when receiving a strong signal. • Preamp is activated. • The noise reduction is activated and the [NR] control is too far clockwise.	• Select a suitable operating mode. • Push [PBT CLR] for 1 sec. to reset the function. • Push [NB] to turn the noise blanker OFF. • Push [P.AMP] once or twice to turn the function OFF. • Set the [NR] control for maximum readability.	p. 3-8 p. 5-12 p. 5-17 p. 5-9 p. 5-18
The [ANT] switch does not function	• The antenna switch has not been activated.	• Set the antenna switch in set mode to "Auto" or "Manual."	p. 10-4
Transmitting is impossible.	• The operating frequency is not set to a ham band.	• Set the frequency to a ham band.	p. 3-5
Output power is too low.	• [RF PWR] is set too far counterclockwise • [MIC] is set too far counterclockwise • The antenna for another band is selected. • The antenna is not properly tuned.	• Rotate [RF PWR] clockwise. • Set [MIC] to a suitable position. • Select an antenna suitable for the operating frequency. • Push [TUNER] for 1 sec. to manually tune the antenna.	p. 3-12 p. 3-12 p. 10-2 p. 10-5
No contact possible with another station.	• RIT or ΔTX function is activated. • Split frequency function and/or dualwatch are activated.	• Push [RIT] or [ΔTX] to turn the function OFF. • Push [SPLIT] and/or [DUALWATCH] to turn the function OFF.	pgs. 5-10, 6-4 pgs. 5-16, 6-4
Transmit signal is unclear or distorted.	• [MIC] is set too far clockwise	• Set [MIC] to a suitable position.	p. 3-12
Repeater cannot be accessed.	• Split frequency function is not activated. • Programmed subaudible tone frequency is wrong.	• Push [SPLIT] to to turn the function ON • Reset the frequency using set mode.	p. 6-6 p. 4-32

◇ Scanning

PROBLEM	POSSIBLE CAUSE	SOLUTION	REF.
Programmed scan does not stop.	• Squelch is open.	• Set [SQL] to the threshold point.	p. 3-9
Programmed scan does not start.	• The same frequencies have been programmed in scan edge memory channels P1 and P2.	• Program different frequencies in scan edge memory channel P1 and P2.	p. 8-4
Memory scan does not start	• 2 or more memory channels have not been programmed.	• Program more than 2 memory channels.	p. 8-4
Select memory scan does not start	• 2 or more memory channels have not been designated as select channels.	• Designate more than 2 memory channels as select channels for the scan.	p. 9-7

◇ Display

PROBLEM	POSSIBLE CAUSE	SOLUTION	REF.
The displayed frequency does not change properly.	• The dial lock function is activated. • A set mode screen is selected. • The internal CPU has malfunctioned.	• Push [LOCK] to turn the function OFF. • Push [EXIT/SET] several times to exit the set mode screen. • Reset the CPU.	p. 5-18 p. 12-2 p. 13-7

■ Main dial brake adjustment

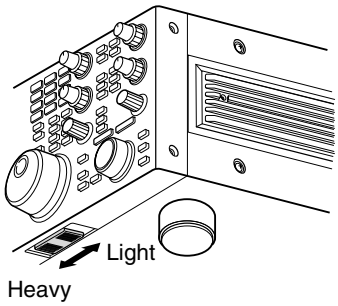

The tension of the main dial may be adjusted to suit you preference.

The brake adjustment is located on the bottom side of the front panel. See the figure at left.

Slide the brake adjustment to comfortable tension level while turing the dial continuously and evenly in one direction.

■ Voice synthesizer operation

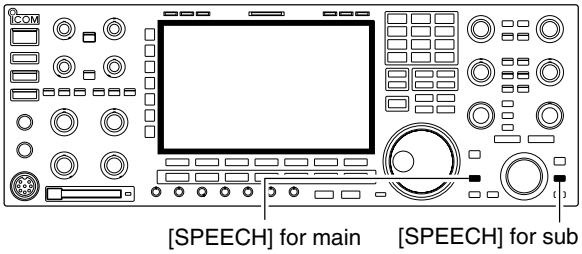

The IC-7800 has built-in voice synthesizer to announce the frequency, mode, etc. (S-meter level can also be announced—p. 12-16) in clear, electronically-generated voice, in English (or Japanese).

➥ Push [SPEECH] to announce the currently selected frequency, etc.
- Push [SPEECH] for 1 sec. to additionally announce the selected mode.

➥ Pushing a mode switch also announces the appropriate mode. (p. 12-16)

The output level of the voice synthesizer can be adjusted in level set mode. (p. 12-5)

■ SWR reading

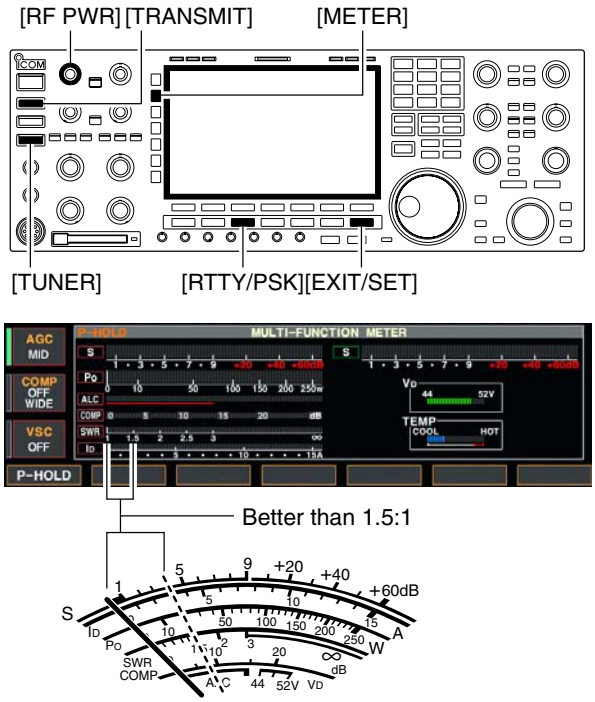

The SWR meter indicates the SWR over the transmission line in all modes.

① Push [TUNER] to turn the antenna tuner OFF.
② Push [METER] for 1 sec. to display multi-function meter.
③ Push [RTTY/PSK] once or twice to select RTTY mode.
④ Push [TRANSMIT].
⑤ Rotate [RF PWR] clockwise past the 12 o'clock position for more than 30 W output power.
⑥ Read the SWR on the SWR meter gage.
⑦ Push [EXIT/SET] to close multi-function meter.

The built-in antenna tuner matches the transmitter to the antenna when the SWR is lower than 3 : 1.

■ Screen type and font selections

• Screen image example— type C

3 types of screen images and 18 types of frequency readout indication fonts are available in the IC-7800.

① Push [EXIT/SET] several times to close multi-function screen, if necessary.
② Push [F-7•SET] to select set mode menu screen.
③ Push [F-3•DISP] to enter display set mode.
④ Push [F-1•▲] or [F-2•▼] to select "Display Type" item when selecting the screen image, select "Display Font" when selecting the frequency readout indication font.
⑤ Rotate the main dial to select the desired screen image or font.
- Screen image is selectable from A, B and C.
- Italic (1)/(2)/(3)/(4), Round (1)/(2)/(3), Shadow (1)/(2)/(3), Qubic (1)/(2)/(3)/(4) and IC-780 (1)/(2)/(3)/(4) are available for the frequency readout font.

⑥ Push [EXIT/SET] twice to exit from display set mode.

■ Frequency calibration (approximate)

A very accurate frequency counter is required to calibrate the frequency of the transceiver. However, a rough check may be performed by receiving radio station WWVH, or other standard frequency signals.

CAUTION: The IC-7800 has been thoroughly adjusted and checked at the factory before being shipped. You should not calibrate frequencies, except for special reasons.

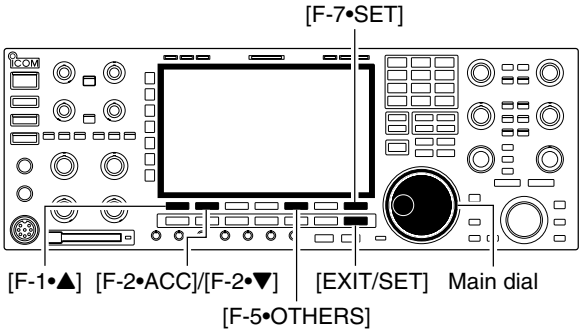

• Calibration marker item

• REF Adjust item

① Push [SSB] to select USB mode.
② Push [PBT CLEAR] for 1 sec. to clear the PBT setting and make sure that the RIT/⊿TX function is not activated.
③ Set the frequency to the standard frequency station minus 1 kHz.
- When receiving WWVH (15.00000 MHz) as a standard frequency, set the operating frequency for 14.99900 MHz.
- Other standard frequency can also be used.

④ Push [EXIT/SET] several times to close a multi-function screen, if necessary.
⑤ Push [F-7•SET] to select set mode menu screen.
⑥ Push [F-5•OTHERS] to enter miscellaneous (others) set mode.
⑦ Push [F-1•▲] several times to select the “Calibration Marker” item.
⑧ Rotate the main dial clockwise to turn the calibration marker ON.
⑨ Push [EXIT/SET] once to return to set mode menu screen.
⑩ Push [F-2•ACC] to enter accessory set mode.
⑪ Push [F-2•▼] several times to select the “REF Adjust” item.
⑫ Rotate the main dial to adjust for a zero beat with the received standard signal as shown at left.
- Zero beat means that two signals are exactly the same frequency, resulting in a single tone being emitted.

⑬ Turn the calibration marker OFF in miscellaneous (others) set mode.
⑭ Push [EXIT/SET] twice to exit set mode.

■ Opening the transceiver's case

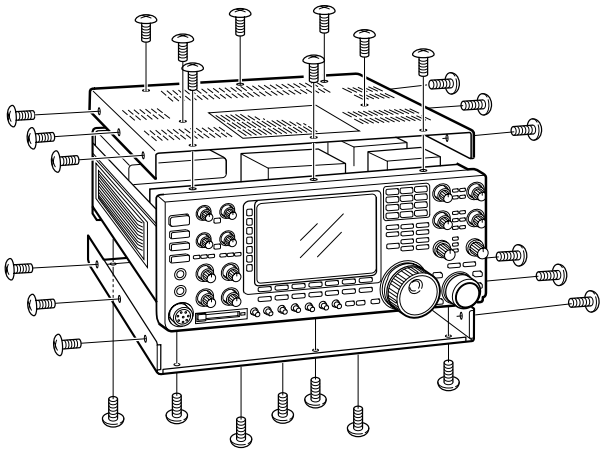

Follow the case opening procedures shown here when you want to replace the clock backup battery or circuitry fuse,

CAUTION!: DISCONNECT the AC power cable from the transceiver before performing any work on the transceiver. Otherwise, there is danger of electric shock and/or equipment damage.

CAUTION!: The transceiver weighs approx. 25 kg (55 lb). 2 peoples should be present to lift up or turn over the transceiver.

① Remove the 8 screws from the top of the transceiver and the 6 screws from the sides, then lift up the top cover.
② Turn the transceiver upside down.

CAUTION: NEVER HOLD THE MAIN DIAL OR ANY OTHER KNOBS when the transceiver is upside down. This may damage the transceiver.

③ Remove 7 screws from the bottom, and the 6 screws from the sides, then lift up the bottom cover.

■ Clock backup battery replacement

The IC-7800 has a lithium backup battery (CR2032) inside for clock and timer functions. The usual life of the backup battery is approximately 2 years.

When the backup battery exhausted, the transceiver transmits and receives normally but cannot retain the current time.

WARNING: DISCONNECT the AC power cable from the AC outlet before removing the transceiver's cover.

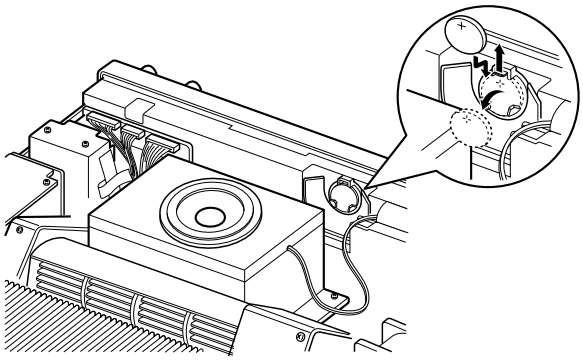

① Remove the top cover as shown above.
② Replace the clock backup battery, located on the front panel as illustrated at left.
• Make sure the battery polarity is correct.
③ Return the top cover to the original position.
④ Set the date and time in time set mode. (p. 11-2)

■ Fuse replacement

When no external DC output is available from [EXT DC] and ACC connectors, the internal fuse may be damaged. Replace the fuse in this case.

WARNING: DISCONNECT the AC power cable from the AC outlet before removing the transceiver's cover.

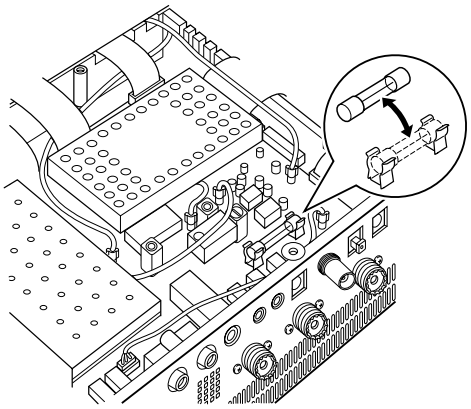

① Remove the bottom cover as shown left.
② Replace the damaged fuse with new, rated one (FGB 2 A) as shown at left.
③ Return the bottom cover to the original position.

■ Resetting the CPU

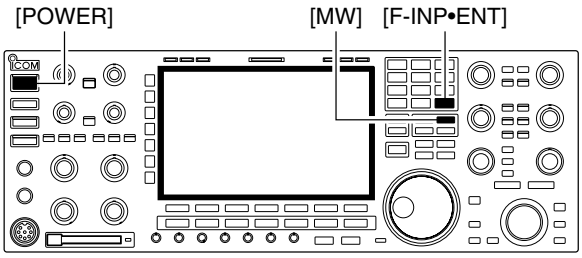

① Turn the main power switch on the rear panel ON.
- Make sure the transceiver power is still OFF.

② While pushing and holding [F-INP•ENT] and [MW], push [POWER] to turn power ON.
- The internal CPU is reset.
- The CPU start up and it takes approx. 5 sec.
- The transceiver displays its initial VFO frequencies when resetting is complete.

③ Correct the set mode settings after resetting, if desired.

NOTE: Resetting **CLEARS** all programmed contents in memory channels and returns programmed values in set mode to default values.

■ About protection indications

The IC-7800 has a 2-step protection function to protect the power amplifiers as follow.

The protector detects the power amplifier temperature and activates when the temperature becomes extremely high.

- **Power down transmission**
  Reduces the transmit output power to 100 W.
  “LMT” appears beside the transmit indicator during transmit.
- **Transmission inhibit**
  Deactivate the transmitter.
  The transmit indicator is displayed in gray during transmit.

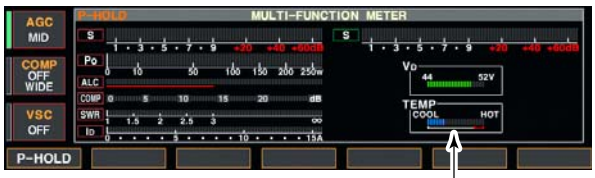

Check the temperature

When the protector is activated, wait until the power amplifier cools down using the transceiver stand-by condition.

NOTE: DO NOT turn the transceiver power OFF. The internal cooling fan does not function, so it will take longer to cool down.

The power amplifier temperature can be confirmed in multi-function meter, TEMP gauge.

CONTROL COMMAND Section 14

■ Remote jack (CI-V) information 14-2
◇ CI-V connection example 14-2
◇ Data format 14-2
◇ Command table 14-9
◇ To send/read memory contents 14-9
◇ Band stacking register 14-9
◇ Codes for memory keyer contents 14-9
◇ Codes for memory name, opening message and clock 2 name contents 14-9
◇ Offset frequency setting 14-10
◇ Repeater tone/tone squelch frequency setting 14-10
◇ SSB transmission passband width setting 14-10
◇ Color setting 14-10
◇ Bandscope edge frequency setting 14-10
◇ Data mode with filter width setting 14-10
◇ Antenna memory setting 14-10

■ Remote jack (CI-V) information

◇ CI-V connection example

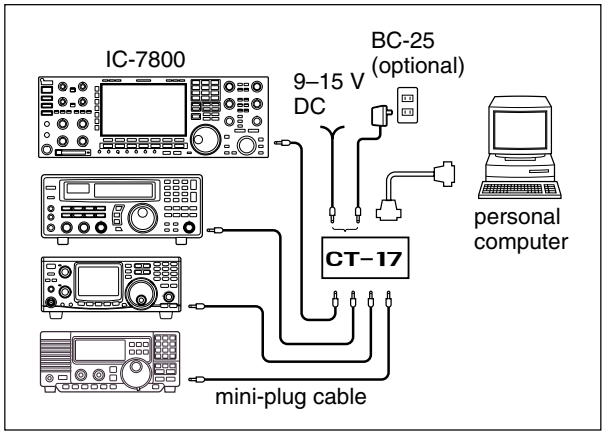

The transceiver can be connected through an optional CT-17 CI-V LEVEL CONVERTER to a PC equipped with an RS-232C port. The Icom Communications Interface-V (CI-V) controls the following functions of the transceiver.

Up to 4 Icom CI-V transceivers or transceivers can be connected to a PC equipped with an RS-232C port. See pgs. 12-18, 12-19 for setting the CI-V condition using set mode.

◇ Data format

The CI-V system can be operated using the following data formats. Data formats differ according to command numbers. A data area or sub command is added for some commands.

Controller to IC-7800

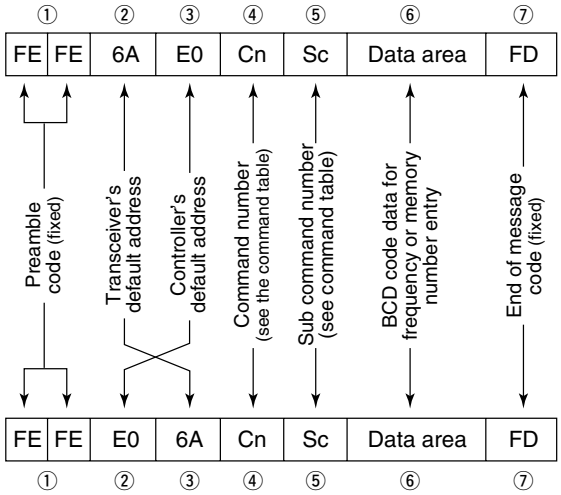

IC-7800 to controller

OK message to controller

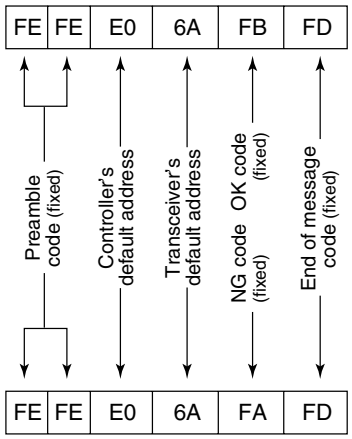

NG message to controller

◇ Command table

Command	Sub command	Description
00	—	Send frequency data
01	Same as command 06	Send mode data
02	—	Read band edge frequencies
03	—	Read operating frequency
04	—	Read operating mode
05	—	Set operating frequency
06	00	Select LSB
	01	Select USB
	02	Select AM
	03	Select CW
	04	Select RTTY
	05	Select FM
	07	Select CW-R
	08	Select RTTY-R
	12	Select PSK
	13	Select PSK-R
07	—	Select VFO mode
	B0	Exchange main and sub bands
	B1	Equalize main and sub bands
	C0	Turn the dualwatch OFF
	C1	Turn the dualwatch ON
	D0	Select main band
	D1	Select sub band
08	—	Select memory mode
	0001–0101*	Select memory channel *P1=0100, P2=0101
09	—	Memory write
0A	—	Memory to VFO
0B	—	Memory clear
0E	00	Scan stop
	01	Programmed/memory scan start
	02	Programmed scan start
	03	⊿F scan start
	12	Fine programmed scan start
	13	Fine ⊿F scan start
	22	Memory scan start
	23	Select memory scan start
	A1–A7	Set ⊿F scan span (A1=±5 kHz; A2=±10 kHz; A3=±20 kHz; A4=±50 kHz; A5=±100 kHz; A6=±500 kHz; A7=±1 MHz)
	B0	Set as non-select channel
	B1	Set as select channel (1=★1; 2=★2; 3=★3; when no data command is specified, the previously set number or "★1" is selected)
	B2	Set the number for select memory scan (0=ALL; 1=★1; 2=★2; 3=★3)
	D0	Set scan resume OFF
	D3	Set scan resume ON
0F	00	Turn the split function OFF
	01	Turn the split function ON
10	00	Select 10 Hz (1 Hz) tuning step
	01	Select 100 Hz tuning step
	02	Select 1 kHz tuning step
	03	Select 5 kHz tuning step
	04	Select 9 kHz tuning step
	05	Select 10 kHz tuning step
	06	Select 12.5 kHz tuning step
	07	Select 20 kHz tuning step
	08	Select 25 kHz tuning step

Command	Sub command	Description
11	—	Select/read attenuator (0=OFF; 1=3 dB; 2=6 dB; 3=9 dB; 4=12 dB; 5=15 dB; 6=18 dB; 7=21 dB)
12	00 + RX ANT	Select/read ANT1 selection (00=RX ANT OFF; 01=RX ANT ON)
	01 + RX ANT	Select/read ANT2 selection (00=RX ANT OFF; 01=RX ANT ON)
	02 + RX ANT	Select/read ANT3 selection (00=RX ANT OFF; 01=RX ANT ON)
	03 + RX ANT	Select/read ANT4 selection (00=RX ANT OFF; 01=RX ANT ON)
13	00	Announce with voice synthesizer (00=all data; 01=frequency and S-meter level; 02=receive mode)
	01	
	02	
14	01 + Level data	[AF] level setting (0=max. CCW to 255=max. CW)
	02 + Level data	[RF] level setting (0=max. CCW to 255=11 o'clock)
	03 + Level data	[SQL] level setting (0=11 o'clock to 255=max. CW)
	05 + Level data	[APF] level setting (0=Pitch–550 Hz, 128=Pitch, 255=Pitch+550 Hz)
	06 + Level data	[NR] level setting (0=min. to 255=max.)
	07 + Level data	Inside [TWIN PBT] setting or IF shift setting (0=max. CCW, 128=center, 255=max. CW)
	08 + Level data	Outside [TWIN PBT] setting (0=max. CCW, 128=center, 255=max. CW)
	09 + Level data	[CW PITCH] setting (0=300 Hz, 128=600 Hz, 255=900 Hz; 25 Hz steps)
	0A + Level data	[RF POWER] setting (0=max. CCW to 255=max. CW)
	0B + Level data	[MIC] setting (0=max. CCW to 255=max. CW)
	0C + Level data	[KEY SPEED] setting (0=max. CCW to 255=max. CW)
	0D + Level data	[NOTCH] setting (0=low freq. to 255=high freq.)
	0E + Level data	[COMP] setting (0=max. CCW to 255=max. CW)
	0F + Level data	[DELAY] setting (0=max. CCW to 255=max. CW)
	11 + Level data	[AGC] control setting (0=max. CCW to 255=max. CW)
	12 + Level data	[NB] control setting (0=max. CCW to 255=max. CW)
	13 + Level data	[DIGI-SEL] setting (0=max. CCW to 255=max. CW)
	14 + Level data	[DRIVE] setting (0=max. CCW to 255=max. CW)
	15 + Level data	[MONI GAIN] setting (0=max. CCW to 255=max. CW)
	16 + Level data	[VOX GAIN] setting (0=max. CCW to 255=max. CW)
	17 + Level data	[ANTI VOX] setting (0=max. CCW to 255=max. CW)
	18 + Level data	[CONTRAST] setting (0=max. CCW to 255=max. CW)
	19 + Level data	[BRIGHT] setting (0=max. CCW to 255=max. CW)

◇ Command table (continued)

Command	Sub command	Description
15	01	Read squelch condition
	02	Read S-meter level
	11	Read RF power meter
	12	Read SWR meter
	13	Read ALC meter
	14	Read COMP meter
	15	Read VD meter
	16	Read ID meter
16	02	Preamp (0=OFF; 1=preamp 1; 2=preamp 2)
	12	AGC selection (0=OFF; 1=Slow; 2=Mid; 3=Fast)
	22	Noise blanker (0=OFF; 1=ON)
	32	Audio peak filter (0=OFF; 1=320 Hz; 2=160 Hz; 3=80 Hz)
	40	Noise reduction (0=OFF; 1=ON)
	41	Auto notch (0=OFF; 1=ON)
	42	Repeater tone (0=OFF; 1=ON)
	43	Tone squelch (0=OFF; 1=ON)
	44	Speech compressor (0=OFF; 1=ON)
	45	Monitor (0=OFF; 1=ON)
	46	VOX function (0=OFF; 1=ON)
	47	Break-in (0=OFF; 1=semi break-in; 2=full break-in)
	48	Manual notch (0=OFF; 1=ON)
	4C	VSC (0=OFF; 1=ON)
	4D	Manual AGC (0=OFF; 1=ON)
	4E	DIGI-SEL (0=OFF; 1=ON)
	4F	Twin peak filter (0=OFF; 1=ON)
	50	Dial lock (0=OFF; 1=ON)
19	00	Read the transceiver ID
1A	00	Send/read memory contents (see p. 14-9 for details)
	01	Send/read band stacking register contents (see p. 14-9 for details)
	02	Send/read memory keyer contents (see p. 14-9 for details)
	03	Send/read the selected filter width (SSB, CW, PSK: 0=50 Hz to 40=3600 Hz; RTTY: 0=50 Hz to 31=2700 Hz; AM: 0=200 Hz to 49=10 kHz)
	04	Send/read the selected AGC time constant (0=OFF, 1=0.1/0.3 sec. to 13=6.0/8.0 sec.)
	050001	Send/read SSB TX Tone (Bass) level (0 =–5 to 10=+5)
	050002	Send/read SSB TX Tone (Treble) level (0=–5 to 10=+5)
	050003	Send/read SSB RX Tone (Bass) level (0 =–5 to 10=+5)
	050004	Send/read SSB RX Tone (Treble) level (0=–5 to 10=+5)
	050005	Send/read AM TX Tone (Bass) level (0 =–5 to 10=+5)
	050006	Send/read AM TX Tone (Treble) level (0=–5 to 10=+5)
	050007	Send/read AM RX Tone (Bass) level (0 =–5 to 10=+5)
	050008	Send/read AM RX Tone (Treble) level (0=–5 to 10=+5)
	050009	Send/read FM TX Tone (Bass) level (0 =–5 to 10=+5)
	050010	Send/read FM TX Tone (Treble) level (0=–5 to 10=+5)

Command	Sub command	Description
1A	050011	Send/read FM RX Tone (Bass) level (0 =–5 to 10=+5)
	050012	Send/read FM RX Tone (Treble) level (0=–5 to 10=+5)
	050013	Send/read SSB TX bandwidth for wide (see p. 14-10 for details)
	050014	Send/read SSB TX bandwidth for mid. (see p. 14-10 for details)
	050015	Send/read SSB TX bandwidth for narrow (see p. 14-10 for details)
	050016	Send/read speech level (0=0% to 255=100%)
	050017	Send/read CW side tone gain (0=min. to 255=max.)
	050018	Send/read CW side tone gain limit (0=OFF, 1=ON)
	050019	Send/read beep gain (0=min. to 255=max.)
	050020	Send/read beep gain limit (0=OFF, 1=ON)
	050021	Send/read headphones output ratio (0=0.60 to 255=1.40)
	050022	Send/read headphone output selection (0=separated, 1=mixed)
	050023	Send/read AF/SQL signal output to ACC-A (0=Main; 1=Sub)
	050024	Send/read AF/SQL signal output to ACC-B (0=Main; 1=Sub)
	050025	Send/read AF output level to ACC-A (0=0% to 255=100%)
	050026	Send/read AF output level to ACC-B (0=0% to 255=100%)
	050027	Send/read S/P DIF output level (0=0% to 255=100%)
	050028	Send/read MOD output level to ACC-A (0=0% to 255=100%)
	050029	Send/read MOD output level to ACC-B (0=0% to 255=100%)
	050030	Send/read S/P DIF MOD output level (0=0% to 255=100%)
	050031	Send/read MOD input connector during DATA OFF (0=MIC; 1=ACC-A; 2=ACC-B; 3=MIC/ACC-A; 4=MIC/ACC-B; 5=ACC-A/ACC-B; 6=MIC/ACC-A/ACC-B; 7=S/P DIF)
	050032	Send/read MOD input connector during DATA1 (0=MIC; 1=ACC-A; 2=ACC-B; 3=MIC/ACC-A; 4=MIC/ACC-B; 5=ACC-A/ACC-B; 6=MIC/ACC-A/ACC-B; 7=S/P DIF)
	050033	Send/read MOD input connector during DATA2 (0=MIC; 1=ACC-A; 2=ACC-B; 3=MIC/ACC-A; 4=MIC/ACC-B; 5=ACC-A/ACC-B; 6=MIC/ACC-A/ACC-B; 7=S/P DIF)
	050034	Send/read MOD input connector during DATA3 (0=MIC; 1=ACC-A; 2=ACC-B; 3=MIC/ACC-A; 4=MIC/ACC-B; 5=ACC-A/ACC-B; 6=MIC/ACC-A/ACC-B; 7=S/P DIF)

◇ Command table (continued)

Command	Sub command	Description
1A	050035	Send/read the band selection for operating frequency band signal output to ACC-A. (0=MAIN, 1=SUB, 2=TX)
	050036	Send/read the band selection for operating frequency band signal output to ACC-A. (0=MAIN, 1=SUB, 2=TX)
	050037	Send/read relay type selection (0=Lead, 1=MOS-FET)
	050038	Send/read main band's external meter output selection (0=Auto, 1=S (main), 2=Po, 3=SWR, 4=ALC, 5=COMP, 6=V_D, 7=I_D)
	050039	Send/read sub band's external meter output selection (0=Auto, 1=S (sub), 2=Po, 3=SWR, 4=ALC, 5=COMP, 6=V_D, 7=I_D)
	050040	Send/read main band's external meter output level (0=0% to 255=100%)
	050041	Send/read sub band's external meter output level (0=0% to 255=100%)
	050042	Send/read reference signal in/out setting (0=OFF, 1=IN, 2=OUT)
	050043	Send/read reference signal frequency setting (0=0% to 255=100%)
	050044	Send/read LCD unit backlight brightness (0=0% to 255=100%)
	050045	Send/read switch indicator brightness (0=0% to 255=100%)
	050046	Send/read screen image type (0=A, 1=B, 2=C)
	050047	Send/read frequency readout font (0=Italic (1), 1=Italic (2), 2=Italic (3), 3=Italic (4), 4=Round (1), 5=Round (2), 6=Round (3), 7=Shadow (1), 8=Shadow (2), 9=Shadow (3), 10=Qubic (1), 11=Qubic (2), 12=Qubic (3), 13=Qubic (4), 14=IC-780 (1), 15=IC-780 (2), 16=IC-780 (3), 17=IC-780 (4))
	050048	Send/read font for other than frequency readout (0=Normal, 1=Slim)
	050049	Send/read meter type (0=Standard, 1=Edgewise, 2=Bar)
	050050	Send/read meter type during wide screen or mini scope indication (0=Edgewise, 1=Bar)
	050051	Send/read peak hold set (0=OFF, 1=ON)
	050052	Send/read memory name indication setting (0=OFF, 1=ON)
	050053	Send/read audio peak filter width pop-up indication setting (0=OFF, 1=ON)
	050054	Send/read manual notch width pop-up indication setting (0=OFF, 1=ON)
	050055	Send/read output signal setting for external display (0=OFF, 1=ON)
	050056	Send/read synchronous pulse level setting (0=L, 1=H)

Command	Sub command	Description
1A	050057	Send/read opening message indication (0=OFF, 1=ON)
	050058	Send/read opening message contents (see p. 14-9 for details)
	050059	Send/read date (20000101=1st Jan. 2001 to 20991231=31st Dec. 2099)
	050060	Send/read time (0000=00:00 to 2359=23:59)
	050061	Send/read clock 2 function (0=OFF, 1=ON)
	050062	Send/read offset time for clock 2 (240001=–24:00 to 240000=+24:00)
	050063	Send/read clock 2 name (up to 3-character; see p. 14-9)
	050064	Send/read calibration marker (0=OFF, 1=ON)
	050065	Send/read confirmation beep (0=OFF, 1=ON)
	050066	Send/read band edge beep (0=OFF, 1=ON)
	050067	Send/read main band's beep audio frequency (50=500 Hz to 200=2000 Hz)
	050068	Send/read sub band's beep audio frequency (50=500 Hz to 200=2000 Hz)
	050069	Send/read quick dualwatch function (0=OFF, 1=ON)
	050070	Send/read quick split set (0=OFF, 1=ON)
	050071	Send/read FM split offset –9.999 to +9.999 MHz for HF (see p. 14-10 for details)
	050072	Send/read FM split offset –9.999 to +9.999 MHz for 50 MHz (see p. 14-10 for details)
	050073	Send/read split lock set (0=OFF, 1=ON)
	050074	Send/read tuner auto start set (0=OFF, 1=ON)
	050075	Send/read PTT tune set (0=OFF, 1=ON)
	050076	Send/read transverter set (0=OFF, 1=ON)
	050077	Send/read transverter offset (see p. 14-10 for details)
	050078	Send/read RTTY mark frequency (0=1275 Hz, 1=1615 Hz, 2=2125 Hz)
	050079	Send/read RTTY shift width (0=170 Hz, 1=200 Hz, 2=425 Hz)
	050080	Send/read RTTY keying polarity (0=Normal, 1=Reverse)
	050081	Send/read PSK tone frequency (0=1000 Hz, 1=1500 Hz, 2=2000 Hz)
	050082	Send/read speech language (0=English, 1=Japanese)
	050083	Send/read speech speed (0=Slow, 1=Fast)
	050084	Send/read S-level speech (0=OFF, 1=ON)
	050085	Send/read speech with a mode switch operation (0=OFF, 1=ON)
	050086	Send/read memo pad numbers (0=5 ch, 1=10 ch)

◇ Command table (continued)

Command	Sub command	Description
1A	050087	Send/read main dial function (0=MAIN, 1=MAIN+SUB)
	050088	Send/read main dial auto TS (0=OFF, 1=Low, 2=High)
	050089	Send/read sub dial auto TS (0=OFF, 1=Low, 2=High)
	050090	Send/read mic. up/down speed (0=Low, 1=High)
	050091	Send/read quick RIT/⊿TX clear function (0=OFF, 1=ON)
	050092	Send/read SSB notch operation (0=Auto, 1=Manual, 2=Auto/Manual)
	050093	Send/read AM notch operation (0=Auto, 1=Manual, 2=Auto/Manual)
	050094	Send/read DIGI-SEL control function (0=DIGI-SEL, 1=APF)
	050095	Send/read band indication for filter set screen (0=Fix, 1=Auto)
	050096	Send/read SSB/CW synchronous tuning function (0=OFF, 1=ON)
	050097	Send/read CW normal side set (0=LSB, 1=USB)
	050098	Send/read PSK normal side set (0=LSB, 1=USB)
	050099	Send/read band setting for audio output from mic. connector (0=MAIN+SUB, 1=SUB)
	050100	Send/read external keypad set for voice memory (0=OFF, 1=ON)
	050101	Send/read external keypad set for keyer memory (0=OFF, 1=ON)
	050102	Send/read CI-V transceive set (0=OFF, 1=ON)
	050103	Send/read RS-232C function (0=CI-V, 1=Decode)
	050104	Send/read RS-232C decode speed (0=300, 1=1200, 2=4800, 3=9600, 4=19200)
	050105	Send/read keyboard type (0=English, 1=Japanese)
	050106	Send/read keyboard repeat delay (10=100 msec. to 100=1000 msec.)
	050107	Send/read keyboard repeat speed (0=2.0 cps to 31=30.0 cps)
	050108	Send/read IP address set (0000000000000000=0.0.0.0 to 0255025502550255=255.255.255.255)
	050109	Send/read subnet mask (0=0.0.0.0 to 30=255.255.255.252)
	050110	Send/read scope indication during TX (0=OFF, 1=ON)
	050111	Send/read scope max. hold (0=OFF, 1=ON)
	050112	Send/read scope center frequency set (0=Filter center, 1=Carrier point center, 2=Carrier point center (Abs. Freq.))
	050113	Send/read waveform color for receiving signal (see p. 14-10 for details)
	050114	Send/read waveform color for max. hold (see p. 14-10 for details)

Command	Sub command	Description
1A	050115	Send/read scope sweep speed for ±2.5 kHz span (0=Slow, 1=Mid., 2=Fast)
	050116	Send/read scope sweep speed for ±5 kHz span (0=Slow, 1=Mid., 2=Fast)
	050117	Send/read scope sweep speed for ±10 kHz span (0=Slow, 1=Mid., 2=Fast)
	050118	Send/read scope sweep speed for ±25 kHz span (0=Slow, 1=Mid., 2=Fast)
	050119	Send/read scope sweep speed for ±50 kHz span (0=Slow, 1=Mid., 2=Fast)
	050120	Send/read scope sweep speed for ±100 kHz span (0=Slow, 1=Mid., 2=Fast)
	050121	Send/read scope sweep speed for ±250 kHz span (0=Slow, 1=Mid., 2=Fast)
	050122	Send/read scope edge frequencies for 0.03 to 1.60 MHz band (see p. 14-10 for details)
	050123	Send/read scope edge frequencies for 1.60 to 2.00 MHz band (see p. 14-10 for details)
	050124	Send/read scope edge frequencies for 2.00 to 6.00 MHz band (see p. 14-10 for details)
	050125	Send/read scope edge frequencies for 6.00 to 8.00 MHz band (see p. 14-10 for details)
	050126	Send/read scope edge frequencies for 8.00 to 11.00 MHz band (see p. 14-10 for details)
	050127	Send/read scope edge frequencies for 11.00 to 15.00 MHz band (see p. 14-10 for details)
	050128	Send/read scope edge frequencies for 15.00 to 20.00 MHz band (see p. 14-10 for details)
	050129	Send/read scope edge frequencies for 20.00 to 22.00 MHz band (see p. 14-10 for details)
	050130	Send/read scope edge frequencies for 22.00 to 26.00 MHz band (see p. 14-10 for details)
	050131	Send/read scope edge frequencies for 26.00 to 30.00 MHz band (see p. 14-10 for details)
	050132	Send/read scope edge frequencies for 30.00 to 45.00 MHz band (see p. 14-10 for details)
	050133	Send/read scope edge frequencies for 45.00 to 60.00 MHz band (see p. 14-10 for details)
	050134	Send/read auto voice monitor set (0=OFF, 1=ON)
	050135	Send/read voice memory short play time (3=3 sec. to 10=10 sec.)
	050136	Send/read voice memory normal record time (5= 5 sec. to 15=15 sec.)

◇ Command table (continued)

Command	Sub command	Description
1A	050137	Send/read contest number style (0=Normal, 1=190→ANO, 2=190→ANT, 3=90→NO, 4=90→NT)
	050138	Send/read count up trigger channel (1=M1, 2=M2, 3=M3, 4=M4)
	050139	Send/read present number (1–9999)
	050140	Send/read CW keyer repeat time (1=1 sec. to 60=60 sec.)
	050141	Send/read CW keyer dot/dash ratio (28=1:1:2.8 to 45=1:1:4.5)
	050142	Send/read rise time (0=2 msec., 1=4 msec., 2=6 msec., 3=8 msec.)
	050143	Send/read paddle polarity (0=Normal, 1=Reverse)
	050144	Send/read keyer type (0=Straight, 1=Bug-key, 2=ELEC-Key)
	050145	Send/read mic. up/down keyer set (0=OFF, 1=ON)
	050146	Send/read RTTY decode USOS (0=OFF, 1=ON)
	050147	Send/read RTTY decode new line code (0=CR,LF,CR+LF, 1=CR+LF)
	050148	Send/read RTTY diddle (0=OFF, 1=Blank, 2=Letter)
	050149	Send/read RTTY TX USOS (0=OFF, 1=ON)
	050150	Send/read RTTY auto CR+LF by TX (0=OFF, 1=ON)
	050151	Send/read RTTY time stamp set (0=OFF, 1=ON)
	050152	Send/read clock selection for time stamp (0=Local time, 1=Clock 2)
	050153	Send/read frequency stamp (0=OFF, 1=ON)
	050154	Send/read received text font color (see p. 14-10 for details)
	050155	Send/read transmitted text font color (see p. 14-10 for details)
	050156	Send/read time stamp text font color (see p. 14-10 for details)
	050157	Send/read text font color in TX buffer (see p. 14-10 for details)
	050158	Send/read PSK time stamp set (0=OFF, 1=ON)
	050159	Send/read clock selection for time stamp (0=Local time, 1=Clock 2)
	050160	Send/read frequency stamp (0=OFF, 1=ON)
	050161	Send/read received text font color (see p. 14-10 for details)
	050162	Send/read transmitted text font color (see p. 14-10 for details)
	050163	Send/read time stamp text font color (see p. 14-10 for details)
	050164	Send/read text font color in TX buffer (see p. 14-10 for details)
	050165	Send/read scan speed (0=Low, 1=High)
	050166	Send/read scan resume (0=OFF, 1=ON)
	050167	Send/read antenna selection for 0.03 to 1.60 MHz band (see p. 14-10 for details)

Command	Sub command	Description
1A	050168	Send/read antenna selection for 1.60 to 2.00 MHz band (see p. 14-10 for details)
	050169	Send/read antenna selection for 2.00 to 6.00 MHz band (see p. 14-10 for details)
	050170	Send/read antenna selection for 6.00 to 8.00 MHz band (see p. 14-10 for details)
	050171	Send/read antenna selection for 8.00 to 11.00 MHz band (see p. 14-10 for details)
	050172	Send/read antenna selection for 11.00 to 15.00 MHz band (see p. 14-10 for details)
	050173	Send/read antenna selection for 15.00 to 20.00 MHz band (see p. 14-10 for details)
	050174	Send/read antenna selection for 20.00 to 22.00 MHz band (see p. 14-10 for details)
	050175	Send/read antenna selection for 22.00 to 26.00 MHz band (see p. 14-10 for details)
	050176	Send/read antenna selection for 26.00 to 30.00 MHz band (see p. 14-10 for details)
	050177	Send/read antenna selection for 30.00 to 45.00 MHz band (see p. 14-10 for details)
	050178	Send/read antenna selection for 45.00 to 60.00 MHz band (see p. 14-10 for details)
	050179	Send/read antenna temporary memory set (0=OFF, 1=ON)
	050180	Send/read antenna selection (0=OFF, 1=Manual, 2=Auto)
	050181	Send/read usage for ANT2 (0=OFF, 1=TX/RX)
	050182	Send/read usage for ANT3 (0=OFF, 1=TX/RX)
	050183	Send/read usage for ANT4 (0=OFF, 1=TX/RX, 2= RX)
	050184	Send/read VOX delay (0=0.0 sec. to 20=2.0 sec.)
	050185	Send/read VOX voice delay (0=OFF, 1=Short, 2=Long)
	050186	Send/read NB depth (0=1 to 9=10)
	050187	Send/read NB width (0=0 to 255=255)
	06	Send/read DATA mode with filter set (see p. 14-10 for detail)
	07	Send/read SSB transmit bandwidth (0=WIDE, 1=MID, 2=NAR)
	08	Send/read DSP filter shape (0= sharp, 1= soft)
	09	Send/read roofing filter set (0=6 kHz, 1=15 kHz)
	0A	Send/read manual notch width (0=Wide, 1=Mid., 2=Nar.)
	10	Send/read lock function set (0=OFF, 1=ON)

◇ Command table (continued)

Command	Sub command	Description
1B	00	Set/read repeater tone frequency (see p. 14-10 for details)
	01	Set/read TSQL tone frequency (see p. 14-10 for details)
1C	00	Set/read the transceiver's condition (0=Rx; 1=Tx)
	01	Set/read antenna tuner condition (0=OFF, 1=ON, 2=Start tuning or while tuning)

◇ To send/read memory contents

When sending or reading memory contents, additional code as follows must be added to appoint the memory channel.

➥ Additional code: 0000–0101 (0100=P1, 0101=P2)

◇ Band stacking register

To send or read the desired band stacking register's contents, combined code of the frequency band and register codes as follows are used.

For example, when sending/reading the oldest contents in the 21 MHz band, the code "0703" is used.

• Frequency band code

Code	Frequency band	Frequency range (unit: MHz)
01	1.8	1.800000– 1.999999
02	3.5	3.400000– 4.099999
03	7	6.900000– 7.499999
04	10	9.900000–10.499999
05	14	13.900000–14.499999
06	18	17.900000–18.499999
07	21	20.900000–21.499999
08	24	24.400000–25.099999
09	28	28.000000–29.999999
10	50	50.000000–54.000000
12	GENE	Other than above

• Register code

Code	Registered number
01	1 (latest)
02	2
03	3 (oldest)

◇ Codes for memory keyer contents

To send or read the desired memory keyer contents, the channel and character codes as follows are used.

• Channel code

Code	Channel number
01	M1
02	M2
03	M3
04	M4

• Character's code

Character	ASCII code	Description
0–9	30–39	Numerals
A–Z	41–5A	Alphabetical characters
space	20	Word space
/	2F	Symbol
?	3F	Symbol
,	2C	Symbol
.	2E	Symbol
^	5E	e.g., to send $\overline{\text{BT}}$, enter ^4254
*	2A	Inserts contest number (can be used for 1 channel only)

◇ Codes for memory name, opening message and clock 2 name contents

To send or read the desired memory name settings, the character codes, instructed codes for memory keyer contents as above, and follows are additionally used.

• Character's code— Alphabetical characters

Character	ASCII code	Character	ASCII code
a–z	61–7A	—	—

• Character's code— Symbols

Character	ASCII code	Character	ASCII code
!	21	#	23
$	24	%	25
&	26	¥	5C
?	3F	”	22
’	27	`	60
+	2B	–	2D
:	3A	;	3B
=	3D	<	3C
>	3E	(	28
)	29	[	5B
]	5D	{	7B
}	7D	|	7C
_	5F	‾	7E
@			

◇ Offset frequency setting

The following data sequence is used when sending or reading the offset frequency setting.

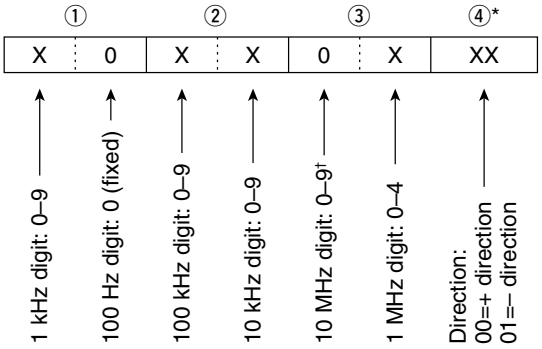

*No need to enter for transverter offset frequency setting.
†Transverter offset only; Fix to '0' for split offset setting.

◇ Repeater tone/tone squelch frequency setting

The following data sequence is used when sending or reading the tone frequency setting.

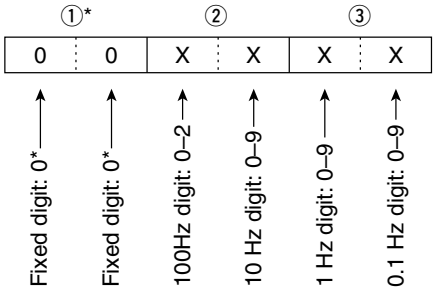

*Not necessary when setting a frequency.

◇ SSB transmission passband width setting

The following data sequence is used when sending or reading the SSB transmission passband width setting.

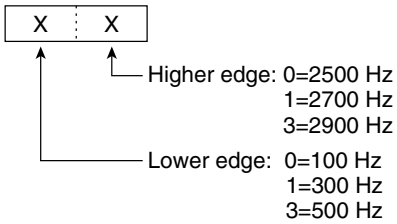

◇ Color setting

The following data sequence is used when sending or reading the color setting.

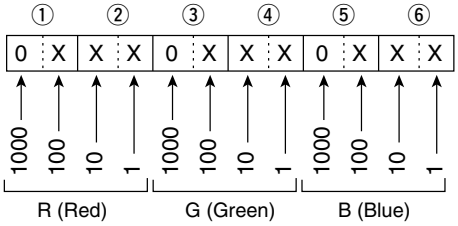

Using 0000–0255 for each color element.

◇ Bandscope edge frequency setting

The following data sequence is used when sending or reading the bandscope edge frequency setting.

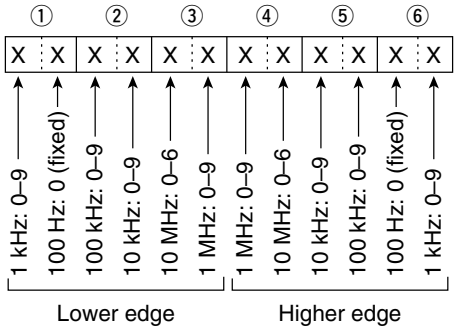

◇ Data mode with filter width setting

The following data sequence is used when sending or reading the data mode with filter width setting.

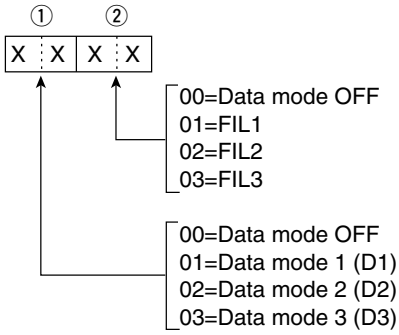

◇ Antenna memory setting

The following codes are used when sending or reading the antenna memory setting.
0=ANT1, 1=ANT2, 2=ANT3, 3=ANT4,
4*=TX: ANT1, RX: ANT4, 5*=TX: ANT2, RX: ANT4,
6*=TX: ANT3, RX: ANT4

*RX should be selected for ANT4

SPECIFICATIONS AND OPTIONS Section 15

■ Specifications 15-2
◇ General 15-2
◇ Transmitter 15-2
◇ Receiver 15-3
◇ Antenna tuner 15-3
■ Options 15-4

■ Specifications

◇ General

• **Frequency coverage** (unit: MHz)	:
Receiver	0.030000–60.000000*1
Transmitter	1.800000–1.999999*2, 3.500000–3.999999*2, 5.330500*3, 5.346500*3, 5.366500*3, 5.371500*3, 5.403500*3, 7.000000–7.300000*2, 10.100000–10.150000*2, 14.000000–14.350000*2, 18.068000–18.168000*2, 21.000000–21.450000*2, 24.890000–24.990000*2, 28.000000–29.700000*2, 50.000000–54.000000*2
	*1Some frequency ranges are not guaranteed. *2Depending on versions. *3USA version only.
• **Operating mode**	: USB, LSB, CW, RTTY, PSK31, AM, FM
• **Number of memory channels**	: 101 (99 regular, 2 scan edges)
• **Antenna connector**	: SO-239×4 (antenna impedance: 50 Ω)
• **Operating temperature range**	: 0˚C to +50˚C; +32˚F to +122˚F
• **Frequency stability**	: Less than ±0.05 ppm (0–50˚C; 32–122˚F)
• **Frequency resolution**	: 1 Hz
• **Power supply requirement**	: 85–265 V AC (universal input)
• **Power consumption**	:
Power OFF Stand-by	10 VA typical
Receive Stand-by	200 VA typical
Max. audio	210 VA typical
Transmit at 200 W	800 VA
• **Dimensions** (projections not included)	: 424×149×435 mm; 16 11/16×5 7/8×17 3/16 in
• **Weight**	: Approx. 25 kg; 55 lb
• **ACC 1 connectors**	: 8-pin DIN connector×2
• **ACC 2 connectors**	: 7-pin DIN connector×2
• **Display***	: 7-inch (diagonal) TFT color LCD (800×480)
• **EXT-DISPLAY connector**	: D-sub 15S
• **CI-V connector**	: 2-conductor 3.5 (d) mm (1/8″)
• **RS-232C connector**	: D-sub 9-pin
• **KEYBOARD connector**	: USB

◇ Transmitter

• **Transmit output power**	:
SSB, CW, RTTY, PSK31, FM	5–200 W
AM	5–50 W
137 kHz band	More than –20 dBm (Except for USA and Korean versions)
• **Modulation system**	:
SSB	P.S.N. modulation
AM	Low power modulation
FM	Phase modulation
• **Spurious emission**	: More than 60 dB (HF bands)
	More than 70 dB (50 MHz band)
• **Carrier suppression**	: More than 63 dB (HF bands)
	More than 73 dB (50 MHz band)
• **Unwanted side-band suppression**	: More than 80 dB
• **⊿TX variable range**	: ±9.999 kHz
• **Microphone connector**	: 8-pin connector (600 Ω)
• **ELEC-KEY connector**	: 3-conductor 6.35 (d) mm (1/4″)
• **KEY connector**	: 3-conductor 6.35 (d) mm (1/4″)
• **RELAY connector**	: Phono (RCA)
• **ALC connector**	: Phono (RCA)

◇ Receiver

• **Receive system**	:	Double conversion superheterodyne system
• **Intermediate frequencies**	:	
1st		64.455 MHz (MAIN band)
		64.555 MHz (SUB band)
2nd		36 kHz
• **Sensitivity**	:	
SSB, CW, RTTY (BW=2.4 kHz, 10 dB S/N)		
0.100–1.799 MHz		0.5 µV (pre-amp 1 ON)
1.800–29.990 MHz		0.16 µV (pre-amp 1 ON)
50.000–54.000 MHz		0.13 µV (pre-amp 2 ON)
AM (BW=6 kHz, 10 dB S/N)		
0.100–1.799 MHz		6.3 µV (pre-amp 1 ON)
1.800–29.990 MHz		2 µV (pre-amp 1 ON)
50.000–54.000 MHz		1 µV (pre-amp 2 ON)
FM (BW=15 kHz, 12 dB SINAD)		
28.000–29.990 MHz		0.5 µV (pre-amp 1 ON)
50.000–54.000 MHz		0.32 µV (pre-amp 2 ON)
• **Selectivity**	:	
SSB, RTTY (BW=2.4 kHz)		More than 2.4 kHz/–3 dB
		Less than 3.6 kHz/–60 dB
CW (BW=500 Hz)		More than 500 Hz/–3 dB
		Less than 700 Hz/–60 dB
AM (BW=6 kHz)		More than 6.0 kHz/–3 dB
		Less than 15.0 kHz/–60 dB
FM (BW=15 kHz)		More than 12.0 kHz/–3 dB
		Less than 20.0 kHz/–60 dB
• **Spurious and image rejection ratio**	:	More than 70 dB (except IF through on 50 MHz band)
• **Squelch sensitivity**	:	
SSB, CW, RTTY, PSK31		Less than 5.6 µV
FM		Less than 1 µV
• **RIT variable range**	:	±9.999 kHz
• **Audio output power**	:	More than 2.6 W at 10% distortion with an 8 Ω load
• **PHONES connector**	:	3-conductor 6.35 (d) mm (¼″)
• **EXT-SP connectors**	:	2-conductor 3.5 (d) mm (⅛″)/8 Ω×2 (for main and sub)

◇ Antenna tuner

• **Matching impedance range**	:	16.7 to 150 Ω unbalanced (HF bands; VSWR better than 3:1)
		20 to 125 Ω unbalanced (50 MHz band; VSWR better than 2.5:1)
• **Minimum operating input**	:	8 W (HF bands)
		15 W (50 MHz band)
• **Tuning accuracy**	:	VSWR 1.5:1 or less
• **Insertion loss** (after tuning)	:	Less than 1.0 dB

*The LCD display may have cosmetic imperfections that appear as small or dark spots. This is not a malfunction or defect, but a normal characteristic of LCD displays.

Spurious may be received near the following frequencies. These are made in the internal circuit and does not indicate a transceiver malfunction.

• 0.150 MHz • 10.490 MHz

All stated specifications are typical and subject to change without notice or obligation.

■ Options

• **IC-PW1** HF/50 MHz ALL BAND 1 kW LINEAR AMPLIFIER

Full-duty 1 kW linear amplifier including an automatic antenna tuner. Has automatic tuning and band selection capability. Full break-in (QSK) operation is possible. The amplifier/power supply unit and the remote control unit are separated.

*The IC-PW1 does not comply with European Harmonised Standard regulations. Please do not use this equipment within European countries.

• **SM-20** DESKTOP MICROPHONE

Unidirectional, electret microphone for base station operation. Includes [UP]/[DOWN] switches and a low cut function.

• **CT-17** CI-V LEVEL CONVERTER

For remote transceiver control using a PC. You can change frequencies, operating mode, memory channels, etc. (software is not included)

• **SP-20** EXTERNAL SPEAKER

4 audio filters; headphone jack; can connect to 2 transceivers.

• Input impedance : 8 Ω
• Max. input power : 5 W

• **HM-36** HAND MICROPHONE

Hand microphone equipped with [UP]/[DOWN] switches.

Please record the serial number of your IC-7800 transceiver below for future servicing reference:

Serial Number :

Date of purchase :

Place where purchased :

Count on us!

Icom Inc.
1-1-32 Kamiminami, Hirano-ku, Osaka 547-0003, Japan