APPENDIX 1

SAR Measurement Data

TABLE OF CONTENTS

EXHIBIT 1. HEAD SAR MEASUREMENT SUMMARY 4

FILE NAME: BP-280 SC25U 158MM 420MHZ.DA52:0 6
FILE NAME: BP-280 SC57U 140MM 457MHZ.DA52:0 8
FILE NAME: BP-280 SC73US 60MM 460MHZ.DA52:0 10
FILE NAME: BP-280 SC26US 60MM 450MHZ.DA52:0 12
FILE NAME: BP-278 SC01U 84MM 400MHZ.DA52:0 14
FILE NAME: BP-278 SC02U 84MM 400MHZ.DA52:0 16
FILE NAME: BP-279 SC25U 158MM 420MHZ.DA52:0 18
FILE NAME: BP-278 SC25U 158MM 420MHZ.DA52:0 20

EXHIBIT 2. HEAD SAR – CUT ANTENNA MEASUREMENT 22

FILE NAME: BP-280 SC61UC 165MM 400MHZ.DA52:0 22
FILE NAME: BP-280 SC61UC 156MM 420MHZ.DA52:0 24
FILE NAME: BP-280 SC61UC 142MM 460MHZ.DA52:0 26
FILE NAME: BP-280 SC61UC 148MM 460MHZ.DA52:0 28
FILE NAME: BP-279 SC61UC 148MM 460MHZ.DA52:0 30
FILE NAME: BP-278 SC61UC 148MM 460MHZ.DA52:0 32
FILE NAME: BP-278 SC61UC 142MM 460MHZ.DA52:0 34

EXHIBIT 3. BODY SAR MEASUREMENT SUMMARY 36

FILE NAME: BP-280 SC25U 158MM 420MHZ.DA52:0 38
FILE NAME: BP-280 SC25U 158MM 430MHZ.DA52:0 40
FILE NAME: BP-280 SC57U 140MM 456MHZ.DA52:0 42
FILE NAME: BP-280 SC25U 158MM 410MHZ.DA52:0 44
FILE NAME: BP-280 SC25U 158MM 400MHZ.DA52:0 46
FILE NAME: BP-280 SC57U 140MM 460MHZ.DA52:0 48
FILE NAME: BP-280 SC26US 60MM 450MHZ.DA52:0 50
FILE NAME: BP-280 SC01U 84MM 400MHZ.DA52:0 52
FILE NAME: BP-280 SC02U 84MM 400MHZ.DA52:0 54
FILE NAME: BP-279 SC25U 158MM 420MHZ.DA52:0 56
FILE NAME: BP-279 SC25U 158MM 410MHZ.DA52:0 58
FILE NAME: BP-279 SC25U 158MM 430MHZ.DA52:0 60
FILE NAME: BP-279 SC73US 60MM 460MHZ.DA52:0 62
FILE NAME: BP-278 SC25U 158MM 420MHZ.DA52:0 64
FILE NAME: BP-278 SC25U 158MM 430MHZ.DA52:0 66

EXHIBIT 4. BODY SAR MEASUREMENT – CUT ANTENNA SUMMARY 68

FILE NAME: BP-280 SC61UC 165MM 400MHZ.DA52:0 68
FILE NAME: BP-280 SC61UC 156MM 460MHZ.DA52:0 70
FILE NAME: BP-280 SC61UC 148MM 460MHZ.DA52:0 72
FILE NAME: BP-280 SC61UC 148MM 470MHZ.DA52:0 74
FILE NAME: BP-280 SC61UC 148MM 440MHZ.DA52:0 76
FILE NAME: BP-280 SC61UC 148MM 420MHZ.DA52:0 78
FILE NAME: BP-280 SC61UC 148MM 400MHZ.DA52:0 80
FILE NAME: BP-280 SC61UC 142MM 460MHZ.DA52:0 82
FILE NAME: BP-280 SC61UC 142MM 470MHZ.DA52:0 84
FILE NAME: BP-280 SC61UC 142MM 440MHZ.DA52:0 86
FILE NAME: BP-280 SC61UC 142MM 440MHZ.DA52:0 88
FILE NAME: BP-280 SC61UC 142MM 400MHZ.DA52:0 90
FILE NAME: BP-279 SC61UC 142MM 460MHZ.DA52:0 92
FILE NAME: BP-279 SC61UC 148MM 440MHZ.DA52:0 94
FILE NAME: BP-279 SC61UC 148MM 470MHZ.DA52:0 96

FILE NAME: BP-279 SC61UC 142MM 440MHZ.DA52:0 98
FILE NAME: BP-279 SC61UC 142MM 470MHZ.DA52:0 100
FILE NAME: BP-278 SC61UC 142MM 460MHZ.DA52:0 102
FILE NAME: BP-278 SC61UC 148MM 460MHZ.DA52:0 104

EXHIBIT 1. HEAD SAR MEASUREMENT SUMMARY

Antenna	Power (W)	CH	CH. Freq (MHz)	HEAD SAR 1g (W/Kg) BP-278 1300mAh	BP-279 1485mAh	BP-280 2280mAh
FA-SC25U 400-430 MHz Green Tip 158mm	3.70	1	400			
	3.72	2	410			
	3.77	4	420	3.99	4.05	4.13
	3.73	7	430			
FA-SC57U 430-470 MHz Red Tip 140mm	3.73	7	430			
	3.78	11	443.33			
	3.91	13	456.66			2.75
	3.81	15	470			
FA-SC73US 450-490 MHz Red Tip 60mm	3.83	12	450			
	3.84	14	460			2.74
	3.81	15	470			
FASC26US 400-450 MHz Green Tip 60mm	3.70	1	400			
	3.76	3	412.5			
	3.76	6	425			
	3.73	9	437.5			
	3.83	12	450			1.48
FA-SC01U 350-400 MHz Red Tip 84mm	3.70	1	400			0.65
FA-SC02U 330-380 MHz Blue Tip 84mm	3.70	1	400			0.28

Antenna	Power (W)	CH	CH. Freq (MHz)	HEAD SAR 1g (W/Kg) BP-278 1300mAh	BP-279 1485mAh	BP-280 2280mAh
Cut Antenna 380-520MHz						
FA-SC61UC 400MHz White Tip 165 mm	3.7	1	400			
	3.77	5	420			
	3.80	10	440			
	3.84	14	460			3.04
	3.81	15	470			
FA-SC61UC 420MHz White Tip 156mm	3.7	1	400			
	3.77	5	420			
	3.80	10	440			
	3.84	14	460			2.67
	3.81	15	470			
FA-SC61UC 440MHz White Tip 148mm	3.7	1	400			
	3.77	5	420			
	3.80	10	440			
	3.84	14	460	3.85	3.82	3.60
	3.81	15	470			
FA-SC61UC 460MHz White Tip 142mm	3.7	1	400			
	3.77	5	420			
	3.80	10	440			
	3.84	14	460	3.32	3.4	3.27
	3.81	15	470			

Test Laboratory: Ultratech Group of Labs

FILE NAME: BP-280 SC25U 158MM 420MHZ.DA52:0

DUT: DUT Sample Brick w. Antenna; Type: Sample; Serial: 00000220-0
Program Name: System Performance Check at 450 MHz

Communication System: UID 10000, CW; Frequency: 430 MHz;Duty Cycle: 1:1
Medium parameters used: f = 430 MHz; σ = 0.859 S/m; ε_r = 44.707; ρ = 1000 kg/m^3
Phantom section: Flat Section

DASY4 Configuration:
- Probe: EX3DV4 - SN3673; ConvF(10.35, 10.35, 10.35); Calibrated: 10/17/2014;
- Sensor-Surface: 1.4mm (Mechanical Surface Detection)
- Electronics: DAE4 Sn874; Calibrated: 3/24/2014
- Phantom: ELI 4.0; Type: QD OVA 001 BB; Serial: 1057
- ; SEMCAD X Version 14.6.10 (7331)

ICOM IC-F2000D 400-470 MHz Body/Head Frontal, d=25mm, Pin=4W (EX-Probe)/Area Scan (41x161x1): Interpolated grid: dx=1.500 mm, dy=1.500 mm
Maximum value of SAR (interpolated) = 5.30 W/kg

ICOM IC-F2000D 400-470 MHz Body/Head Frontal, d=25mm, Pin=4W (EX-Probe)/Zoom Scan (5x5x7) (6x5x7)/Cube 0: Measurement grid: dx=7.5mm, dy=7.5mm, dz=5mm
Reference Value = 81.43 V/m; Power Drift = -018 dB
Peak SAR (extrapolated) = 5.76 W/kg
SAR(1 g) = 4.13 W/kg; SAR(10 g) = 3.09 W/kg (SAR corrected for target medium)
Maximum value of SAR (measured) = 5.16 W/kg

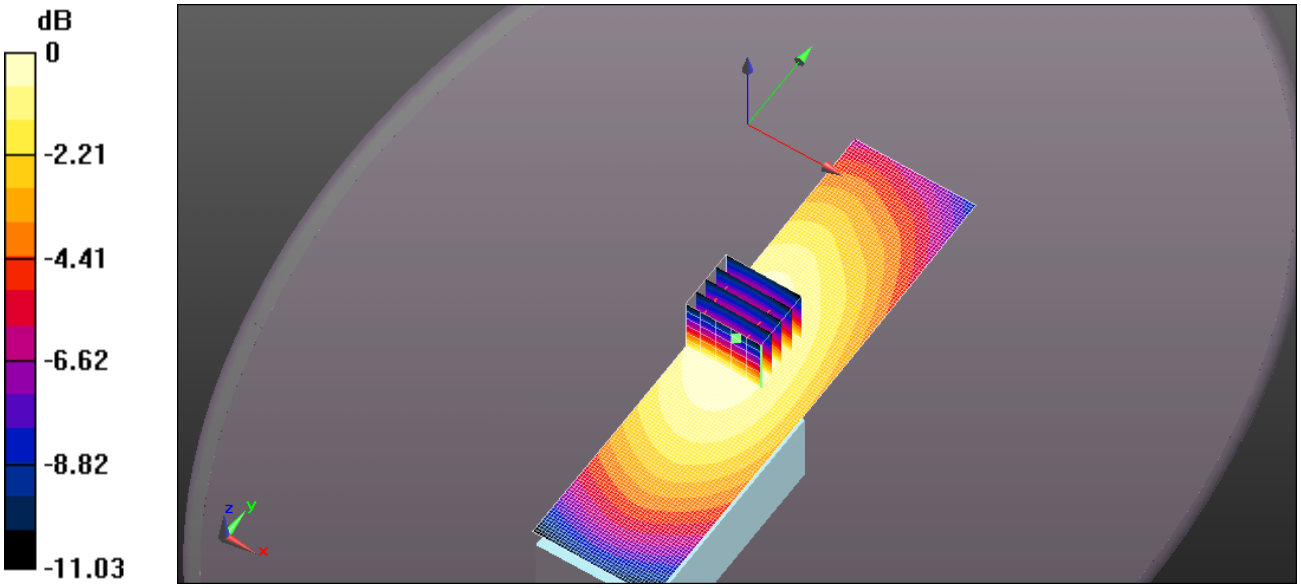

0 dB = 5.30 W/kg = 7.24 dBW/kg

Test Laboratory: Ultratech Group of Labs

FILE NAME: BP-280 SC57U 140MM 457MHZ.DA52:0

DUT: DUT Sample Brick w. Antenna; Type: Sample; Serial: 00000220-0
Program Name: System Performance Check at 450 MHz

Communication System: UID 10000, CW; Frequency: 457 MHz;Duty Cycle: 1:1
Medium parameters used (interpolated): f = 457 MHz; σ = 0.882 S/m; ε_r = 44.003; ρ = 1000 kg/m^3
Phantom section: Flat Section

DASY4 Configuration:
- Probe: EX3DV4 - SN3673; ConvF(10.35, 10.35, 10.35); Calibrated: 10/17/2014;
- Sensor-Surface: 1.4mm (Mechanical Surface Detection)
- Electronics: DAE4 Sn874; Calibrated: 3/24/2014
- Phantom: ELI 4.0; Type: QD OVA 001 BB; Serial: 1057
- ; SEMCAD X Version 14.6.10 (7331)

ICOM IC-F2000D 400-470 MHz Body/Head Frontal, d=25mm, Pin=4W (EX-Probe)/Area Scan (41x161x1): Interpolated grid: dx=1.500 mm, dy=1.500 mm

Info: Interpolated medium parameters used for SAR evaluation.
Maximum value of SAR (interpolated) = 3.48 W/kg

ICOM IC-F2000D 400-470 MHz Body/Head Frontal, d=25mm, Pin=4W (EX-Probe)/Zoom Scan (5x5x7) (6x5x7)/Cube 0: Measurement grid: dx=7.5mm, dy=7.5mm, dz=5mm
Reference Value = 63.43 V/m; Power Drift = -0.21 dB
Peak SAR (extrapolated) = 3.88 W/kg
SAR(1 g) = 2.75 W/kg; SAR(10 g) = 2.03 W/kg (SAR corrected for target medium)

Info: Interpolated medium parameters used for SAR evaluation.
Maximum value of SAR (measured) = 3.46 W/kg

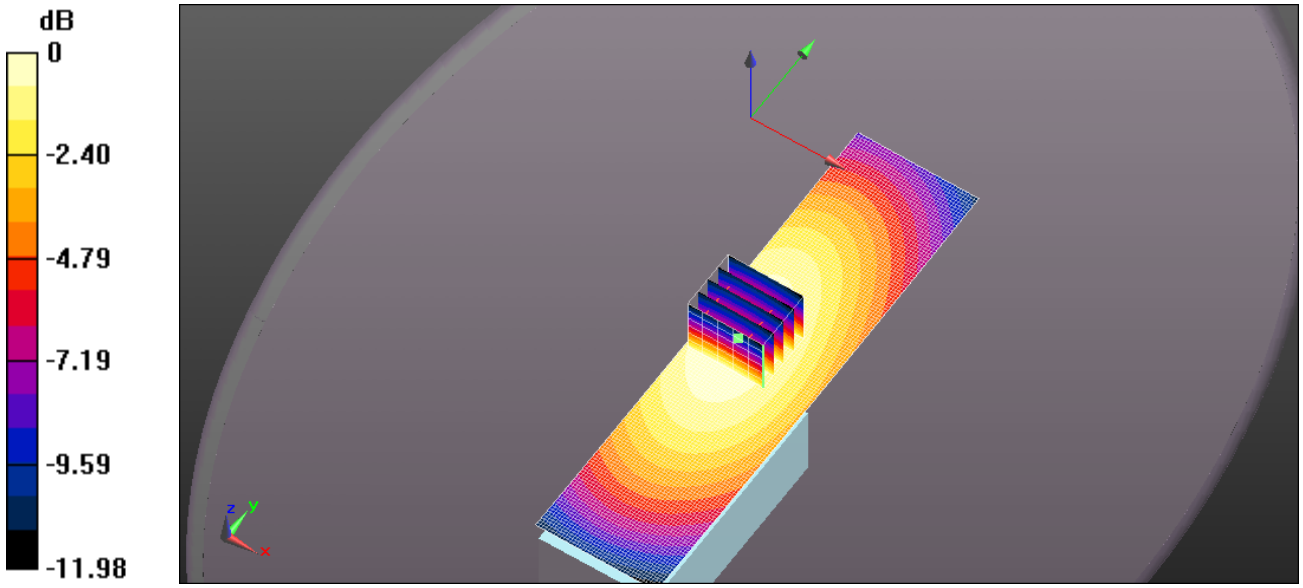

0 dB = 3.48 W/kg = 5.41 dBW/kg

Test Laboratory: Ultratech Group of Labs

FILE NAME: BP-280 SC73US 60MM 460MHZ.DA52:0

DUT: DUT Sample Brick w. Antenna; Type: Sample; Serial: 00000220-0
Program Name: System Performance Check at 450 MHz

Communication System: UID 10000, CW; Frequency: 457 MHz;Duty Cycle: 1:1
Medium parameters used (interpolated): f = 457 MHz; σ = 0.882 S/m; ε_r = 44.003; ρ = 1000 kg/m^3
Phantom section: Flat Section

DASY4 Configuration:
- Probe: EX3DV4 - SN3673; ConvF(10.35, 10.35, 10.35); Calibrated: 10/17/2014;
- Sensor-Surface: 1.4mm (Mechanical Surface Detection)
- Electronics: DAE4 Sn874; Calibrated: 3/24/2014
- Phantom: ELI 4.0; Type: QD OVA 001 BB; Serial: 1057
- ; SEMCAD X Version 14.6.10 (7331)

ICOM IC-F2000D 400-470 MHz Body/Head Frontal, d=25mm, Pin=4W (EX-Probe)/Area Scan (41x121x1): Interpolated grid: dx=1.500 mm, dy=1.500 mm

Info: Interpolated medium parameters used for SAR evaluation.
Maximum value of SAR (interpolated) = 3.47 W/kg

ICOM IC-F2000D 400-470 MHz Body/Head Frontal, d=25mm, Pin=4W (EX-Probe)/Zoom Scan (5x5x7) (6x5x7)/Cube 0: Measurement grid: dx=7.5mm, dy=7.5mm, dz=5mm
Reference Value = 65.00 V/m; Power Drift = -0.17 dB
Peak SAR (extrapolated) = 3.83 W/kg
SAR(1 g) = 2.74 W/kg; SAR(10 g) = 2.02 W/kg (SAR corrected for target medium)

Info: Interpolated medium parameters used for SAR evaluation.
Maximum value of SAR (measured) = 3.43 W/kg

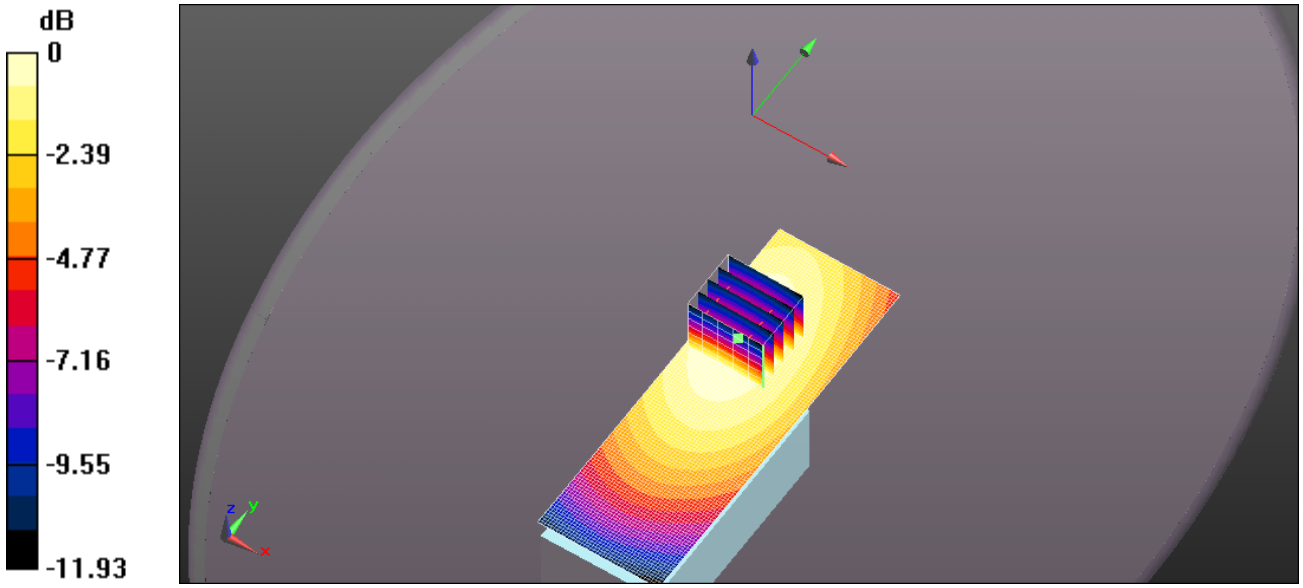

0 dB = 3.47 W/kg = 5.40 dBW/kg

Test Laboratory: Ultratech Group of Labs

FILE NAME: BP-280 SC26US 60MM 450MHZ.DA52:0

DUT: DUT Sample Brick w. Antenna; Type: Sample; Serial: 00000220-0
Program Name: System Performance Check at 450 MHz

Communication System: UID 10000, CW; Frequency: 450 MHz;Duty Cycle: 1:1
Medium parameters used: f = 450 MHz; σ = 0.876 S/m; ε_r = 44.233; ρ = 1000 kg/m^3
Phantom section: Flat Section

DASY4 Configuration:
- Probe: EX3DV4 - SN3673; ConvF(10.35, 10.35, 10.35); Calibrated: 10/17/2014;
- Sensor-Surface: 1.4mm (Mechanical Surface Detection)
- Electronics: DAE4 Sn874; Calibrated: 3/24/2014
- Phantom: ELI 4.0; Type: QD OVA 001 BB; Serial: 1057
- ; SEMCAD X Version 14.6.10 (7331)

ICOM IC-F2000D 400-470 MHz Body/Head Frontal, d=25mm, Pin=4W (EX-Probe)/Area Scan (41x121x1): Interpolated grid: dx=1.500 mm, dy=1.500 mm
Maximum value of SAR (interpolated) = 2.12 W/kg

ICOM IC-F2000D 400-470 MHz Body/Head Frontal, d=25mm, Pin=4W (EX-Probe)/Zoom Scan (5x5x7) (6x5x7)/Cube 0: Measurement grid: dx=7.5mm, dy=7.5mm, dz=5mm
Reference Value = 53.50 V/m; Power Drift = -0.18 dB
Peak SAR (extrapolated) = 2.09 W/kg
SAR(1 g) = 1.48 W/kg; SAR(10 g) = 1.09 W/kg (SAR corrected for target medium)
Maximum value of SAR (measured) = 1.87 W/kg

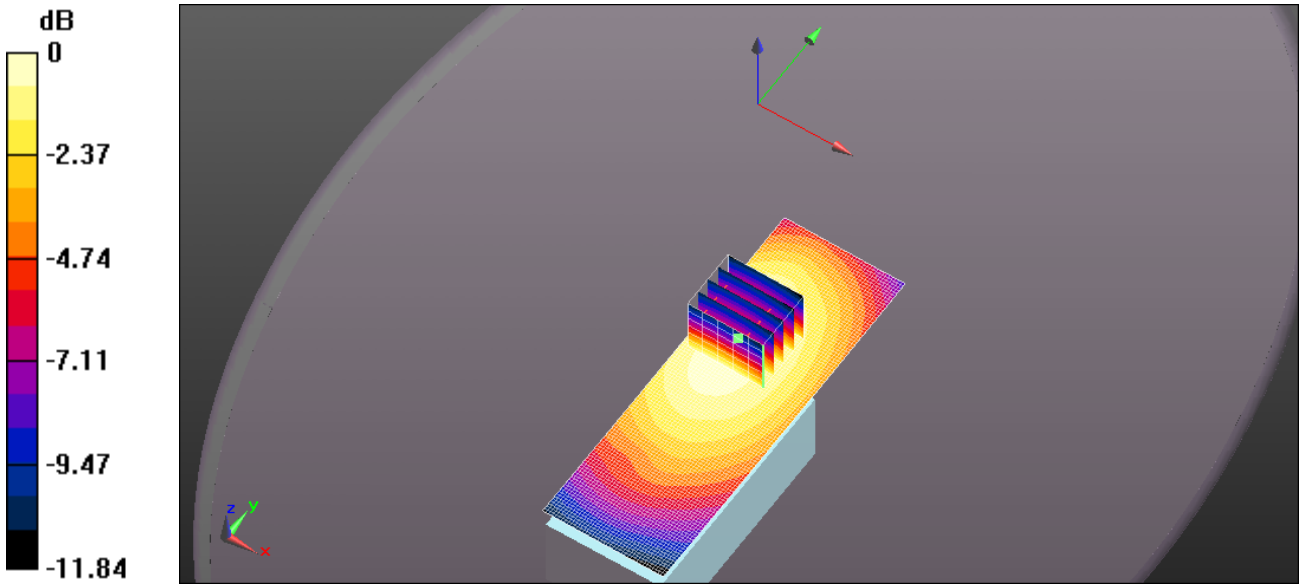

0 dB = 2.12 W/kg = 3.27 dBW/kg

Test Laboratory: Ultratech Group of Labs

FILE NAME: BP-278 SC01U 84MM 400MHZ.DA52:0

DUT: DUT Sample Brick w. Antenna; Type: Sample; Serial: 00000220-0
Program Name: System Performance Check at 450 MHz

Communication System: UID 10000, CW; Frequency: 400 MHz;Duty Cycle: 1:1
Medium parameters used: f = 400 MHz; σ = 0.827 S/m; ε_r = 45.27; ρ = 1000 kg/m^3
Phantom section: Flat Section

DASY4 Configuration:
- Probe: EX3DV4 - SN3673; ConvF(10.35, 10.35, 10.35); Calibrated: 10/17/2014;
- Sensor-Surface: 1.4mm (Mechanical Surface Detection)
- Electronics: DAE4 Sn874; Calibrated: 3/24/2014
- Phantom: ELI 4.0; Type: QD OVA 001 BB; Serial: 1057
- ; SEMCAD X Version 14.6.10 (7331)

ICOM IC-F2000D 400-470 MHz Body/Head Frontal, d=25mm, Pin=4W (EX-Probe)/Area Scan (41x181x1): Interpolated grid: dx=1.500 mm, dy=1.500 mm
Maximum value of SAR (interpolated) = 0.827 W/kg

ICOM IC-F2000D 400-470 MHz Body/Head Frontal, d=25mm, Pin=4W (EX-Probe)/Zoom Scan (5x5x7) (6x5x7)/Cube 0: Measurement grid: dx=7.5mm, dy=7.5mm, dz=5mm
Reference Value = 33.88 V/m; Power Drift = -0.17 dB
Peak SAR (extrapolated) = 0.928 W/kg
SAR(1 g) = 0.651 W/kg; SAR(10 g) = 0.484 W/kg (SAR corrected for target medium)
Maximum value of SAR (measured) = 0.817 W/kg

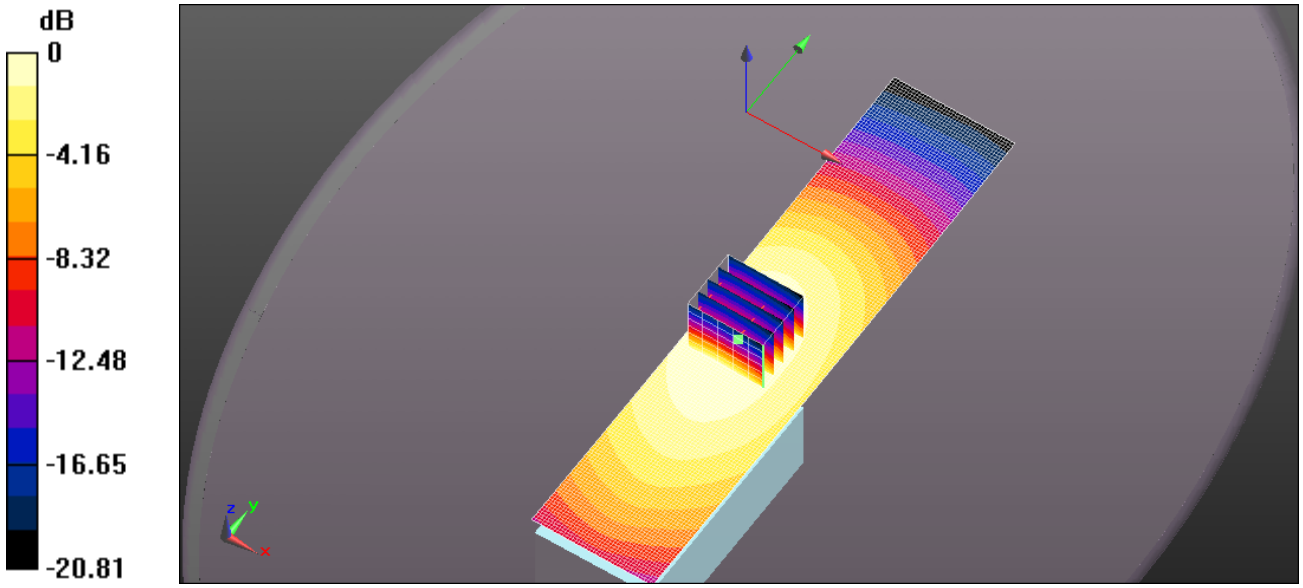

0 dB = 0.827 W/kg = -0.83 dBW/kg

Test Laboratory: Ultratech Group of Labs

FILE NAME: BP-278 SC02U 84MM 400MHZ.DA52:0

DUT: DUT Sample Brick w. Antenna; Type: Sample; Serial: 00000220-0
Program Name: System Performance Check at 450 MHz

Communication System: UID 10000, CW; Frequency: 400 MHz;Duty Cycle: 1:1
Medium parameters used: f = 400 MHz; σ = 0.827 S/m; ε_r = 45.27; ρ = 1000 kg/m^3
Phantom section: Flat Section

DASY4 Configuration:
- Probe: EX3DV4 - SN3673; ConvF(10.35, 10.35, 10.35); Calibrated: 10/17/2014;
- Sensor-Surface: 1.4mm (Mechanical Surface Detection)
- Electronics: DAE4 Sn874; Calibrated: 3/24/2014
- Phantom: ELI 4.0; Type: QD OVA 001 BB; Serial: 1057
- ; SEMCAD X Version 14.6.10 (7331)

ICOM IC-F2000D 400-470 MHz Body/Head Frontal, d=25mm, Pin=4W (EX-Probe)/Area Scan (41x181x1): Interpolated grid: dx=1.500 mm, dy=1.500 mm
Maximum value of SAR (interpolated) = 0.347 W/kg

ICOM IC-F2000D 400-470 MHz Body/Head Frontal, d=25mm, Pin=4W (EX-Probe)/Zoom Scan (5x5x7) (6x5x7)/Cube 0: Measurement grid: dx=7.5mm, dy=7.5mm, dz=5mm
Reference Value = 20.11 V/m; Power Drift = -0.12 dB
Peak SAR (extrapolated) = 0.389 W/kg
SAR(1 g) = 0.277 W/kg; SAR(10 g) = 0.206 W/kg (SAR corrected for target medium)
Maximum value of SAR (measured) = 0.347 W/kg

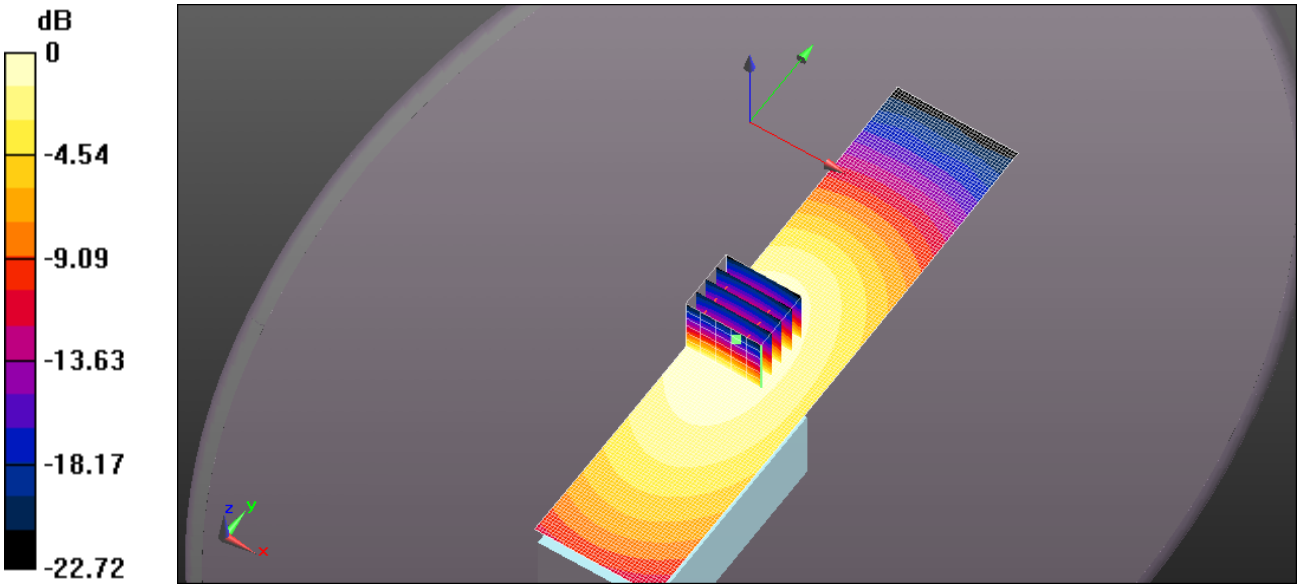

0 dB = 0.347 W/kg = -4.60 dBW/kg

Test Laboratory: Ultratech Group of Labs

FILE NAME: BP-279 SC25U 158MM 420MHZ.DA52:0

DUT: DUT Sample Brick w. Antenna; Type: Sample; Serial: 00000220-0
Program Name: System Performance Check at 450 MHz

Communication System: UID 10000, CW; Frequency: 420 MHz;Duty Cycle: 1:1
Medium parameters used: f = 420 MHz; σ = 0.851 S/m; ε_r = 44.953; ρ = 1000 kg/m^3
Phantom section: Flat Section

DASY4 Configuration:
- Probe: EX3DV4 - SN3673; ConvF(10.35, 10.35, 10.35); Calibrated: 10/17/2014;
- Sensor-Surface: 1.4mm (Mechanical Surface Detection)
- Electronics: DAE4 Sn874; Calibrated: 3/24/2014
- Phantom: ELI 4.0; Type: QD OVA 001 BB; Serial: 1057
- ; SEMCAD X Version 14.6.10 (7331)

ICOM IC-F2000D 400-470 MHz Body/Head Frontal, d=25mm, Pin=4W (EX-Probe)/Area Scan (41x181x1): Interpolated grid: dx=1.500 mm, dy=1.500 mm
Maximum value of SAR (interpolated) = 5.09 W/kg

ICOM IC-F2000D 400-470 MHz Body/Head Frontal, d=25mm, Pin=4W (EX-Probe)/Zoom Scan (5x5x7) (6x5x7)/Cube 0: Measurement grid: dx=7.5mm, dy=7.5mm, dz=5mm
Reference Value = 79.56 V/m; Power Drift = -0.19 dB
Peak SAR (extrapolated) = 5.62 W/kg
SAR(1 g) = 4.05 W/kg; SAR(10 g) = 3.03 W/kg (SAR corrected for target medium)
Maximum value of SAR (measured) = 5.04 W/kg

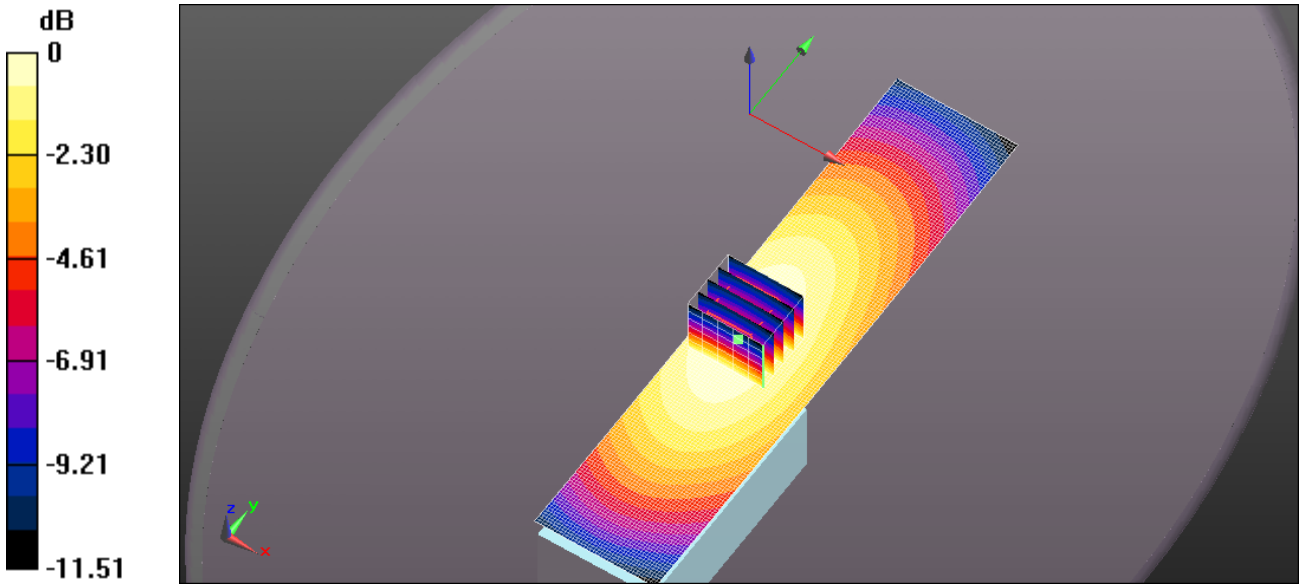

0 dB = 5.09 W/kg = 7.07 dBW/kg

Test Laboratory: Ultratech Group of Labs

FILE NAME: BP-278 SC25U 158MM 420MHZ.DA52:0

DUT: DUT Sample Brick w. Antenna; Type: Sample; Serial: 00000220-0
Program Name: System Performance Check at 450 MHz

Communication System: UID 10000, CW; Frequency: 420 MHz;Duty Cycle: 1:1
Medium parameters used: f = 420 MHz; σ = 0.851 S/m; ε_r = 44.953; ρ = 1000 kg/m^3
Phantom section: Flat Section

DASY4 Configuration:
- Probe: EX3DV4 - SN3673; ConvF(10.35, 10.35, 10.35); Calibrated: 10/17/2014;
- Sensor-Surface: 1.4mm (Mechanical Surface Detection)
- Electronics: DAE4 Sn874; Calibrated: 3/24/2014
- Phantom: ELI 4.0; Type: QD OVA 001 BB; Serial: 1057
- ; SEMCAD X Version 14.6.10 (7331)

ICOM IC-F2000D 400-470 MHz Body/Head Frontal, d=25mm, Pin=4W (EX-Probe)/Area Scan (41x181x1): Interpolated grid: dx=1.500 mm, dy=1.500 mm
Maximum value of SAR (interpolated) = 5.00 W/kg

ICOM IC-F2000D 400-470 MHz Body/Head Frontal, d=25mm, Pin=4W (EX-Probe)/Zoom Scan (5x5x7) (6x5x7)/Cube 0: Measurement grid: dx=7.5mm, dy=7.5mm, dz=5mm
Reference Value = 79.11 V/m; Power Drift = -0.16 dB
Peak SAR (extrapolated) = 5.58 W/kg
SAR(1 g) = 3.99 W/kg; SAR(10 g) = 2.98 W/kg (SAR corrected for target medium)
Maximum value of SAR (measured) = 5.00 W/kg

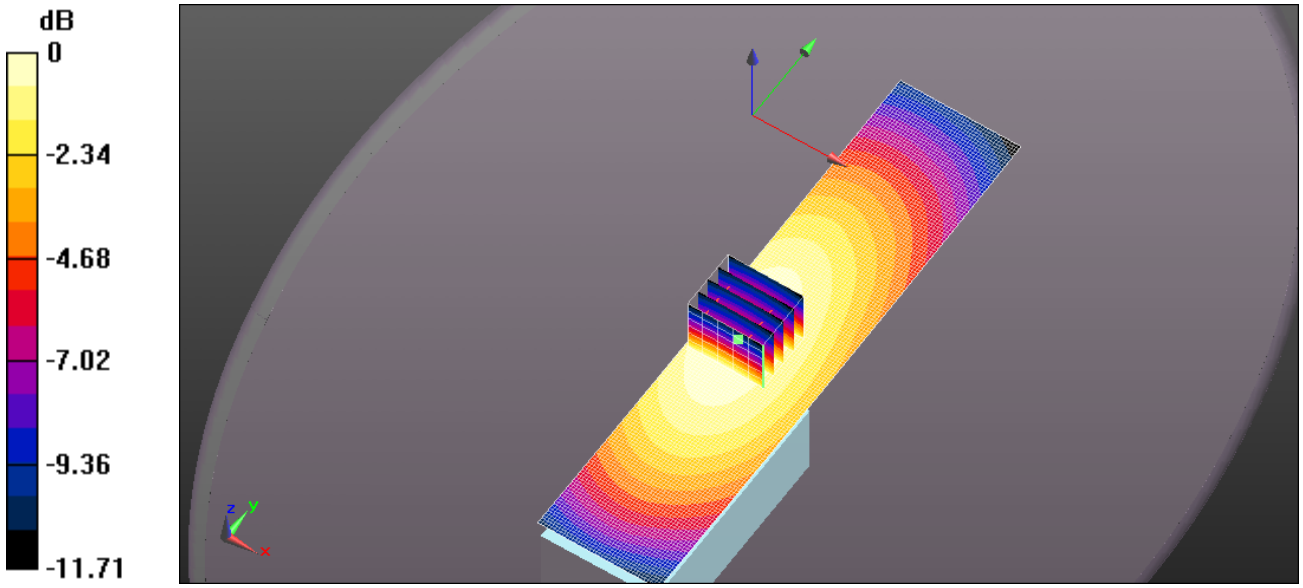

0 dB = 5.00 W/kg = 6.99 dBW/kg

EXHIBIT 2. HEAD SAR – CUT ANTENNA MEASUREMENT

Test Laboratory: Ultratech Group of Labs

FILE NAME: BP-280 SC61UC 165MM 400MHZ.DA52:0

DUT: DUT Sample Brick w. Antenna; Type: Sample; Serial: 00000220-0
Program Name: System Performance Check at 450 MHz

Communication System: UID 10000, CW; Frequency: 460 MHz;Duty Cycle: 1:1
Medium parameters used: f = 460 MHz; σ = 0.885 S/m; ε_r = 43.912; ρ = 1000 kg/m^3
Phantom section: Flat Section

DASY4 Configuration:
- Probe: EX3DV4 - SN3673; ConvF(10.35, 10.35, 10.35); Calibrated: 10/17/2014;
- Sensor-Surface: 1.4mm (Mechanical Surface Detection)
- Electronics: DAE4 Sn874; Calibrated: 3/24/2014
- Phantom: ELI 4.0; Type: QD OVA 001 BB; Serial: 1057
- ; SEMCAD X Version 14.6.10 (7331)

ICOM IC-F2000D 400-470 MHz Body/Head Frontal, d=25mm, Pin=4W (EX-Probe)/Area Scan (41x181x1): Interpolated grid: dx=1.500 mm, dy=1.500 mm
Maximum value of SAR (interpolated) = 3.83 W/kg

ICOM IC-F2000D 400-470 MHz Body/Head Frontal, d=25mm, Pin=4W (EX-Probe)/Zoom Scan (5x5x7) (6x5x7)/Cube 0: Measurement grid: dx=7.5mm, dy=7.5mm, dz=5mm
Reference Value = 64.97 V/m; Power Drift = -0.12 dB
Peak SAR (extrapolated) = 4.22 W/kg
SAR(1 g) = 3.04 W/kg; SAR(10 g) = 2.26 W/kg (SAR corrected for target medium)
Maximum value of SAR (measured) = 3.79 W/kg

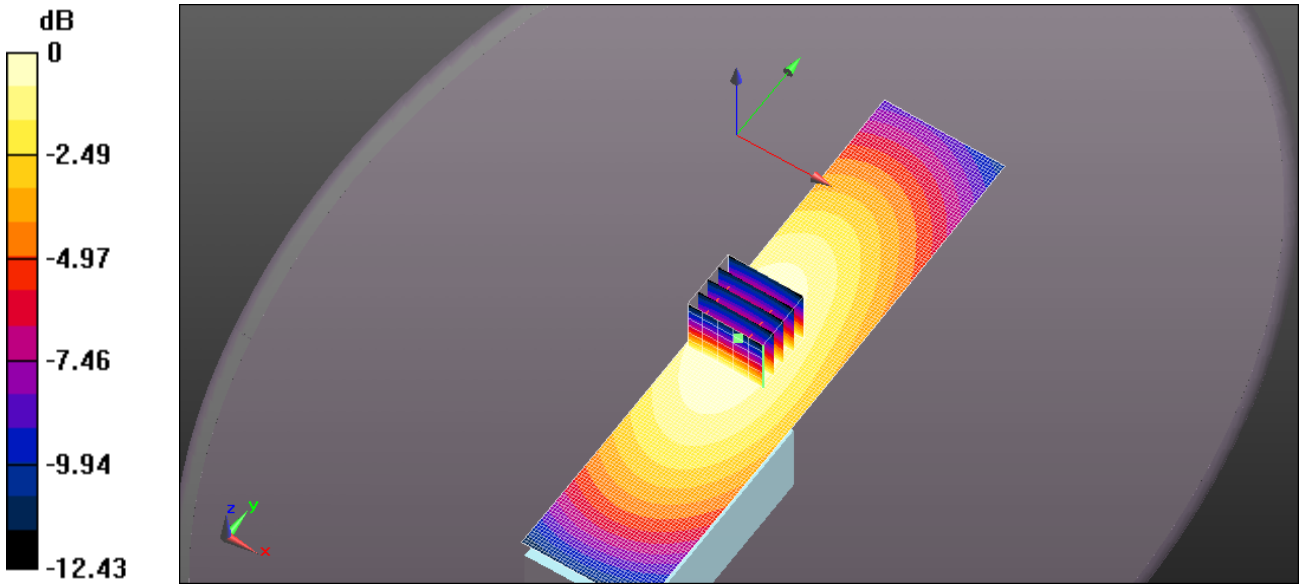

0 dB = 3.83 W/kg = 5.83 dBW/kg

Test Laboratory: Ultratech Group of Labs

FILE NAME: BP-280 SC61UC 156MM 420MHZ.DA52:0

DUT: DUT Sample Brick w. Antenna; Type: Sample; Serial: 00000220-0
Program Name: System Performance Check at 450 MHz

Communication System: UID 10000, CW; Frequency: 460 MHz;Duty Cycle: 1:1
Medium parameters used: f = 460 MHz; σ = 0.885 S/m; ε_r = 43.912; ρ = 1000 kg/m^3
Phantom section: Flat Section

DASY4 Configuration:
- Probe: EX3DV4 - SN3673; ConvF(10.35, 10.35, 10.35); Calibrated: 10/17/2014;
- Sensor-Surface: 1.4mm (Mechanical Surface Detection)
- Electronics: DAE4 Sn874; Calibrated: 3/24/2014
- Phantom: ELI 4.0; Type: QD OVA 001 BB; Serial: 1057
- ; SEMCAD X Version 14.6.10 (7331)

ICOM IC-F2000D 400-470 MHz Body/Head Frontal, d=25mm, Pin=4W (EX-Probe)/Area Scan (41x181x1): Interpolated grid: dx=1.500 mm, dy=1.500 mm
Maximum value of SAR (interpolated) = 4.36 W/kg

ICOM IC-F2000D 400-470 MHz Body/Head Frontal, d=25mm, Pin=4W (EX-Probe)/Zoom Scan (5x5x7) (6x5x7)/Cube 0: Measurement grid: dx=7.5mm, dy=7.5mm, dz=5mm
Reference Value = 70.32 V/m; Power Drift = -0.20 dB
Peak SAR (extrapolated) = 4.82 W/kg
SAR(1 g) = 3.42 W/kg; SAR(10 g) = 2.55 W/kg (SAR corrected for target medium)
Maximum value of SAR (measured) = 4.30 W/kg

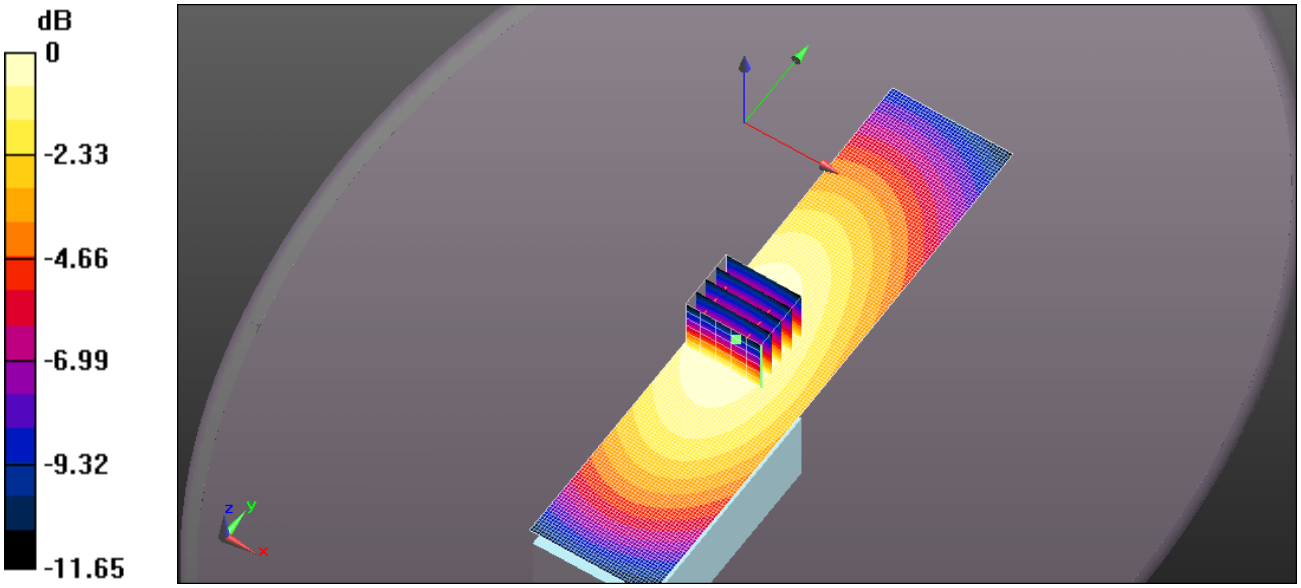

0 dB = 4.36 W/kg = 6.40 dBW/kg

Test Laboratory: Ultratech Group of Labs

FILE NAME: BP-280 SC61UC 142MM 460MHZ.DA52:0

DUT: DUT Sample Brick w. Antenna; Type: Sample; Serial: 00000220-0
Program Name: System Performance Check at 450 MHz

Communication System: UID 10000, CW; Frequency: 460 MHz;Duty Cycle: 1:1
Medium parameters used: f = 460 MHz; σ = 0.885 S/m; ε_r = 43.912; ρ = 1000 kg/m^3
Phantom section: Flat Section

DASY4 Configuration:
- Probe: EX3DV4 - SN3673; ConvF(10.35, 10.35, 10.35); Calibrated: 10/17/2014;
- Sensor-Surface: 1.4mm (Mechanical Surface Detection)
- Electronics: DAE4 Sn874; Calibrated: 3/24/2014
- Phantom: ELI 4.0; Type: QD OVA 001 BB; Serial: 1057
- ; SEMCAD X Version 14.6.10 (7331)

ICOM IC-F2000D 400-470 MHz Body/Head Frontal, d=25mm, Pin=4W (EX-Probe)/Area Scan (41x181x1): Interpolated grid: dx=1.500 mm, dy=1.500 mm
Maximum value of SAR (interpolated) = 4.14 W/kg

ICOM IC-F2000D 400-470 MHz Body/Head Frontal, d=25mm, Pin=4W (EX-Probe)/Zoom Scan (5x5x7) (6x5x7)/Cube 0: Measurement grid: dx=7.5mm, dy=7.5mm, dz=5mm
Reference Value = 67.39 V/m; Power Drift = -0.14 dB
Peak SAR (extrapolated) = 4.59 W/kg
SAR(1 g) = 3.27 W/kg; SAR(10 g) = 2.42 W/kg (SAR corrected for target medium)
Maximum value of SAR (measured) = 4.10 W/kg

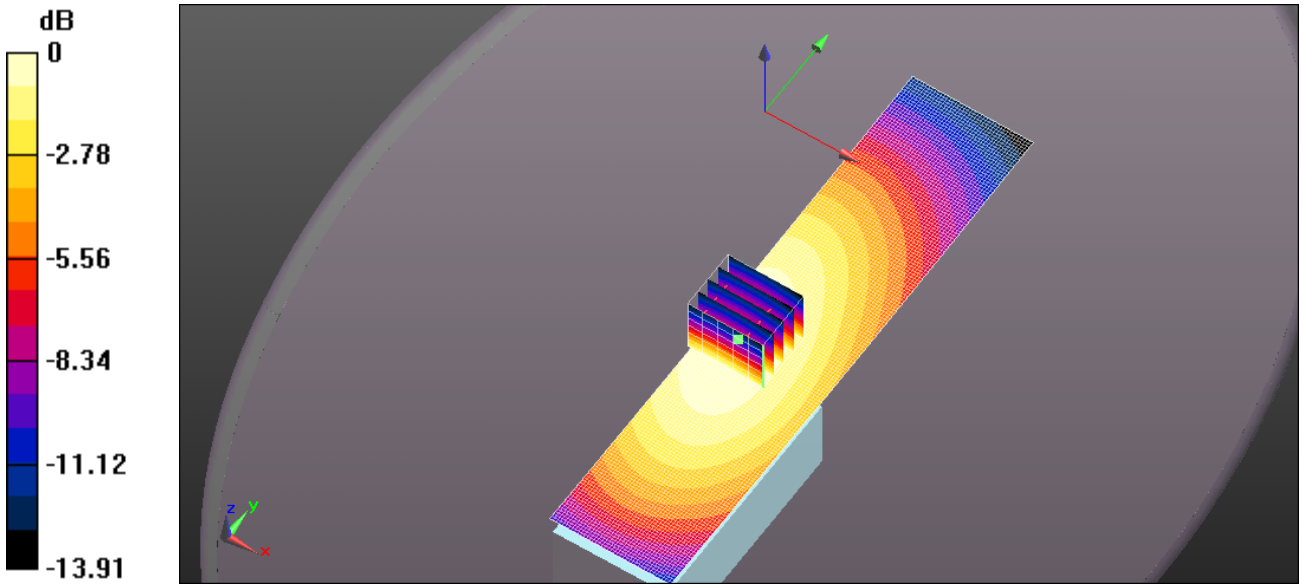

0 dB = 4.14 W/kg = 6.17 dBW/kg

Test Laboratory: Ultratech Group of Labs

FILE NAME: BP-280 SC61UC 148MM 460MHZ.DA52:0

DUT: DUT Sample Brick w. Antenna; Type: Sample; Serial: 00000220-0
Program Name: System Performance Check at 450 MHz

Communication System: UID 10000, CW; Frequency: 460 MHz;Duty Cycle: 1:1
Medium parameters used: f = 460 MHz; σ = 0.885 S/m; ε_r = 43.912; ρ = 1000 kg/m^3
Phantom section: Flat Section

DASY4 Configuration:
- Probe: EX3DV4 - SN3673; ConvF(10.35, 10.35, 10.35); Calibrated: 10/17/2014;
- Sensor-Surface: 1.4mm (Mechanical Surface Detection)
- Electronics: DAE4 Sn874; Calibrated: 3/24/2014
- Phantom: ELI 4.0; Type: QD OVA 001 BB; Serial: 1057
- ; SEMCAD X Version 14.6.10 (7331)

ICOM IC-F2000D 400-470 MHz Body/Head Frontal, d=25mm, Pin=4W (EX-Probe)/Area Scan (41x181x1): Interpolated grid: dx=1.500 mm, dy=1.500 mm
Maximum value of SAR (interpolated) = 4.56 W/kg

ICOM IC-F2000D 400-470 MHz Body/Head Frontal, d=25mm, Pin=4W (EX-Probe)/Zoom Scan (5x5x7) (6x5x7)/Cube 0: Measurement grid: dx=7.5mm, dy=7.5mm, dz=5mm
Reference Value = 72.00 V/m; Power Drift = -0.21 dB
Peak SAR (extrapolated) = 5.08 W/kg
SAR(1 g) = 3.6 W/kg; SAR(10 g) = 2.67 W/kg (SAR corrected for target medium)
Maximum value of SAR (measured) = 4.53 W/kg

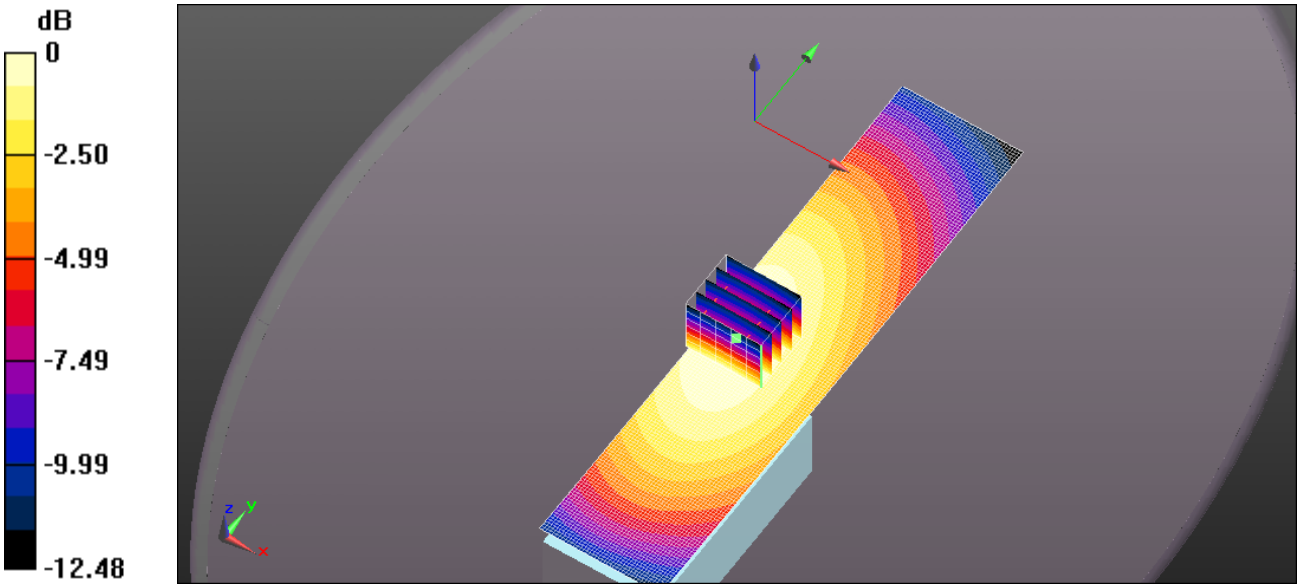

0 dB = 4.56 W/kg = 6.59 dBW/kg

Test Laboratory: Ultratech Group of Labs

FILE NAME: BP-279 SC61UC 148MM 460MHZ.DA52:0

DUT: DUT Sample Brick w. Antenna; Type: Sample; Serial: 00000220-0
Program Name: System Performance Check at 450 MHz

Communication System: UID 10000, CW; Frequency: 460 MHz;Duty Cycle: 1:1
Medium parameters used: f = 460 MHz; σ = 0.885 S/m; ε_r = 43.912; ρ = 1000 kg/m^3
Phantom section: Flat Section

DASY4 Configuration:
- Probe: EX3DV4 - SN3673; ConvF(10.35, 10.35, 10.35); Calibrated: 10/17/2014;
- Sensor-Surface: 1.4mm (Mechanical Surface Detection)
- Electronics: DAE4 Sn874; Calibrated: 3/24/2014
- Phantom: ELI 4.0; Type: QD OVA 001 BB; Serial: 1057
- ; SEMCAD X Version 14.6.10 (7331)

ICOM IC-F2000D 400-470 MHz Body/Head Frontal, d=25mm, Pin=4W (EX-Probe)/Area Scan (41x181x1): Interpolated grid: dx=1.500 mm, dy=1.500 mm
Maximum value of SAR (interpolated) = 4.83 W/kg

ICOM IC-F2000D 400-470 MHz Body/Head Frontal, d=25mm, Pin=4W (EX-Probe)/Zoom Scan (5x5x7) (6x5x7)/Cube 0: Measurement grid: dx=7.5mm, dy=7.5mm, dz=5mm
Reference Value = 74.93 V/m; Power Drift = -0.18 dB
Peak SAR (extrapolated) = 5.37 W/kg
SAR(1 g) = 3.82 W/kg; SAR(10 g) = 2.83 W/kg (SAR corrected for target medium)
Maximum value of SAR (measured) = 4.80 W/kg

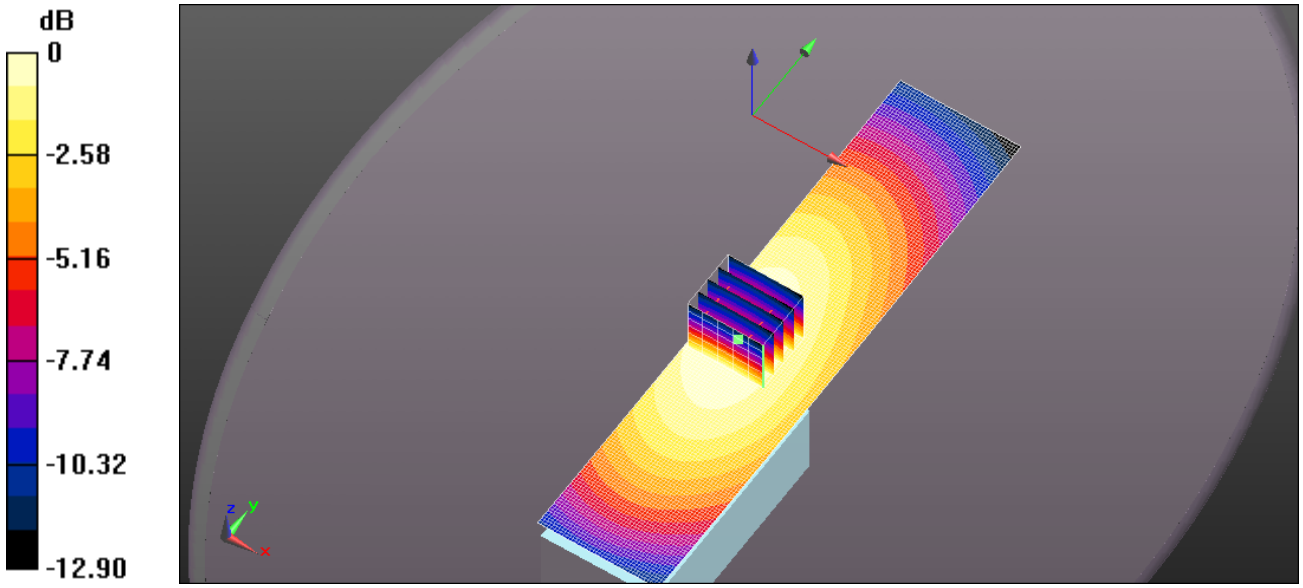

0 dB = 4.83 W/kg = 6.84 dBW/kg

Test Laboratory: Ultratech Group of Labs

FILE NAME: BP-278 SC61UC 148MM 460MHZ.DA52:0

DUT: DUT Sample Brick w. Antenna; Type: Sample; Serial: 00000220-0
Program Name: System Performance Check at 450 MHz

Communication System: UID 10000, CW; Frequency: 460 MHz;Duty Cycle: 1:1
Medium parameters used: f = 460 MHz; σ = 0.885 S/m; ε_r = 43.912; ρ = 1000 kg/m^3
Phantom section: Flat Section

DASY4 Configuration:
- Probe: EX3DV4 - SN3673; ConvF(10.35, 10.35, 10.35); Calibrated: 10/17/2014;
- Sensor-Surface: 1.4mm (Mechanical Surface Detection)
- Electronics: DAE4 Sn874; Calibrated: 3/24/2014
- Phantom: ELI 4.0; Type: QD OVA 001 BB; Serial: 1057
- ; SEMCAD X Version 14.6.10 (7331)

ICOM IC-F2000D 400-470 MHz Body/Head Frontal, d=25mm, Pin=4W (EX-Probe)/Area Scan (41x181x1): Interpolated grid: dx=1.500 mm, dy=1.500 mm
Maximum value of SAR (interpolated) = 4.92 W/kg

ICOM IC-F2000D 400-470 MHz Body/Head Frontal, d=25mm, Pin=4W (EX-Probe)/Zoom Scan (5x5x7) (6x5x7)/Cube 0: Measurement grid: dx=7.5mm, dy=7.5mm, dz=5mm
Reference Value = 79.97 V/m; Power Drift = -0.12 dB
Peak SAR (extrapolated) = 5.43 W/kg
SAR(1 g) = 3.85 W/kg; SAR(10 g) = 2.85 W/kg (SAR corrected for target medium)
Maximum value of SAR (measured) = 4.84 W/kg

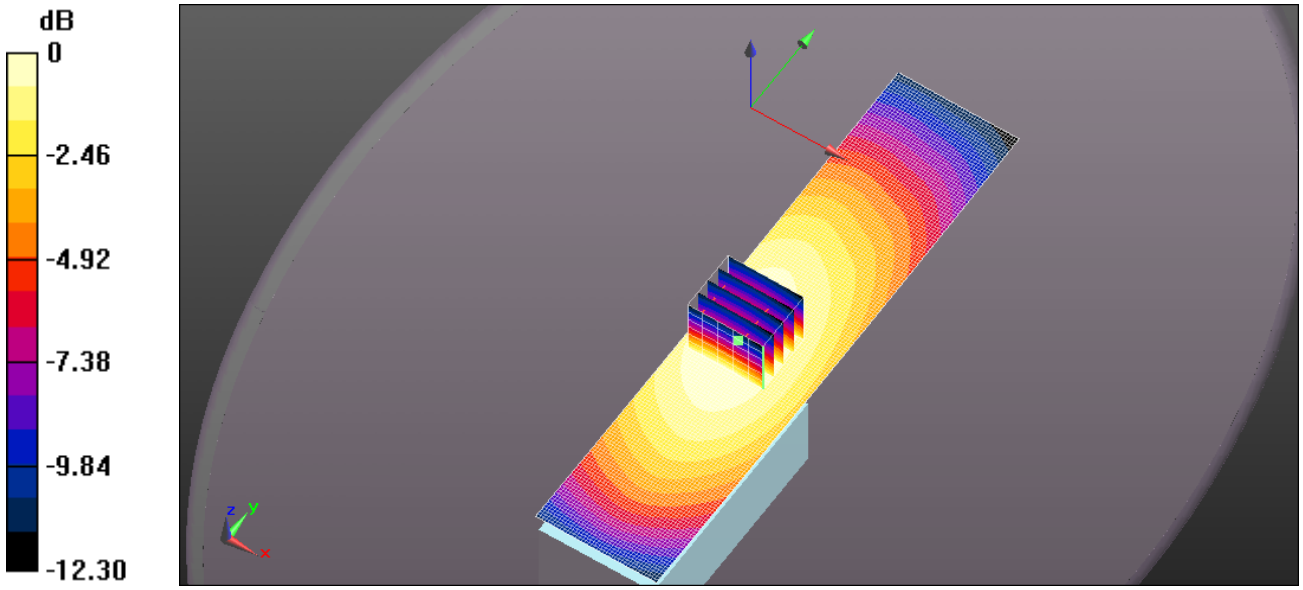

0 dB = 4.92 W/kg = 6.92 dBW/kg

Test Laboratory: Ultratech Group of Labs

FILE NAME: BP-278 SC61UC 142MM 460MHZ.DA52:0

DUT: DUT Sample Brick w. Antenna; Type: Sample; Serial: 00000220-0
Program Name: System Performance Check at 450 MHz

Communication System: UID 10000, CW; Frequency: 460 MHz;Duty Cycle: 1:1
Medium parameters used: f = 460 MHz; σ = 0.885 S/m; ε_r = 43.912; ρ = 1000 kg/m^3
Phantom section: Flat Section

DASY4 Configuration:
- Probe: EX3DV4 - SN3673; ConvF(10.35, 10.35, 10.35); Calibrated: 10/17/2014;
- Sensor-Surface: 1.4mm (Mechanical Surface Detection)
- Electronics: DAE4 Sn874; Calibrated: 3/24/2014
- Phantom: ELI 4.0; Type: QD OVA 001 BB; Serial: 1057
- ; SEMCAD X Version 14.6.10 (7331)

ICOM IC-F2000D 400-470 MHz Body/Head Frontal, d=25mm, Pin=4W (EX-Probe)/Area Scan (41x181x1): Interpolated grid: dx=1.500 mm, dy=1.500 mm
Maximum value of SAR (interpolated) = 4.17 W/kg

ICOM IC-F2000D 400-470 MHz Body/Head Frontal, d=25mm, Pin=4W (EX-Probe)/Zoom Scan (5x5x7) (6x5x7)/Cube 0: Measurement grid: dx=7.5mm, dy=7.5mm, dz=5mm
Reference Value = 71.35 V/m; Power Drift = -0.09 dB
Peak SAR (extrapolated) = 4.67 W/kg
SAR(1 g) = 3.32 W/kg; SAR(10 g) = 2.46 W/kg (SAR corrected for target medium)
Maximum value of SAR (measured) = 4.17 W/kg

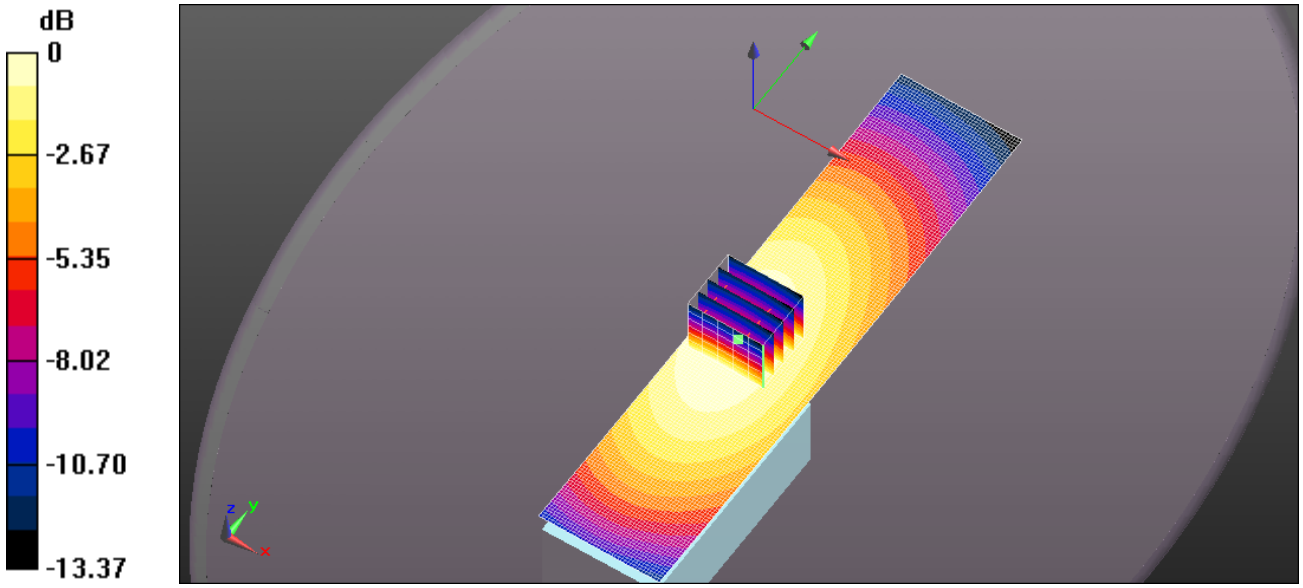

0 dB = 4.17 W/kg = 6.21 dBW/kg

EXHIBIT 3. BODY SAR MEASUREMENT SUMMARY

Antenna	Power (W)	CH	CH. Freq (MHz)	BODY SAR 1g (W/Kg) BP-278 1300mAh	BP-279 1485mAh	BP-280 2280mAh
FA-SC25U 400-430 MHz Green Tip 158mm	3.70	1	400			4.74
	3.72	2	410		6.07	6.42
	3.77	4	420	6.73	7.16	7.50
	3.73	7	430	6.99	7.7	7.43
FA-SC57U 430-470 MHz Red Tip 140mm	3.73	7	430			
	3.78	11	443.33			
	3.91	13	456.66			5.56
	3.81	15	470			
FA-SC73US 450-490 MHz Red Tip 60mm	3.83	12	450			
	3.84	14	460		5.89	6.01
	3.81	15	470			
FA-SC26US 400-450 MHz Green Tip 60mm	3.70	1	400			
	3.76	3	412.5			
	3.76	6	425			
	3.73	9	437.5			
	3.83	12	450			2.52
FA-SC01U 350-400 MHz Red Tip 84mm	3.70	1	400			0.77
FA-SC02U 330-380 MHz Blue Tip 84mm	3.70	1	400			0.37

Antenna	Power (W)	CH	CH. Freq (MHz)	BODY SAR 1g (W/Kg) BP-278 1300mAh	BP-279 1485mAh	BP-280 2280mAh
Cut Antenna 380-520MHz						
FA-SC61UC 400MHz White Tip 165 mm	3.7	1	400			
	3.77	5	420			
	3.80	10	440			
	3.84	14	460			4.03
	3.81	15	470			
FA-SC61UC 420MHz White Tip 156mm	3.7	1	400			
	3.77	5	420			
	3.80	10	440			
	3.84	14	460			6.21
	3.81	15	470			
FA-SC61UC 440MHz White Tip 148mm	3.7	1	400			3.34
	3.77	5	420			1.78
	3.80	10	440		6.98	6.37
	3.84	14	460	7.44	7.9	7.75
	3.81	15	470		5.7	7.39
FA-SC61UC 460MHz White Tip 142mm	3.7	1	400			2.86
	3.77	5	420			4.43
	3.80	10	440		5.27	5.66
	3.84	14	460	6.06	7.26	7.91
	3.81	15	470		5.76	7.23

Test Laboratory: Ultratech Group of Labs

FILE NAME: BP-280 SC25U 158MM 420MHZ.DA52:0

DUT: DUT Sample Brick w. Antenna; Type: Sample; Serial: 00000220-0
Program Name: System Performance Check at 450 MHz

Communication System: UID 10000, CW; Frequency: 420 MHz;Duty Cycle: 1:1
Medium parameters used: f = 420 MHz; σ = 0.874 S/m; ε_r = 56.348; ρ = 1000 kg/m^3
Phantom section: Flat Section

DASY4 Configuration:
- Probe: EX3DV4 - SN3673; ConvF(9.11, 9.11, 9.11); Calibrated: 10/17/2014;
- Sensor-Surface: 1.4mm (Mechanical Surface Detection)
- Electronics: DAE4 Sn874; Calibrated: 3/24/2014
- Phantom: ELI 4.0; Type: QD OVA 001 BB; Serial: 1057
- ; SEMCAD X Version 14.6.10 (7331)

ICOM IC-F2000D 400-470 MHz Body/Body - Belt Clip Touching, d=0mm, Pin=4W (ES-Probe)/Area Scan (51x161x1): Interpolated grid: dx=1.500 mm, dy=1.500 mm
Maximum value of SAR (interpolated) = 9.98 W/kg

ICOM IC-F2000D 400-470 MHz Body/Body - Belt Clip Touching, d=0mm, Pin=4W (ES-Probe)/Zoom Scan (5x5x7) (6x5x7)/Cube 0: Measurement grid: dx=7.5mm, dy=7.5mm, dz=5mm
Reference Value = 100.2 V/m; Power Drift = -0.12 dB
Peak SAR (extrapolated) = 10.9 W/kg
SAR(1 g) = 7.5 W/kg; SAR(10 g) = 5.51 W/kg (SAR corrected for target medium)
Maximum value of SAR (measured) = 9.59 W/kg

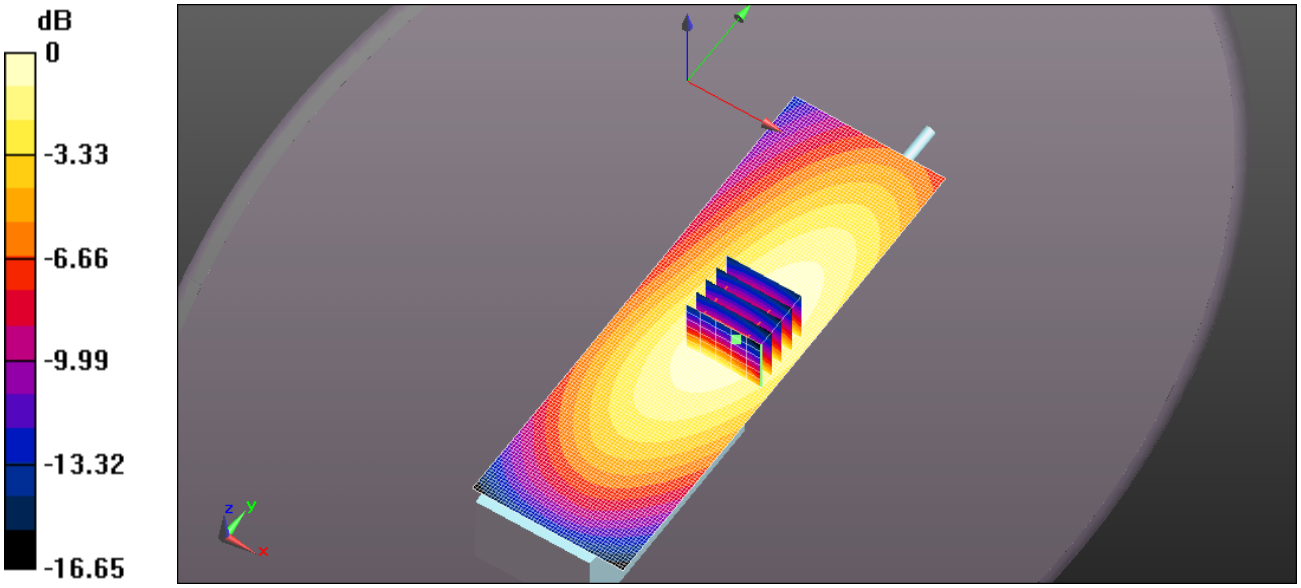

0 dB = 9.98 W/kg = 9.99 dBW/kg

Test Laboratory: Ultratech Group of Labs

FILE NAME: BP-280 SC25U 158MM 430MHZ.DA52:0

DUT: DUT Sample Brick w. Antenna; Type: Sample; Serial: 00000220-0
Program Name: System Performance Check at 450 MHz

Communication System: UID 10000, CW; Frequency: 430 MHz;Duty Cycle: 1:1
Medium parameters used: f = 430 MHz; σ = 0.884 S/m; ε_r = 56.116; ρ = 1000 kg/m^3
Phantom section: Flat Section

DASY4 Configuration:
- Probe: EX3DV4 - SN3673; ConvF(9.11, 9.11, 9.11); Calibrated: 10/17/2014;
- Sensor-Surface: 1.4mm (Mechanical Surface Detection)
- Electronics: DAE4 Sn874; Calibrated: 3/24/2014
- Phantom: ELI 4.0; Type: QD OVA 001 BB; Serial: 1057
- ; SEMCAD X Version 14.6.10 (7331)

ICOM IC-F2000D 400-470 MHz Body/Body - Belt Clip Touching, d=0mm, Pin=4W (ES-Probe)/Area Scan (51x161x1): Interpolated grid: dx=1.500 mm, dy=1.500 mm
Maximum value of SAR (interpolated) = 9.75 W/kg

ICOM IC-F2000D 400-470 MHz Body/Body - Belt Clip Touching, d=0mm, Pin=4W (ES-Probe)/Zoom Scan (5x5x7) (6x5x7)/Cube 0: Measurement grid: dx=7.5mm, dy=7.5mm, dz=5mm
Reference Value = 94.76 V/m; Power Drift = -0.18 dB
Peak SAR (extrapolated) = 10.7 W/kg
SAR(1 g) = 7.43 W/kg; SAR(10 g) = 5.48 W/kg (SAR corrected for target medium)
Maximum value of SAR (measured) = 9.43 W/kg

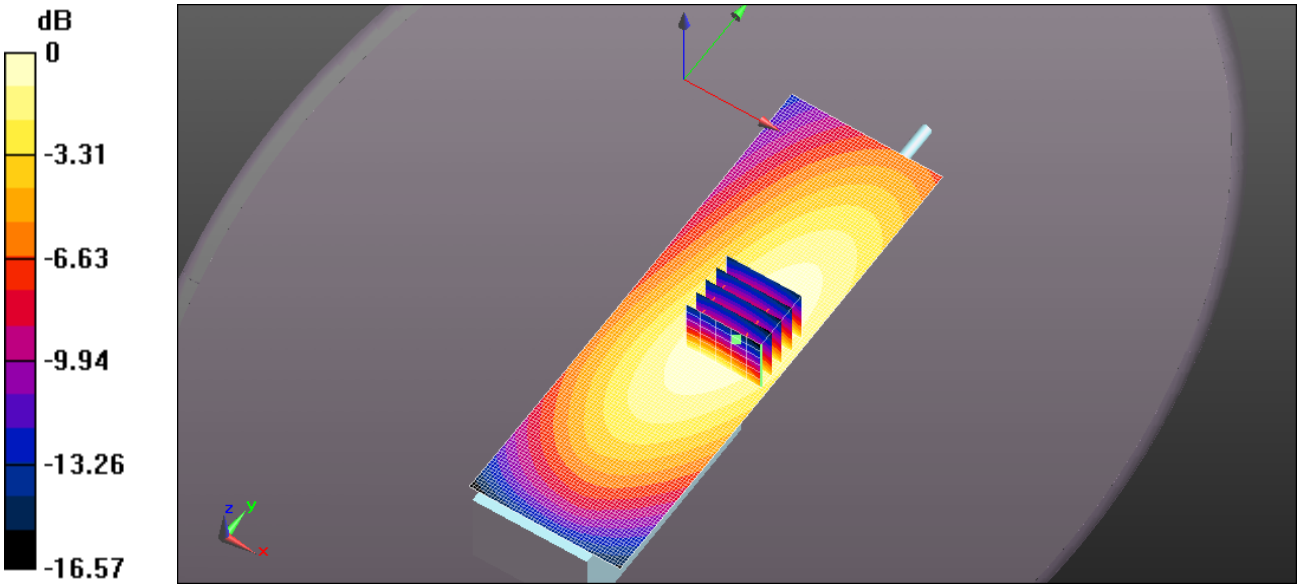

0 dB = 9.75 W/kg = 9.89 dBW/kg

Test Laboratory: Ultratech Group of Labs

FILE NAME: BP-280 SC57U 140MM 456MHZ.DA52:0

DUT: DUT Sample Brick w. Antenna; Type: Sample; Serial: 00000220-0
Program Name: System Performance Check at 450 MHz

Communication System: UID 10000, CW; Frequency: 456 MHz;Duty Cycle: 1:1
Medium parameters used (interpolated): f = 456 MHz; σ = 0.904 S/m; ε_r = 55.62; ρ = 1000 kg/m^3
Phantom section: Flat Section

DASY4 Configuration:
- Probe: EX3DV4 - SN3673; ConvF(9.11, 9.11, 9.11); Calibrated: 10/17/2014;
- Sensor-Surface: 1.4mm (Mechanical Surface Detection)
- Electronics: DAE4 Sn874; Calibrated: 3/24/2014
- Phantom: ELI 4.0; Type: QD OVA 001 BB; Serial: 1057
- ; SEMCAD X Version 14.6.10 (7331)

ICOM IC-F2000D 400-470 MHz Body/Body - Belt Clip Touching, d=0mm, Pin=4W (ES-Probe)/Area Scan (51x161x1): Interpolated grid: dx=1.500 mm, dy=1.500 mm

Info: Interpolated medium parameters used for SAR evaluation.
Maximum value of SAR (interpolated) = 7.50 W/kg

ICOM IC-F2000D 400-470 MHz Body/Body - Belt Clip Touching, d=0mm, Pin=4W (ES-Probe)/Zoom Scan (5x5x7) (6x5x7)/Cube 0: Measurement grid: dx=7.5mm, dy=7.5mm, dz=5mm
Reference Value = 82.14 V/m; Power Drift = -0.13 dB
Peak SAR (extrapolated) = 8.08 W/kg
SAR(1 g) = 5.56 W/kg; SAR(10 g) = 4.05 W/kg (SAR corrected for target medium)

Info: Interpolated medium parameters used for SAR evaluation.
Maximum value of SAR (measured) = 7.10 W/kg

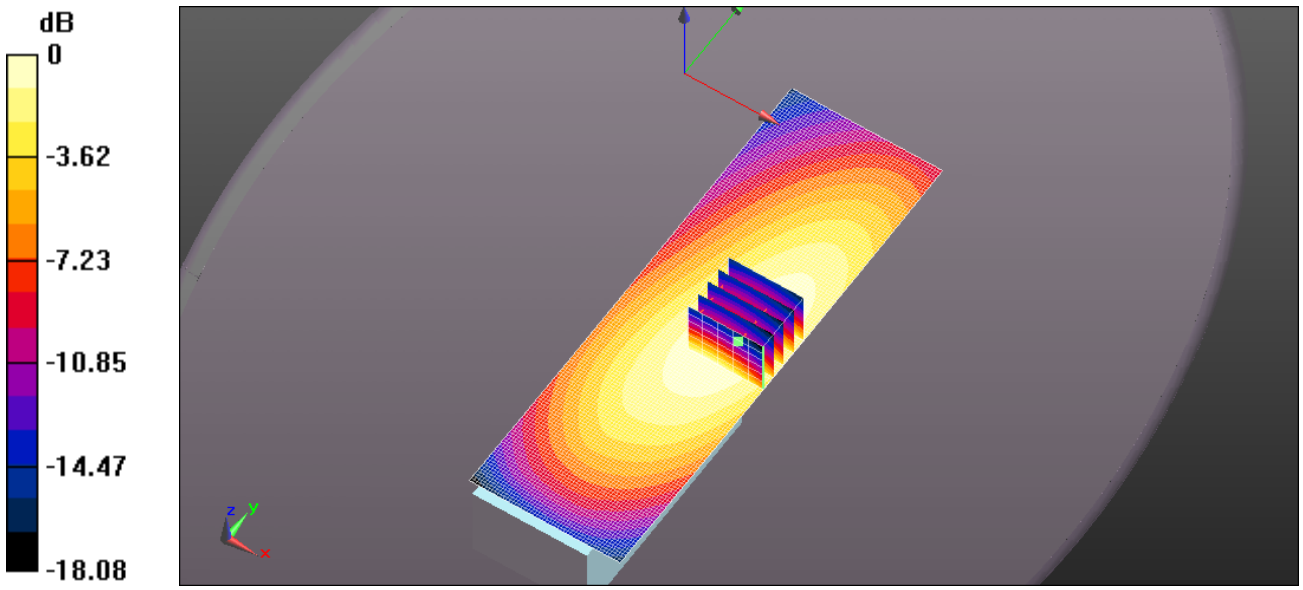

0 dB = 7.50 W/kg = 8.75 dBW/kg

Test Laboratory: Ultratech Group of Labs

FILE NAME: BP-280 SC25U 158MM 410MHZ.DA52:0

DUT: DUT Sample Brick w. Antenna; Type: Sample; Serial: 00000220-0
Program Name: System Performance Check at 450 MHz

Communication System: UID 10000, CW; Frequency: 410 MHz;Duty Cycle: 1:1
Medium parameters used: f = 410 MHz; σ = 0.86 S/m; ε_r = 56.43; ρ = 1000 kg/m^3
Phantom section: Flat Section

DASY4 Configuration:
- Probe: EX3DV4 - SN3673; ConvF(9.11, 9.11, 9.11); Calibrated: 10/17/2014;
- Sensor-Surface: 1.4mm (Mechanical Surface Detection)
- Electronics: DAE4 Sn874; Calibrated: 3/24/2014
- Phantom: ELI 4.0; Type: QD OVA 001 BB; Serial: 1057
- ; SEMCAD X Version 14.6.10 (7331)

ICOM IC-F2000D 400-470 MHz Body/Body - Belt Clip Touching, d=0mm, Pin=4W (ES-Probe)/Area Scan (51x161x1): Interpolated grid: dx=1.500 mm, dy=1.500 mm
Maximum value of SAR (interpolated) = 8.39 W/kg

ICOM IC-F2000D 400-470 MHz Body/Body - Belt Clip Touching, d=0mm, Pin=4W (ES-Probe)/Zoom Scan (5x5x7) (6x5x7)/Cube 0: Measurement grid: dx=7.5mm, dy=7.5mm, dz=5mm
Reference Value = 88.01 V/m; Power Drift = -0.19 dB
Peak SAR (extrapolated) = 9.22 W/kg
SAR(1 g) = 6.42 W/kg; SAR(10 g) = 4.73 W/kg (SAR corrected for target medium)
Maximum value of SAR (measured) = 8.14 W/kg

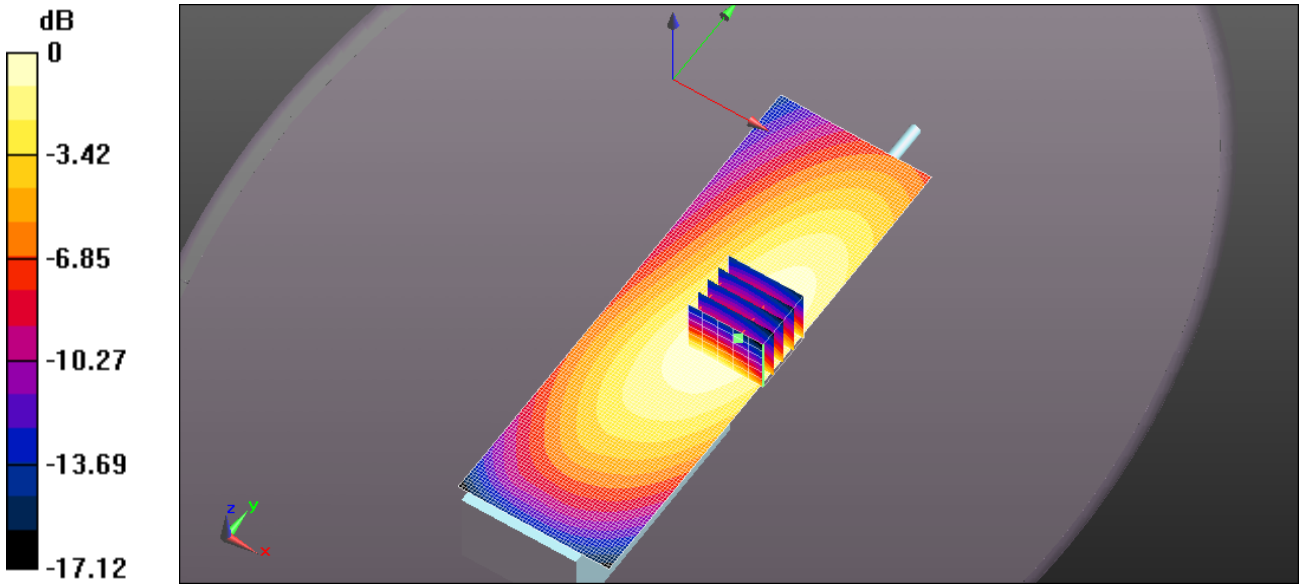

0 dB = 8.39 W/kg = 9.24 dBW/kg

Test Laboratory: Ultratech Group of Labs

FILE NAME: BP-280 SC25U 158MM 400MHZ.DA52:0

DUT: DUT Sample Brick w. Antenna; Type: Sample; Serial: 00000220-0
Program Name: System Performance Check at 450 MHz

Communication System: UID 10000, CW; Frequency: 400 MHz;Duty Cycle: 1:1
Medium parameters used: f = 400 MHz; σ = 0.851 S/m; ε_r = 56.519; ρ = 1000 kg/m^3
Phantom section: Flat Section

DASY4 Configuration:
- Probe: EX3DV4 - SN3673; ConvF(9.11, 9.11, 9.11); Calibrated: 10/17/2014;
- Sensor-Surface: 1.4mm (Mechanical Surface Detection)
- Electronics: DAE4 Sn874; Calibrated: 3/24/2014
- Phantom: ELI 4.0; Type: QD OVA 001 BB; Serial: 1057
- ; SEMCAD X Version 14.6.10 (7331)

ICOM IC-F2000D 400-470 MHz Body/Body - Belt Clip Touching, d=0mm, Pin=4W (ES-Probe)/Area Scan (51x161x1): Interpolated grid: dx=1.500 mm, dy=1.500 mm
Maximum value of SAR (interpolated) = 6.12 W/kg

ICOM IC-F2000D 400-470 MHz Body/Body - Belt Clip Touching, d=0mm, Pin=4W (ES-Probe)/Zoom Scan (5x5x7) (6x5x7)/Cube 0: Measurement grid: dx=7.5mm, dy=7.5mm, dz=5mm
Reference Value = 77.38 V/m; Power Drift = -0.12 dB
Peak SAR (extrapolated) = 6.87 W/kg
SAR(1 g) = 4.74 W/kg; SAR(10 g) = 3.48 W/kg (SAR corrected for target medium)
Maximum value of SAR (measured) = 6.05 W/kg

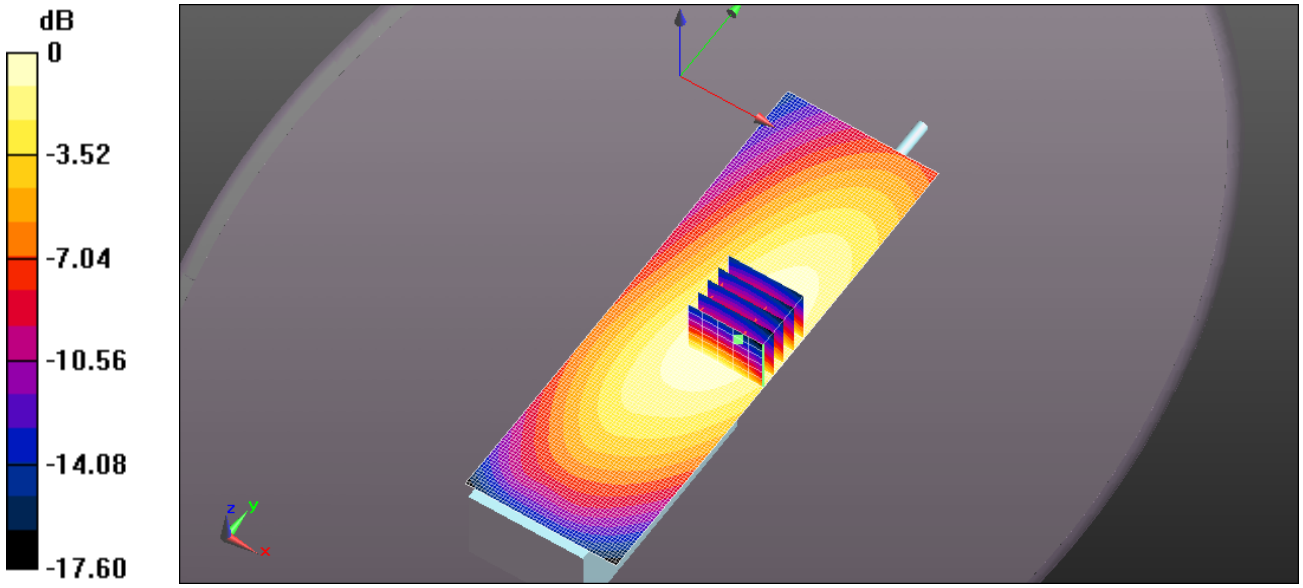

0 dB = 6.12 W/kg = 7.87 dBW/kg

Test Laboratory: Ultratech Group of Labs

FILE NAME: BP-280 SC57U 140MM 460MHZ.DA52:0

DUT: DUT Sample Brick w. Antenna; Type: Sample; Serial: 00000220-0
Program Name: System Performance Check at 450 MHz

Communication System: UID 10000, CW; Frequency: 460 MHz;Duty Cycle: 1:1
Medium parameters used: f = 460 MHz; σ = 0.906 S/m; ε_r = 55.564; ρ = 1000 kg/m^3
Phantom section: Flat Section

DASY4 Configuration:
- Probe: EX3DV4 - SN3673; ConvF(9.11, 9.11, 9.11); Calibrated: 10/17/2014;
- Sensor-Surface: 1.4mm (Mechanical Surface Detection)
- Electronics: DAE4 Sn874; Calibrated: 3/24/2014
- Phantom: ELI 4.0; Type: QD OVA 001 BB; Serial: 1057
- ; SEMCAD X Version 14.6.10 (7331)

ICOM IC-F2000D 400-470 MHz Body/Body - Belt Clip Touching, d=0mm, Pin=4W (ES-Probe)/Area Scan (41x131x1): Interpolated grid: dx=1.500 mm, dy=1.500 mm
Maximum value of SAR (interpolated) = 7.86 W/kg

ICOM IC-F2000D 400-470 MHz Body/Body - Belt Clip Touching, d=0mm, Pin=4W (ES-Probe)/Zoom Scan (5x5x7) (6x5x7)/Cube 0: Measurement grid: dx=7.5mm, dy=7.5mm, dz=5mm
Reference Value = 89.95 V/m; Power Drift = -0.13 dB
Peak SAR (extrapolated) = 8.76 W/kg
SAR(1 g) = 6.01 W/kg; SAR(10 g) = 4.35 W/kg (SAR corrected for target medium)
Maximum value of SAR (measured) = 7.72 W/kg

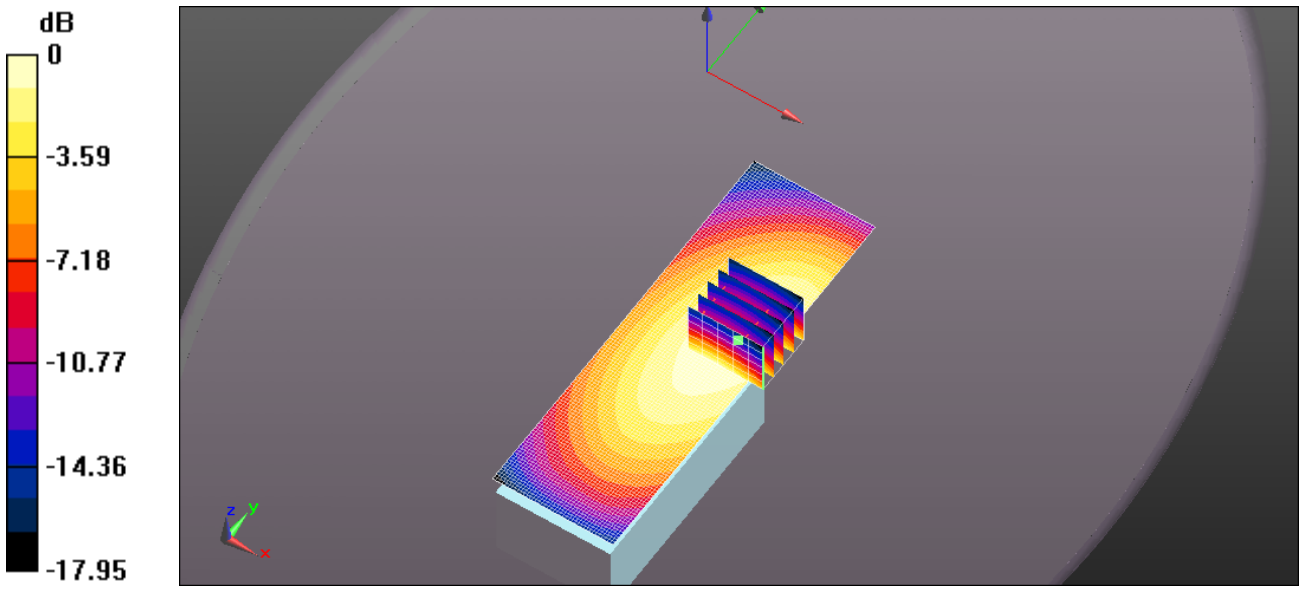

0 dB = 7.86 W/kg = 8.95 dBW/kg

Test Laboratory: Ultratech Group of Labs

FILE NAME: BP-280 SC26US 60MM 450MHZ.DA52:0

DUT: DUT Sample Brick w. Antenna; Type: Sample; Serial: 00000220-0
Program Name: System Performance Check at 450 MHz

Communication System: UID 10000, CW; Frequency: 450 MHz;Duty Cycle: 1:1
Medium parameters used: f = 450 MHz; σ = 0.9 S/m; ε_r = 55.686; ρ = 1000 kg/m^3
Phantom section: Flat Section

DASY4 Configuration:
- Probe: EX3DV4 - SN3673; ConvF(9.11, 9.11, 9.11); Calibrated: 10/17/2014;
- Sensor-Surface: 1.4mm (Mechanical Surface Detection)
- Electronics: DAE4 Sn874; Calibrated: 3/24/2014
- Phantom: ELI 4.0; Type: QD OVA 001 BB; Serial: 1057
- ; SEMCAD X Version 14.6.10 (7331)

ICOM IC-F2000D 400-470 MHz Body/Body - Belt Clip Touching, d=0mm, Pin=4W (ES-Probe)/Area Scan (51x131x1): Interpolated grid: dx=1.500 mm, dy=1.500 mm
Maximum value of SAR (interpolated) = 3.21 W/kg

ICOM IC-F2000D 400-470 MHz Body/Body - Belt Clip Touching, d=0mm, Pin=4W (ES-Probe)/Zoom Scan (5x5x7) (6x5x7)/Cube 0: Measurement grid: dx=7.5mm, dy=7.5mm, dz=5mm
Reference Value = 56.19 V/m; Power Drift = -0.16 dB
Peak SAR (extrapolated) = 3.59 W/kg
SAR(1 g) = 2.52 W/kg; SAR(10 g) = 1.82 W/kg (SAR corrected for target medium)
Maximum value of SAR (measured) = 3.15 W/kg

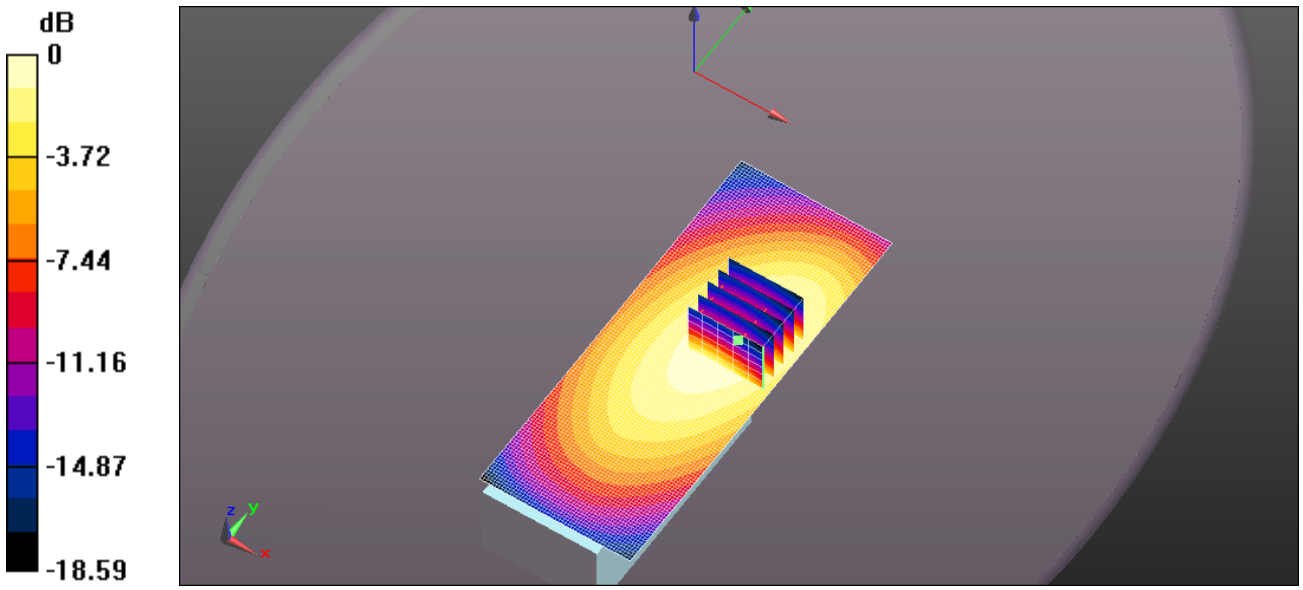

0 dB = 3.21 W/kg = 5.06 dBW/kg

Test Laboratory: Ultratech Group of Labs

FILE NAME: BP-280 SC01U 84MM 400MHZ.DA52:0

DUT: DUT Sample Brick w. Antenna; Type: Sample; Serial: 00000220-0
Program Name: System Performance Check at 450 MHz

Communication System: UID 10000, CW; Frequency: 400 MHz;Duty Cycle: 1:1
Medium parameters used: f = 400 MHz; σ = 0.851 S/m; ε_r = 56.519; ρ = 1000 kg/m^3
Phantom section: Flat Section

DASY4 Configuration:
- Probe: EX3DV4 - SN3673; ConvF(9.11, 9.11, 9.11); Calibrated: 10/17/2014;
- Sensor-Surface: 1.4mm (Mechanical Surface Detection)
- Electronics: DAE4 Sn874; Calibrated: 3/24/2014
- Phantom: ELI 4.0; Type: QD OVA 001 BB; Serial: 1057
- ; SEMCAD X Version 14.6.10 (7331)

ICOM IC-F2000D 400-470 MHz Body/Body - Belt Clip Touching, d=0mm, Pin=4W (ES-Probe)/Area Scan (51x131x1): Interpolated grid: dx=1.500 mm, dy=1.500 mm
Maximum value of SAR (interpolated) = 1.04 W/kg

ICOM IC-F2000D 400-470 MHz Body/Body - Belt Clip Touching, d=0mm, Pin=4W (ES-Probe)/Zoom Scan (5x5x7) (6x5x7)/Cube 0: Measurement grid: dx=7.5mm, dy=7.5mm, dz=5mm
Reference Value = 31.05 V/m; Power Drift = -0.19 dB
Peak SAR (extrapolated) = 1.14 W/kg
SAR(1 g) = 0.773 W/kg; SAR(10 g) = 0.563 W/kg (SAR corrected for target medium)
Maximum value of SAR (measured) = 0.988 W/kg

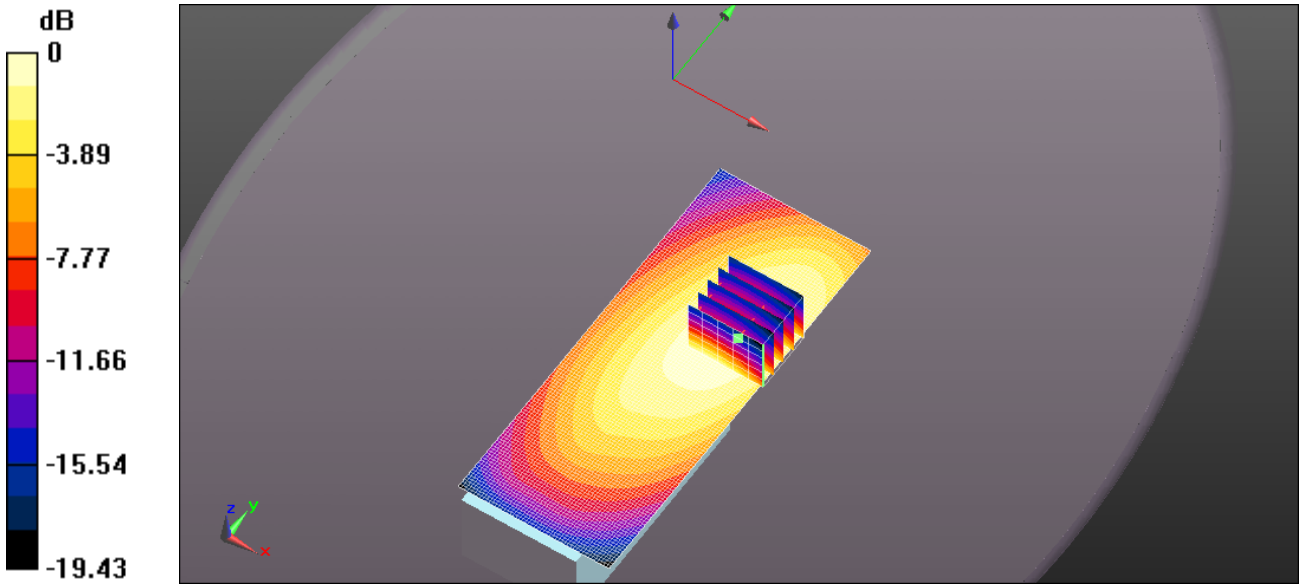

0 dB = 1.04 W/kg = 0.19 dBW/kg

Test Laboratory: Ultratech Group of Labs

FILE NAME: BP-280 SC02U 84MM 400MHZ.DA52:0

DUT: DUT Sample Brick w. Antenna; Type: Sample; Serial: 00000220-0
Program Name: System Performance Check at 450 MHz

Communication System: UID 10000, CW; Frequency: 400 MHz;Duty Cycle: 1:1
Medium parameters used: f = 400 MHz; σ = 0.851 S/m; ε_r = 56.519; ρ = 1000 kg/m^3
Phantom section: Flat Section

DASY4 Configuration:
- Probe: EX3DV4 - SN3673; ConvF(9.11, 9.11, 9.11); Calibrated: 10/17/2014;
- Sensor-Surface: 1.4mm (Mechanical Surface Detection)
- Electronics: DAE4 Sn874; Calibrated: 3/24/2014
- Phantom: ELI 4.0; Type: QD OVA 001 BB; Serial: 1057
- ; SEMCAD X Version 14.6.10 (7331)

ICOM IC-F2000D 400-470 MHz Body/Body - Belt Clip Touching, d=0mm, Pin=4W (ES-Probe)/Area Scan (51x131x1): Interpolated grid: dx=1.500 mm, dy=1.500 mm
Maximum value of SAR (interpolated) = 0.479 W/kg

ICOM IC-F2000D 400-470 MHz Body/Body - Belt Clip Touching, d=0mm, Pin=4W (ES-Probe)/Zoom Scan (5x5x7) (6x5x7)/Cube 0: Measurement grid: dx=7.5mm, dy=7.5mm, dz=5mm
Reference Value = 21.04 V/m; Power Drift = -0.22 dB
Peak SAR (extrapolated) = 0.542 W/kg
SAR(1 g) = 0.371 W/kg; SAR(10 g) = 0.270 W/kg (SAR corrected for target medium)
Maximum value of SAR (measured) = 0.475 W/kg

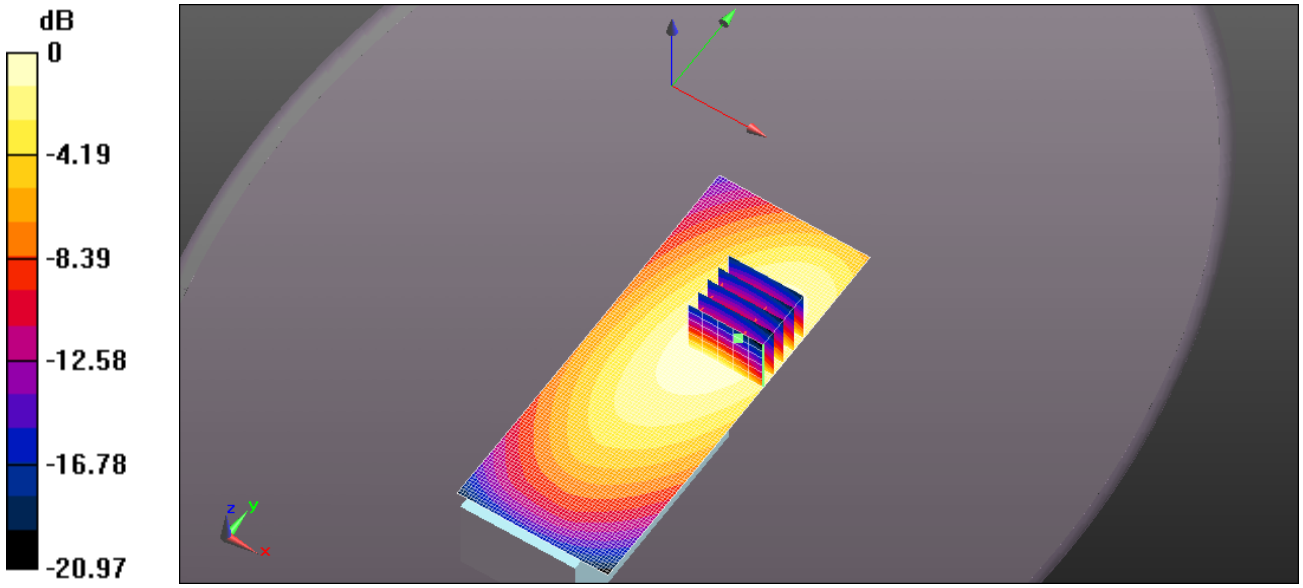

0 dB = 0.479 W/kg = -3.20 dBW/kg

Test Laboratory: Ultratech Group of Labs

FILE NAME: BP-279 SC25U 158MM 420MHZ.DA52:0

DUT: DUT Sample Brick w. Antenna; Type: Sample; Serial: 00000220-0
Program Name: System Performance Check at 450 MHz

Communication System: UID 10000, CW; Frequency: 420 MHz;Duty Cycle: 1:1
Medium parameters used: f = 420 MHz; σ = 0.874 S/m; ε_r = 56.348; ρ = 1000 kg/m^3
Phantom section: Flat Section

DASY4 Configuration:
- Probe: EX3DV4 - SN3673; ConvF(9.11, 9.11, 9.11); Calibrated: 10/17/2014;
- Sensor-Surface: 1.4mm (Mechanical Surface Detection)
- Electronics: DAE4 Sn874; Calibrated: 3/24/2014
- Phantom: ELI 4.0; Type: QD OVA 001 BB; Serial: 1057
- ; SEMCAD X Version 14.6.10 (7331)

ICOM IC-F2000D 400-470 MHz Body/Body - Belt Clip Touching, d=0mm, Pin=4W (ES-Probe)/Area Scan (51x161x1): Interpolated grid: dx=1.500 mm, dy=1.500 mm
Maximum value of SAR (interpolated) = 9.64 W/kg

ICOM IC-F2000D 400-470 MHz Body/Body - Belt Clip Touching, d=0mm, Pin=4W (ES-Probe)/Zoom Scan (5x5x7) (6x5x7)/Cube 0: Measurement grid: dx=7.5mm, dy=7.5mm, dz=5mm
Reference Value = 86.13 V/m; Power Drift = -0.15 dB
Peak SAR (extrapolated) = 10.3 W/kg
SAR(1 g) = 7.16 W/kg; SAR(10 g) = 5.25 W/kg (SAR corrected for target medium)
Maximum value of SAR (measured) = 9.10 W/kg

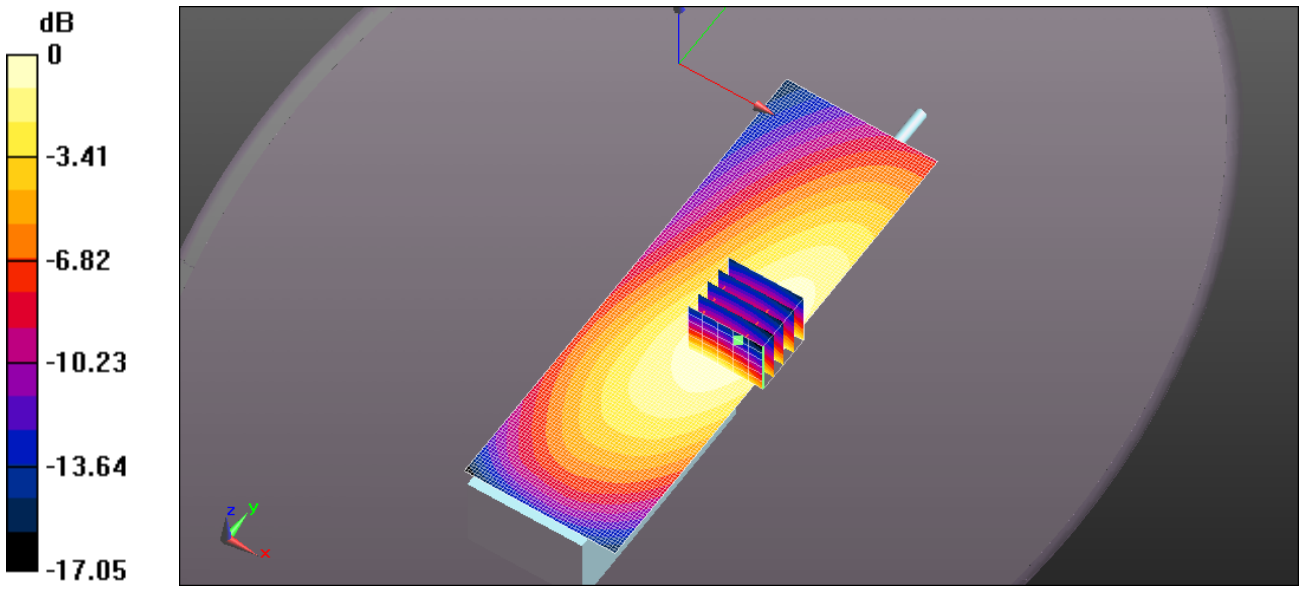

0 dB = 9.64 W/kg = 9.84 dBW/kg

Test Laboratory: Ultratech Group of Labs

FILE NAME: BP-279 SC25U 158MM 410MHZ.DA52:0

DUT: DUT Sample Brick w. Antenna; Type: Sample; Serial: 00000220-0
Program Name: System Performance Check at 450 MHz

Communication System: UID 10000, CW; Frequency: 410 MHz;Duty Cycle: 1:1
Medium parameters used: f = 410 MHz; σ = 0.86 S/m; ε_r = 56.43; ρ = 1000 kg/m^3
Phantom section: Flat Section

DASY4 Configuration:
- Probe: EX3DV4 - SN3673; ConvF(9.11, 9.11, 9.11); Calibrated: 10/17/2014;
- Sensor-Surface: 1.4mm (Mechanical Surface Detection)
- Electronics: DAE4 Sn874; Calibrated: 3/24/2014
- Phantom: ELI 4.0; Type: QD OVA 001 BB; Serial: 1057
- ; SEMCAD X Version 14.6.10 (7331)

ICOM IC-F2000D 400-470 MHz Body/Body - Belt Clip Touching, d=0mm, Pin=4W (ES-Probe)/Area Scan (51x161x1): Interpolated grid: dx=1.500 mm, dy=1.500 mm
Maximum value of SAR (interpolated) = 7.79 W/kg

ICOM IC-F2000D 400-470 MHz Body/Body - Belt Clip Touching, d=0mm, Pin=4W (ES-Probe)/Zoom Scan (5x5x7) (6x5x7)/Cube 0: Measurement grid: dx=7.5mm, dy=7.5mm, dz=5mm
Reference Value = 76.89 V/m; Power Drift = -0.21 dB
Peak SAR (extrapolated) = 8.75 W/kg
SAR(1 g) = 6.07 W/kg; SAR(10 g) = 4.45 W/kg (SAR corrected for target medium)
Maximum value of SAR (measured) = 7.72 W/kg

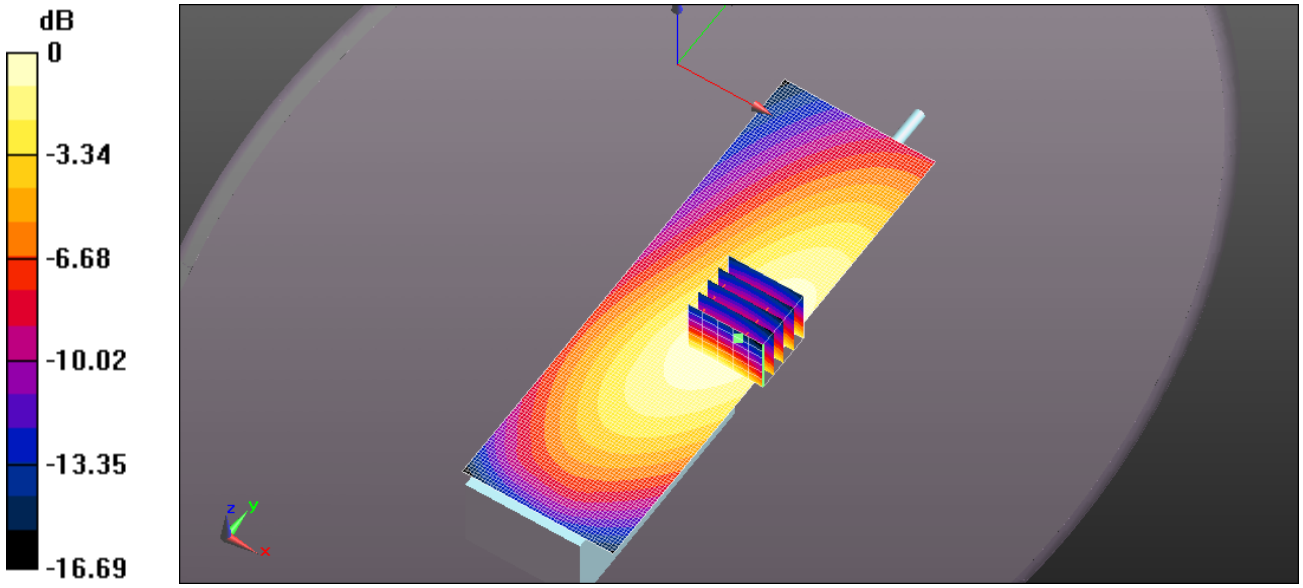

0 dB = 7.79 W/kg = 8.92 dBW/kg

Test Laboratory: Ultratech Group of Labs

FILE NAME: BP-279 SC25U 158MM 430MHZ.DA52:0

DUT: DUT Sample Brick w. Antenna; Type: Sample; Serial: 00000220-0
Program Name: System Performance Check at 450 MHz

Communication System: UID 10000, CW; Frequency: 430 MHz;Duty Cycle: 1:1
Medium parameters used: f = 430 MHz; σ = 0.884 S/m; ε_r = 56.116; ρ = 1000 kg/m^3
Phantom section: Flat Section

DASY4 Configuration:
- Probe: EX3DV4 - SN3673; ConvF(9.11, 9.11, 9.11); Calibrated: 10/17/2014;
- Sensor-Surface: 1.4mm (Mechanical Surface Detection)
- Electronics: DAE4 Sn874; Calibrated: 3/24/2014
- Phantom: ELI 4.0; Type: QD OVA 001 BB; Serial: 1057
- ; SEMCAD X Version 14.6.10 (7331)

ICOM IC-F2000D 400-470 MHz Body/Body - Belt Clip Touching, d=0mm, Pin=4W (ES-Probe)/Area Scan (51x161x1): Interpolated grid: dx=1.500 mm, dy=1.500 mm
Maximum value of SAR (interpolated) = 10.1 W/kg

ICOM IC-F2000D 400-470 MHz Body/Body - Belt Clip Touching, d=0mm, Pin=4W (ES-Probe)/Zoom Scan (5x5x7) (6x5x7)/Cube 0: Measurement grid: dx=7.5mm, dy=7.5mm, dz=5mm
Reference Value = 94.82 V/m; Power Drift = -0.20 dB
Peak SAR (extrapolated) = 11.1 W/kg
SAR(1 g) = 7.7 W/kg; SAR(10 g) = 5.65 W/kg (SAR corrected for target medium)
Maximum value of SAR (measured) = 9.78 W/kg

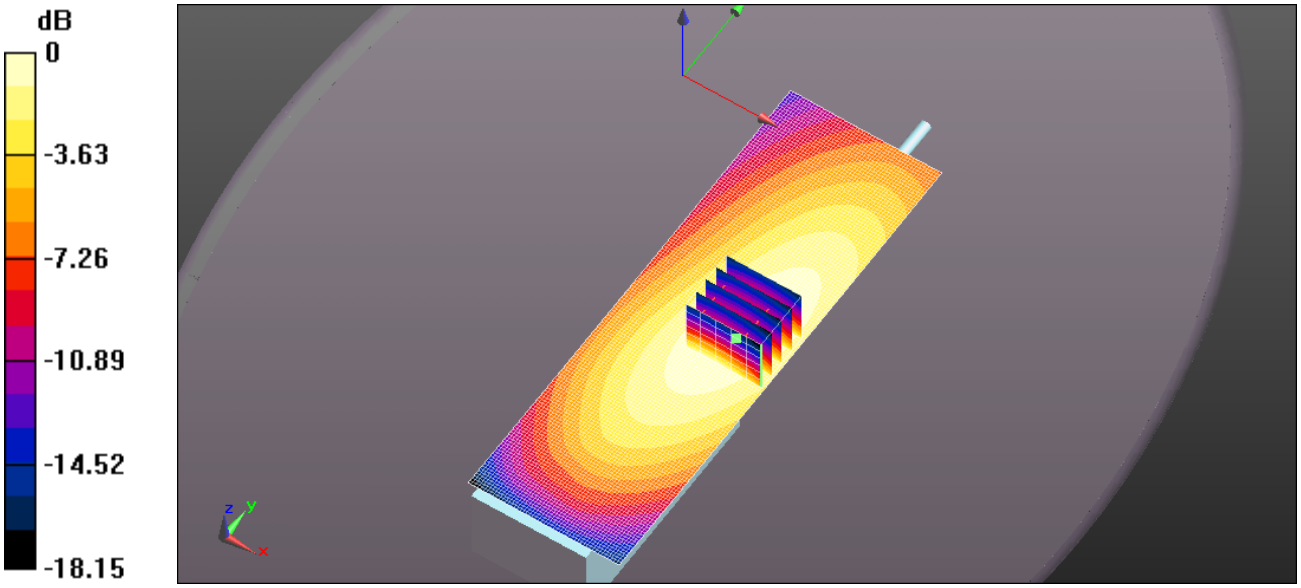

0 dB = 10.1 W/kg = 10.03 dBW/kg

Test Laboratory: Ultratech Group of Labs

FILE NAME: BP-279 SC73US 60MM 460MHZ.DA52:0

DUT: DUT Sample Brick w. Antenna; Type: Sample; Serial: 00000220-0
Program Name: System Performance Check at 450 MHz

Communication System: UID 10000, CW; Frequency: 460 MHz;Duty Cycle: 1:1
Medium parameters used: f = 460 MHz; σ = 0.906 S/m; ε_r = 55.564; ρ = 1000 kg/m^3
Phantom section: Flat Section

DASY4 Configuration:
- Probe: EX3DV4 - SN3673; ConvF(9.11, 9.11, 9.11); Calibrated: 10/17/2014;
- Sensor-Surface: 1.4mm (Mechanical Surface Detection)
- Electronics: DAE4 Sn874; Calibrated: 3/24/2014
- Phantom: ELI 4.0; Type: QD OVA 001 BB; Serial: 1057
- ; SEMCAD X Version 14.6.10 (7331)

ICOM IC-F2000D 400-470 MHz Body/Body - Belt Clip Touching, d=0mm, Pin=4W (ES-Probe)/Area Scan (51x121x1): Interpolated grid: dx=1.500 mm, dy=1.500 mm
Maximum value of SAR (interpolated) = 7.76 W/kg

ICOM IC-F2000D 400-470 MHz Body/Body - Belt Clip Touching, d=0mm, Pin=4W (ES-Probe)/Zoom Scan (5x5x7) (6x5x7)/Cube 0: Measurement grid: dx=7.5mm, dy=7.5mm, dz=5mm
Reference Value = 74.54 V/m; Power Drift = -0.16 dB
Peak SAR (extrapolated) = 8.57 W/kg
SAR(1 g) = 5.89 W/kg; SAR(10 g) = 4.27 W/kg (SAR corrected for target medium)
Maximum value of SAR (measured) = 7.55 W/kg

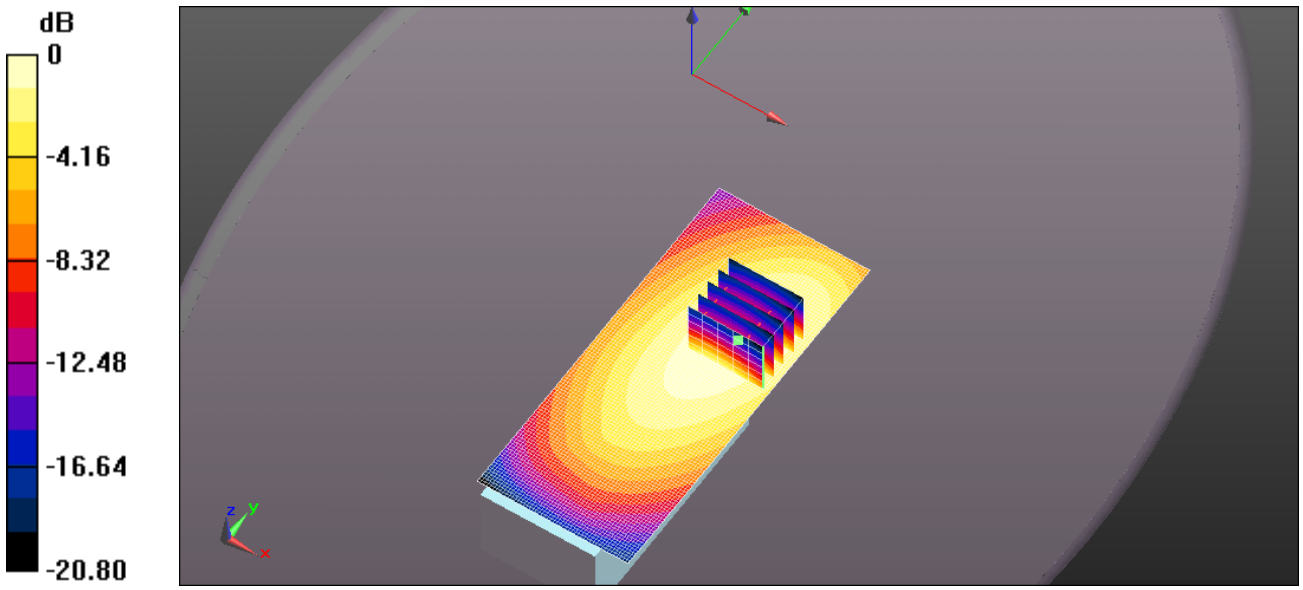

0 dB = 7.76 W/kg = 8.90 dBW/kg

Test Laboratory: Ultratech Group of Labs

FILE NAME: BP-278 SC25U 158MM 420MHZ.DA52:0

DUT: DUT Sample Brick w. Antenna; Type: Sample; Serial: 00000220-0
Program Name: System Performance Check at 450 MHz

Communication System: UID 10000, CW; Frequency: 420 MHz;Duty Cycle: 1:1
Medium parameters used: f = 420 MHz; σ = 0.874 S/m; ε_r = 56.348; ρ = 1000 kg/m^3
Phantom section: Flat Section

DASY4 Configuration:
- Probe: EX3DV4 - SN3673; ConvF(9.11, 9.11, 9.11); Calibrated: 10/17/2014;
- Sensor-Surface: 1.4mm (Mechanical Surface Detection)
- Electronics: DAE4 Sn874; Calibrated: 3/24/2014
- Phantom: ELI 4.0; Type: QD OVA 001 BB; Serial: 1057
- ; SEMCAD X Version 14.6.10 (7331)

ICOM IC-F2000D 400-470 MHz Body/Body - Belt Clip Touching, d=0mm, Pin=4W (ES-Probe)/Area Scan (51x161x1): Interpolated grid: dx=1.500 mm, dy=1.500 mm
Maximum value of SAR (interpolated) = 8.83 W/kg

ICOM IC-F2000D 400-470 MHz Body/Body - Belt Clip Touching, d=0mm, Pin=4W (ES-Probe)/Zoom Scan (5x5x7) (6x5x7)/Cube 0: Measurement grid: dx=7.5mm, dy=7.5mm, dz=5mm
Reference Value = 94.53 V/m; Power Drift = -0.15 dB
Peak SAR (extrapolated) = 9.62 W/kg
SAR(1 g) = 6.73 W/kg; SAR(10 g) = 4.95 W/kg (SAR corrected for target medium)
Maximum value of SAR (measured) = 8.45 W/kg

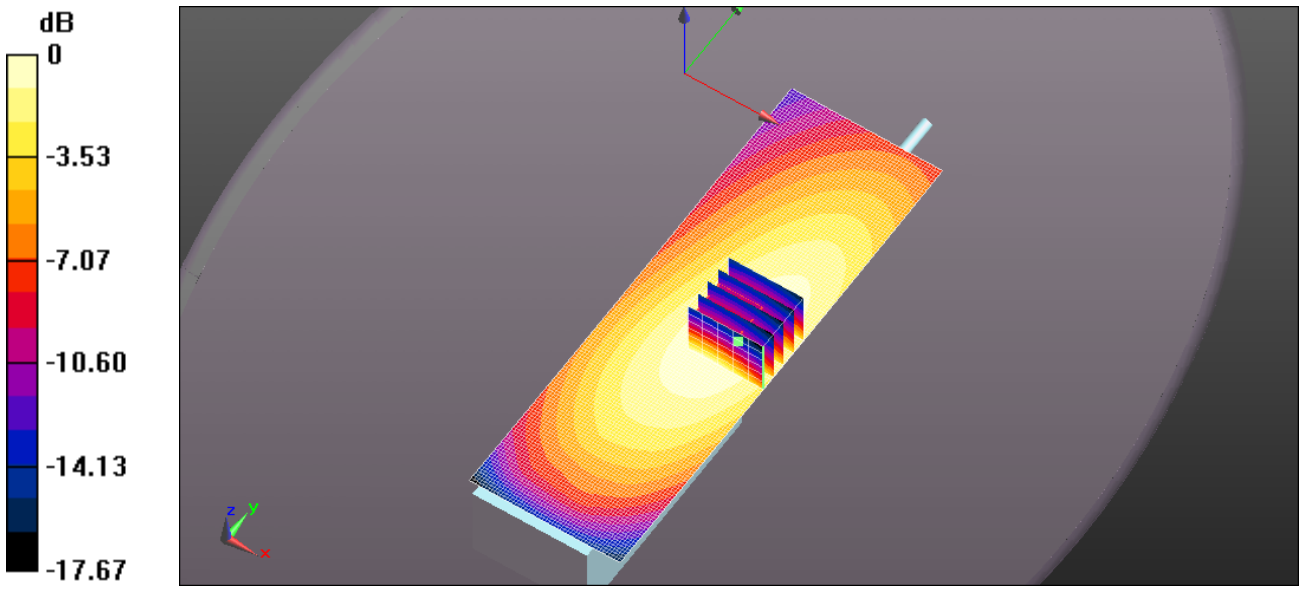

0 dB = 8.83 W/kg = 9.46 dBW/kg

Test Laboratory: Ultratech Group of Labs

FILE NAME: BP-278 SC25U 158MM 430MHZ.DA52:0

DUT: DUT Sample Brick w. Antenna; Type: Sample; Serial: 00000220-0
Program Name: System Performance Check at 450 MHz

Communication System: UID 10000, CW; Frequency: 430 MHz;Duty Cycle: 1:1
Medium parameters used: f = 430 MHz; σ = 0.884 S/m; ε_r = 56.116; ρ = 1000 kg/m^3
Phantom section: Flat Section

DASY4 Configuration:
- Probe: EX3DV4 - SN3673; ConvF(9.11, 9.11, 9.11); Calibrated: 10/17/2014;
- Sensor-Surface: 1.4mm (Mechanical Surface Detection)
- Electronics: DAE4 Sn874; Calibrated: 3/24/2014
- Phantom: ELI 4.0; Type: QD OVA 001 BB; Serial: 1057
- ; SEMCAD X Version 14.6.10 (7331)

ICOM IC-F2000D 400-470 MHz Body/Body - Belt Clip Touching, d=0mm, Pin=4W (ES-Probe)/Area Scan (51x161x1): Interpolated grid: dx=1.500 mm, dy=1.500 mm
Maximum value of SAR (interpolated) = 9.18 W/kg

ICOM IC-F2000D 400-470 MHz Body/Body - Belt Clip Touching, d=0mm, Pin=4W (ES-Probe)/Zoom Scan (5x5x7) (7x6x7)/Cube 0: Measurement grid: dx=7.5mm, dy=7.5mm, dz=5mm
Reference Value = 94.27 V/m; Power Drift = -0.14 dB
Peak SAR (extrapolated) = 10.0 W/kg
SAR(1 g) = 6.99 W/kg; SAR(10 g) = 5.13 W/kg (SAR corrected for target medium)
Maximum value of SAR (measured) = 8.80 W/kg

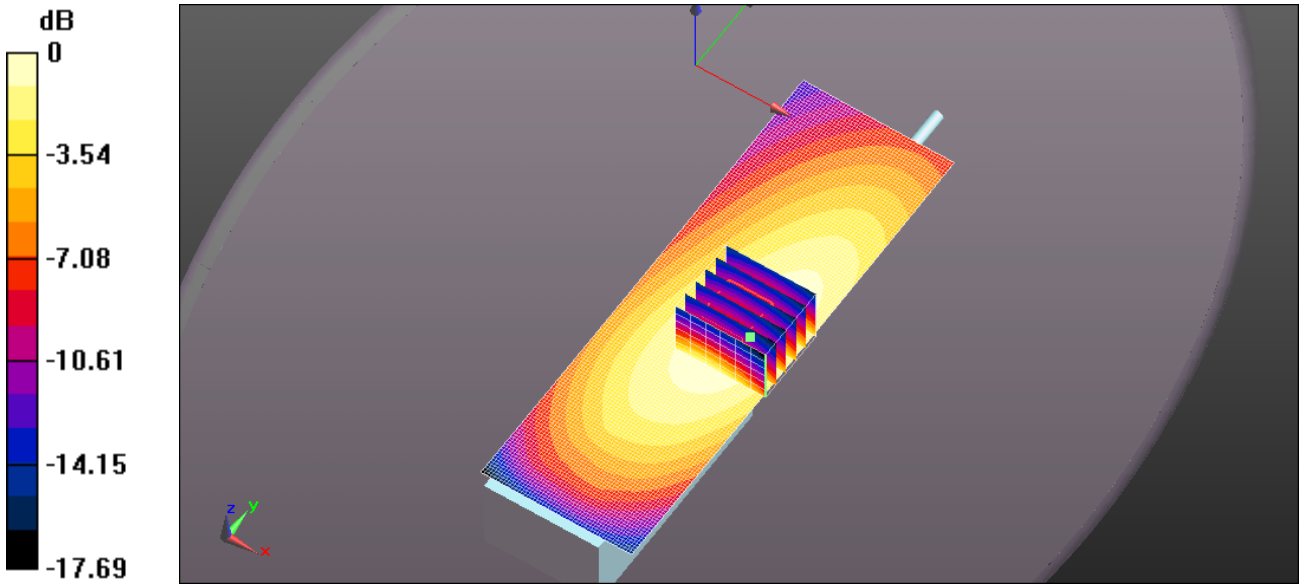

0 dB = 9.18 W/kg = 9.63 dBW/kg

EXHIBIT 4. BODY SAR MEASUREMENT – CUT ANTENNA SUMMARY

Test Laboratory: Ultratech Group of Labs

FILE NAME: BP-280 SC61UC 165MM 400MHZ.DA52:0

DUT: DUT Sample Brick w. Antenna; Type: Sample; Serial: 00000220-0
Program Name: System Performance Check at 450 MHz

Communication System: UID 10000, CW; Frequency: 460 MHz;Duty Cycle: 1:1
Medium parameters used: f = 460 MHz; σ = 0.906 S/m; ε_r = 55.564; ρ = 1000 kg/m^3
Phantom section: Flat Section

DASY4 Configuration:
- Probe: EX3DV4 - SN3673; ConvF(9.11, 9.11, 9.11); Calibrated: 10/17/2014;
- Sensor-Surface: 1.4mm (Mechanical Surface Detection)
- Electronics: DAE4 Sn874; Calibrated: 3/24/2014
- Phantom: ELI 4.0; Type: QD OVA 001 BB; Serial: 1057
- ; SEMCAD X Version 14.6.10 (7331)

ICOM IC-F2000D 400-470 MHz Body/Body - Belt Clip Touching, d=0mm, Pin=4W (ES-Probe)/Area Scan (51x181x1): Interpolated grid: dx=1.500 mm, dy=1.500 mm
Maximum value of SAR (interpolated) = 5.19 W/kg

ICOM IC-F2000D 400-470 MHz Body/Body - Belt Clip Touching, d=0mm, Pin=4W (ES-Probe)/Zoom Scan (5x5x7) (7x6x7)/Cube 0: Measurement grid: dx=7.5mm, dy=7.5mm, dz=5mm
Reference Value = 68.21 V/m; Power Drift = -0.15 dB
Peak SAR (extrapolated) = 5.90 W/kg
SAR(1 g) = 4.03 W/kg; SAR(10 g) = 2.94 W/kg (SAR corrected for target medium)
Maximum value of SAR (measured) = 5.18 W/kg

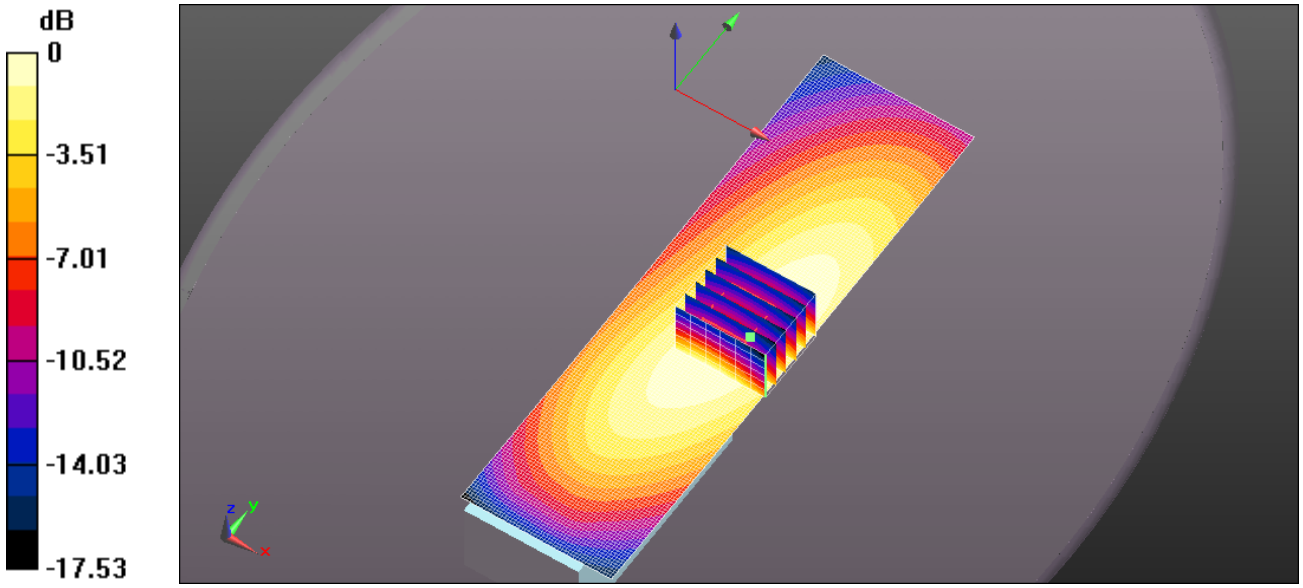

0 dB = 5.19 W/kg = 7.16 dBW/kg

Test Laboratory: Ultratech Group of Labs

FILE NAME: BP-280 SC61UC 156MM 460MHZ.DA52:0

DUT: DUT Sample Brick w. Antenna; Type: Sample; Serial: 00000220-0
Program Name: System Performance Check at 450 MHz

Communication System: UID 10000, CW; Frequency: 460 MHz;Duty Cycle: 1:1
Medium parameters used: f = 460 MHz; σ = 0.906 S/m; ε_r = 55.564; ρ = 1000 kg/m^3
Phantom section: Flat Section

DASY4 Configuration:
- Probe: EX3DV4 - SN3673; ConvF(9.11, 9.11, 9.11); Calibrated: 10/17/2014;
- Sensor-Surface: 1.4mm (Mechanical Surface Detection)
- Electronics: DAE4 Sn874; Calibrated: 3/24/2014
- Phantom: ELI 4.0; Type: QD OVA 001 BB; Serial: 1057
- ; SEMCAD X Version 14.6.10 (7331)

ICOM IC-F2000D 400-470 MHz Body/Body - Belt Clip Touching, d=0mm, Pin=4W (ES-Probe)/Area Scan (51x181x1): Interpolated grid: dx=1.500 mm, dy=1.500 mm
Maximum value of SAR (interpolated) = 8.18 W/kg

ICOM IC-F2000D 400-470 MHz Body/Body - Belt Clip Touching, d=0mm, Pin=4W (ES-Probe)/Zoom Scan (5x5x7) (6x5x7)/Cube 0: Measurement grid: dx=7.5mm, dy=7.5mm, dz=5mm
Reference Value = 84.14 V/m; Power Drift = -0.23 dB
Peak SAR (extrapolated) = 9.08 W/kg
SAR(1 g) = 6.21 W/kg; SAR(10 g) = 4.52 W/kg (SAR corrected for target medium)
Maximum value of SAR (measured) = 7.97 W/kg

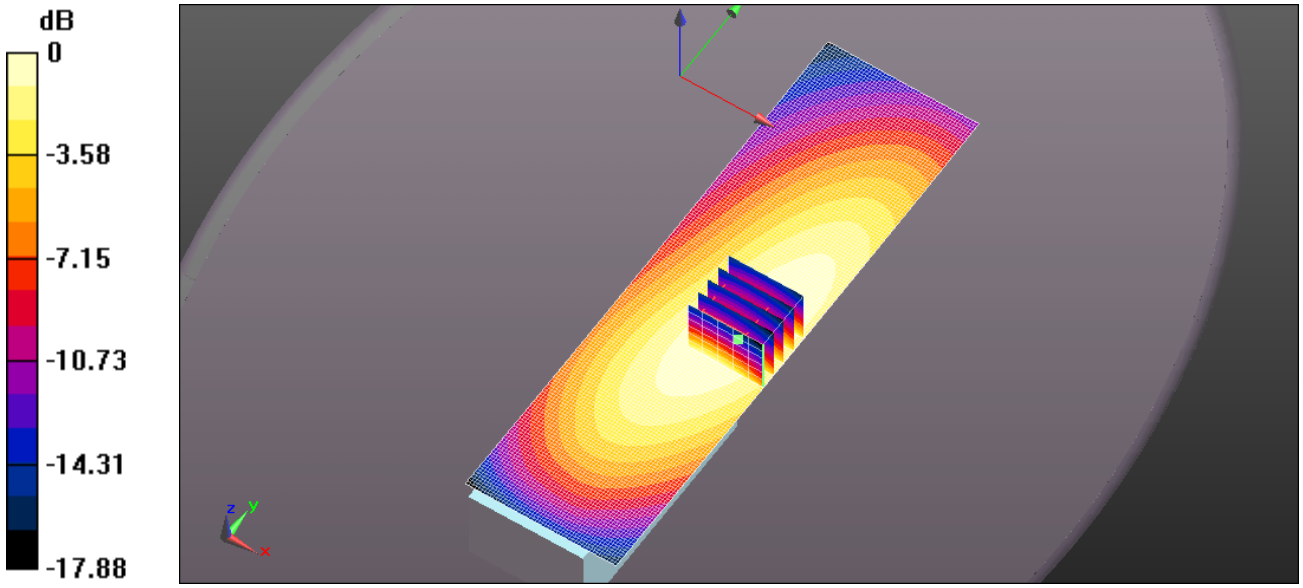

0 dB = 8.18 W/kg = 9.13 dBW/kg

Test Laboratory: Ultratech Group of Labs

FILE NAME: BP-280 SC61UC 148MM 460MHZ.DA52:0

DUT: DUT Sample Brick w. Antenna; Type: Sample; Serial: 00000220-0
Program Name: System Performance Check at 450 MHz

Communication System: UID 10000, CW; Frequency: 460 MHz;Duty Cycle: 1:1
Medium parameters used: f = 460 MHz; σ = 0.906 S/m; ε_r = 55.564; ρ = 1000 kg/m^3
Phantom section: Flat Section

DASY4 Configuration:
- Probe: EX3DV4 - SN3673; ConvF(9.11, 9.11, 9.11); Calibrated: 10/17/2014;
- Sensor-Surface: 1.4mm (Mechanical Surface Detection)
- Electronics: DAE4 Sn874; Calibrated: 3/24/2014
- Phantom: ELI 4.0; Type: QD OVA 001 BB; Serial: 1057
- ; SEMCAD X Version 14.6.10 (7331)

ICOM IC-F2000D 400-470 MHz Body/Body - Belt Clip Touching, d=0mm, Pin=4W (ES-Probe)/Area Scan (51x181x1): Interpolated grid: dx=1.500 mm, dy=1.500 mm
Maximum value of SAR (interpolated) = 10.5 W/kg

ICOM IC-F2000D 400-470 MHz Body/Body - Belt Clip Touching, d=0mm, Pin=4W (ES-Probe)/Zoom Scan (5x5x7) (6x5x7)/Cube 0: Measurement grid: dx=7.5mm, dy=7.5mm, dz=5mm
Reference Value = 95.07 V/m; Power Drift = -0.11 dB
Peak SAR (extrapolated) = 11.4 W/kg
SAR(1 g) = 7.75 W/kg; SAR(10 g) = 5.62 W/kg (SAR corrected for target medium)
Maximum value of SAR (measured) = 9.89 W/kg

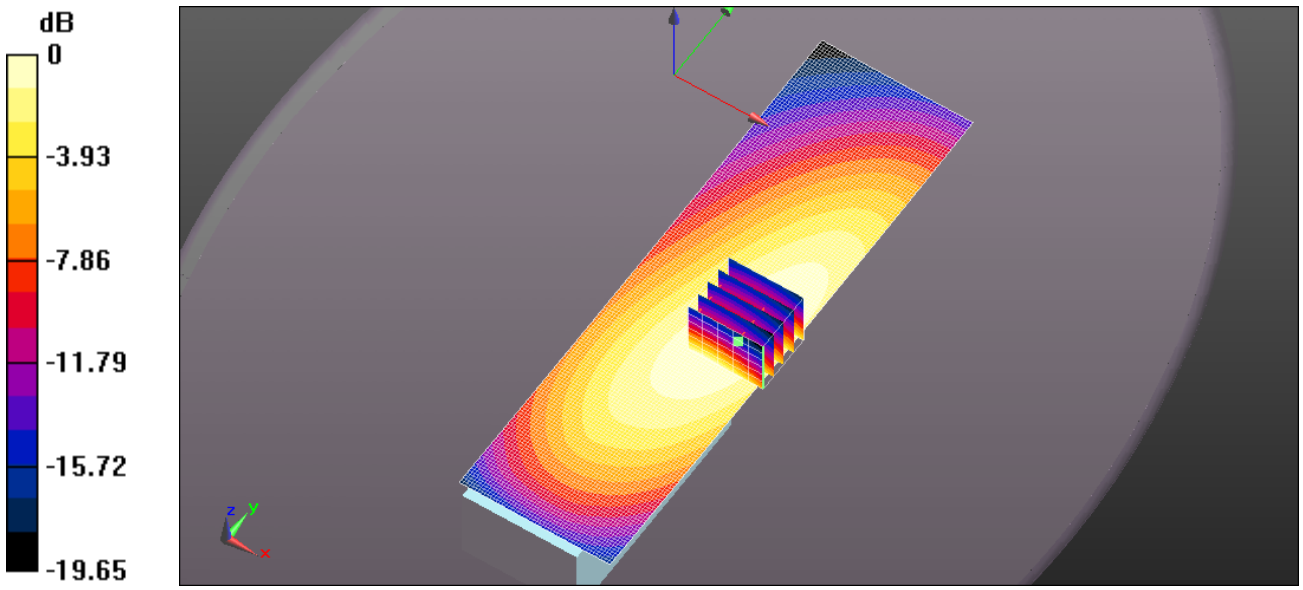

0 dB = 10.5 W/kg = 10.20 dBW/kg

Test Laboratory: Ultratech Group of Labs

FILE NAME: BP-280 SC61UC 148MM 470MHZ.DA52:0

DUT: DUT Sample Brick w. Antenna; Type: Sample; Serial: 00000220-0
Program Name: System Performance Check at 450 MHz

Communication System: UID 10000, CW; Frequency: 470 MHz;Duty Cycle: 1:1
Medium parameters used: f = 470 MHz; σ = 0.914 S/m; ε_r = 55.413; ρ = 1000 kg/m^3
Phantom section: Flat Section

DASY4 Configuration:
- Probe: EX3DV4 - SN3673; ConvF(9.11, 9.11, 9.11); Calibrated: 10/17/2014;
- Sensor-Surface: 1.4mm (Mechanical Surface Detection)
- Electronics: DAE4 Sn874; Calibrated: 3/24/2014
- Phantom: ELI 4.0; Type: QD OVA 001 BB; Serial: 1057
- ; SEMCAD X Version 14.6.10 (7331)

ICOM IC-F2000D 400-470 MHz Body/Body - Belt Clip Touching, d=0mm, Pin=4W (ES-Probe)/Area Scan (51x181x1): Interpolated grid: dx=1.500 mm, dy=1.500 mm
Maximum value of SAR (interpolated) = 10.5 W/kg

ICOM IC-F2000D 400-470 MHz Body/Body - Belt Clip Touching, d=0mm, Pin=4W (ES-Probe)/Zoom Scan (5x5x7) (6x5x7)/Cube 0: Measurement grid: dx=7.5mm, dy=7.5mm, dz=5mm
Reference Value = 91.76 V/m; Power Drift = -0.19 dB
Peak SAR (extrapolated) = 10.7 W/kg
SAR(1 g) = 7.39 W/kg; SAR(10 g) = 5.39 W/kg (SAR corrected for target medium)
Maximum value of SAR (measured) = 9.43 W/kg

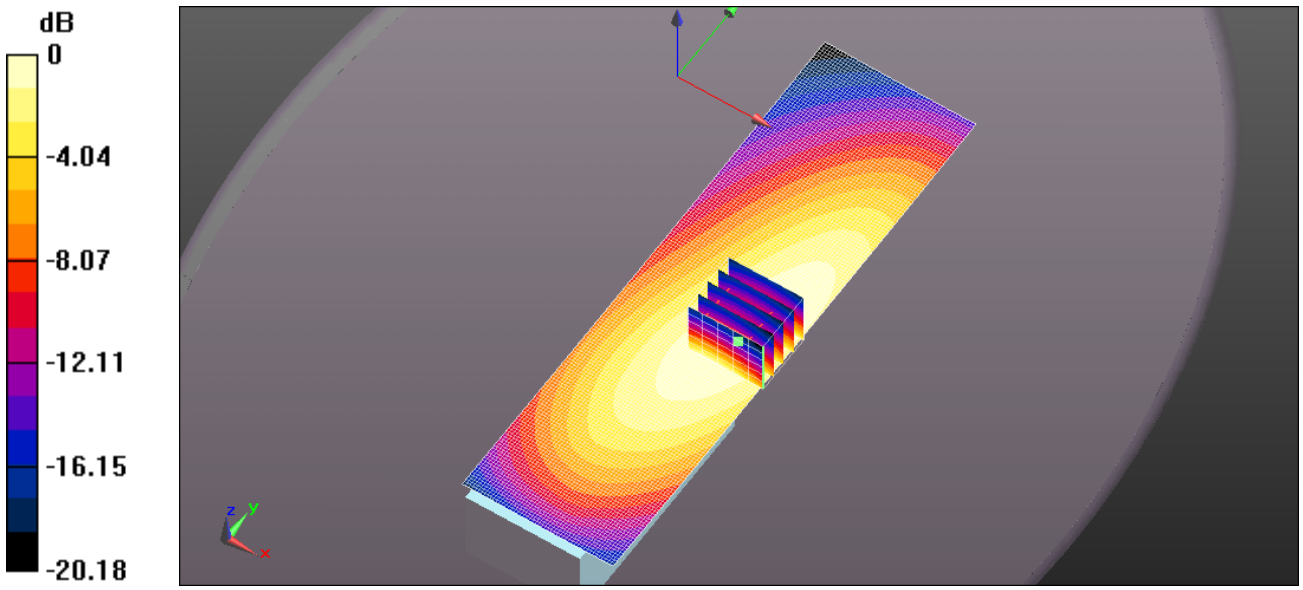

0 dB = 10.5 W/kg = 10.20 dBW/kg

Test Laboratory: Ultratech Group of Labs

FILE NAME: BP-280 SC61UC 148MM 440MHZ.DA52:0

DUT: DUT Sample Brick w. Antenna; Type: Sample; Serial: 00000220-0
Program Name: System Performance Check at 450 MHz

Communication System: UID 10000, CW; Frequency: 440 MHz;Duty Cycle: 1:1
Medium parameters used: f = 440 MHz; σ = 0.892 S/m; ε_r = 55.929; ρ = 1000 kg/m^3
Phantom section: Flat Section

DASY4 Configuration:
- Probe: EX3DV4 - SN3673; ConvF(9.11, 9.11, 9.11); Calibrated: 10/17/2014;
- Sensor-Surface: 1.4mm (Mechanical Surface Detection)
- Electronics: DAE4 Sn874; Calibrated: 3/24/2014
- Phantom: ELI 4.0; Type: QD OVA 001 BB; Serial: 1057
- ; SEMCAD X Version 14.6.10 (7331)

ICOM IC-F2000D 400-470 MHz Body/Body - Belt Clip Touching, d=0mm, Pin=4W (ES-Probe)/Area Scan (51x181x1): Interpolated grid: dx=1.500 mm, dy=1.500 mm
Maximum value of SAR (interpolated) = 8.19 W/kg

ICOM IC-F2000D 400-470 MHz Body/Body - Belt Clip Touching, d=0mm, Pin=4W (ES-Probe)/Zoom Scan (5x5x7) (6x5x7)/Cube 0: Measurement grid: dx=7.5mm, dy=7.5mm, dz=5mm
Reference Value = 82.94 V/m; Power Drift = -0.19 dB
Peak SAR (extrapolated) = 9.17 W/kg
SAR(1 g) = 6.37 W/kg; SAR(10 g) = 4.69 W/kg (SAR corrected for target medium)
Maximum value of SAR (measured) = 8.09 W/kg

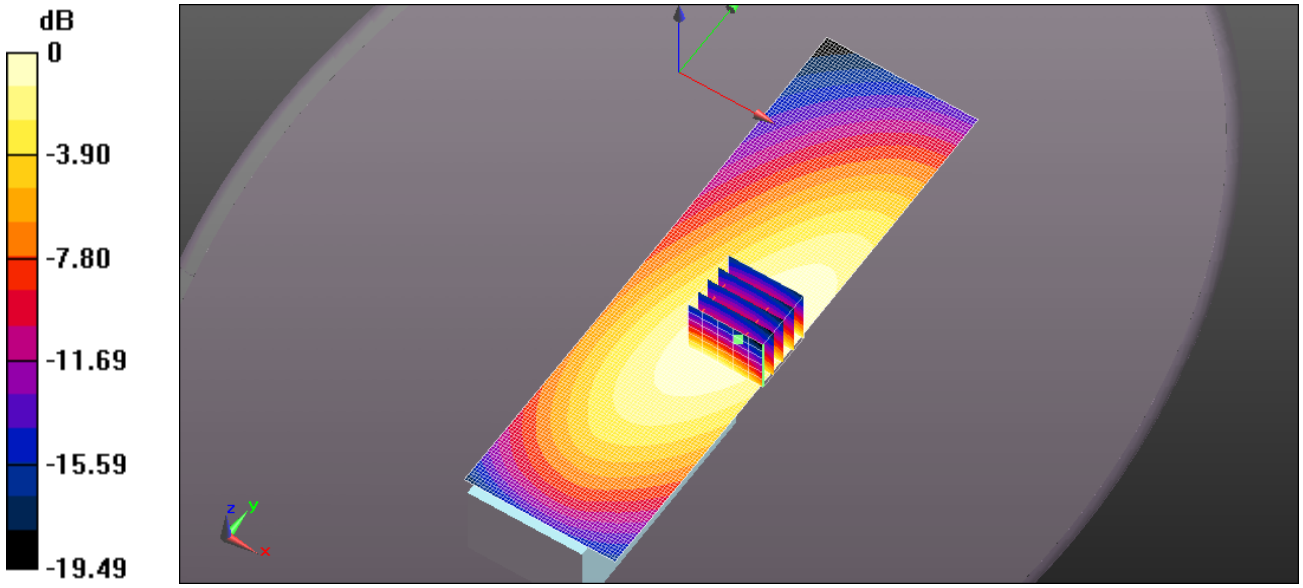

0 dB = 8.19 W/kg = 9.13 dBW/kg

Test Laboratory: Ultratech Group of Labs

FILE NAME: BP-280 SC61UC 148MM 420MHZ.DA52:0

DUT: DUT Sample Brick w. Antenna; Type: Sample; Serial: 00000220-0
Program Name: System Performance Check at 450 MHz

Communication System: UID 10000, CW; Frequency: 420 MHz;Duty Cycle: 1:1
Medium parameters used: f = 420 MHz; σ = 0.874 S/m; ε_r = 56.348; ρ = 1000 kg/m^3
Phantom section: Flat Section

DASY4 Configuration:
- Probe: EX3DV4 - SN3673; ConvF(9.11, 9.11, 9.11); Calibrated: 10/17/2014;
- Sensor-Surface: 1.4mm (Mechanical Surface Detection)
- Electronics: DAE4 Sn874; Calibrated: 3/24/2014
- Phantom: ELI 4.0; Type: QD OVA 001 BB; Serial: 1057
- ; SEMCAD X Version 14.6.10 (7331)

ICOM IC-F2000D 400-470 MHz Body/Body - Belt Clip Touching, d=0mm, Pin=4W (ES-Probe)/Area Scan (41x181x1): Interpolated grid: dx=1.500 mm, dy=1.500 mm
Maximum value of SAR (interpolated) = 2.21 W/kg

ICOM IC-F2000D 400-470 MHz Body/Body - Belt Clip Touching, d=0mm, Pin=4W (ES-Probe)/Zoom Scan (5x5x7) (6x5x7)/Cube 0: Measurement grid: dx=7.5mm, dy=7.5mm, dz=5mm
Reference Value = 47.43 V/m; Power Drift = -0.05 dB
Peak SAR (extrapolated) = 2.51 W/kg
SAR(1 g) = 1.78 W/kg; SAR(10 g) = 1.33 W/kg (SAR corrected for target medium)
Maximum value of SAR (measured) = 2.22 W/kg

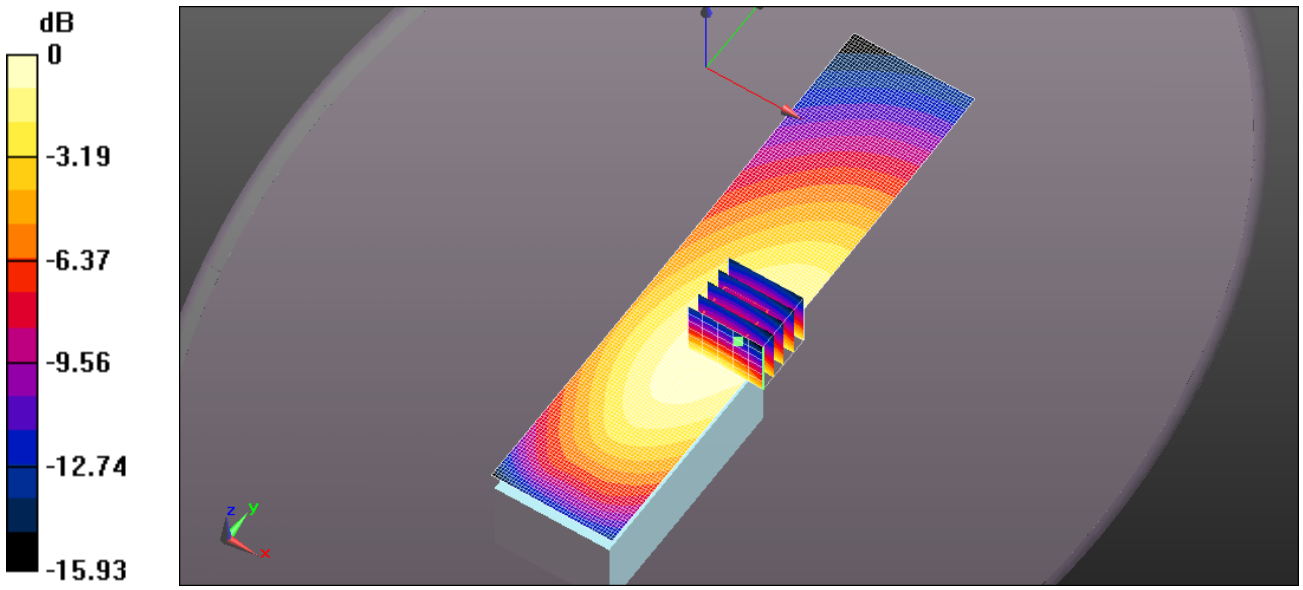

0 dB = 2.21 W/kg = 3.45 dBW/kg

Test Laboratory: Ultratech Group of Labs

FILE NAME: BP-280 SC61UC 148MM 400MHZ.DA52:0

DUT: DUT Sample Brick w. Antenna; Type: Sample; Serial: 00000220-0
Program Name: System Performance Check at 450 MHz

Communication System: UID 10000, CW; Frequency: 400 MHz;Duty Cycle: 1:1
Medium parameters used: f = 400 MHz; σ = 0.851 S/m; ε_r = 56.519; ρ = 1000 kg/m^3
Phantom section: Flat Section

DASY4 Configuration:
- Probe: EX3DV4 - SN3673; ConvF(9.11, 9.11, 9.11); Calibrated: 10/17/2014;
- Sensor-Surface: 1.4mm (Mechanical Surface Detection)
- Electronics: DAE4 Sn874; Calibrated: 3/24/2014
- Phantom: ELI 4.0; Type: QD OVA 001 BB; Serial: 1057
- ; SEMCAD X Version 14.6.10 (7331)

ICOM IC-F2000D 400-470 MHz Body/Body - Belt Clip Touching, d=0mm, Pin=4W (ES-Probe)/Area Scan (51x181x1): Interpolated grid: dx=1.500 mm, dy=1.500 mm
Maximum value of SAR (interpolated) = 4.25 W/kg

ICOM IC-F2000D 400-470 MHz Body/Body - Belt Clip Touching, d=0mm, Pin=4W (ES-Probe)/Zoom Scan (5x5x7) (6x5x7)/Cube 0: Measurement grid: dx=7.5mm, dy=7.5mm, dz=5mm
Reference Value = 62.52 V/m; Power Drift = -0.10 dB
Peak SAR (extrapolated) = 4.76 W/kg
SAR(1 g) = 3.34 W/kg; SAR(10 g) = 2.46 W/kg (SAR corrected for target medium)
Maximum value of SAR (measured) = 4.22 W/kg

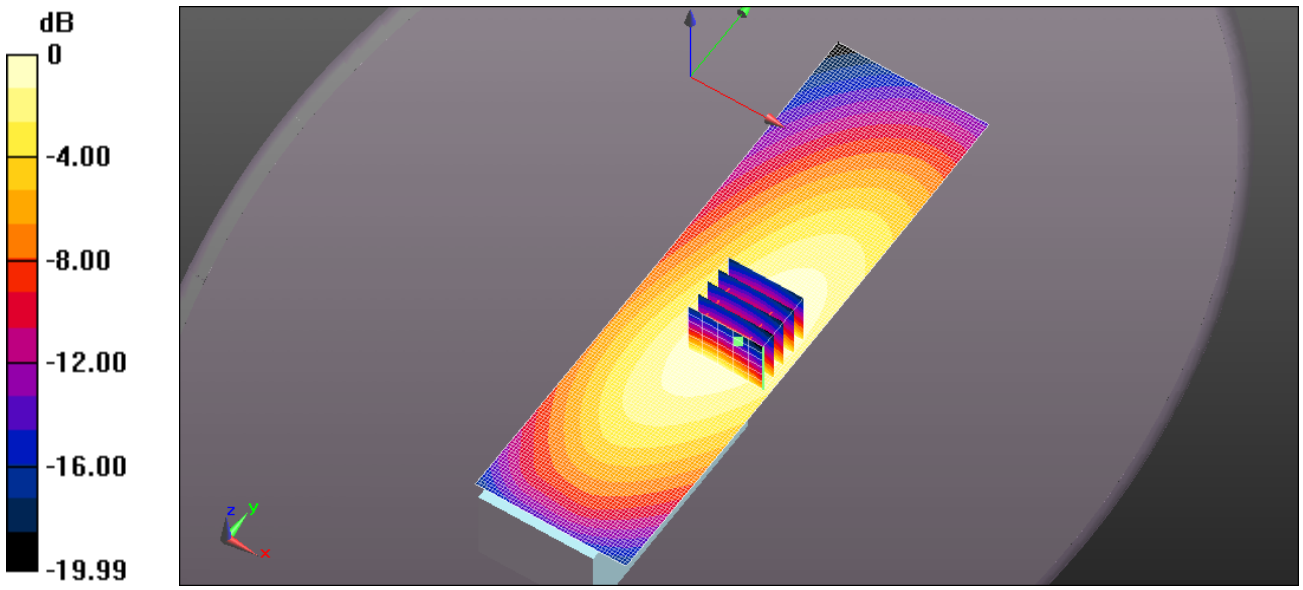

0 dB = 4.25 W/kg = 6.28 dBW/kg

Test Laboratory: Ultratech Group of Labs

FILE NAME: BP-280 SC61UC 142MM 460MHZ.DA52:0

DUT: DUT Sample Brick w. Antenna; Type: Sample; Serial: 00000220-0
Program Name: System Performance Check at 450 MHz

Communication System: UID 10000, CW; Frequency: 460 MHz;Duty Cycle: 1:1
Medium parameters used: f = 460 MHz; σ = 0.906 S/m; ε_r = 55.564; ρ = 1000 kg/m^3
Phantom section: Flat Section

DASY4 Configuration:
- Probe: EX3DV4 - SN3673; ConvF(9.11, 9.11, 9.11); Calibrated: 10/17/2014;
- Sensor-Surface: 1.4mm (Mechanical Surface Detection)
- Electronics: DAE4 Sn874; Calibrated: 3/24/2014
- Phantom: ELI 4.0; Type: QD OVA 001 BB; Serial: 1057
- ; SEMCAD X Version 14.6.10 (7331)

ICOM IC-F2000D 400-470 MHz Body/Body - Belt Clip Touching, d=0mm, Pin=4W (ES-Probe)/Area Scan (51x161x1): Interpolated grid: dx=1.500 mm, dy=1.500 mm
Maximum value of SAR (interpolated) = 10.4 W/kg

ICOM IC-F2000D 400-470 MHz Body/Body - Belt Clip Touching, d=0mm, Pin=4W (ES-Probe)/Zoom Scan (5x5x7) (6x5x7)/Cube 0: Measurement grid: dx=7.5mm, dy=7.5mm, dz=5mm
Reference Value = 94.23 V/m; Power Drift = -0.20 dB
Peak SAR (extrapolated) = 11.4 W/kg
SAR(1 g) = 7.91 W/kg; SAR(10 g) = 5.78 W/kg (SAR corrected for target medium)
Maximum value of SAR (measured) = 10.1 W/kg

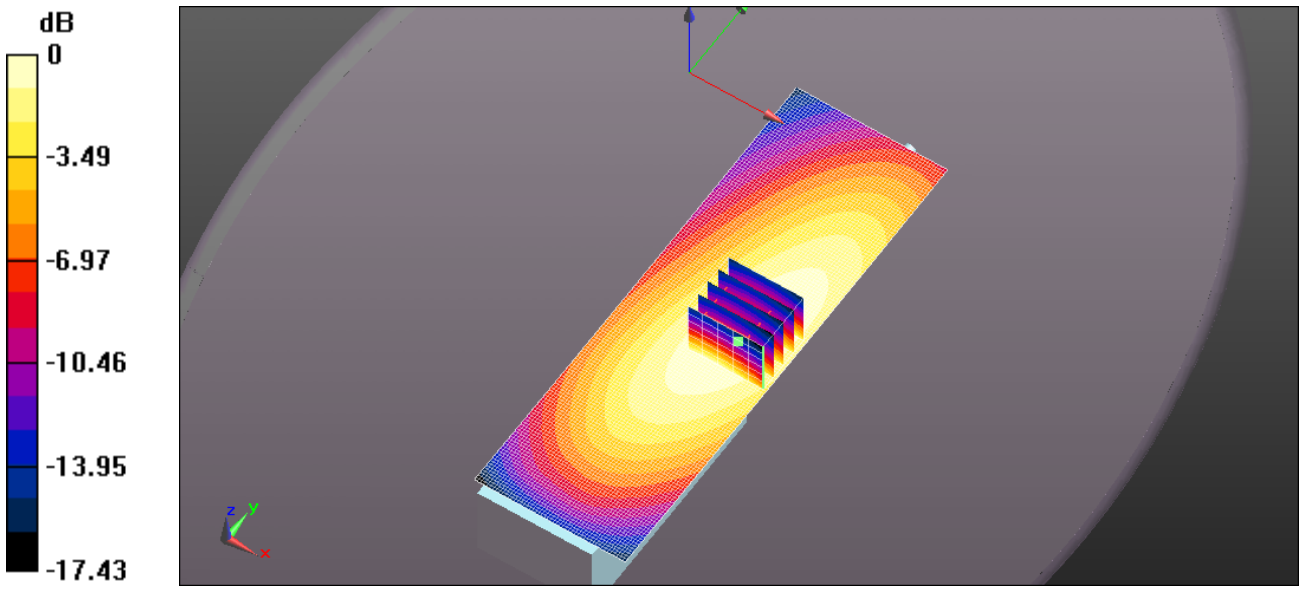

0 dB = 10.4 W/kg = 10.15 dBW/kg

Test Laboratory: Ultratech Group of Labs

FILE NAME: BP-280 SC61UC 142MM 470MHZ.DA52:0

DUT: DUT Sample Brick w. Antenna; Type: Sample; Serial: 00000220-0
Program Name: System Performance Check at 450 MHz

Communication System: UID 10000, CW; Frequency: 470 MHz;Duty Cycle: 1:1
Medium parameters used: f = 470 MHz; σ = 0.914 S/m; ε_r = 55.413; ρ = 1000 kg/m^3
Phantom section: Flat Section

DASY4 Configuration:
- Probe: EX3DV4 - SN3673; ConvF(9.11, 9.11, 9.11); Calibrated: 10/17/2014;
- Sensor-Surface: 1.4mm (Mechanical Surface Detection)
- Electronics: DAE4 Sn874; Calibrated: 3/24/2014
- Phantom: ELI 4.0; Type: QD OVA 001 BB; Serial: 1057
- ; SEMCAD X Version 14.6.10 (7331)

ICOM IC-F2000D 400-470 MHz Body/Body - Belt Clip Touching, d=0mm, Pin=4W (ES-Probe)/Area Scan (51x161x1): Interpolated grid: dx=1.500 mm, dy=1.500 mm
Maximum value of SAR (interpolated) = 9.59 W/kg

ICOM IC-F2000D 400-470 MHz Body/Body - Belt Clip Touching, d=0mm, Pin=4W (ES-Probe)/Zoom Scan (5x5x7) (6x5x7)/Cube 0: Measurement grid: dx=7.5mm, dy=7.5mm, dz=5mm
Reference Value = 91.39 V/m; Power Drift = -0.11 dB
Peak SAR (extrapolated) = 10.5 W/kg
SAR(1 g) = 7.23 W/kg; SAR(10 g) = 5.26 W/kg (SAR corrected for target medium)
Maximum value of SAR (measured) = 9.26 W/kg

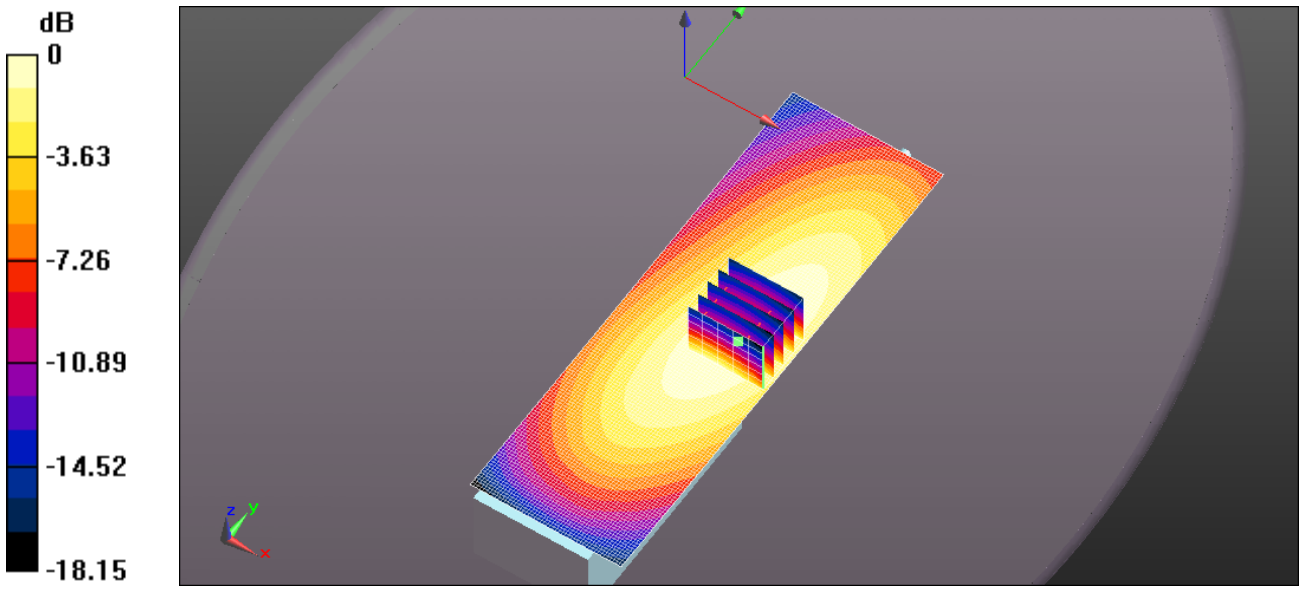

0 dB = 9.59 W/kg = 9.82 dBW/kg

Test Laboratory: Ultratech Group of Labs

FILE NAME: BP-280 SC61UC 142MM 440MHZ.DA52:0

DUT: DUT Sample Brick w. Antenna; Type: Sample; Serial: 00000220-0
Program Name: System Performance Check at 450 MHz

Communication System: UID 10000, CW; Frequency: 440 MHz;Duty Cycle: 1:1
Medium parameters used: f = 440 MHz; σ = 0.892 S/m; ε_r = 55.929; ρ = 1000 kg/m^3
Phantom section: Flat Section

DASY4 Configuration:
- Probe: EX3DV4 - SN3673; ConvF(9.11, 9.11, 9.11); Calibrated: 10/17/2014;
- Sensor-Surface: 1.4mm (Mechanical Surface Detection)
- Electronics: DAE4 Sn874; Calibrated: 3/24/2014
- Phantom: ELI 4.0; Type: QD OVA 001 BB; Serial: 1057
- ; SEMCAD X Version 14.6.10 (7331)

ICOM IC-F2000D 400-470 MHz Body/Body - Belt Clip Touching, d=0mm, Pin=4W (ES-Probe)/Area Scan (51x161x1): Interpolated grid: dx=1.500 mm, dy=1.500 mm
Maximum value of SAR (interpolated) = 5.71 W/kg

ICOM IC-F2000D 400-470 MHz Body/Body - Belt Clip Touching, d=0mm, Pin=4W (ES-Probe)/Zoom Scan (5x5x7) (6x5x7)/Cube 0: Measurement grid: dx=7.5mm, dy=7.5mm, dz=5mm
Reference Value = 72.10 V/m; Power Drift = -0.20 dB
Peak SAR (extrapolated) = 6.35 W/kg
SAR(1 g) = 4.43 W/kg; SAR(10 g) = 3.27 W/kg (SAR corrected for target medium)
Maximum value of SAR (measured) = 5.59 W/kg

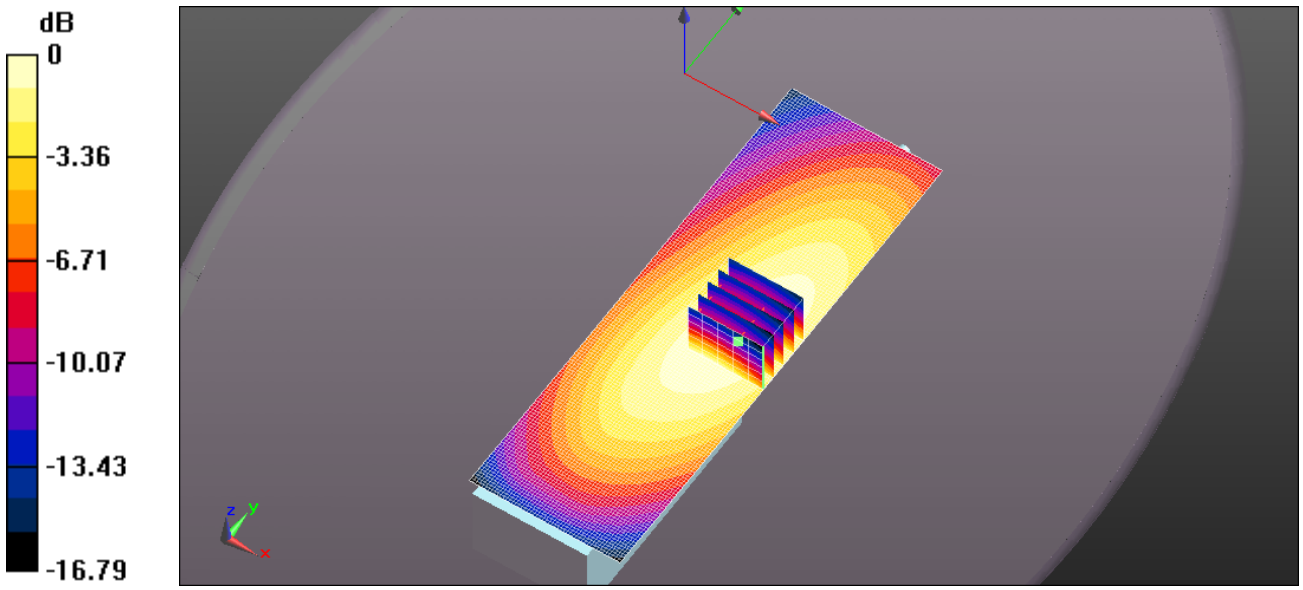

0 dB = 5.71 W/kg = 7.56 dBW/kg

Test Laboratory: Ultratech Group of Labs

FILE NAME: BP-280 SC61UC 142MM 440MHZ.DA52:0

DUT: DUT Sample Brick w. Antenna; Type: Sample; Serial: 00000220-0
Program Name: System Performance Check at 450 MHz

Communication System: UID 10000, CW; Frequency: 440 MHz;Duty Cycle: 1:1
Medium parameters used: f = 440 MHz; σ = 0.892 S/m; ε_r = 55.929; ρ = 1000 kg/m^3
Phantom section: Flat Section

DASY4 Configuration:
- Probe: EX3DV4 - SN3673; ConvF(9.11, 9.11, 9.11); Calibrated: 10/17/2014;
- Sensor-Surface: 1.4mm (Mechanical Surface Detection)
- Electronics: DAE4 Sn874; Calibrated: 3/24/2014
- Phantom: ELI 4.0; Type: QD OVA 001 BB; Serial: 1057
- ; SEMCAD X Version 14.6.10 (7331)

ICOM IC-F2000D 400-470 MHz Body/Body - Belt Clip Touching, d=0mm, Pin=4W (ES-Probe)/Area Scan (51x161x1): Interpolated grid: dx=1.500 mm, dy=1.500 mm
Maximum value of SAR (interpolated) = 7.55 W/kg

ICOM IC-F2000D 400-470 MHz Body/Body - Belt Clip Touching, d=0mm, Pin=4W (ES-Probe)/Zoom Scan (5x5x7) (6x5x7)/Cube 0: Measurement grid: dx=7.5mm, dy=7.5mm, dz=5mm
Reference Value = 85.44 V/m; Power Drift = -0.15 dB
Peak SAR (extrapolated) = 8.15 W/kg
SAR(1 g) = 5.66 W/kg; SAR(10 g) = 4.15 W/kg (SAR corrected for target medium)
Maximum value of SAR (measured) = 7.18 W/kg

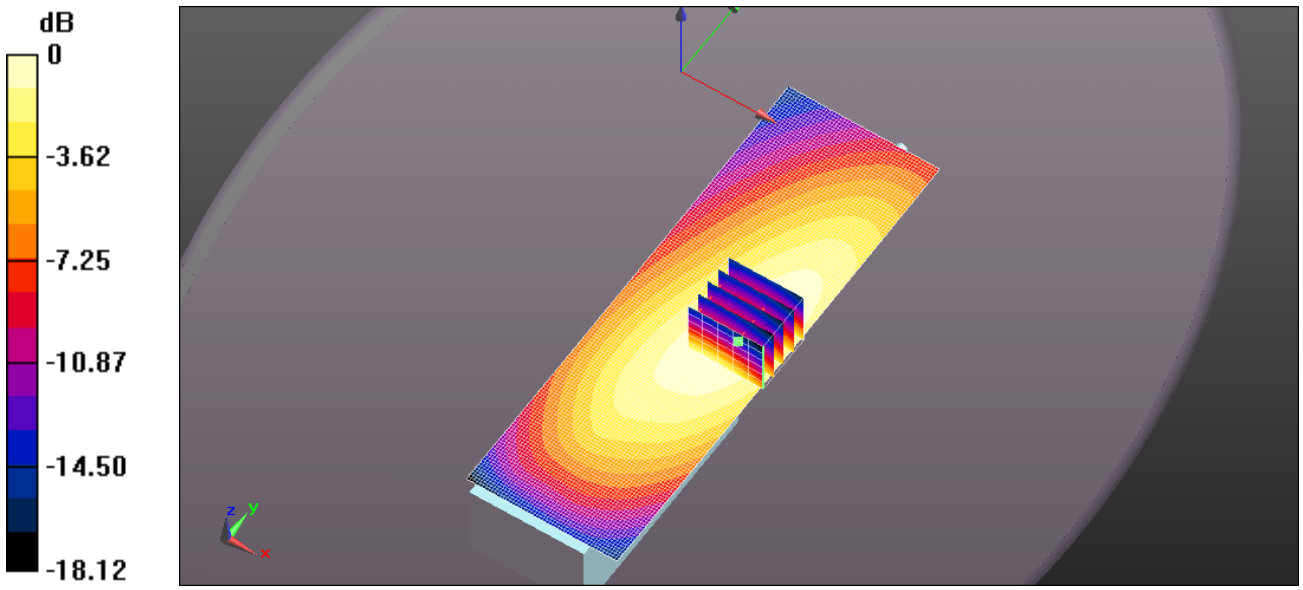

0 dB = 7.55 W/kg = 8.78 dBW/kg

Test Laboratory: Ultratech Group of Labs

FILE NAME: BP-280 SC61UC 142MM 400MHZ.DA52:0

DUT: DUT Sample Brick w. Antenna; Type: Sample; Serial: 00000220-0
Program Name: System Performance Check at 450 MHz

Communication System: UID 10000, CW; Frequency: 400 MHz;Duty Cycle: 1:1
Medium parameters used: f = 400 MHz; σ = 0.851 S/m; ε_r = 56.519; ρ = 1000 kg/m^3
Phantom section: Flat Section

DASY4 Configuration:
- Probe: EX3DV4 - SN3673; ConvF(9.11, 9.11, 9.11); Calibrated: 10/17/2014;
- Sensor-Surface: 1.4mm (Mechanical Surface Detection)
- Electronics: DAE4 Sn874; Calibrated: 3/24/2014
- Phantom: ELI 4.0; Type: QD OVA 001 BB; Serial: 1057
- ; SEMCAD X Version 14.6.10 (7331)

ICOM IC-F2000D 400-470 MHz Body/Body - Belt Clip Touching, d=0mm, Pin=4W (ES-Probe)/Area Scan (51x161x1): Interpolated grid: dx=1.500 mm, dy=1.500 mm
Maximum value of SAR (interpolated) = 3.68 W/kg

ICOM IC-F2000D 400-470 MHz Body/Body - Belt Clip Touching, d=0mm, Pin=4W (ES-Probe)/Zoom Scan (5x5x7) (6x5x7)/Cube 0: Measurement grid: dx=7.5mm, dy=7.5mm, dz=5mm
Reference Value = 55.68 V/m; Power Drift = -0.21 dB
Peak SAR (extrapolated) = 4.10 W/kg
SAR(1 g) = 2.86 W/kg; SAR(10 g) = 2.1 W/kg (SAR corrected for target medium)
Maximum value of SAR (measured) = 3.63 W/kg

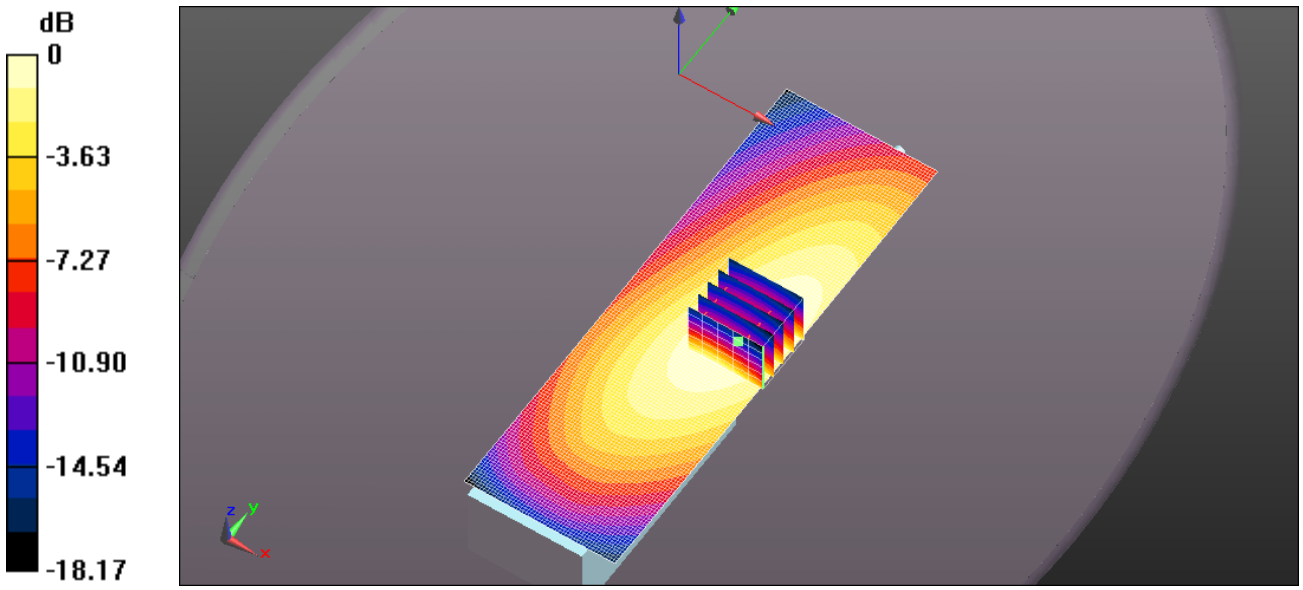

0 dB = 3.68 W/kg = 5.66 dBW/kg

Test Laboratory: Ultratech Group of Labs

FILE NAME: BP-279 SC61UC 142MM 460MHZ.DA52:0

DUT: DUT Sample Brick w. Antenna; Type: Sample; Serial: 00000220-0
Program Name: System Performance Check at 450 MHz

Communication System: UID 10000, CW; Frequency: 460 MHz;Duty Cycle: 1:1
Medium parameters used: f = 460 MHz; σ = 0.906 S/m; ε_r = 55.564; ρ = 1000 kg/m^3
Phantom section: Flat Section

DASY4 Configuration:
- Probe: EX3DV4 - SN3673; ConvF(9.11, 9.11, 9.11); Calibrated: 10/17/2014;
- Sensor-Surface: 1.4mm (Mechanical Surface Detection)
- Electronics: DAE4 Sn874; Calibrated: 3/24/2014
- Phantom: ELI 4.0; Type: QD OVA 001 BB; Serial: 1057
- ; SEMCAD X Version 14.6.10 (7331)

ICOM IC-F2000D 400-470 MHz Body/Body - Belt Clip Touching, d=0mm, Pin=4W (ES-Probe)/Area Scan (51x161x1): Interpolated grid: dx=1.500 mm, dy=1.500 mm
Maximum value of SAR (interpolated) = 9.59 W/kg

ICOM IC-F2000D 400-470 MHz Body/Body - Belt Clip Touching, d=0mm, Pin=4W (ES-Probe)/Zoom Scan (5x5x7) (6x5x7)/Cube 0: Measurement grid: dx=7.5mm, dy=7.5mm, dz=5mm
Reference Value = 90.14 V/m; Power Drift = -0.19 dB
Peak SAR (extrapolated) = 10.6 W/kg
SAR(1 g) = 7.26 W/kg; SAR(10 g) = 5.26 W/kg (SAR corrected for target medium)
Maximum value of SAR (measured) = 9.36 W/kg

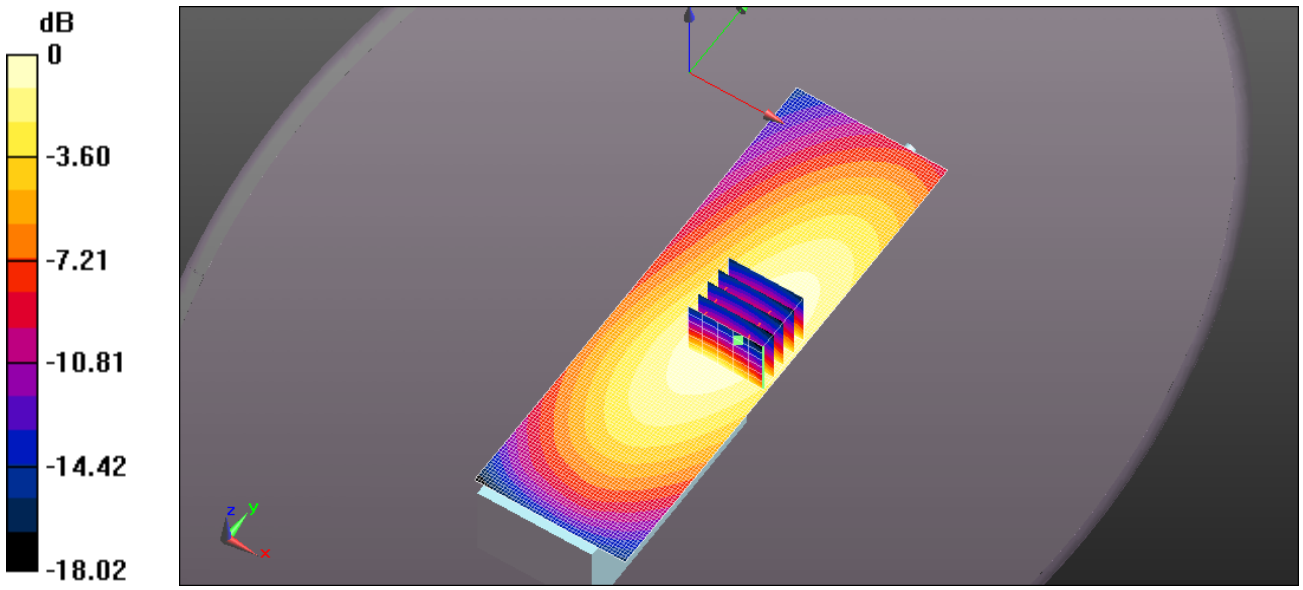

0 dB = 9.59 W/kg = 9.82 dBW/kg

Test Laboratory: Ultratech Group of Labs

FILE NAME: BP-279 SC61UC 148MM 440MHZ.DA52:0

DUT: DUT Sample Brick w. Antenna; Type: Sample; Serial: 00000220-0
Program Name: System Performance Check at 450 MHz

Communication System: UID 10000, CW; Frequency: 440 MHz;Duty Cycle: 1:1
Medium parameters used: f = 440 MHz; σ = 0.892 S/m; ε_r = 55.929; ρ = 1000 kg/m^3
Phantom section: Flat Section

DASY4 Configuration:
- Probe: EX3DV4 - SN3673; ConvF(9.11, 9.11, 9.11); Calibrated: 10/17/2014;
- Sensor-Surface: 1.4mm (Mechanical Surface Detection)
- Electronics: DAE4 Sn874; Calibrated: 3/24/2014
- Phantom: ELI 4.0; Type: QD OVA 001 BB; Serial: 1057
- ; SEMCAD X Version 14.6.10 (7331)

ICOM IC-F2000D 400-470 MHz Body/Body - Belt Clip Touching, d=0mm, Pin=4W (ES-Probe)/Area Scan (51x161x1): Interpolated grid: dx=1.500 mm, dy=1.500 mm
Maximum value of SAR (interpolated) = 9.13 W/kg

ICOM IC-F2000D 400-470 MHz Body/Body - Belt Clip Touching, d=0mm, Pin=4W (ES-Probe)/Zoom Scan (5x5x7) (6x5x7)/Cube 0: Measurement grid: dx=7.5mm, dy=7.5mm, dz=5mm
Reference Value = 90.68 V/m; Power Drift = -0.17 dB
Peak SAR (extrapolated) = 10.0 W/kg
SAR(1 g) = 6.98 W/kg; SAR(10 g) = 5.12 W/kg (SAR corrected for target medium)
Maximum value of SAR (measured) = 8.86 W/kg

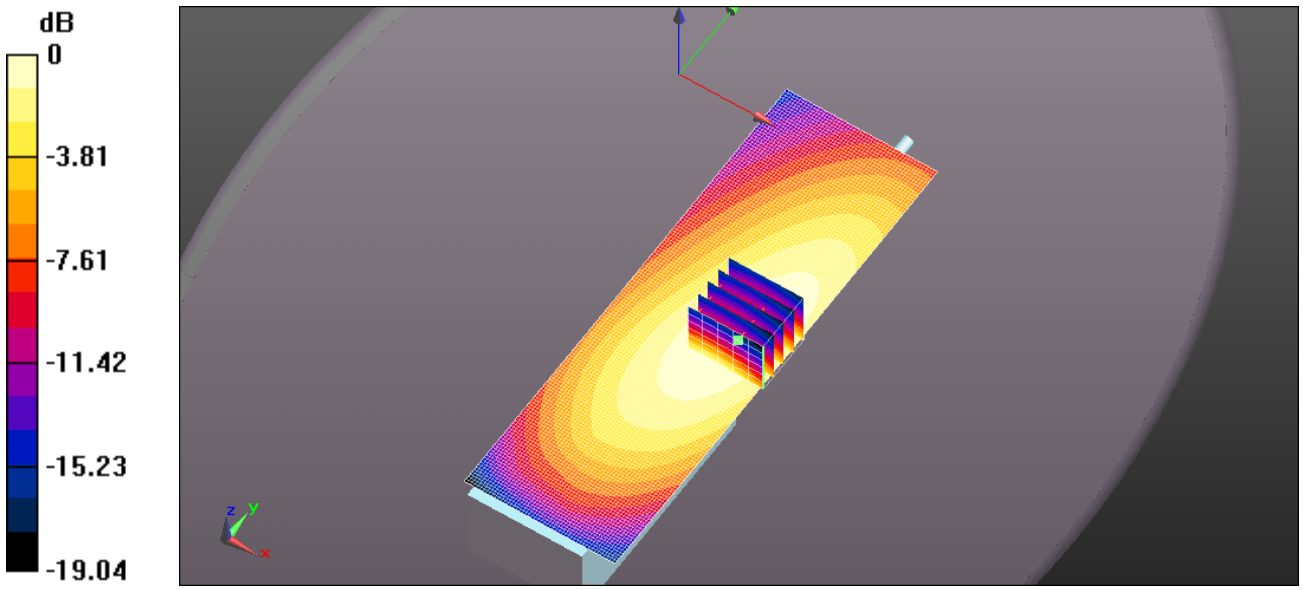

0 dB = 9.13 W/kg = 9.60 dBW/kg

Test Laboratory: Ultratech Group of Labs

FILE NAME: BP-279 SC61UC 148MM 470MHZ.DA52:0

DUT: DUT Sample Brick w. Antenna; Type: Sample; Serial: 00000220-0
Program Name: System Performance Check at 450 MHz

Communication System: UID 10000, CW; Frequency: 470 MHz;Duty Cycle: 1:1
Medium parameters used: f = 470 MHz; σ = 0.914 S/m; ε_r = 55.413; ρ = 1000 kg/m^3
Phantom section: Flat Section

DASY4 Configuration:
- Probe: EX3DV4 - SN3673; ConvF(9.11, 9.11, 9.11); Calibrated: 10/17/2014;
- Sensor-Surface: 1.4mm (Mechanical Surface Detection)
- Electronics: DAE4 Sn874; Calibrated: 3/24/2014
- Phantom: ELI 4.0; Type: QD OVA 001 BB; Serial: 1057
- ; SEMCAD X Version 14.6.10 (7331)

ICOM IC-F2000D 400-470 MHz Body/Body - Belt Clip Touching, d=0mm, Pin=4W (ES-Probe)/Area Scan (51x161x1): Interpolated grid: dx=1.500 mm, dy=1.500 mm
Maximum value of SAR (interpolated) = 8.70 W/kg

ICOM IC-F2000D 400-470 MHz Body/Body - Belt Clip Touching, d=0mm, Pin=4W (ES-Probe)/Zoom Scan (5x5x7) (6x5x7)/Cube 0: Measurement grid: dx=7.5mm, dy=7.5mm, dz=5mm
Reference Value = 85.87 V/m; Power Drift = -0.21 dB
Peak SAR (extrapolated) = 8.31 W/kg
SAR(1 g) = 5.7 W/kg; SAR(10 g) = 4.14 W/kg (SAR corrected for target medium)
Maximum value of SAR (measured) = 7.32 W/kg

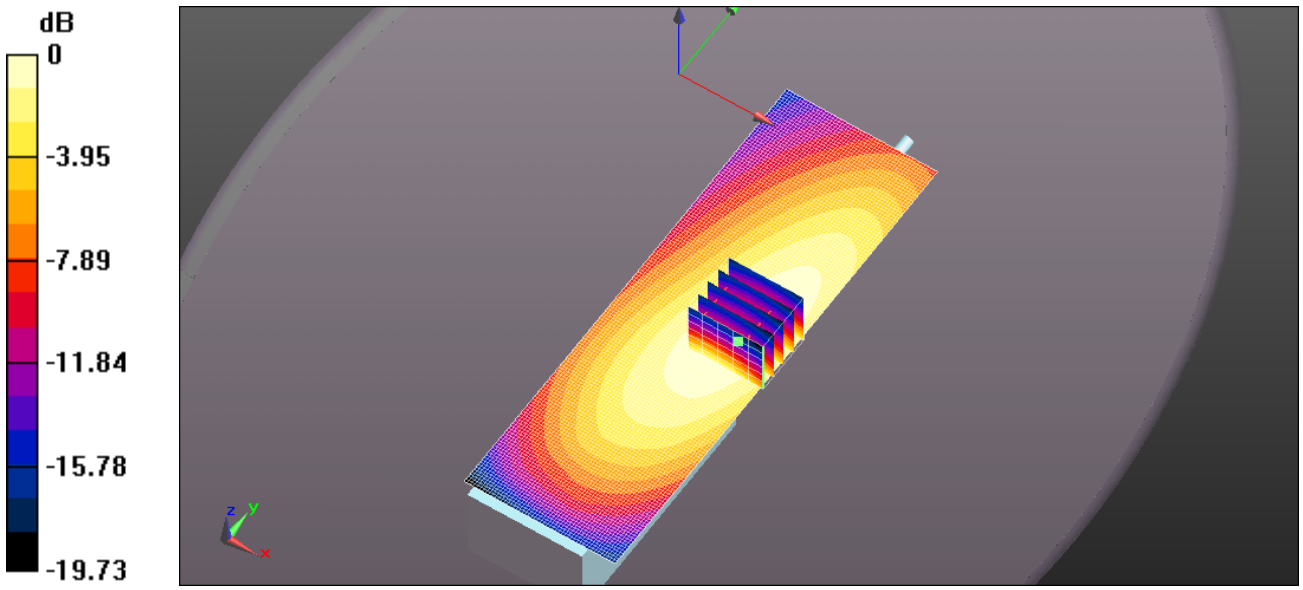

0 dB = 8.70 W/kg = 9.39 dBW/kg

Test Laboratory: Ultratech Group of Labs

FILE NAME: BP-279 SC61UC 142MM 440MHZ.DA52:0

DUT: DUT Sample Brick w. Antenna; Type: Sample; Serial: 00000220-0
Program Name: System Performance Check at 450 MHz

Communication System: UID 10000, CW; Frequency: 440 MHz;Duty Cycle: 1:1
Medium parameters used: f = 440 MHz; σ = 0.892 S/m; ε_r = 55.929; ρ = 1000 kg/m^3
Phantom section: Flat Section

DASY4 Configuration:
- Probe: EX3DV4 - SN3673; ConvF(9.11, 9.11, 9.11); Calibrated: 10/17/2014;
- Sensor-Surface: 1.4mm (Mechanical Surface Detection)
- Electronics: DAE4 Sn874; Calibrated: 3/24/2014
- Phantom: ELI 4.0; Type: QD OVA 001 BB; Serial: 1057
- ; SEMCAD X Version 14.6.10 (7331)

ICOM IC-F2000D 400-470 MHz Body/Body - Belt Clip Touching, d=0mm, Pin=4W (ES-Probe)/Area Scan (51x161x1): Interpolated grid: dx=1.500 mm, dy=1.500 mm
Maximum value of SAR (interpolated) = 7.03 W/kg

ICOM IC-F2000D 400-470 MHz Body/Body - Belt Clip Touching, d=0mm, Pin=4W (ES-Probe)/Zoom Scan (5x5x7) (6x5x7)/Cube 0: Measurement grid: dx=7.5mm, dy=7.5mm, dz=5mm
Reference Value = 80.11 V/m; Power Drift = -0.13 dB
Peak SAR (extrapolated) = 7.59 W/kg
SAR(1 g) = 5.27 W/kg; SAR(10 g) = 3.86 W/kg (SAR corrected for target medium)
Maximum value of SAR (measured) = 6.69 W/kg

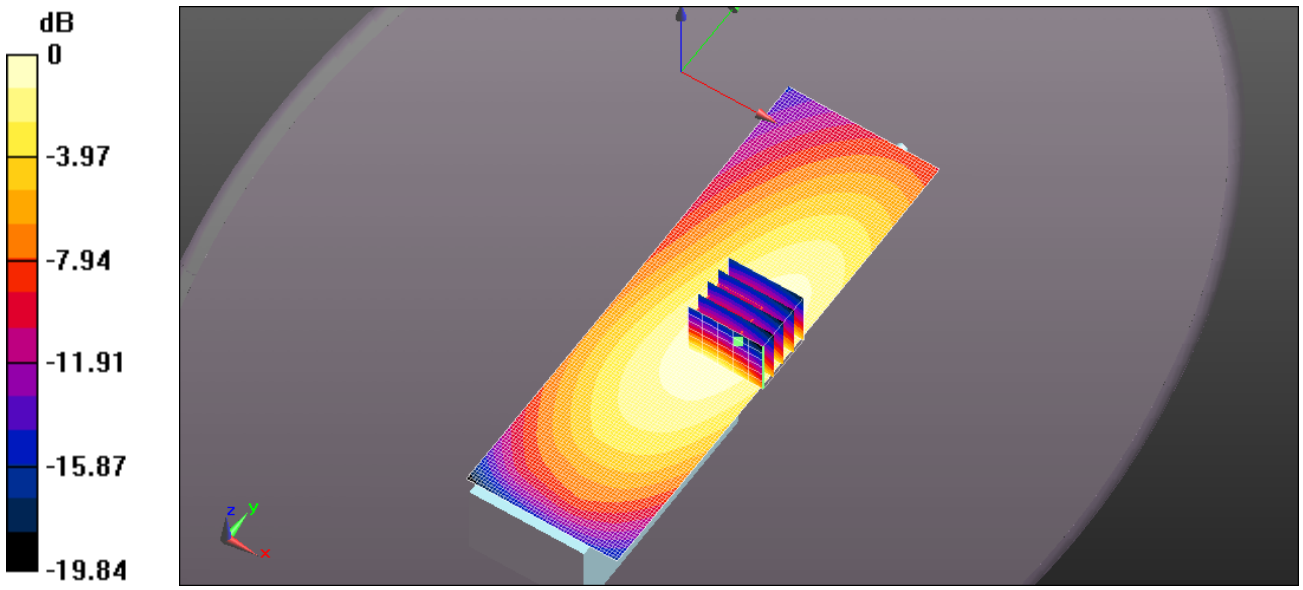

0 dB = 7.03 W/kg = 8.47 dBW/kg

Test Laboratory: Ultratech Group of Labs

FILE NAME: BP-279 SC61UC 142MM 470MHZ.DA52:0

DUT: DUT Sample Brick w. Antenna; Type: Sample; Serial: 00000220-0
Program Name: System Performance Check at 450 MHz

Communication System: UID 10000, CW; Frequency: 470 MHz;Duty Cycle: 1:1
Medium parameters used: f = 470 MHz; σ = 0.914 S/m; ε_r = 55.413; ρ = 1000 kg/m^3
Phantom section: Flat Section

DASY4 Configuration:
- Probe: EX3DV4 - SN3673; ConvF(9.11, 9.11, 9.11); Calibrated: 10/17/2014;
- Sensor-Surface: 1.4mm (Mechanical Surface Detection)
- Electronics: DAE4 Sn874; Calibrated: 3/24/2014
- Phantom: ELI 4.0; Type: QD OVA 001 BB; Serial: 1057
- ; SEMCAD X Version 14.6.10 (7331)

ICOM IC-F2000D 400-470 MHz Body/Body - Belt Clip Touching, d=0mm, Pin=4W (ES-Probe)/Area Scan (51x161x1): Interpolated grid: dx=1.500 mm, dy=1.500 mm
Maximum value of SAR (interpolated) = 8.71 W/kg

ICOM IC-F2000D 400-470 MHz Body/Body - Belt Clip Touching, d=0mm, Pin=4W (ES-Probe)/Zoom Scan (5x5x7) (6x5x7)/Cube 0: Measurement grid: dx=7.5mm, dy=7.5mm, dz=5mm
Reference Value = 83.30 V/m; Power Drift = -0.13 dB
Peak SAR (extrapolated) = 8.34 W/kg
SAR(1 g) = 5.76 W/kg; SAR(10 g) = 4.17 W/kg (SAR corrected for target medium)
Maximum value of SAR (measured) = 7.36 W/kg

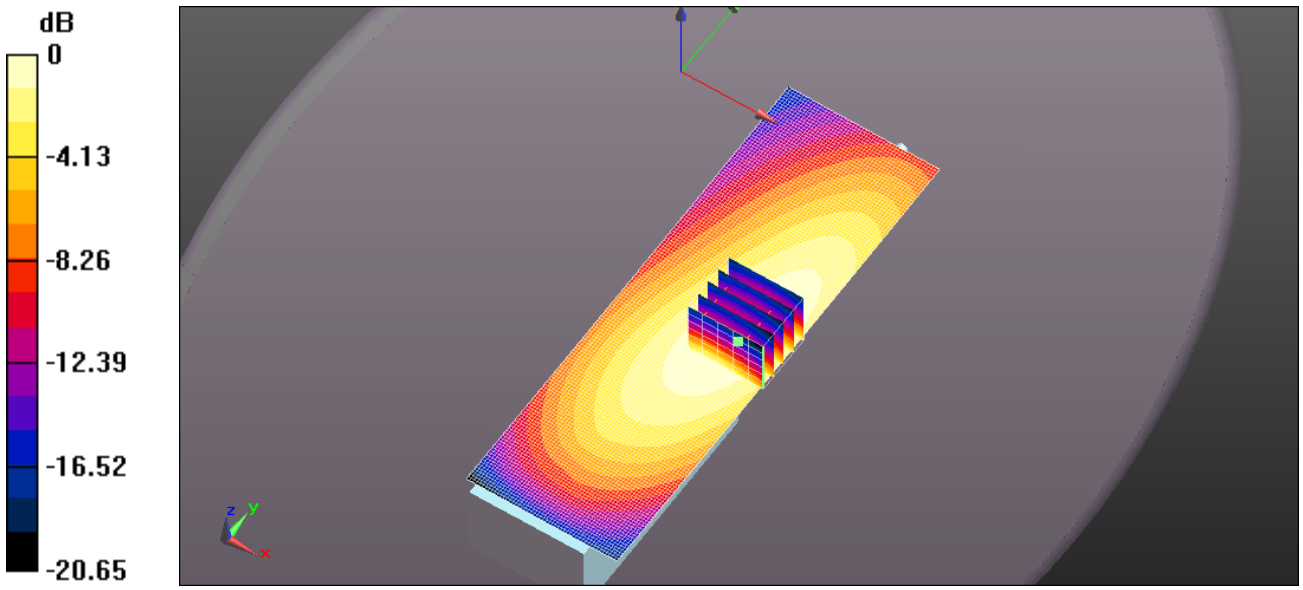

0 dB = 8.71 W/kg = 9.40 dBW/kg

Test Laboratory: Ultratech Group of Labs

FILE NAME: BP-278 SC61UC 142MM 460MHZ.DA52:0

DUT: DUT Sample Brick w. Antenna; Type: Sample; Serial: 00000220-0
Program Name: System Performance Check at 450 MHz

Communication System: UID 10000, CW; Frequency: 460 MHz;Duty Cycle: 1:1
Medium parameters used: f = 460 MHz; σ = 0.906 S/m; ε_r = 55.564; ρ = 1000 kg/m^3
Phantom section: Flat Section

DASY4 Configuration:
- Probe: EX3DV4 - SN3673; ConvF(9.11, 9.11, 9.11); Calibrated: 10/17/2014;
- Sensor-Surface: 1.4mm (Mechanical Surface Detection)
- Electronics: DAE4 Sn874; Calibrated: 3/24/2014
- Phantom: ELI 4.0; Type: QD OVA 001 BB; Serial: 1057
- ; SEMCAD X Version 14.6.10 (7331)

ICOM IC-F2000D 400-470 MHz Body/Body - Belt Clip Touching, d=0mm, Pin=4W (ES-Probe)/Area Scan (51x161x1): Interpolated grid: dx=1.500 mm, dy=1.500 mm
Maximum value of SAR (interpolated) = 9.45 W/kg

ICOM IC-F2000D 400-470 MHz Body/Body - Belt Clip Touching, d=0mm, Pin=4W (ES-Probe)/Zoom Scan (5x5x7) (7x6x7)/Cube 0: Measurement grid: dx=7.5mm, dy=7.5mm, dz=5mm
Reference Value = 95.06 V/m; Power Drift = -0.15 dB
Peak SAR (extrapolated) = 9.69 W/kg
SAR(1 g) = 6.06 W/kg; SAR(10 g) = 3.91 W/kg (SAR corrected for target medium)
Maximum value of SAR (measured) = 7.37 W/kg

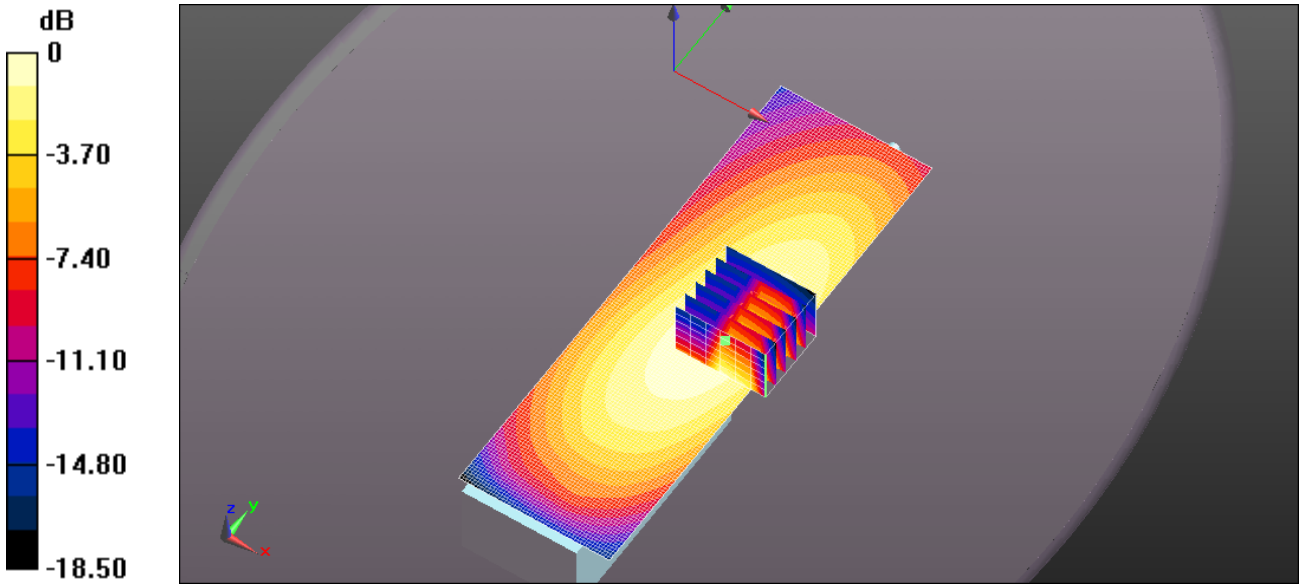

0 dB = 9.45 W/kg = 9.75 dBW/kg

Test Laboratory: Ultratech Group of Labs

FILE NAME: BP-278 SC61UC 148MM 460MHZ.DA52:0

DUT: DUT Sample Brick w. Antenna; Type: Sample; Serial: 00000220-0
Program Name: System Performance Check at 450 MHz

Communication System: UID 10000, CW; Frequency: 460 MHz;Duty Cycle: 1:1
Medium parameters used: f = 460 MHz; σ = 0.906 S/m; ε_r = 55.564; ρ = 1000 kg/m^3
Phantom section: Flat Section

DASY4 Configuration:
- Probe: EX3DV4 - SN3673; ConvF(9.11, 9.11, 9.11); Calibrated: 10/17/2014;
- Sensor-Surface: 1.4mm (Mechanical Surface Detection)
- Electronics: DAE4 Sn874; Calibrated: 3/24/2014
- Phantom: ELI 4.0; Type: QD OVA 001 BB; Serial: 1057
- ; SEMCAD X Version 14.6.10 (7331)

ICOM IC-F2000D 400-470 MHz Body/Body - Belt Clip Touching, d=0mm, Pin=4W (ES-Probe)/Area Scan (51x161x1): Interpolated grid: dx=1.500 mm, dy=1.500 mm
Maximum value of SAR (interpolated) = 10.2 W/kg

ICOM IC-F2000D 400-470 MHz Body/Body - Belt Clip Touching, d=0mm, Pin=4W (ES-Probe)/Zoom Scan (5x5x7) (6x5x7)/Cube 0: Measurement grid: dx=7.5mm, dy=7.5mm, dz=5mm
Reference Value = 96.30 V/m; Power Drift = -0.15 dB
Peak SAR (extrapolated) = 10.7 W/kg
SAR(1 g) = 7.44 W/kg; SAR(10 g) = 5.43 W/kg (SAR corrected for target medium)
Maximum value of SAR (measured) = 9.47 W/kg

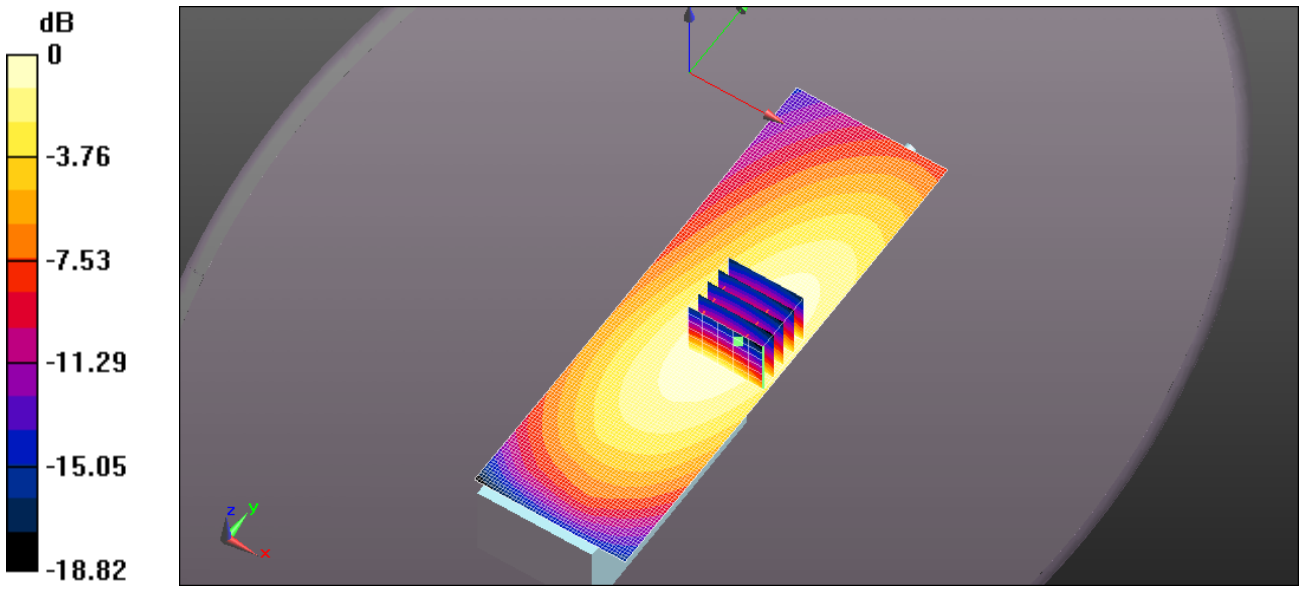

0 dB = 10.2 W/kg = 10.10 dBW/kg