APPENDIX 1

SAR Measurement Data

TABLE OF CONTENTS

EXHIBIT 1. HEAD SAR MEASUREMENT SUMMARY 3

FILE NAME: ICOM-409Q BP-280 SC72U 138MM 470MHZ.DA52:0 4
FILE NAME: ICOM-409Q BP-280 SC72U 138MM 500MHZ.DA52:0 5
FILE NAME: ICOM-409Q BP-279 SC72U 138MM 500MHZ.DA52:0 6
FILE NAME: ICOM-409Q BP-278 SC72U 138MM 500MHZ.DA52:0 7
FILE NAME: ICOM-409Q BP-280 SC57U 140MM 460MHZ.DA52:0 8
FILE NAME: ICOM-409Q BP-280 SC73US 60MM 450MHZ.DA52:0 9
FILE NAME: ICOM-409Q BP-280 SC73US 60MM 475.2MHZ.DA52:0 10
FILE NAME: ICOM-409Q BP-280 SC61UC 420MHZ 156MM 450MHZ.DA52:0 11
FILE NAME: ICOM-409Q BP-280 SC61UC 440MHZ 148MM 465MHZ.DA52:0 12
FILE NAME: ICOM-409Q BP-280 SC61UC 460MHZ 142MM 465MHZ.DA52:0 13
FILE NAME: ICOM-409Q BP-280 SC61UC 460MHZ 142MM 496MHZ.DA52:0 14
FILE NAME: ICOM-409Q BP-279 SC61UC 460MHZ 142MM 496MHZ.DA52:0 15
FILE NAME: ICOM-409Q BP-278 SC61UC 460MHZ 142MM 496MHZ.DA52:0 16
FILE NAME: ICOM-409Q BP-280 SC61UC 480MHZ 136MM 465MHZ.DA52:0 17
FILE NAME: ICOM-409Q BP-280 SC61UC 480MHZ 136MM 496MHZ.DA52:0 18
FILE NAME: ICOM-409Q BP-280 SC61UC 500MHZ 129MM 475.2MHZ.DA52:0 19
FILE NAME: ICOM-409Q BP-280 SC61UC 500MHZ 129MM 512MHZ.DA52:0 20
FILE NAME: ICOM-409Q BP-280 SC61UC 520MHZ 125MM 478.4MHZ.DA52:0 21
FILE NAME: ICOM-409Q BP-280 SC61UC 520MHZ 125MM 500MHZ.DA52:0 22

EXHIBIT 2. BODY SAR MEASUREMENT SUMMARY 23

FILE NAME: ICOM-409Q BP-280 SC72U 138MM 470MHZ.DA52:0 24
FILE NAME: ICOM-409Q BP-280 SC72U 138MM 484MHZ.DA52:0 25
FILE NAME: ICOM-409Q BP-280 SC72U 138MM 500MHZ.DA52:0 26
FILE NAME: ICOM-409Q BP-280 SC72U 138MM 512MHZ.DA52:0 27
FILE NAME: ICOM-409Q BP-279 SC72U 138MM 512MHZ.DA52:0 28
FILE NAME: ICOM-409Q BP-278 SC72U 138MM 512MHZ.DA52:0 29
FILE NAME: ICOM-409Q BP-280 SC57U 140MM 460MHZ.DA52:0 30
FILE NAME: ICOM-409Q BP-280 SC73US 60MM 450MHZ.DA52:0 31
FILE NAME: ICOM-409Q BP-280 SC73US 60MM 475.2MHZ.DA52:0 32
FILE NAME: ICOM-409Q BP-280 SC61UC 156MM 450MHZ.DA52:0 33
FILE NAME: ICOM-409Q BP-280 SC61UC 148MM 450MHZ.DA52:0 34
FILE NAME: ICOM-409Q BP-280 SC61UC 148MM 465MHZ.DA52:0 35
FILE NAME: ICOM-409Q BP-280 SC61UC 148MM 475.2MHZ.DA52:0 36
FILE NAME: ICOM-409Q BP-279 SC61UC 148MM 475.2MHZ.DA52:0 37
FILE NAME: ICOM-409Q BP-278 SC61UC 148MM 475.2MHZ.DA52:0 38
FILE NAME: ICOM-409Q BP-280 SC61UC 142MM 450MHZ.DA52:0 39
FILE NAME: ICOM-409Q BP-280 SC61UC 142MM 465MHZ.DA52:0 40
FILE NAME: ICOM-409Q BP-280 SC61UC 142MM 484MHZ.DA52:0 41
FILE NAME: ICOM-409Q BP-280 SC61UC 142MM 496MHZ.DA52:0 42
FILE NAME: ICOM-409Q BP-279 SC61UC 142MM 496MHZ.DA52:0 43
FILE NAME: ICOM-409Q BP-278 SC61UC 142MM 496MHZ.DA52:0 44
FILE NAME: ICOM-409Q BP-280 SC61UC 136MM 465MHZ.DA52:0 45
FILE NAME: ICOM-409Q BP-280 SC61UC 136MM 484MHZ.DA52:0 46
FILE NAME: ICOM-409Q BP-280 SC61UC 136MM 496MHZ.DA52:0 47
FILE NAME: ICOM-409Q BP-279 SC61UC 136MM 496MHZ.DA52:0 48
FILE NAME: ICOM-409Q BP-278 SC61UC 136MM 496MHZ.DA52:0 49
FILE NAME: ICOM-409Q BP-280 SC61UC 136MM 512MHZ.DA52:0 50
FILE NAME: ICOM-409Q BP-280 SC61UC 129MM 475.2MHZ.DA52:0 51
FILE NAME: ICOM-409Q BP-280 SC61UC 129MM 496MHZ.DA52:0 52
FILE NAME: ICOM-409Q BP-280 SC61UC 129MM 512MHZ.DA52:0 53
FILE NAME: ICOM-409Q BP-279 SC61UC 129MM 512MHZ.DA52:0 54
FILE NAME: ICOM-409Q BP-278 SC61UC 129MM 512MHZ.DA52:0 55
FILE NAME: ICOM-409Q BP-280 SC61UC 125MM 478.4MHZ.DA52:0 56
FILE NAME: ICOM-409Q BP-280 SC61UC 125MM 500MHZ.DA52:0 57

EXHIBIT 1. HEAD SAR MEASUREMENT SUMMARY

Antenna	Power (dBm)	CH	CH. Freq	Measured HEAD SAR 1g (W/Kg)		
				BP-278	BP-279	BP-280
			(MHz)	1130maH	1485mAh	2280mAh
FA-SC72U 470-520 MHz Blue Tip 138mm	36.25	4	470			2.47
	36.22	7	484			
	36.24	10	500	4.96	4.67	5.26
	36.24	11	512			
FA-SC57U 430-470 MHz Red Tip 140mm	36.15	1	450			
	36.21	2	460			2.97
	36.25	4	470			
FA-SC73US 450-490 MHz Red Tip 60mm	36.15	1	450			1.15
	36.24	3	465			
	36.25	5	475.2			3.12
	36.22	8	490			
Cut Antenna 380-520MHz						
SC61UC 420MHz White Tip 156 mm	36.15	1	450			4.33
SC61UC 440MHz White Tip 148mm	36.15	1	450			
	36.24	3	465			4.11
	36.25	5	475.2			
SC61UC 460MHz White Tip 142mm	36.15	1	450			
	36.24	3	465			3.45
	36.22	7	484			
	36.23	9	496	5.62	5.10	6.29
SC61UC 480MHz White Tip 136mm	36.15	1	450			
	36.24	3	465			2.49
	36.22	7	484			
	36.23	9	496			5.94
	36.24	11	512			
SC61UC 500MHz White Tip 129mm	36.21	2	460			
	36.25	5	475.2			1.85
	36.23	9	496			
	36.24	11	512			6.00
SC61UC 520MHz White Tip 125mm	36.23	6	478.4			1.60
	36.22	8	490			
	36.24	10	500			3.08
	36.24	11	512			

Test Laboratory: Ultratech Group of Labs

FILE NAME: ICOM-409Q BP-280 SC72U 138MM 470MHZ.DA52:0

DUT: Icom IC-F2000D; Type: 450-512 MHz PTT; Serial: 00000525-0
Program Name: System Performance Check at 450 MHz

Communication System: UID 10000, CW; Frequency: 470 MHz; Duty Cycle: 1:1
Medium parameters used: f = 470 MHz; σ = 0.932 S/m; ε_r = 44.303; ρ = 1000 kg/m^3
Phantom section: Flat Section

DASY4 Configuration:
- Probe: EX3DV4 - SN3673; ConvF(10.3, 10.3, 10.3); Calibrated: 8/24/2015;
- Sensor-Surface: 1.4mm (Mechanical Surface Detection)
- Electronics: DAE4 Sn874; Calibrated: 8/24/2015
- Phantom: ELI 4.0; Type: QD OVA 001 BB; Serial: 1057
- ; SEMCAD X Version 14.6.10 (7331)

ICOM IC-F2000D 450-512 MHz Head 4W/Head Frontal, d=25mm, Pin=4W (EX-Probe)/Area Scan (51x161x1): Interpolated grid: dx=1.500 mm, dy=1.500 mm
Maximum value of SAR (interpolated) = 3.16 W/kg

ICOM IC-F2000D 450-512 MHz Head 4W/Head Frontal, d=25mm, Pin=4W (EX-Probe)/Zoom Scan (5x5x7) (6x5x7)/Cube 0: Measurement grid: dx=7.5mm, dy=7.5mm, dz=5mm
Reference Value = 53.72 V/m; Power Drift = 0.01 dB
Peak SAR (extrapolated) = 3.51 W/kg
SAR(1 g) = 2.47 W/kg; SAR(10 g) = 1.8 W/kg (SAR corrected for target medium)
Maximum value of SAR (measured) = 3.11 W/kg

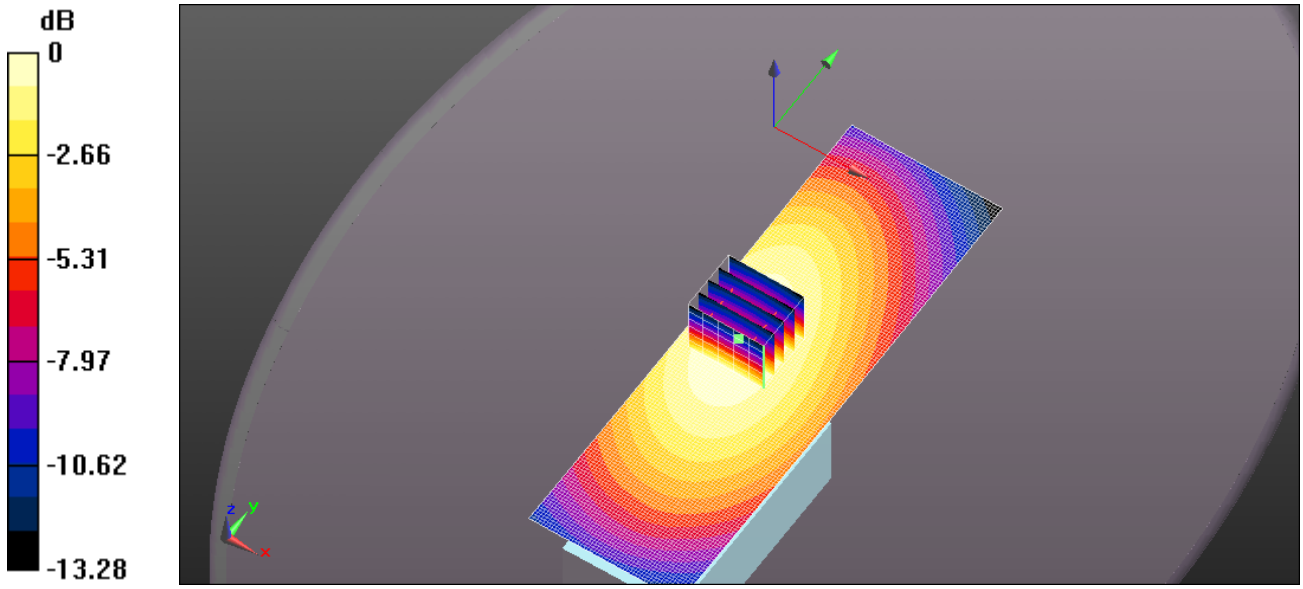

0 dB = 3.16 W/kg = 5.00 dBW/kg

Test Laboratory: Ultratech Group of Labs

FILE NAME: ICOM-409Q BP-280 SC72U 138MM 500MHZ.DA52:0

DUT: Icom IC-F2000D; Type: 450-512 MHz PTT; Serial: 00000525-0
Program Name: System Performance Check at 450 MHz

Communication System: UID 0, CW (0); Frequency: 500 MHz;Duty Cycle: 1:1
Medium parameters used: f = 500 MHz; σ = 0.964 S/m; ε_r = 43.688; ρ = 1000 kg/m^3
Phantom section: Flat Section

DASY4 Configuration:
- Probe: EX3DV4 - SN3673; ConvF(10.3, 10.3, 10.3); Calibrated: 8/24/2015;
- Sensor-Surface: 1.4mm (Mechanical Surface Detection)
- Electronics: DAE4 Sn874; Calibrated: 8/24/2015
- Phantom: ELI 4.0; Type: QD OVA 001 BB; Serial: 1057
- ; SEMCAD X Version 14.6.10 (7331)

ICOM IC-F2000D 450-512 MHz Head 4W/Head Frontal, d=25mm, Pin=4W (EX-Probe)/Area Scan (41x161x1): Interpolated grid: dx=1.500 mm, dy=1.500 mm
Maximum value of SAR (interpolated) = 7.38 W/kg

ICOM IC-F2000D 450-512 MHz Head 4W/Head Frontal, d=25mm, Pin=4W (EX-Probe)/Zoom Scan (5x5x7) (6x5x7)/Cube 0: Measurement grid: dx=7.5mm, dy=7.5mm, dz=5mm
Reference Value = 87.28 V/m; Power Drift = -0.1 dB Peak SAR (extrapolated) = 8.09 W/kg
SAR(1 g) = 5.26 W/kg; SAR(10 g) = 3.86 W/kg (SAR corrected for target medium)
Maximum value of SAR (measured) = 7.21 W/kg

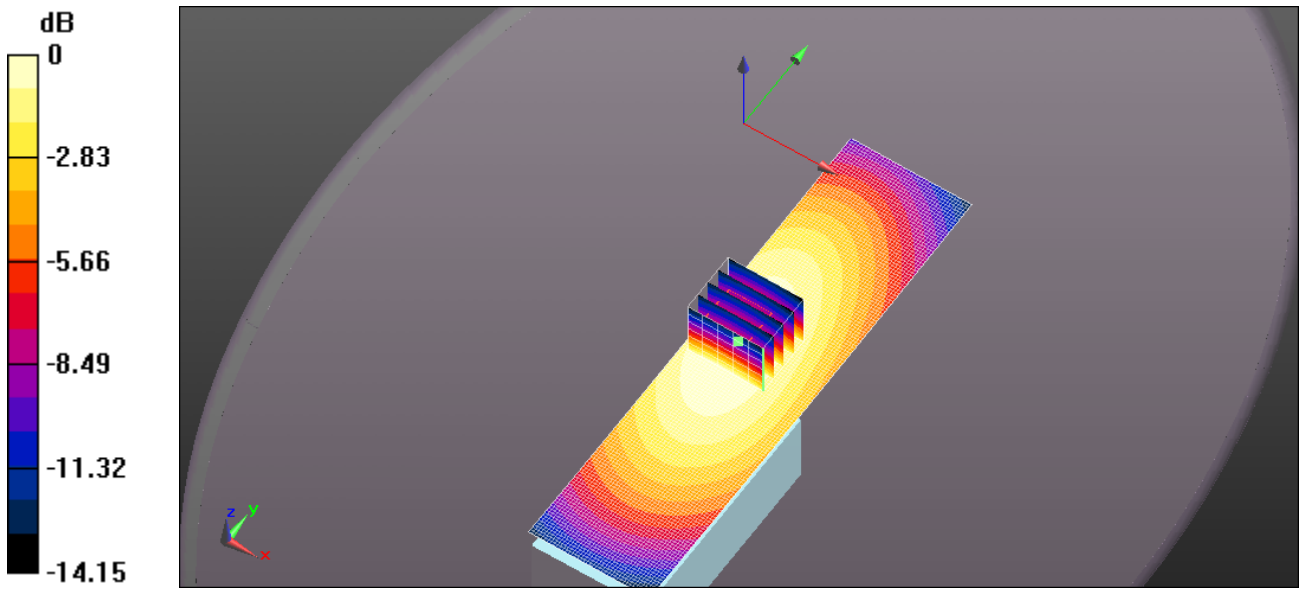

0 dB = 7.38 W/kg = 8.68 dBW/kg

Test Laboratory: Ultratech Group of Labs

FILE NAME: ICOM-409Q BP-279 SC72U 138MM 500MHZ.DA52:0

DUT: Icom IC-F2000D ; Type: 450-512 MHz PTT; Serial: 00000525-0
Program Name: System Performance Check at 450 MHz

Communication System: UID 0, CW (0); Frequency: 500 MHz;Duty Cycle: 1:1
Medium parameters used: f = 500 MHz; σ = 0.964 S/m; ε_r = 43.688; ρ = 1000 kg/m^3
Phantom section: Flat Section

DASY4 Configuration:
- Probe: EX3DV4 - SN3673; ConvF(10.3, 10.3, 10.3); Calibrated: 8/24/2015;
- Sensor-Surface: 1.4mm (Mechanical Surface Detection)
- Electronics: DAE4 Sn874; Calibrated: 8/24/2015
- Phantom: ELI 4.0; Type: QD OVA 001 BB; Serial: 1057
- ; SEMCAD X Version 14.6.10 (7331)

ICOM IC-F2000D 450-512 MHz Head 4W/Head Frontal, d=25mm, Pin=4W (EX-Probe)/Area Scan (41x161x1): Interpolated grid: dx=1.500 mm, dy=1.500 mm
Maximum value of SAR (interpolated) = 6.32 W/kg

ICOM IC-F2000D 450-512 MHz Head 4W/Head Frontal, d=25mm, Pin=4W (EX-Probe)/Zoom Scan (5x5x7) (6x5x7)/Cube 0: Measurement grid: dx=7.5mm, dy=7.5mm, dz=5mm
Reference Value = 25.39 V/m; Power Drift = -0.06 dB
Peak SAR (extrapolated) = 7.19 W/kg
SAR(1 g) = 4.67 W/kg; SAR(10 g) = 3.44 W/kg (SAR corrected for target medium)
Maximum value of SAR (measured) = 6.40 W/kg

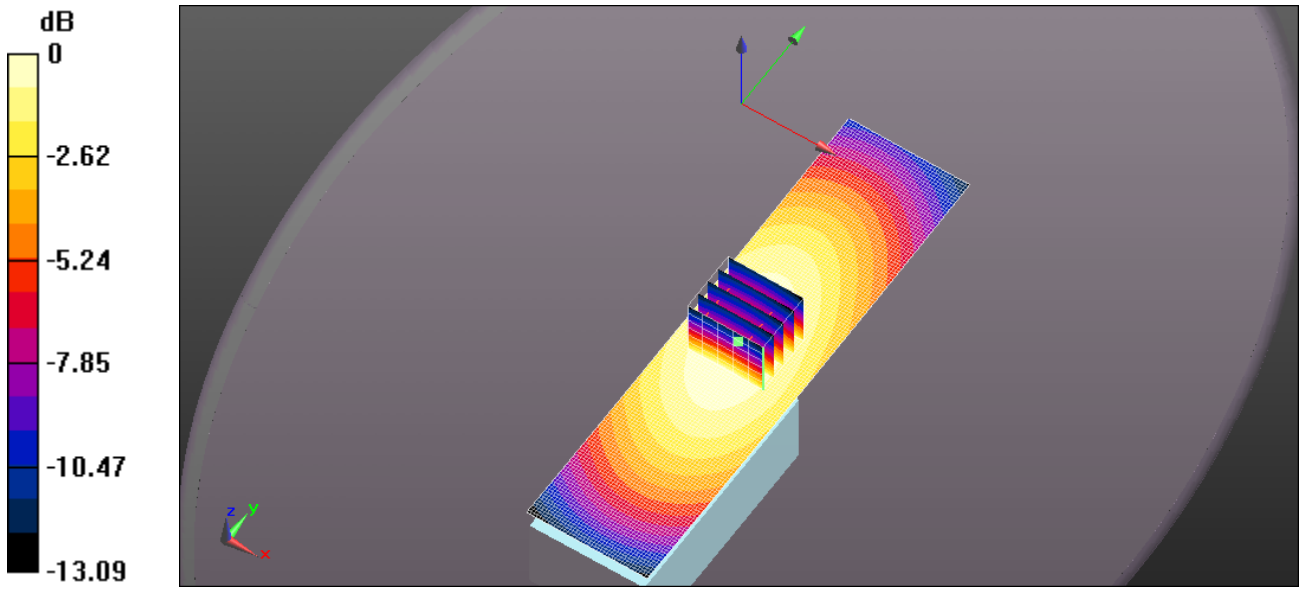

0 dB = 6.32 W/kg = 8.01 dBW/kg

Test Laboratory: Ultratech Group of Labs

FILE NAME: ICOM-409Q BP-278 SC72U 138MM 500MHZ.DA52:0

DUT: Icom IC-F2000D ; Type: 450-512 MHz PTT; Serial: 00000525-0
Program Name: System Performance Check at 450 MHz

Communication System: UID 0, CW (0); Frequency: 500 MHz;Duty Cycle: 1:1
Medium parameters used: f = 500 MHz; σ = 0.964 S/m; ε_r = 43.688; ρ = 1000 kg/m^3
Phantom section: Flat Section

DASY4 Configuration:
- Probe: EX3DV4 - SN3673; ConvF(10.3, 10.3, 10.3); Calibrated: 8/24/2015;
- Sensor-Surface: 1.4mm (Mechanical Surface Detection)
- Electronics: DAE4 Sn874; Calibrated: 8/24/2015
- Phantom: ELI 4.0; Type: QD OVA 001 BB; Serial: 1057
- ; SEMCAD X Version 14.6.10 (7331)

ICOM IC-F2000D 450-512 MHz Head 4W/Head Frontal, d=25mm, Pin=4W (EX-Probe)/Area Scan (41x161x1): Interpolated grid: dx=1.500 mm, dy=1.500 mm
Maximum value of SAR (interpolated) = 6.79 W/kg

ICOM IC-F2000D 450-512 MHz Head 4W/Head Frontal, d=25mm, Pin=4W (EX-Probe)/Zoom Scan (5x5x7) (6x5x7)/Cube 0: Measurement grid: dx=7.5mm, dy=7.5mm, dz=5mm
Reference Value = 25.98 V/m; Power Drift = -0.05 dB
Peak SAR (extrapolated) = 7.67 W/kg
SAR(1 g) = 4.96 W/kg; SAR(10 g) = 3.64 W/kg (SAR corrected for target medium)
Maximum value of SAR (measured) = 6.82 W/kg

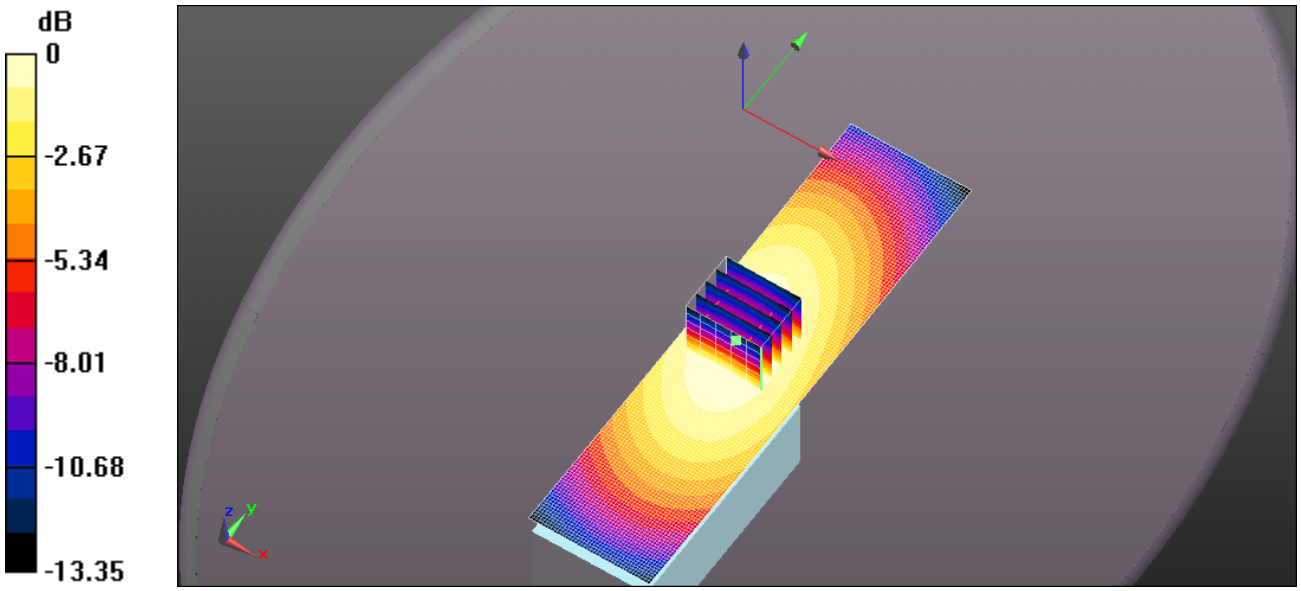

0 dB = 6.79 W/kg = 8.32 dBW/kg

Test Laboratory: Ultratech Group of Labs

FILE NAME: ICOM-409Q BP-280 SC57U 140MM 460MHZ.DA52:0

DUT: Icom IC-F2000D ; Type: 450-512 MHz PTT; Serial: 00000525-0
Program Name: System Performance Check at 450 MHz

Communication System: UID 0, CW (0); Frequency: 460 MHz;Duty Cycle: 1:1
Medium parameters used: f = 460 MHz; σ = 0.922 S/m; ε_r = 44.681; ρ = 1000 kg/m^3
Phantom section: Flat Section

DASY4 Configuration:
- Probe: EX3DV4 - SN3673; ConvF(10.3, 10.3, 10.3); Calibrated: 8/24/2015;
- Sensor-Surface: 1.4mm (Mechanical Surface Detection)
- Electronics: DAE4 Sn874; Calibrated: 8/24/2015
- Phantom: ELI 4.0; Type: QD OVA 001 BB; Serial: 1057
- ; SEMCAD X Version 14.6.10 (7331)

ICOM IC-F2000D 450-512 MHz Head 4W/Head Frontal, d=25mm, Pin=4W (EX-Probe)/Area Scan (41x161x1): Interpolated grid: dx=1.500 mm, dy=1.500 mm
Maximum value of SAR (interpolated) = 3.92 W/kg

ICOM IC-F2000D 450-512 MHz Head 4W/Head Frontal, d=25mm, Pin=4W (EX-Probe)/Zoom Scan (5x5x7) (6x5x7)/Cube 0: Measurement grid: dx=7.5mm, dy=7.5mm, dz=5mm
Reference Value = 66.63 V/m; Power Drift = -0.18 dB
Peak SAR (extrapolated) = 4.39 W/kg
SAR(1 g) = 2.97 W/kg; SAR(10 g) = 2.18 W/kg (SAR corrected for target medium)
Maximum value of SAR (measured) = 3.91 W/kg

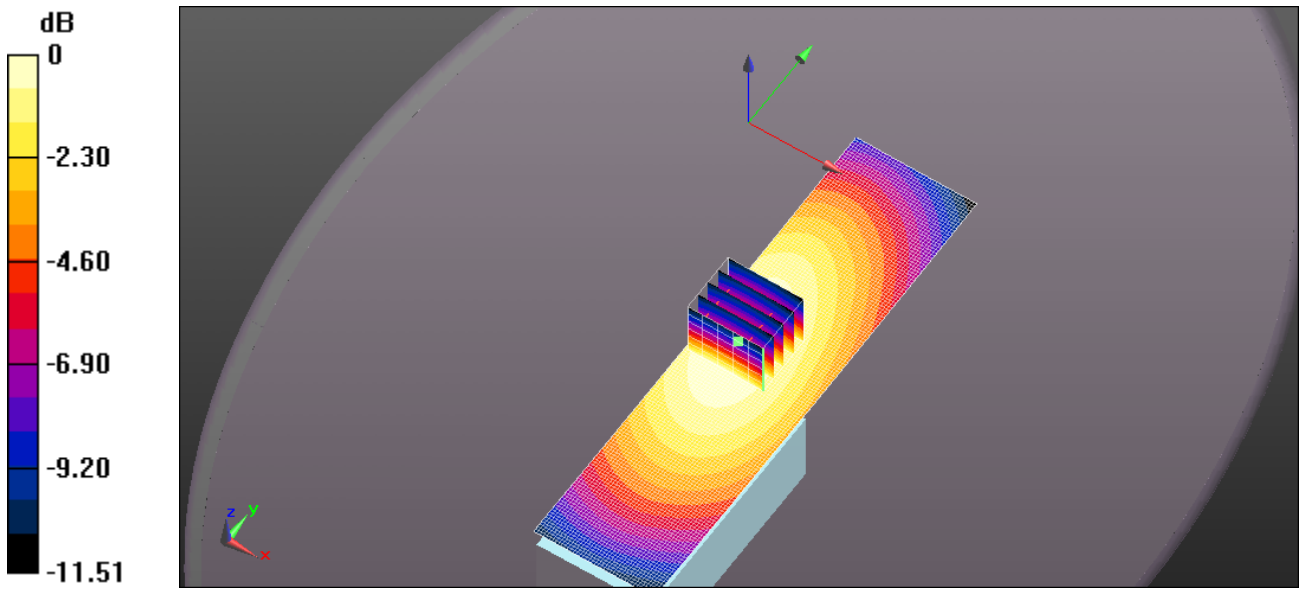

0 dB = 3.92 W/kg = 5.94 dBW/kg

Test Laboratory: Ultratech Group of Labs

FILE NAME: ICOM-409Q BP-280 SC73US 60MM 450MHZ.DA52:0

DUT: Icom IC-F2000D ; Type: 450-512 MHz PTT; Serial: 00000525-0
Program Name: System Performance Check at 450 MHz

Communication System: UID 0, CW (0); Frequency: 450 MHz;Duty Cycle: 1:1
Medium parameters used: f = 450 MHz; σ = 0.922 S/m; ε_r = 44.681; ρ = 1000 kg/m^3
Phantom section: Flat Section

DASY4 Configuration:
- Probe: EX3DV4 - SN3673; ConvF(10.3, 10.3, 10.3); Calibrated: 8/24/2015;
- Sensor-Surface: 1.4mm (Mechanical Surface Detection)
- Electronics: DAE4 Sn874; Calibrated: 8/24/2015
- Phantom: ELI 4.0; Type: QD OVA 001 BB; Serial: 1057
- ; SEMCAD X Version 14.6.10 (7331)

ICOM IC-F2000D 450-512 MHz Head 4W/Head Frontal, d=25mm, Pin=4W (EX-Probe)/Area Scan (41x161x1): Interpolated grid: dx=1.500 mm, dy=1.500 mm
Maximum value of SAR (interpolated) = 1.52 W/kg

ICOM IC-F2000D 450-512 MHz Head 4W/Head Frontal, d=25mm, Pin=4W (EX-Probe)/Zoom Scan (5x5x7) (6x5x7)/Cube 0: Measurement grid: dx=7.5mm, dy=7.5mm, dz=5mm
Reference Value = 4.807 V/m; Power Drift = 0.09 dB
Peak SAR (extrapolated) = 1.71 W/kg
SAR(1 g) = 1.15 W/kg; SAR(10 g) = 0.850 W/kg (SAR corrected for target medium)
Maximum value of SAR (measured) = 1.52 W/kg

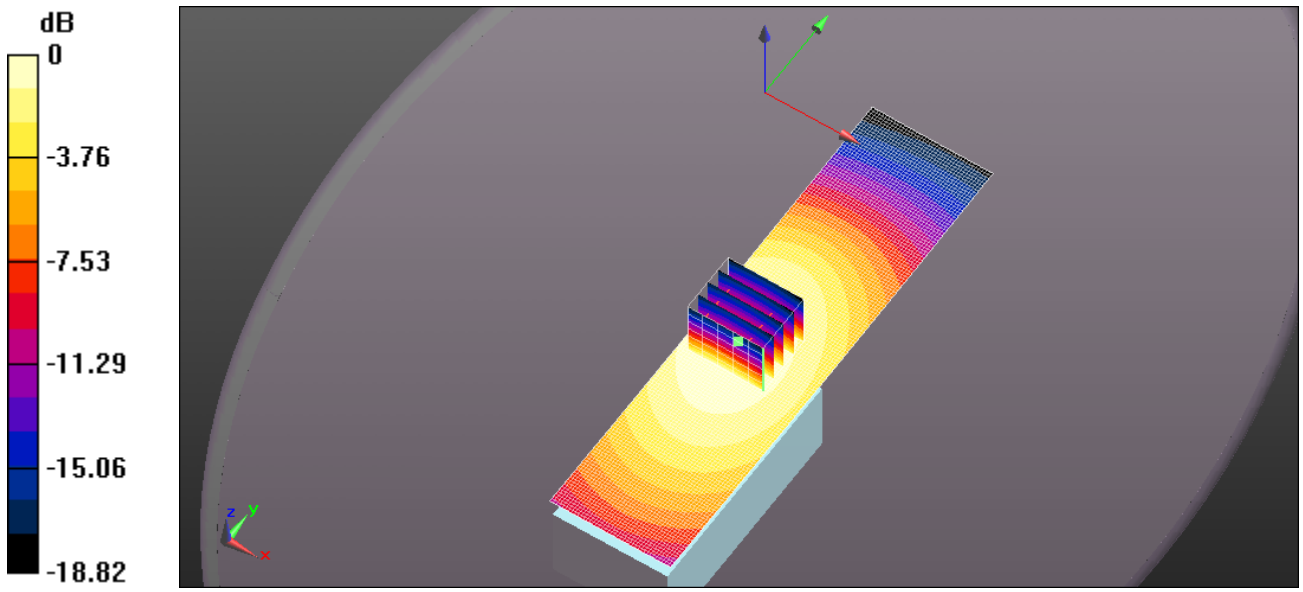

0 dB = 1.52 W/kg = 1.81 dBW/kg

Test Laboratory: Ultratech Group of Labs

FILE NAME: ICOM-409Q BP-280 SC73US 60MM 475.2MHZ.DA52:0

DUT: Icom IC-F2000D ; Type: 450-512 MHz PTT; Serial: 00000525-0
Program Name: System Performance Check at 450 MHz

Communication System: UID 0, CW (0); Frequency: 475.2 MHz;Duty Cycle: 1:1
Medium parameters used (interpolated): f = 475.2 MHz; σ = 0.939 S/m; ε_r = 44.235; ρ = 1000 kg/m^3
Phantom section: Flat Section

DASY4 Configuration:
- Probe: EX3DV4 - SN3673; ConvF(10.3, 10.3, 10.3); Calibrated: 8/24/2015;
- Sensor-Surface: 1.4mm (Mechanical Surface Detection)
- Electronics: DAE4 Sn874; Calibrated: 8/24/2015
- Phantom: ELI 4.0; Type: QD OVA 001 BB; Serial: 1057
- ; SEMCAD X Version 14.6.10 (7331)

ICOM IC-F2000D 450-512 MHz Head 4W/Head Frontal, d=25mm, Pin=4W (EX-Probe)/Area Scan (41x161x1): Interpolated grid: dx=1.500 mm, dy=1.500 mm

ICOM IC-F2000D 450-512 MHz Head 4W/Head Frontal, d=25mm, Pin=4W (EX-Probe)/Zoom Scan (5x5x7) (6x5x7)/Cube 0: Measurement grid: dx=7.5mm, dy=7.5mm, dz=5mm
Reference Value = 5.128 V/m; Power Drift = 0.02 dB
Peak SAR (extrapolated) = 4.75 W/kg
SAR(1 g) = 3.12 W/kg; SAR(10 g) = 2.27 W/kg (SAR corrected for target medium)
Maximum value of SAR (measured) = 4.22 W/kg

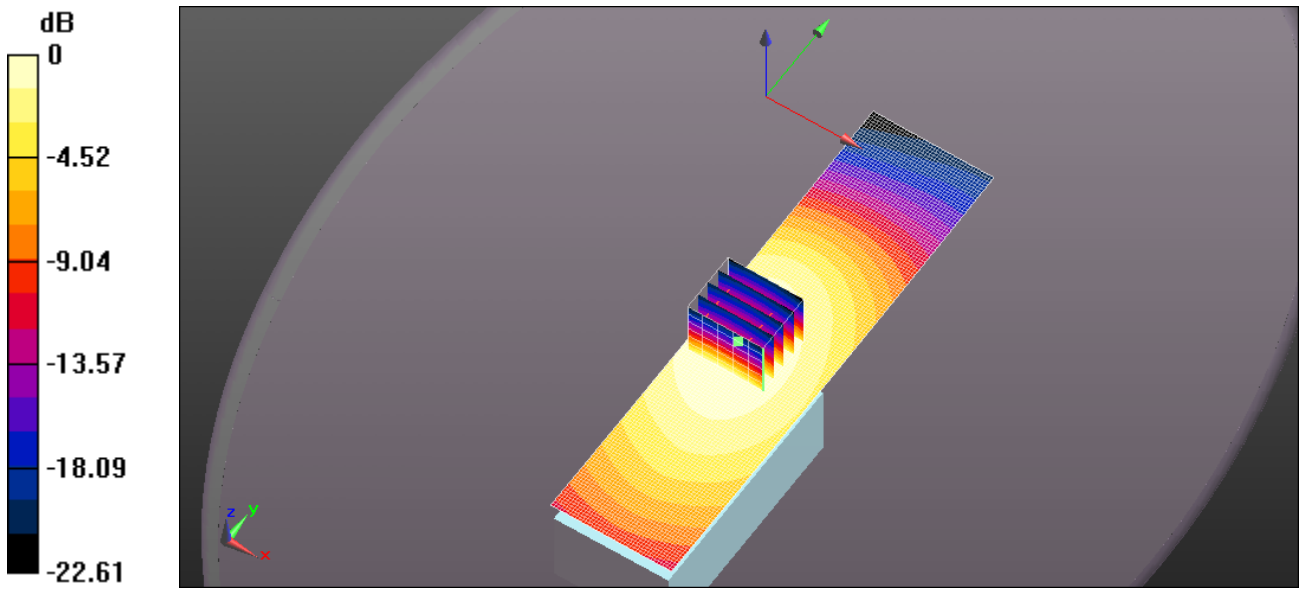

0 dB = 4.20 W/kg = 6.23 dBW/kg

Test Laboratory: Ultratech Group of Labs

FILE NAME: ICOM-409Q BP-280 SC61UC 420MHZ 156MM 450MHZ.DA52:0

DUT: Icom IC-F2000D ; Type: 450-512 MHz PTT; Serial: 00000525-0
Program Name: System Performance Check at 450 MHz

Communication System: UID 0, CW (0); Frequency: 450 MHz; Duty Cycle: 1:1
Medium parameters used: f = 450 MHz; σ = 0.91 S/m; ε_r = 44.88; ρ = 1000 kg/m^3
Phantom section: Flat Section

DASY4 Configuration:
- Probe: EX3DV4 - SN3673; ConvF(10.3, 10.3, 10.3); Calibrated: 8/24/2015;
- Sensor-Surface: 1.4mm (Mechanical Surface Detection)
- Electronics: DAE4 Sn874; Calibrated: 8/24/2015
- Phantom: ELI 4.0; Type: QD OVA 001 BB; Serial: 1057
- ; SEMCAD X Version 14.6.10 (7331)

ICOM IC-F2000D 450-512 MHz Head 4W/Head Frontal, d=25mm, Pin=4W (EX-Probe)/Area Scan (41x161x1): Interpolated grid: dx=1.500 mm, dy=1.500 mm
Maximum value of SAR (interpolated) = 5.62 W/kg

ICOM IC-F2000D 450-512 MHz Head 4W/Head Frontal, d=25mm, Pin=4W (EX-Probe)/Zoom Scan (5x5x7) (6x5x7)/Cube 0: Measurement grid: dx=7.5mm, dy=7.5mm, dz=5mm
Reference Value = 38.80 V/m; Power Drift = -0.02 dB
Peak SAR (extrapolated) = 6.28 W/kg
SAR(1 g) = 4.33 W/kg; SAR(10 g) = 3.21 W/kg (SAR corrected for target medium)
Maximum value of SAR (measured) = 5.59 W/kg

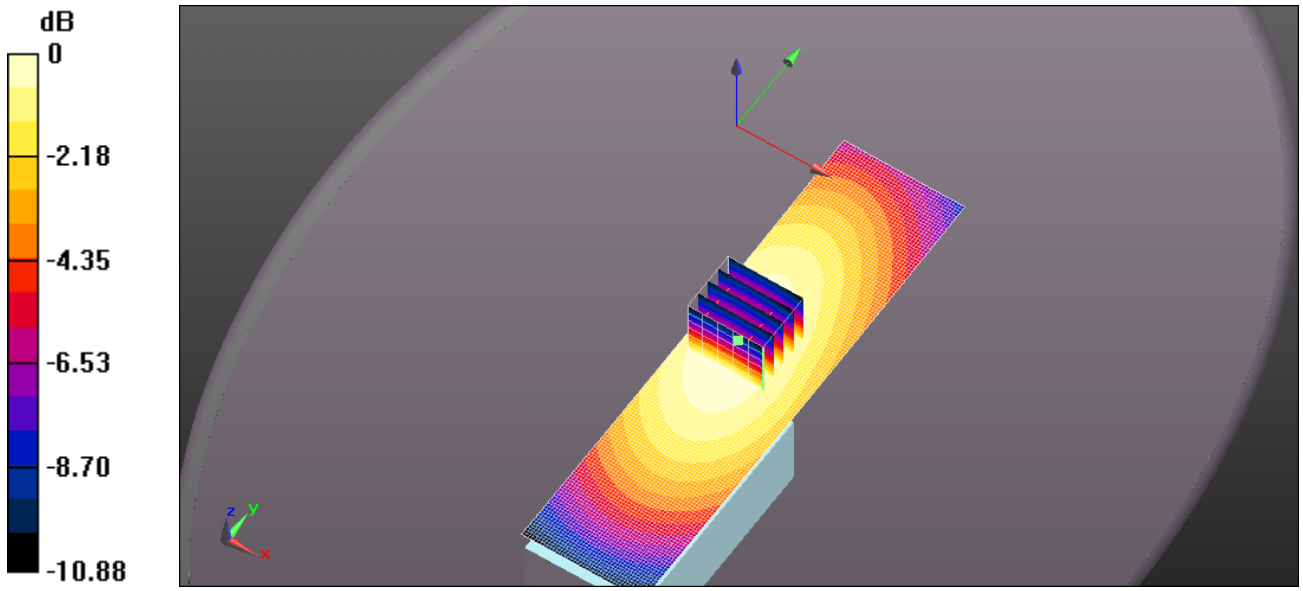

0 dB = 5.62 W/kg = 7.50 dBW/kg

Test Laboratory: Ultratech Group of Labs

FILE NAME: ICOM-409Q BP-280 SC61UC 440MHZ 148MM 465MHZ.DA52:0

DUT: Icom IC-F2000D; Type: 450-512 MHz PTT; Serial: 00000525-0
Program Name: System Performance Check at 450 MHz

Communication System: UID 0, CW (0); Frequency: 465 MHz; Duty Cycle: 1:1
Medium parameters used: f = 465 MHz; σ = 0.926 S/m; ε_r = 44.542; ρ = 1000 kg/m^3
Phantom section: Flat Section

DASY4 Configuration:
- Probe: EX3DV4 - SN3673; ConvF(10.3, 10.3, 10.3); Calibrated: 8/24/2015;
- Sensor-Surface: 1.4mm (Mechanical Surface Detection)
- Electronics: DAE4 Sn874; Calibrated: 8/24/2015
- Phantom: ELI 4.0; Type: QD OVA 001 BB; Serial: 1057
- ; SEMCAD X Version 14.6.10 (7331)

ICOM IC-F2000D 450-512 MHz Head 4W/Head Frontal, d=25mm, Pin=4W (EX-Probe)/Area Scan (41x161x1): Interpolated grid: dx=1.500 mm, dy=1.500 mm
Maximum value of SAR (interpolated) = 5.47 W/kg

ICOM IC-F2000D 450-512 MHz Head 4W/Head Frontal, d=25mm, Pin=4W (EX-Probe)/Zoom Scan (5x5x7) (6x5x7)/Cube 0: Measurement grid: dx=7.5mm, dy=7.5mm, dz=5mm
Reference Value = 34.94 V/m; Power Drift = -0.05 dB
Peak SAR (extrapolated) = 6.12 W/kg
SAR(1 g) = 4.11 W/kg; SAR(10 g) = 3.02 W/kg (SAR corrected for target medium)
Maximum value of SAR (measured) = 5.47 W/kg

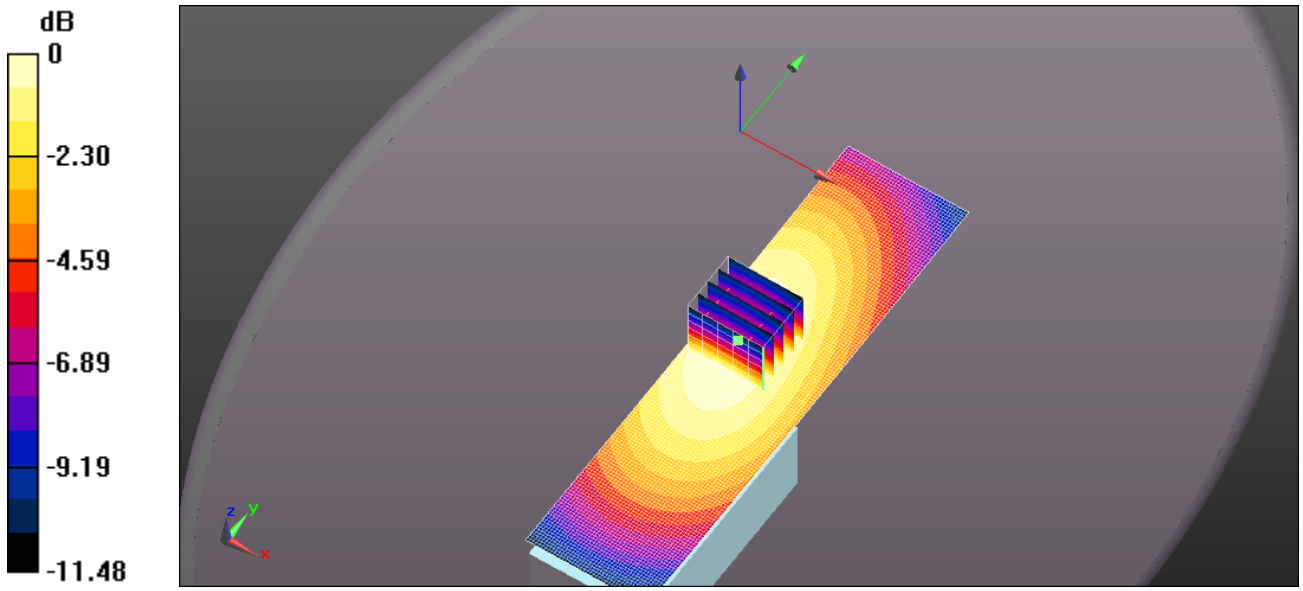

0 dB = 5.47 W/kg = 7.38 dBW/kg

Test Laboratory: Ultratech Group of Labs

FILE NAME: ICOM-409Q BP-280 SC61UC 460MHZ 142MM 465MHZ.DA52:0

DUT: Icom IC-F2000D ; Type: 450-512 MHz PTT; Serial: 00000525-0
Program Name: System Performance Check at 450 MHz

Communication System: UID 0, CW (0); Frequency: 465 MHz;Duty Cycle: 1:1
Medium parameters used: f = 465 MHz; σ = 0.926 S/m; ε_r = 44.542; ρ = 1000 kg/m^3
Phantom section: Flat Section

DASY4 Configuration:
- Probe: EX3DV4 - SN3673; ConvF(10.3, 10.3, 10.3); Calibrated: 8/24/2015;
- Sensor-Surface: 1.4mm (Mechanical Surface Detection)
- Electronics: DAE4 Sn874; Calibrated: 8/24/2015
- Phantom: ELI 4.0; Type: QD OVA 001 BB; Serial: 1057
- ; SEMCAD X Version 14.6.10 (7331)

ICOM IC-F2000D 450-512 MHz Head 4W/Head Frontal, d=25mm, Pin=4W (EX-Probe)/Area Scan (41x161x1): Interpolated grid: dx=1.500 mm, dy=1.500 mm
Maximum value of SAR (interpolated) = 4.57 W/kg

ICOM IC-F2000D 450-512 MHz Head 4W/Head Frontal, d=25mm, Pin=4W (EX-Probe)/Zoom Scan (5x5x7) (6x5x7)/Cube 0: Measurement grid: dx=7.5mm, dy=7.5mm, dz=5mm
Reference Value = 27.32 V/m; Power Drift = -0.04 dB
Peak SAR (extrapolated) = 5.14 W/kg
SAR(1 g) = 3.45 W/kg; SAR(10 g) = 2.53 W/kg (SAR corrected for target medium)
Maximum value of SAR (measured) = 4.58 W/kg

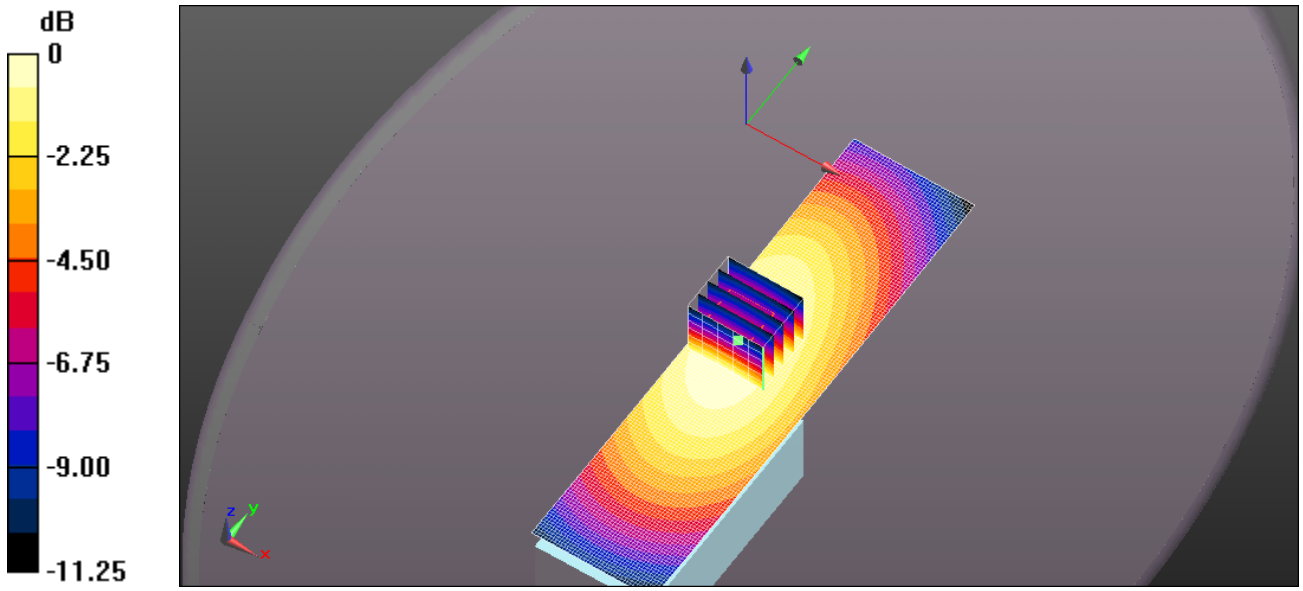

0 dB = 4.57 W/kg = 6.60 dBW/kg

Test Laboratory: Ultratech Group of Labs

FILE NAME: ICOM-409Q BP-280 SC61UC 460MHZ 142MM 496MHZ.DA52:0

DUT: Icom IC-F2000D ; Type: 450-512 MHz PTT; Serial: 00000525-0
Program Name: System Performance Check at 450 MHz

Communication System: UID 0, CW (0); Frequency: 496 MHz;Duty Cycle: 1:1
Medium parameters used (interpolated): f = 496 MHz; σ = 0.961 S/m; ε_r = 43.8; ρ = 1000 kg/m^3
Phantom section: Flat Section

DASY4 Configuration:
- Probe: EX3DV4 - SN3673; ConvF(10.3, 10.3, 10.3); Calibrated: 8/24/2015;
- Sensor-Surface: 1.4mm (Mechanical Surface Detection)
- Electronics: DAE4 Sn874; Calibrated: 8/24/2015
- Phantom: ELI 4.0; Type: QD OVA 001 BB; Serial: 1057
- ; SEMCAD X Version 14.6.10 (7331)

ICOM IC-F2000D 450-512 MHz Head 4W/Head Frontal, d=25mm, Pin=4W (EX-Probe)/Area Scan (41x161x1): Interpolated grid: dx=1.500 mm, dy=1.500 mm

ICOM IC-F2000D 450-512 MHz Head 4W/Head Frontal, d=25mm, Pin=4W (EX-Probe)/Zoom Scan (5x5x7) (6x5x7)/Cube 0: Measurement grid: dx=7.5mm, dy=7.5mm, dz=5mm
Reference Value = 36.00 V/m; Power Drift = -0.11 dB
Peak SAR (extrapolated) = 9.63 W/kg
SAR(1 g) = 6.29 W/kg; SAR(10 g) = 4.64 W/kg (SAR corrected for target medium)

Maximum value of SAR (measured) = 8.60 W/kg

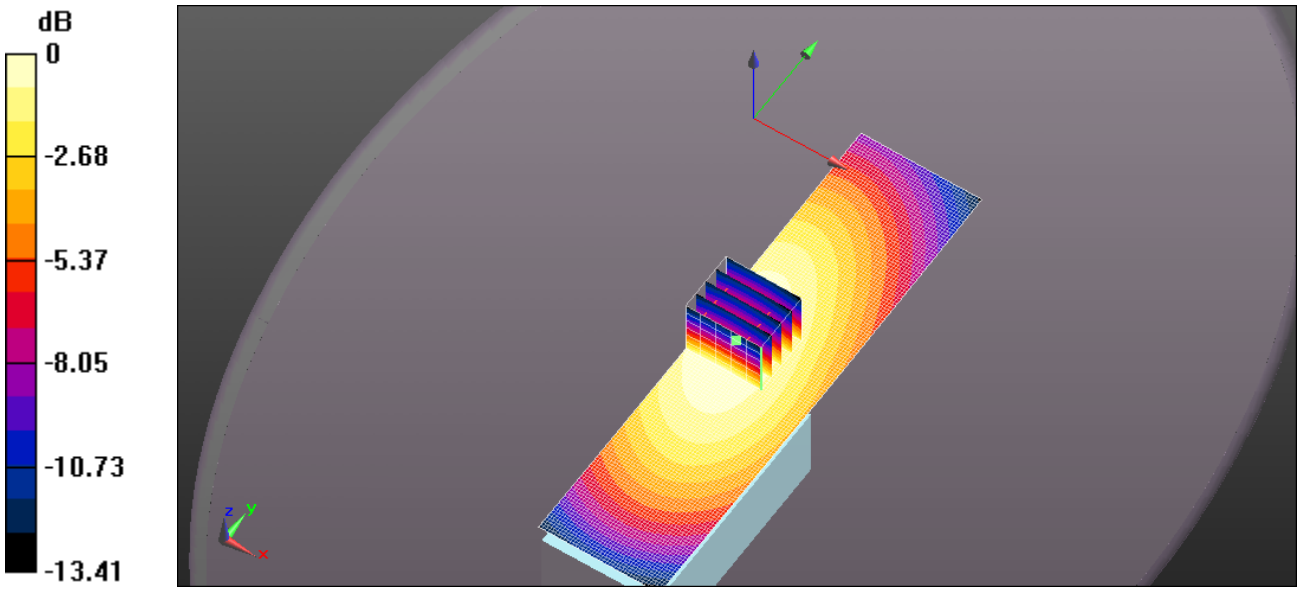

0 dB = 8.77 W/kg = 9.43 dBW/kg

Test Laboratory: Ultratech Group of Labs

FILE NAME: ICOM-409Q BP-279 SC61UC 460MHZ 142MM 496MHZ.DA52:0

DUT: Icom IC-F2000D; Type: 450-512 MHz PTT; Serial: 00000525-0
Program Name: System Performance Check at 450 MHz

Communication System: UID 0, CW (0); Frequency: 496 MHz; Duty Cycle: 1:1
Medium parameters used (interpolated): f = 496 MHz; σ = 0.961 S/m; ε_r = 43.8; ρ = 1000 kg/m^3
Phantom section: Flat Section

DASY4 Configuration:
- Probe: EX3DV4 - SN3673; ConvF(10.3, 10.3, 10.3); Calibrated: 8/24/2015;
- Sensor-Surface: 1.4mm (Mechanical Surface Detection)
- Electronics: DAE4 Sn874; Calibrated: 8/24/2015
- Phantom: ELI 4.0; Type: QD OVA 001 BB; Serial: 1057
- ; SEMCAD X Version 14.6.10 (7331)

ICOM IC-F2000D 450-512 MHz Head 4W/Head Frontal, d=25mm, Pin=4W (EX-Probe)/Area Scan (41x161x1): Interpolated grid: dx=1.500 mm, dy=1.500 mm

ICOM IC-F2000D 450-512 MHz Head 4W/Head Frontal, d=25mm, Pin=4W (EX-Probe)/Zoom Scan (5x5x7) (6x5x7)/Cube 0: Measurement grid: dx=7.5mm, dy=7.5mm, dz=5mm
Reference Value = 24.63 V/m; Power Drift = -0.01 dB
Peak SAR (extrapolated) = 7.94 W/kg
SAR(1 g) = 5.1 W/kg; SAR(10 g) = 3.75 W/kg (SAR corrected for target medium)

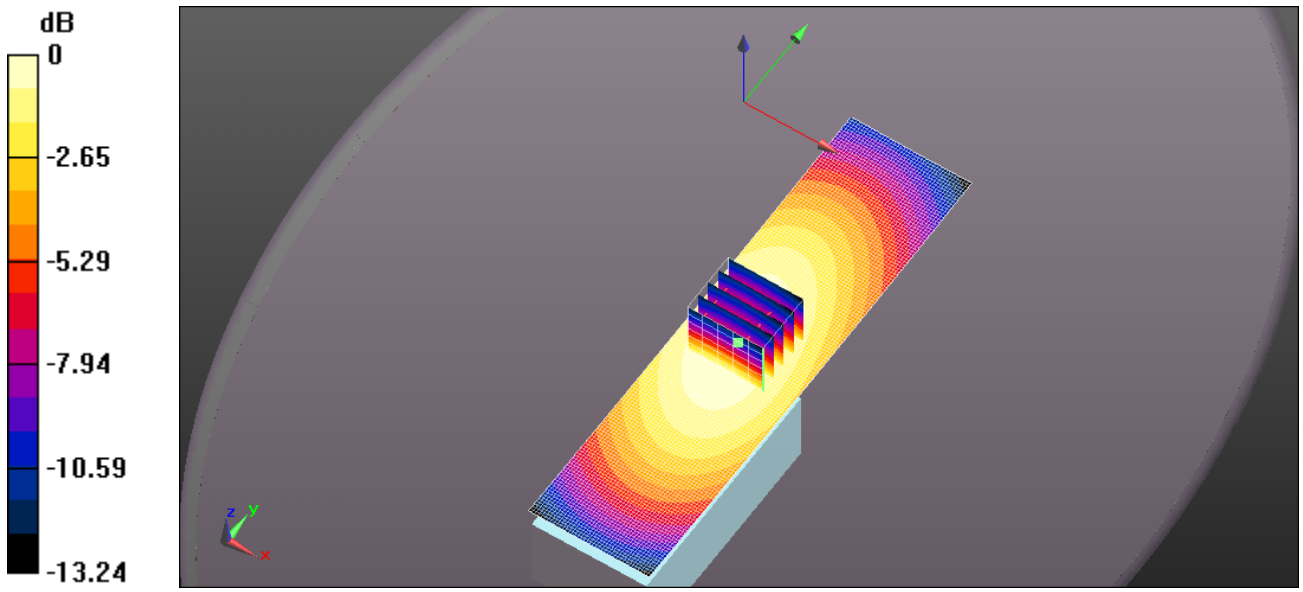

0 dB = 7.08 W/kg = 8.50 dBW/kg

Test Laboratory: Ultratech Group of Labs

FILE NAME: ICOM-409Q BP-278 SC61UC 460MHZ 142MM 496MHZ.DA52:0

DUT: Icom IC-F2000D; Type: 450-512 MHz PTT; Serial: 00000525-0
Program Name: System Performance Check at 450 MHz

Communication System: UID 0, CW (0); Frequency: 496 MHz;Duty Cycle: 1:1
Medium parameters used (interpolated): f = 496 MHz; σ = 0.961 S/m; ε_r = 43.8; ρ = 1000 kg/m^3
Phantom section: Flat Section

DASY4 Configuration:
- Probe: EX3DV4 - SN3673; ConvF(10.3, 10.3, 10.3); Calibrated: 8/24/2015;
- Sensor-Surface: 1.4mm (Mechanical Surface Detection)
- Electronics: DAE4 Sn874; Calibrated: 8/24/2015
- Phantom: ELI 4.0; Type: QD OVA 001 BB; Serial: 1057
- ; SEMCAD X Version 14.6.10 (7331)

ICOM IC-F2000D 450-512 MHz Head 4W/Head Frontal, d=25mm, Pin=4W (EX-Probe)/Area Scan (41x161x1): Interpolated grid: dx=1.500 mm, dy=1.500 mm
Maximum value of SAR (interpolated) = 8.63 W/kg
ICOM IC-F2000D 450-512 MHz Head 4W/Head Frontal, d=25mm, Pin=4W (EX-Probe)/Zoom Scan (5x5x7) (6x6x7)/Cube 0: Measurement grid: dx=7.5mm, dy=7.5mm, dz=5mm
Reference Value = 36.16 V/m; Power Drift = -0.36 dB
Peak SAR (extrapolated) = 8.61 W/kg
SAR(1 g) = 5.62 W/kg; SAR(10 g) = 4.15 W/kg (SAR corrected for target medium)
Maximum value of SAR (measured) = 7.67 W/kg

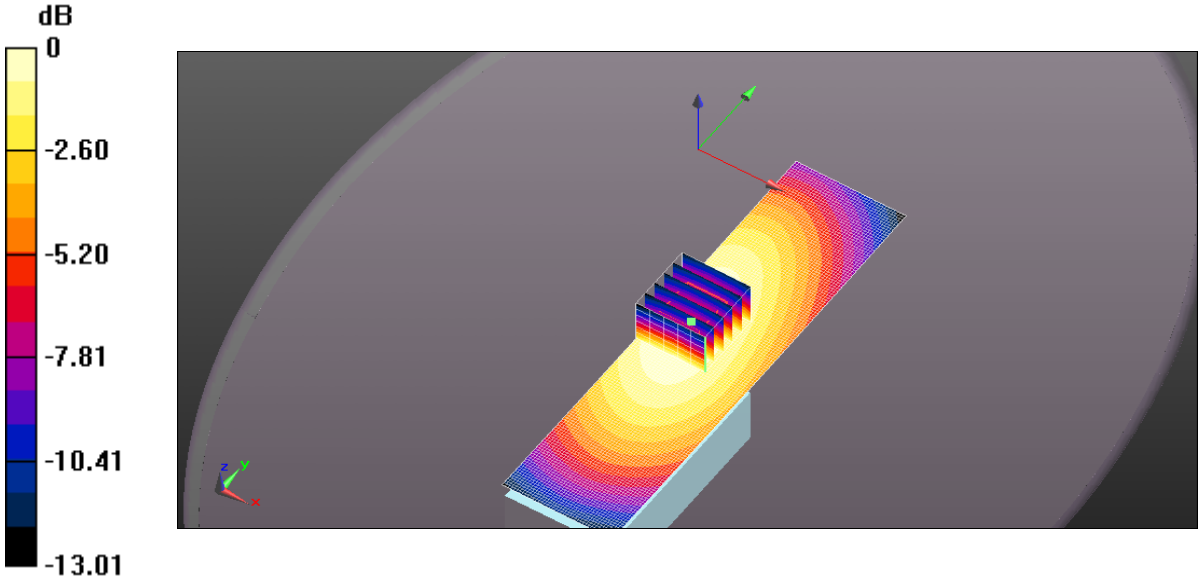

0 dB = 8.63 W/kg = 9.36 dBW/kg

Test Laboratory: Ultratech Group of Labs

FILE NAME: ICOM-409Q BP-280 SC61UC 480MHZ 136MM 465MHZ.DA52:0

DUT: Icom IC-F2000D ; Type: 450-512 MHz PTT; Serial: 00000525-0
Program Name: System Performance Check at 450 MHz

Communication System: UID 0, CW (0); Frequency: 465 MHz;Duty Cycle: 1:1
Medium parameters used: f = 465 MHz; σ = 0.926 S/m; ε_r = 44.542; ρ = 1000 kg/m^3
Phantom section: Flat Section

DASY4 Configuration:
- Probe: EX3DV4 - SN3673; ConvF(10.3, 10.3, 10.3); Calibrated: 8/24/2015;
- Sensor-Surface: 1.4mm (Mechanical Surface Detection)
- Electronics: DAE4 Sn874; Calibrated: 8/24/2015
- Phantom: ELI 4.0; Type: QD OVA 001 BB; Serial: 1057
- ; SEMCAD X Version 14.6.10 (7331)

ICOM IC-F2000D 450-512 MHz Head 4W/Head Frontal, d=25mm, Pin=4W (EX-Probe)/Area Scan (41x161x1): Interpolated grid: dx=1.500 mm, dy=1.500 mm
Maximum value of SAR (interpolated) = 3.26 W/kg
ICOM IC-F2000D 450-512 MHz Head 4W/Head Frontal, d=25mm, Pin=4W (EX-Probe)/Zoom Scan (5x5x7) (6x5x7)/Cube 0: Measurement grid: dx=7.5mm, dy=7.5mm, dz=5mm
Reference Value = 19.56 V/m; Power Drift = -0.03 dB
Peak SAR (extrapolated) = 3.69 W/kg
SAR(1 g) = 2.49 W/kg; SAR(10 g) = 1.83 W/kg (SAR corrected for target medium)
Maximum value of SAR (measured) = 3.29 W/kg

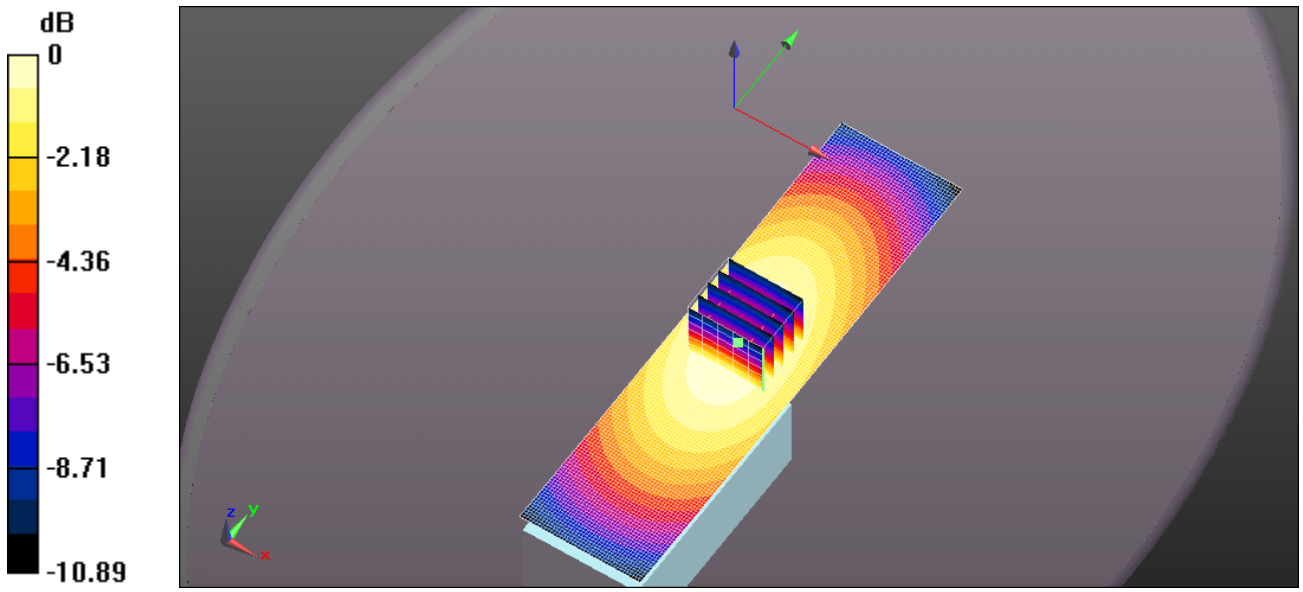

0 dB = 3.26 W/kg = 5.13 dBW/kg

Test Laboratory: Ultratech Group of Labs

FILE NAME: ICOM-409Q BP-280 SC61UC 480MHZ 136MM 496MHZ.DA52:0

DUT: Icom IC-F2000D; Type: 450-512 MHz PTT; Serial: 00000525-0
Program Name: System Performance Check at 450 MHz

Communication System: UID 0, CW (0); Frequency: 496 MHz;Duty Cycle: 1:1
Medium parameters used (interpolated): f = 496 MHz; σ = 0.961 S/m; ε_r = 43.8; ρ = 1000 kg/m^3
Phantom section: Flat Section

DASY4 Configuration:
- Probe: EX3DV4 - SN3673; ConvF(10.3, 10.3, 10.3); Calibrated: 8/24/2015;
- Sensor-Surface: 1.4mm (Mechanical Surface Detection)
- Electronics: DAE4 Sn874; Calibrated: 8/24/2015
- Phantom: ELI 4.0; Type: QD OVA 001 BB; Serial: 1057
- ; SEMCAD X Version 14.6.10 (7331)

ICOM IC-F2000D 450-512 MHz Head 4W/Head Frontal, d=25mm, Pin=4W (EX-Probe)/Area Scan (41x161x1): Interpolated grid: dx=1.500 mm, dy=1.500 mm

ICOM IC-F2000D 450-512 MHz Head 4W/Head Frontal, d=25mm, Pin=4W (EX-Probe)/Zoom Scan (5x5x7) (6x5x7)/Cube 0: Measurement grid: dx=7.5mm, dy=7.5mm, dz=5mm
Reference Value = 26.42 V/m; Power Drift = -0.05 dB
Peak SAR (extrapolated) = 9.16 W/kg
SAR(1 g) = 5.94 W/kg; SAR(10 g) = 4.35 W/kg (SAR corrected for target medium)

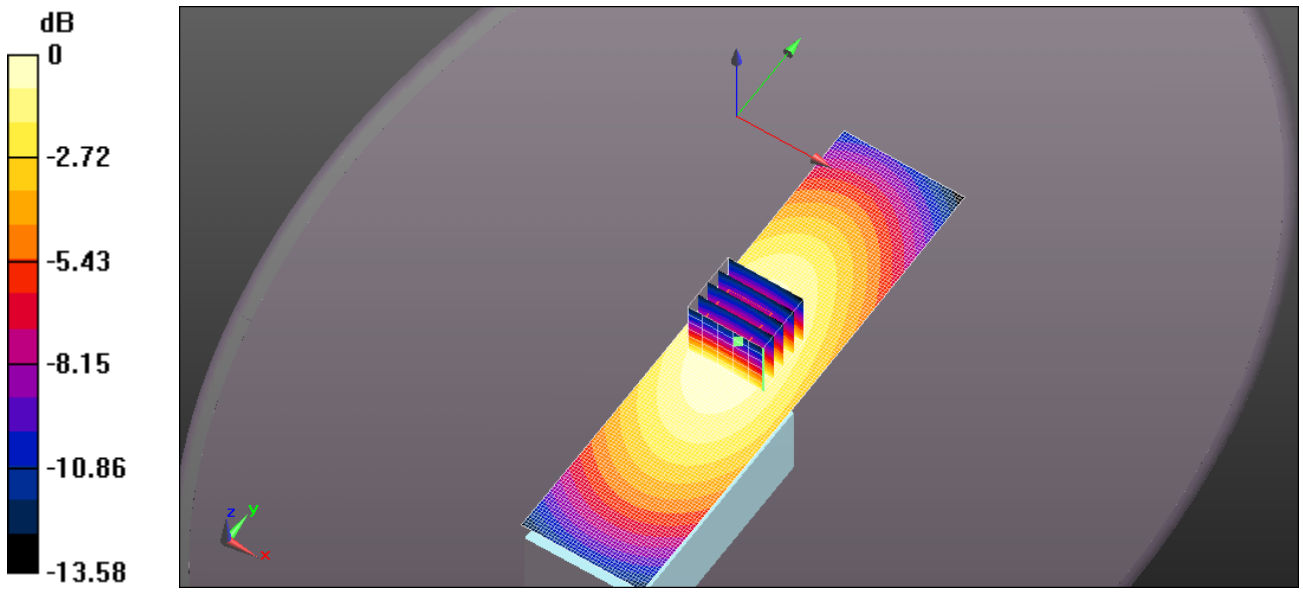

0 dB = 8.18 W/kg = 9.13 dBW/kg

Test Laboratory: Ultratech Group of Labs

FILE NAME: ICOM-409Q BP-280 SC61UC 500MHZ 129MM 475.2MHZ.DA52:0

DUT: Icom IC-F2000D ; Type: 450-512 MHz PTT; Serial: 00000525-0
Program Name: System Performance Check at 450 MHz

Communication System: UID 0, CW (0); Frequency: 475.2 MHz; Duty Cycle: 1:1
Medium parameters used (interpolated): f = 475.2 MHz; σ = 0.939 S/m; ε_r = 44.235; ρ = 1000 kg/m^3
Phantom section: Flat Section

DASY4 Configuration:
- Probe: EX3DV4 - SN3673; ConvF(10.3, 10.3, 10.3); Calibrated: 8/24/2015;
- Sensor-Surface: 1.4mm (Mechanical Surface Detection)
- Electronics: DAE4 Sn874; Calibrated: 8/24/2015
- Phantom: ELI 4.0; Type: QD OVA 001 BB; Serial: 1057
- ; SEMCAD X Version 14.6.10 (7331)

ICOM IC-F2000D 450-512 MHz Head 4W/Head Frontal, d=25mm, Pin=4W (EX-Probe)/Area Scan (41x161x1): Interpolated grid: dx=1.500 mm, dy=1.500 mm

ICOM IC-F2000D 450-512 MHz Head 4W/Head Frontal, d=25mm, Pin=4W (EX-Probe)/Zoom Scan (5x5x7) (6x5x7)/Cube 0: Measurement grid: dx=7.5mm, dy=7.5mm, dz=5mm
Reference Value = 15.45 V/m; Power Drift = -0.01 dB
Peak SAR (extrapolated) = 2.80 W/kg
SAR(1 g) = 1.85 W/kg; SAR(10 g) = 1.36 W/kg (SAR corrected for target medium)

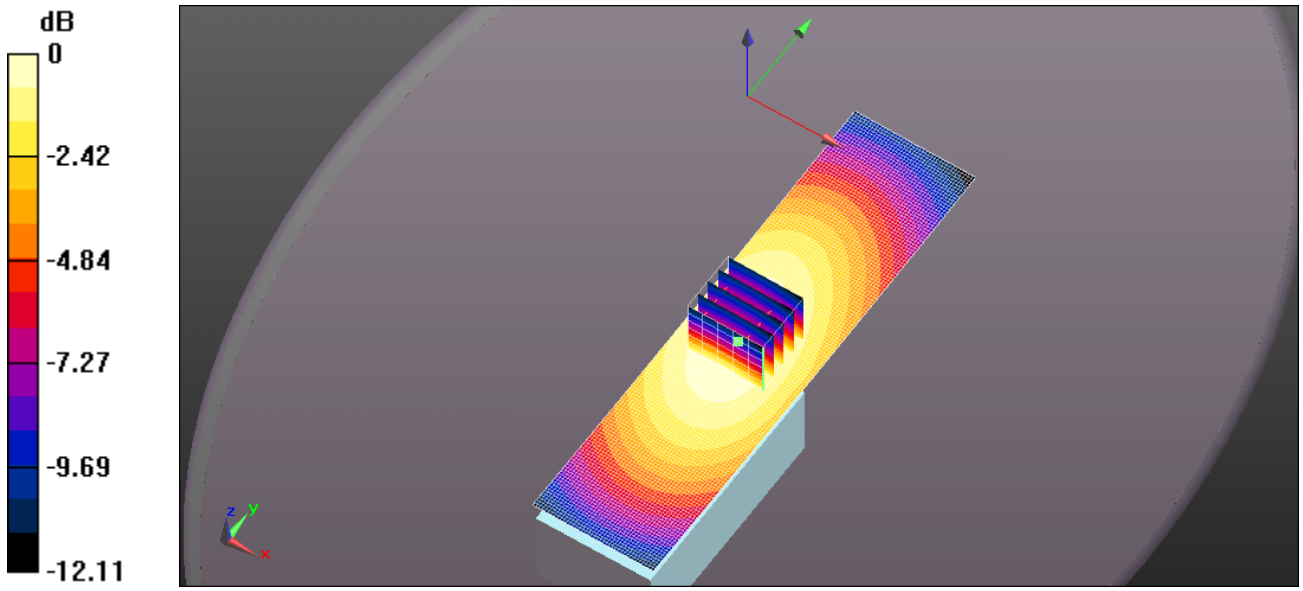

0 dB = 2.47 W/kg = 3.93 dBW/kg

Test Laboratory: Ultratech Group of Labs

FILE NAME: ICOM-409Q BP-280 SC61UC 500MHZ 129MM 512MHZ.DA52:0

DUT: Icom IC-F2000D; Type: 450-512 MHz PTT; Serial: 00000525-0
Program Name: System Performance Check at 450 MHz

Communication System: UID 0, CW (0); Frequency: 512 MHz;Duty Cycle: 1:1
Medium parameters used (interpolated): f = 512 MHz; σ = 0.972 S/m; ε_r = 43.414; ρ = 1000 kg/m^3
Phantom section: Flat Section

DASY4 Configuration:
- Probe: EX3DV4 - SN3673; ConvF(10.3, 10.3, 10.3); Calibrated: 8/24/2015;
- Sensor-Surface: 1.4mm (Mechanical Surface Detection)
- Electronics: DAE4 Sn874; Calibrated: 8/24/2015
- Phantom: ELI 4.0; Type: QD OVA 001 BB; Serial: 1057
- ; SEMCAD X Version 14.6.10 (7331)

ICOM IC-F2000D 450-512 MHz Head 4W/Head Frontal, d=25mm, Pin=4W (EX-Probe)/Area Scan (41x161x1): Interpolated grid: dx=1.500 mm, dy=1.500 mm

ICOM IC-F2000D 450-512 MHz Head 4W/Head Frontal, d=25mm, Pin=4W (EX-Probe)/Zoom Scan (5x5x7) (6x5x7)/Cube 0: Measurement grid: dx=7.5mm, dy=7.5mm, dz=5mm
Reference Value = 26.05 V/m; Power Drift = -0.05 dB
Peak SAR (extrapolated) = 9.36 W/kg
SAR(1 g) = 6 W/kg; SAR(10 g) = 4.4 W/kg (SAR corrected for target medium)

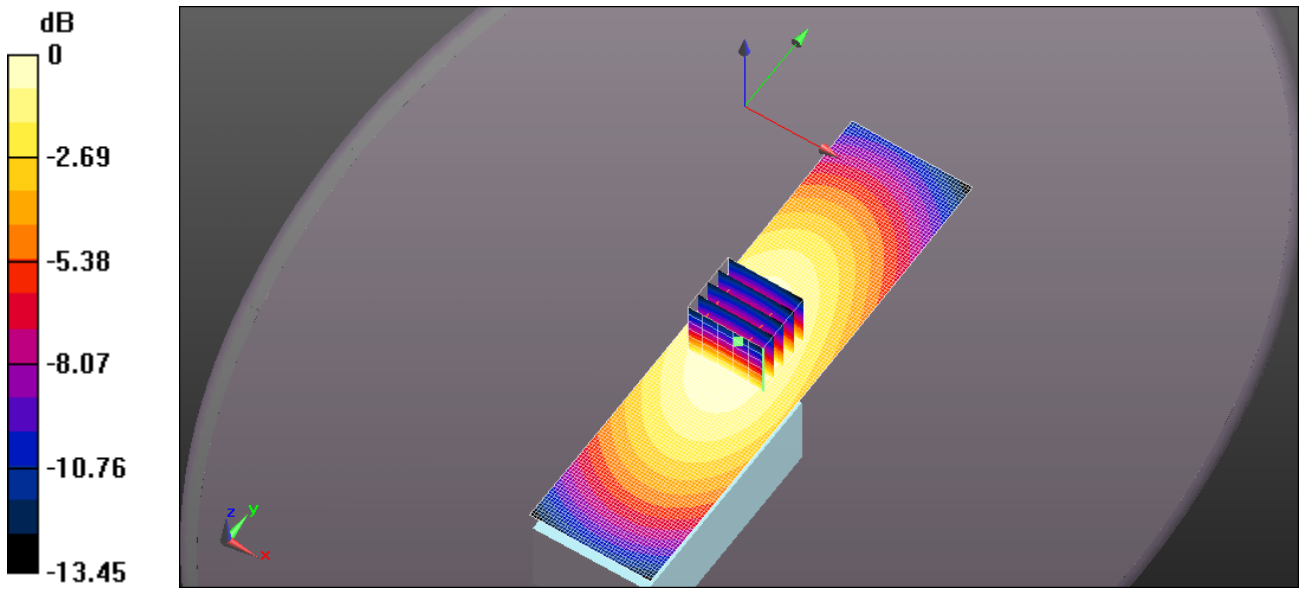

0 dB = 8.30 W/kg = 9.19 dBW/kg

Test Laboratory: Ultratech Group of Labs

FILE NAME: ICOM-409Q BP-280 SC61UC 520MHZ 125MM 478.4MHZ.DA52:0

DUT: Icom IC-F2000D; Type: 450-512 MHz PTT; Serial: 00000525-0
Program Name: System Performance Check at 450 MHz

Communication System: UID 0, CW (0); Frequency: 478.4 MHz;Duty Cycle: 1:1
Medium parameters used (interpolated): f = 478.4 MHz; σ = 0.943 S/m; ε_r = 44.158; ρ = 1000 kg/m^3
Phantom section: Flat Section

DASY4 Configuration:
- Probe: EX3DV4 - SN3673; ConvF(10.3, 10.3, 10.3); Calibrated: 8/24/2015;
- Sensor-Surface: 1.4mm (Mechanical Surface Detection)
- Electronics: DAE4 Sn874; Calibrated: 8/24/2015
- Phantom: ELI 4.0; Type: QD OVA 001 BB; Serial: 1057
- ; SEMCAD X Version 14.6.10 (7331)

ICOM IC-F2000D 450-512 MHz Head 4W/Head Frontal, d=25mm, Pin=4W (EX-Probe)/Area Scan (41x161x1): Interpolated grid: dx=1.500 mm, dy=1.500 mm

ICOM IC-F2000D 450-512 MHz Head 4W/Head Frontal, d=25mm, Pin=4W (EX-Probe)/Zoom Scan (5x5x7) (6x5x7)/Cube 0: Measurement grid: dx=7.5mm, dy=7.5mm, dz=5mm
Reference Value = 12.28 V/m; Power Drift = -0.01 dB
Peak SAR (extrapolated) = 2.43 W/kg
SAR(1 g) = 1.6 W/kg; SAR(10 g) = 1.17 W/kg (SAR corrected for target medium)

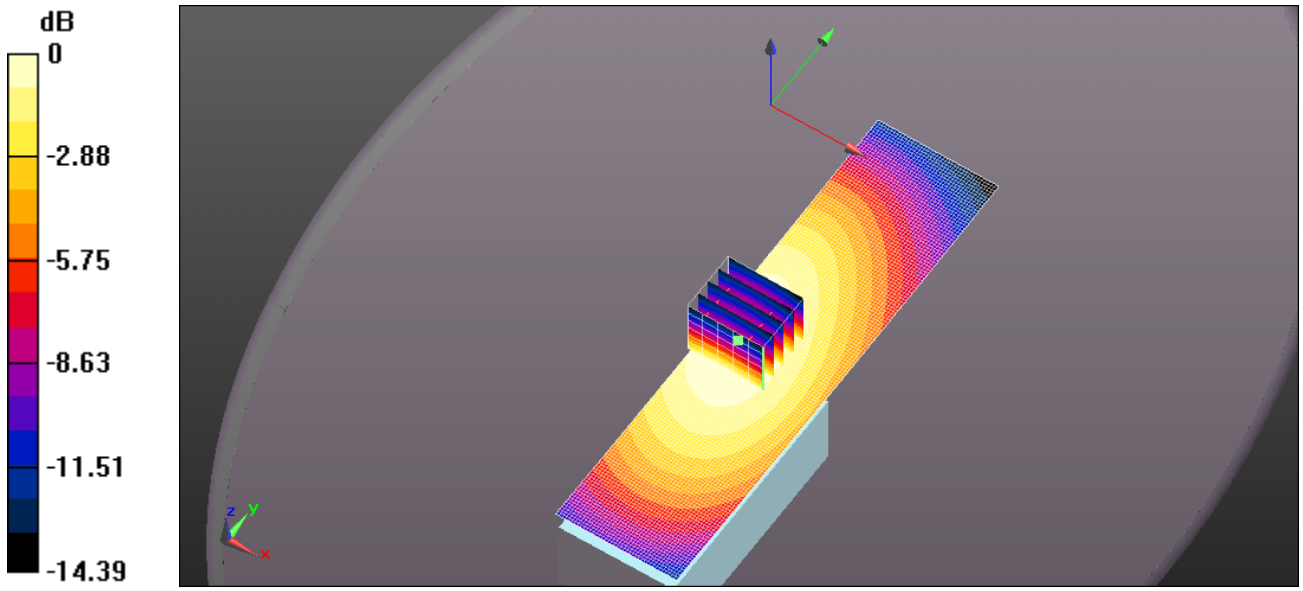

0 dB = 2.15 W/kg = 3.32 dBW/kg

Test Laboratory: Ultratech Group of Labs

FILE NAME: ICOM-409Q BP-280 SC61UC 520MHZ 125MM 500MHZ.DA52:0

DUT: Icom IC-F2000D ; Type: 450-512 MHz PTT; Serial: 00000525-0
Program Name: System Performance Check at 450 MHz

Communication System: UID 0, CW (0); Frequency: 500 MHz;Duty Cycle: 1:1
Medium parameters used: f = 500 MHz; σ = 0.964 S/m; ε_r = 43.688; ρ = 1000 kg/m^3
Phantom section: Flat Section

DASY4 Configuration:
- Probe: EX3DV4 - SN3673; ConvF(10.3, 10.3, 10.3); Calibrated: 8/24/2015;
- Sensor-Surface: 1.4mm (Mechanical Surface Detection)
- Electronics: DAE4 Sn874; Calibrated: 8/24/2015
- Phantom: ELI 4.0; Type: QD OVA 001 BB; Serial: 1057
- ; SEMCAD X Version 14.6.10 (7331)

ICOM IC-F2000D 450-512 MHz Head 4W/Head Frontal, d=25mm, Pin=4W (EX-Probe)/Area Scan (41x161x1): Interpolated grid: dx=1.500 mm, dy=1.500 mm
Maximum value of SAR (interpolated) = 4.20 W/kg

ICOM IC-F2000D 450-512 MHz Head 4W/Head Frontal, d=25mm, Pin=4W (EX-Probe)/Zoom Scan (5x5x7) (6x5x7)/Cube 0: Measurement grid: dx=7.5mm, dy=7.5mm, dz=5mm
Reference Value = 17.51 V/m; Power Drift = -0.03 dB
Peak SAR (extrapolated) = 4.75 W/kg
SAR(1 g) = 3.08 W/kg; SAR(10 g) = 2.26 W/kg (SAR corrected for target medium)
Maximum value of SAR (measured) = 4.22 W/kg

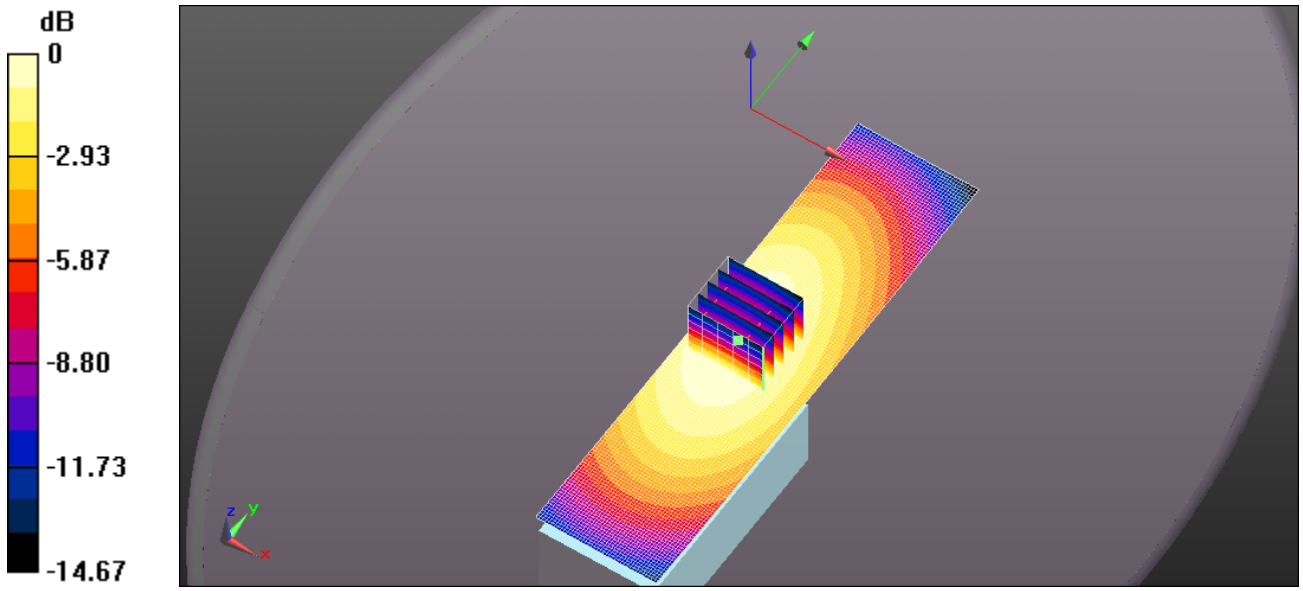

0 dB = 4.20 W/kg = 6.23 dBW/kg

EXHIBIT 2. BODY SAR MEASUREMENT SUMMARY

Antenna	Power (dBm)	CH	CH. Freq	Measured BODY SAR 1g (W/Kg)		
				BP-278	BP-279	BP-280
			(MHz)	1130maH	1485mAh	2280mAh
FA-SC72U 470-520 MHz Blue Tip 138mm	36.25	4	470			4.76
	36.22	7	484			6.19
	36.24	10	500			10.10
	36.24	11	512	8.07	9.37	10.20
FA-SC57U 430-470 MHz Red Tip 140mm	36.15	1	450			
	36.21	2	460			3.38
	36.25	4	470			
FA-SC73US 450-490 MHz Red Tip 60mm	36.15	1	450			3.10
	36.24	3	465			
	36.25	5	475.2			6.25
	36.22	8	490			
Cut Antenna 380-520MHz						
SC61UC 420MHz White Tip 156 mm	36.15	1	450			7.33
SC61UC 440MHz White Tip 148mm	36.15	1	450			7.05
	36.24	3	465			8.02
	36.25	5	475.2	7.34	8.04	8.30
SC61UC 460MHz White Tip 142mm	36.15	1	450			5.83
	36.24	3	465			7.10
	36.22	7	484			9.09
	36.23	9	496	7.45	9.04	9.68
SC61UC 480MHz White Tip 136mm	36.15	1	450			
	36.24	3	465			5.26
	36.22	7	484			7.02
	36.23	9	496	9.51	11.10	11.20
	36.24	11	512			9.20
SC61UC 500MHz White Tip 129mm	36.21	2	460			
	36.25	5	475.2			4.60
	36.23	9	496			8.28
	36.24	11	512	8.69	10.30	10.60
SC61UC 520MHz White Tip 125mm	36.23	6	478.4			3.77
	36.22	8	490			
	36.24	10	500			6.68
	36.24	11	512			

Test Laboratory: Ultratech Group of Labs

FILE NAME: ICOM-409Q BP-280 SC72U 138MM 470MHZ.DA52:0

DUT: DUT Sample Brick w. Antenna; Type: Sample; Serial: IMEI Number
Program Name: System Performance Check at 450 MHz

Communication System: UID 10000, CW; Frequency: 470 MHz; Duty Cycle: 1:1
Medium parameters used: f = 470 MHz; σ = 0.932 S/m; ε_r = 55.35; ρ = 1000 kg/m^3
Phantom section: Flat Section

DASY4 Configuration:
- Probe: EX3DV4 - SN3673; ConvF(10.29, 10.29, 10.29); Calibrated: 8/24/2015;
- Sensor-Surface: 1.4mm (Mechanical Surface Detection)
- Electronics: DAE4 Sn874; Calibrated: 8/24/2015
- Phantom: ELI 4.0; Type: QD OVA 001 BB; Serial: 1057
- ; SEMCAD X Version 14.6.10 (7331)

ICOM IC-F2000D 450-512 MHz Body/Body - Belt Clip Touching, d=0mm, Pin=4W (ES-Probe)/Area Scan (41x181x1): Interpolated grid: dx=1.500 mm, dy=1.500 mm
Maximum value of SAR (interpolated) = 6.12 W/kg

ICOM IC-F2000D 450-512 MHz Body/Body - Belt Clip Touching, d=0mm, Pin=4W (ES-Probe)/Zoom Scan (5x5x7) (6x5x7)/Cube 0: Measurement grid: dx=7.5mm, dy=7.5mm, dz=5mm
Reference Value = 82.40 V/m; Power Drift = -0.04 dB
Peak SAR (extrapolated) = 6.87 W/kg
SAR(1 g) = 4.76 W/kg; SAR(10 g) = 3.48 W/kg (SAR corrected for target medium)
Maximum value of SAR (measured) = 6.09 W/kg

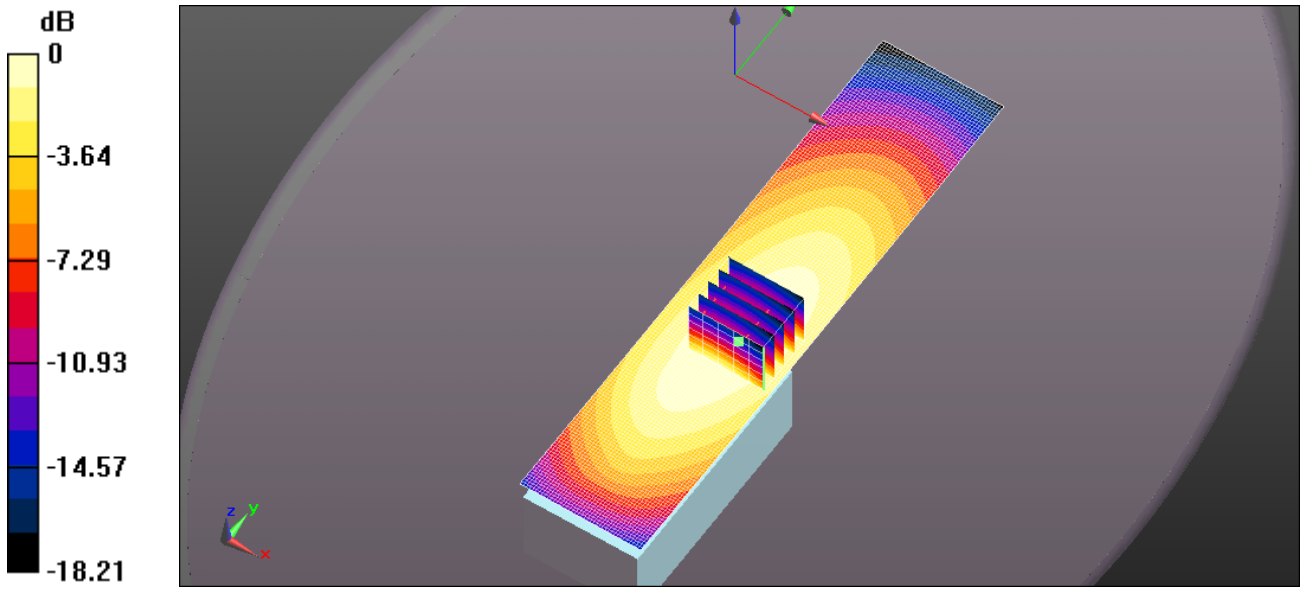

0 dB = 6.12 W/kg = 7.87 dBW/kg

Test Laboratory: Ultratech Group of Labs

FILE NAME: ICOM-409Q BP-280 SC72U 138MM 484MHZ.DA52:0

DUT: DUT Sample Brick w. Antenna; Type: Sample; Serial: IMEI Number
Program Name: System Performance Check at 450 MHz

Communication System: UID 0, CW (0); Frequency: 484 MHz;Duty Cycle: 1:1
Medium parameters used (interpolated): f = 484 MHz; σ = 0.95 S/m; ε_r = 55.179; ρ = 1000 kg/m^3
Phantom section: Flat Section

DASY4 Configuration:
- Probe: EX3DV4 - SN3673; ConvF(10.29, 10.29, 10.29); Calibrated: 8/24/2015;
- Sensor-Surface: 1.4mm (Mechanical Surface Detection)
- Electronics: DAE4 Sn874; Calibrated: 8/24/2015
- Phantom: ELI 4.0; Type: QD OVA 001 BB; Serial: 1057
- ; SEMCAD X Version 14.6.10 (7331)

ICOM IC-F2000D 450-512 MHz Body/Body - Belt Clip Touching, d=0mm, Pin=4W (ES-Probe)/Area Scan (41x181x1): Interpolated grid: dx=1.500 mm, dy=1.500 mm
Maximum value of SAR (interpolated) = 7.92 W/kg

ICOM IC-F2000D 450-512 MHz Body/Body - Belt Clip Touching, d=0mm, Pin=4W (ES-Probe)/Zoom Scan (5x5x7) (6x5x7)/Cube 0: Measurement grid: dx=7.5mm, dy=7.5mm, dz=5mm
Reference Value = 93.74 V/m; Power Drift = -0.15 dB
Peak SAR (extrapolated) = 9.00 W/kg
SAR(1 g) = 6.19 W/kg; SAR(10 g) = 4.48 W/kg (SAR corrected for target medium)
Maximum value of SAR (measured) = 7.95 W/kg

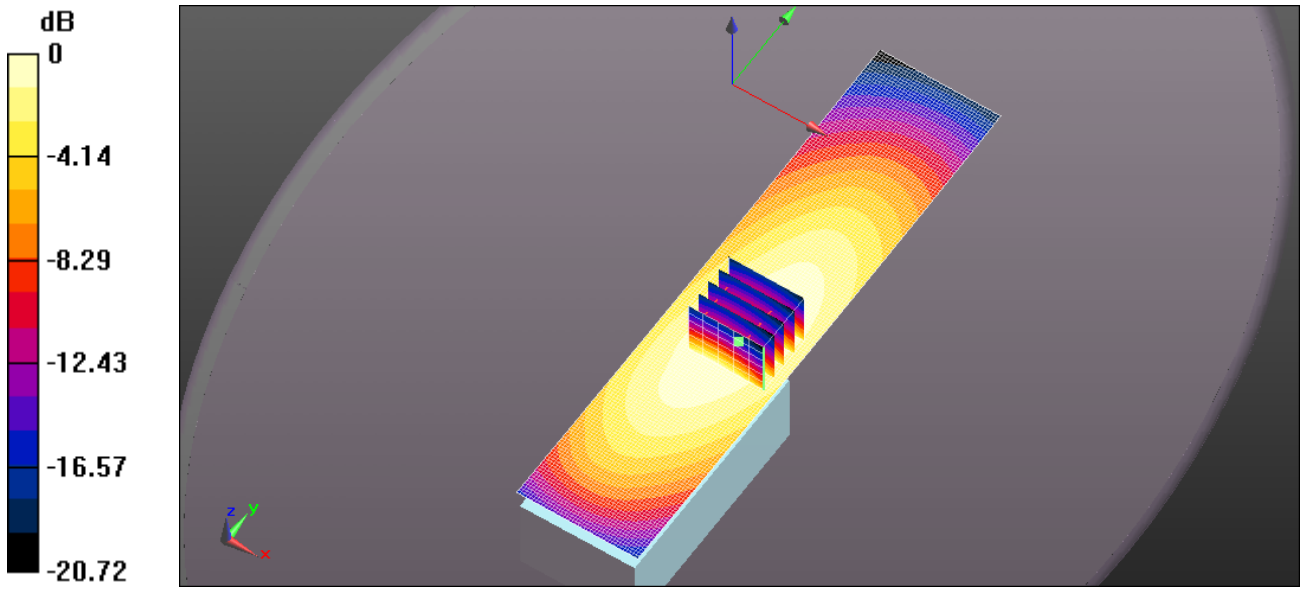

0 dB = 7.92 W/kg = 8.99 dBW/kg

Test Laboratory: Ultratech Group of Labs

FILE NAME: ICOM-409Q BP-280 SC72U 138MM 500MHZ.DA52:0

DUT: DUT Sample Brick w. Antenna; Type: Sample; Serial: IMEI Number
Program Name: System Performance Check at 450 MHz

Communication System: UID 0, CW (0); Frequency: 500 MHz; Duty Cycle: 1:1
Medium parameters used: f = 500 MHz; σ = 0.965 S/m; ε_r = 55.136; ρ = 1000 kg/m^3
Phantom section: Flat Section

DASY4 Configuration:
- Probe: EX3DV4 - SN3673; ConvF(10.29, 10.29, 10.29); Calibrated: 8/24/2015;
- Sensor-Surface: 1.4mm (Mechanical Surface Detection)
- Electronics: DAE4 Sn874; Calibrated: 8/24/2015
- Phantom: ELI 4.0; Type: QD OVA 001 BB; Serial: 1057
- ; SEMCAD X Version 14.6.10 (7331)

ICOM IC-F2000D 450-512 MHz Body/Body - Belt Clip Touching, d=0mm, Pin=4W (ES-Probe)/Area Scan (41x181x1): Interpolated grid: dx=1.500 mm, dy=1.500 mm
Maximum value of SAR (interpolated) = 13.0 W/kg

ICOM IC-F2000D 450-512 MHz Body/Body - Belt Clip Touching, d=0mm, Pin=4W (ES-Probe)/Zoom Scan (5x5x7) (6x5x7)/Cube 0: Measurement grid: dx=7.5mm, dy=7.5mm, dz=5mm
Reference Value = 117.8 V/m; Power Drift = -0.25 dB
Peak SAR (extrapolated) = 14.6 W/kg
SAR(1 g) = 10.1 W/kg; SAR(10 g) = 7.35 W/kg (SAR corrected for target medium)
Maximum value of SAR (measured) = 12.9 W/kg

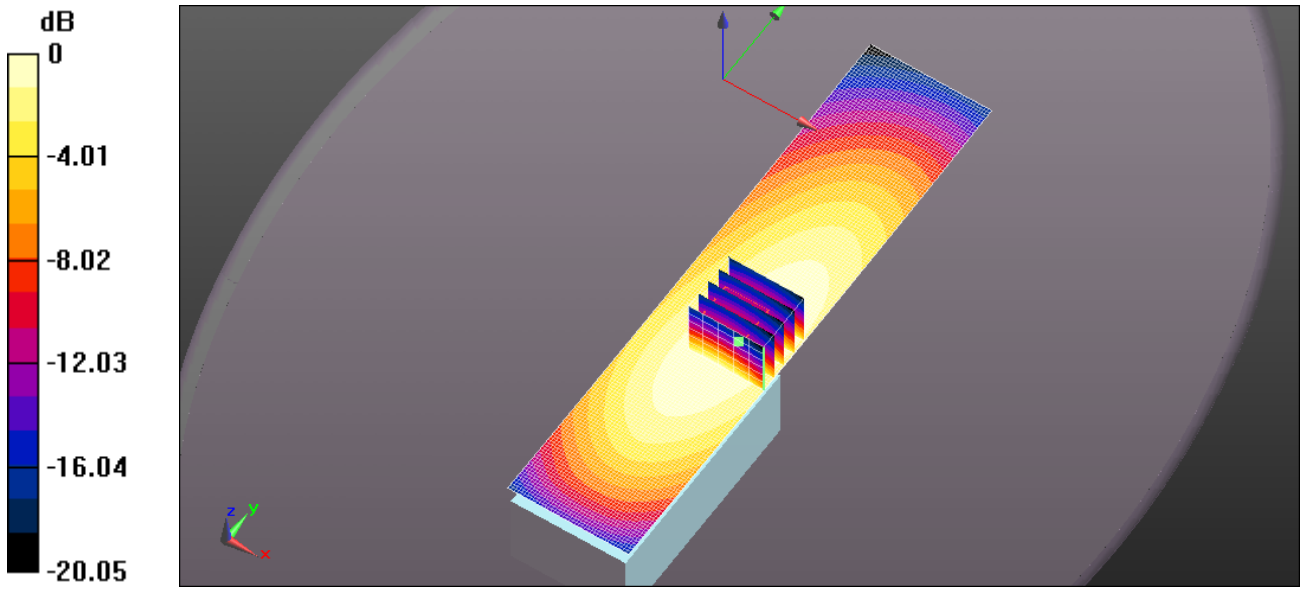

0 dB = 13.0 W/kg = 11.14 dBW/kg

Test Laboratory: Ultratech Group of Labs

FILE NAME: ICOM-409Q BP-280 SC72U 138MM 512MHZ.DA52:0

DUT: DUT Sample Brick w. Antenna; Type: Sample; Serial: IMEI Number
Program Name: System Performance Check at 450 MHz

Communication System: UID 0, CW (0); Frequency: 512 MHz;Duty Cycle: 1:1
Medium parameters used (interpolated): f = 512 MHz; σ = 0.974 S/m; ε_r = 55.028; ρ = 1000 kg/m^3
Phantom section: Flat Section

DASY4 Configuration:
- Probe: EX3DV4 - SN3673; ConvF(10.29, 10.29, 10.29); Calibrated: 8/24/2015;
- Sensor-Surface: 1.4mm (Mechanical Surface Detection)
- Electronics: DAE4 Sn874; Calibrated: 8/24/2015
- Phantom: ELI 4.0; Type: QD OVA 001 BB; Serial: 1057
- ; SEMCAD X Version 14.6.10 (7331)

ICOM IC-F2000D 450-512 MHz Body/Body - Belt Clip Touching, d=0mm, Pin=4W (ES-Probe)/Area Scan (41x181x1): Interpolated grid: dx=1.500 mm, dy=1.500 mm
Maximum value of SAR (interpolated) = 14.0 W/kg

ICOM IC-F2000D 450-512 MHz Body/Body - Belt Clip Touching, d=0mm, Pin=4W (ES-Probe)/Zoom Scan (5x5x7) (6x5x7)/Cube 0: Measurement grid: dx=7.5mm, dy=7.5mm, dz=5mm
Reference Value = 125.6 V/m; Power Drift = -0.32 dB
Peak SAR (extrapolated) = 14.8 W/kg
SAR(1 g) = 10.2 W/kg; SAR(10 g) = 7.38 W/kg (SAR corrected for target medium)
Maximum value of SAR (measured) = 13.1 W/kg

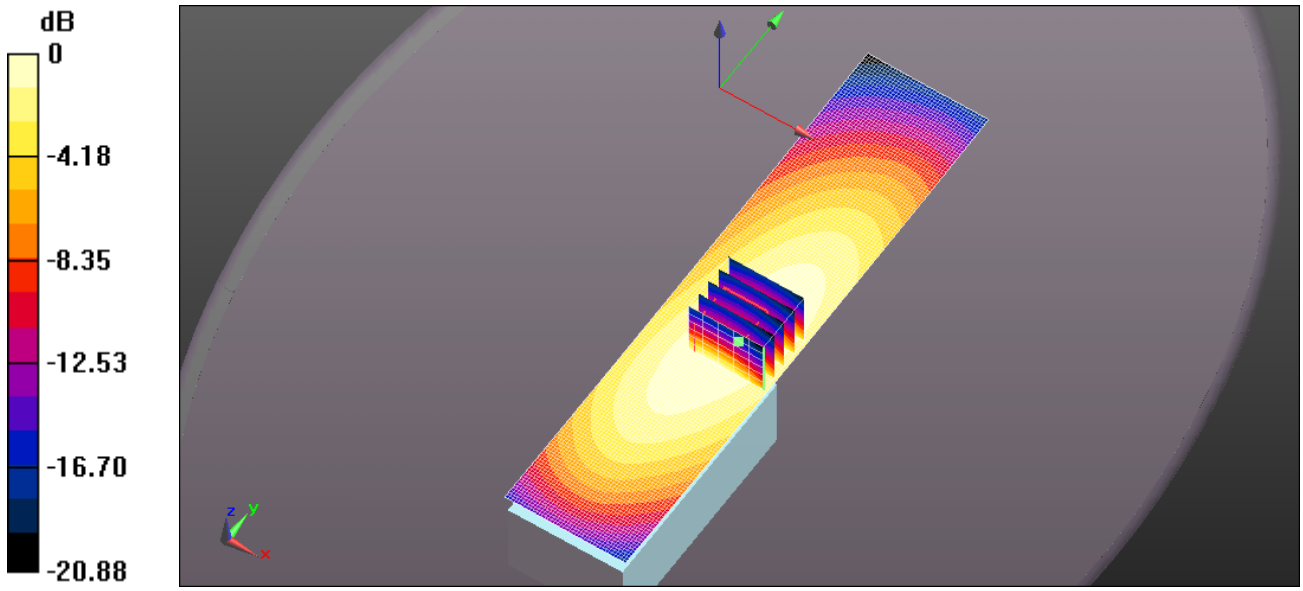

0 dB = 14.0 W/kg = 11.47 dBW/kg

Test Laboratory: Ultratech Group of Labs

FILE NAME: ICOM-409Q BP-279 SC72U 138MM 512MHZ.DA52:0

DUT: DUT Sample Brick w. Antenna; Type: Sample; Serial: IMEI Number
Program Name: System Performance Check at 450 MHz

Communication System: UID 0, CW (0); Frequency: 512 MHz; Duty Cycle: 1:1
Medium parameters used (interpolated): f = 512 MHz; σ = 0.974 S/m; ε_r = 55.028; ρ = 1000 kg/m^3
Phantom section: Flat Section

DASY4 Configuration:
- Probe: EX3DV4 - SN3673; ConvF(10.29, 10.29, 10.29); Calibrated: 8/24/2015;
- Sensor-Surface: 1.4mm (Mechanical Surface Detection)
- Electronics: DAE4 Sn874; Calibrated: 8/24/2015
- Phantom: ELI 4.0; Type: QD OVA 001 BB; Serial: 1057
- ; SEMCAD X Version 14.6.10 (7331)

ICOM IC-F2000D 450-512 MHz Body/Body - Belt Clip Touching, d=0mm, Pin=4W (ES-Probe)/Area Scan (41x181x1): Interpolated grid: dx=1.500 mm, dy=1.500 mm
Maximum value of SAR (interpolated) = 13.7 W/kg

ICOM IC-F2000D 450-512 MHz Body/Body - Belt Clip Touching, d=0mm, Pin=4W (ES-Probe)/Zoom Scan (5x5x7) (6x5x7)/Cube 0: Measurement grid: dx=7.5mm, dy=7.5mm, dz=5mm
Reference Value = 122.6 V/m; Power Drift = -0.44 dB
Peak SAR (extrapolated) = 13.6 W/kg
SAR(1 g) = 9.37 W/kg; SAR(10 g) = 6.81 W/kg (SAR corrected for target medium)
Maximum value of SAR (measured) = 12.0 W/kg

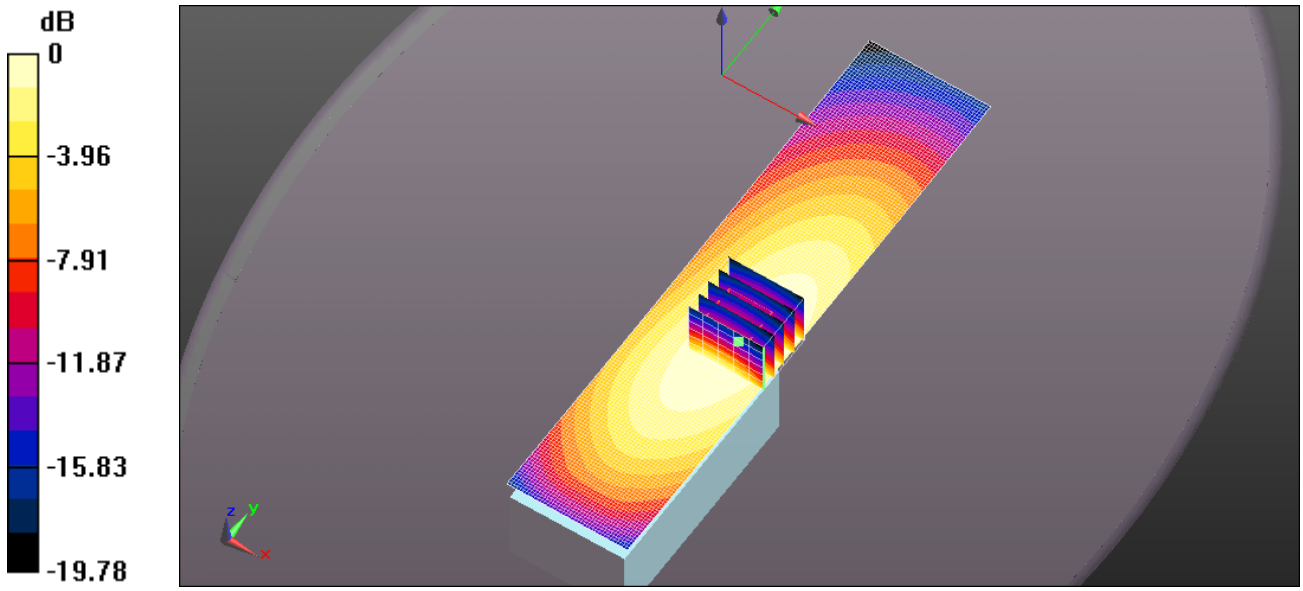

0 dB = 13.7 W/kg = 11.37 dBW/kg

Test Laboratory: Ultratech Group of Labs

FILE NAME: ICOM-409Q BP-278 SC72U 138MM 512MHZ.DA52:0

DUT: DUT Sample Brick w. Antenna; Type: Sample; Serial: IMEI Number
Program Name: System Performance Check at 450 MHz

Communication System: UID 0, CW (0); Frequency: 512 MHz;Duty Cycle: 1:1
Medium parameters used (interpolated): f = 512 MHz; σ = 0.974 S/m; ε_r = 55.028; ρ = 1000 kg/m^3
Phantom section: Flat Section

DASY4 Configuration:
- Probe: EX3DV4 - SN3673; ConvF(10.29, 10.29, 10.29); Calibrated: 8/24/2015;
- Sensor-Surface: 1.4mm (Mechanical Surface Detection)
- Electronics: DAE4 Sn874; Calibrated: 8/24/2015
- Phantom: ELI 4.0; Type: QD OVA 001 BB; Serial: 1057
- ; SEMCAD X Version 14.6.10 (7331)

ICOM IC-F2000D 450-512 MHz Body/Body - Belt Clip Touching, d=0mm, Pin=4W (ES-Probe)/Area Scan (41x181x1): Interpolated grid: dx=1.500 mm, dy=1.500 mm
Maximum value of SAR (interpolated) = 12.5 W/kg
ICOM IC-F2000D 450-512 MHz Body/Body - Belt Clip Touching, d=0mm, Pin=4W (ES-Probe)/Zoom Scan (5x5x7) (6x5x7)/Cube 0: Measurement grid: dx=7.5mm, dy=7.5mm, dz=5mm
Reference Value = 108.6 V/m; Power Drift = -0.40 dB
Peak SAR (extrapolated) = 11.8 W/kg
SAR(1 g) = 8.07 W/kg; SAR(10 g) = 5.82 W/kg (SAR corrected for target medium)
Maximum value of SAR (measured) = 10.4 W/kg

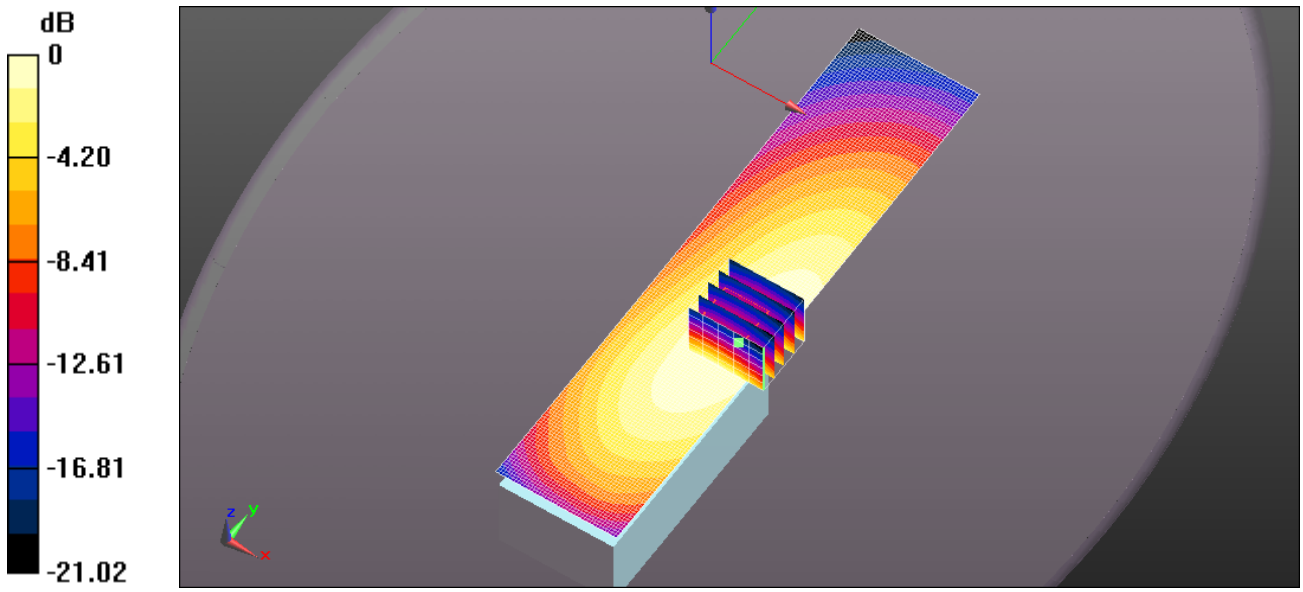

0 dB = 12.5 W/kg = 10.95 dBW/kg

Test Laboratory: Ultratech Group of Labs

FILE NAME: ICOM-409Q BP-280 SC57U 140MM 460MHZ.DA52:0

DUT: DUT Sample Brick w. Antenna; Type: Sample; Serial: IMEI Number
Program Name: System Performance Check at 450 MHz

Communication System: UID 0, CW (0); Frequency: 460 MHz;Duty Cycle: 1:1
Medium parameters used: f = 460 MHz; σ = 0.918 S/m; ε_r = 55.562; ρ = 1000 kg/m^3
Phantom section: Flat Section

DASY4 Configuration:
- Probe: EX3DV4 - SN3673; ConvF(10.29, 10.29, 10.29); Calibrated: 8/24/2015;
- Sensor-Surface: 1.4mm (Mechanical Surface Detection)
- Electronics: DAE4 Sn874; Calibrated: 8/24/2015
- Phantom: ELI 4.0; Type: QD OVA 001 BB; Serial: 1057
- ; SEMCAD X Version 14.6.10 (7331)

ICOM IC-F2000D 450-512 MHz Body/Body - Belt Clip Touching, d=0mm, Pin=4W (ES-Probe)/Area Scan (41x181x1): Interpolated grid: dx=1.500 mm, dy=1.500 mm
Maximum value of SAR (interpolated) = 4.37 W/kg
ICOM IC-F2000D 450-512 MHz Body/Body - Belt Clip Touching, d=0mm, Pin=4W (ES-Probe)/Zoom Scan (5x5x7) (6x5x7)/Cube 0: Measurement grid: dx=7.5mm, dy=7.5mm, dz=5mm
Reference Value = 71.59 V/m; Power Drift = -0.28 dB
Peak SAR (extrapolated) = 4.82 W/kg
SAR(1 g) = 3.38 W/kg; SAR(10 g) = 2.48 W/kg (SAR corrected for target medium)
Maximum value of SAR (measured) = 4.28 W/kg

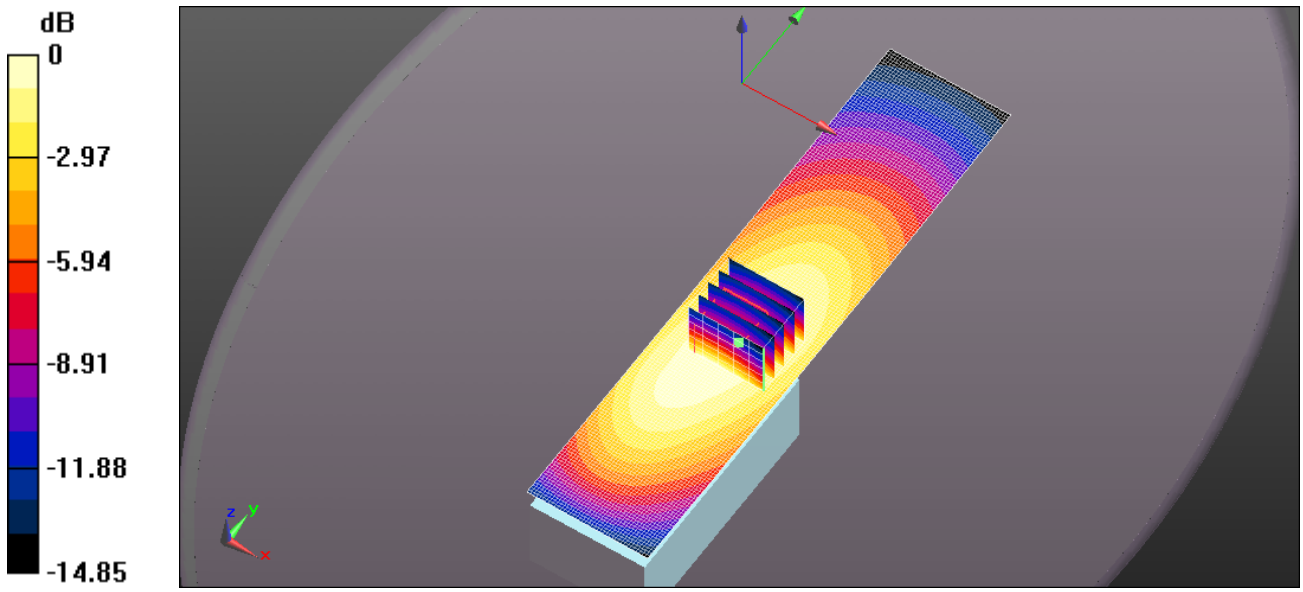

0 dB = 4.37 W/kg = 6.40 dBW/kg

Test Laboratory: Ultratech Group of Labs

FILE NAME: ICOM-409Q BP-280 SC73US 60MM 450MHZ.DA52:0

DUT: DUT Sample Brick w. Antenna; Type: Sample; Serial: IMEI Number
Program Name: System Performance Check at 450 MHz

Communication System: UID 0, CW (0); Frequency: 450 MHz;Duty Cycle: 1:1
Medium parameters used: f = 450 MHz; σ = 0.903 S/m; ε_r = 55.758; ρ = 1000 kg/m^3
Phantom section: Flat Section

DASY4 Configuration:
- Probe: EX3DV4 - SN3673; ConvF(10.29, 10.29, 10.29); Calibrated: 8/24/2015;
- Sensor-Surface: 1.4mm (Mechanical Surface Detection)
- Electronics: DAE4 Sn874; Calibrated: 8/24/2015
- Phantom: ELI 4.0; Type: QD OVA 001 BB; Serial: 1057
- ; SEMCAD X Version 14.6.10 (7331)

ICOM IC-F2000D 450-512 MHz Body/Body - Belt Clip Touching, d=0mm, Pin=4W (ES-Probe)/Area Scan (41x181x1): Interpolated grid: dx=1.500 mm, dy=1.500 mm
Maximum value of SAR (interpolated) = 3.88 W/kg
ICOM IC-F2000D 450-512 MHz Body/Body - Belt Clip Touching, d=0mm, Pin=4W (ES-Probe)/Zoom Scan (5x5x7) (6x5x7)/Cube 0: Measurement grid: dx=7.5mm, dy=7.5mm, dz=5mm
Reference Value = 64.59 V/m; Power Drift = -0.11 dB
Peak SAR (extrapolated) = 4.36 W/kg
SAR(1 g) = 3.1 W/kg; SAR(10 g) = 2.24 W/kg (SAR corrected for target medium)
Maximum value of SAR (measured) = 3.85 W/kg

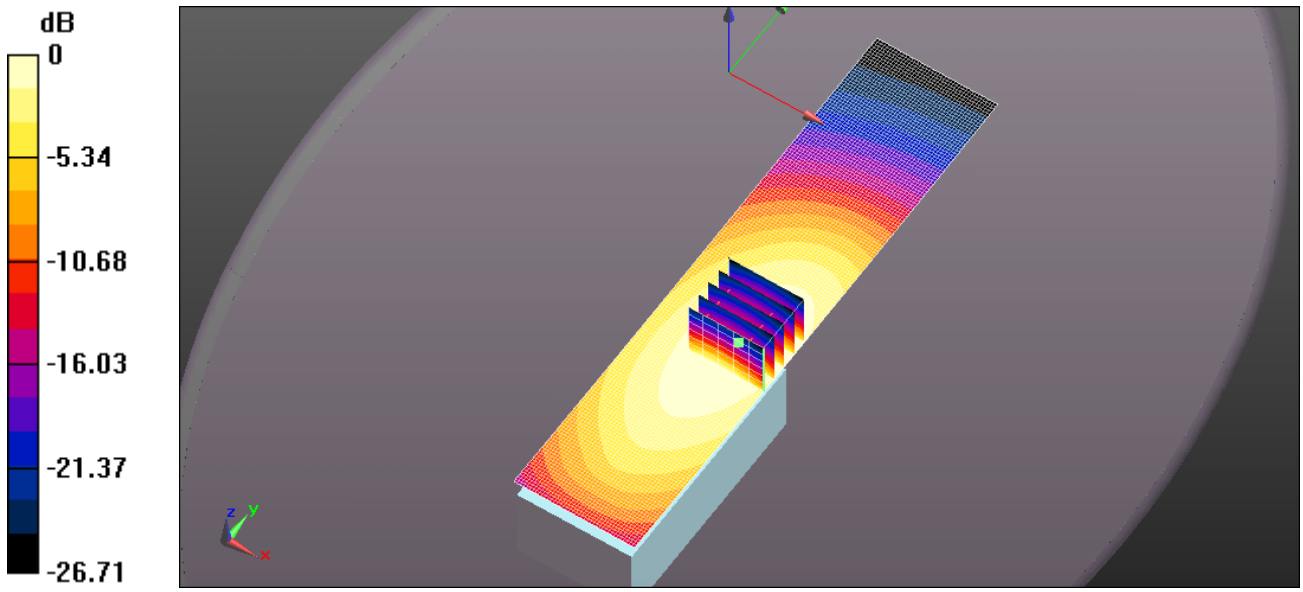

0 dB = 3.88 W/kg = 5.89 dBW/kg

Test Laboratory: Ultratech Group of Labs

FILE NAME: ICOM-409Q BP-280 SC73US 60MM 475.2MHZ.DA52:0

DUT: DUT Sample Brick w. Antenna; Type: Sample; Serial: IMEI Number
Program Name: System Performance Check at 450 MHz

Communication System: UID 0, CW (0); Frequency: 475.2 MHz; Duty Cycle: 1:1
Medium parameters used (interpolated): f = 475.2 MHz; σ = 0.939 S/m; ε_r = 55.29; ρ = 1000 kg/m^3
Phantom section: Flat Section

DASY4 Configuration:
- Probe: EX3DV4 - SN3673; ConvF(10.29, 10.29, 10.29); Calibrated: 8/24/2015;
- Sensor-Surface: 1.4mm (Mechanical Surface Detection)
- Electronics: DAE4 Sn874; Calibrated: 8/24/2015
- Phantom: ELI 4.0; Type: QD OVA 001 BB; Serial: 1057
- ; SEMCAD X Version 14.6.10 (7331)

ICOM IC-F2000D 450-512 MHz Body/Body - Belt Clip Touching, d=0mm, Pin=4W (ES-Probe)/Area Scan (41x181x1): Interpolated grid: dx=1.500 mm, dy=1.500 mm
Maximum value of SAR (interpolated) = 8.13 W/kg

ICOM IC-F2000D 450-512 MHz Body/Body - Belt Clip Touching, d=0mm, Pin=4W (ES-Probe)/Zoom Scan (5x5x7) (6x5x7)/Cube 0: Measurement grid: dx=7.5mm, dy=7.5mm, dz=5mm
Reference Value = 99.05 V/m; Power Drift = -0.36 dB
Peak SAR (extrapolated) = 9.08 W/kg
SAR(1 g) = 6.25 W/kg; SAR(10 g) = 4.5 W/kg (SAR corrected for target medium)
Maximum value of SAR (measured) = 7.98 W/kg

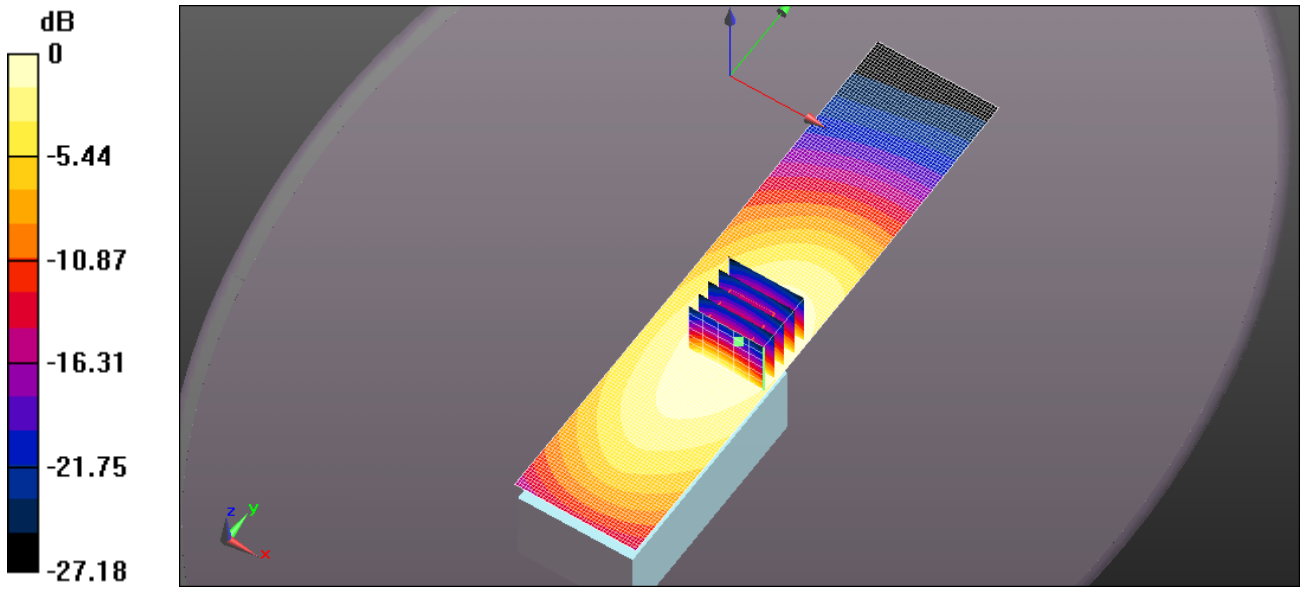

0 dB = 8.13 W/kg = 9.10 dBW/kg

Test Laboratory: Ultratech Group of Labs

FILE NAME: ICOM-409Q BP-280 SC61UC 156MM 450MHZ.DA52:0

DUT: DUT Sample Brick w. Antenna; Type: Sample; Serial: IMEI Number
Program Name: System Performance Check at 450 MHz

Communication System: UID 0, CW (0); Frequency: 450 MHz;Duty Cycle: 1:1
Medium parameters used: f = 450 MHz; σ = 0.903 S/m; ε_r = 55.758; ρ = 1000 kg/m^3
Phantom section: Flat Section

DASY4 Configuration:
- Probe: EX3DV4 - SN3673; ConvF(10.29, 10.29, 10.29); Calibrated: 8/24/2015;
- Sensor-Surface: 1.4mm (Mechanical Surface Detection)
- Electronics: DAE4 Sn874; Calibrated: 8/24/2015
- Phantom: ELI 4.0; Type: QD OVA 001 BB; Serial: 1057
- ; SEMCAD X Version 14.6.10 (7331)

ICOM IC-F2000D 450-512 MHz Body/Body - Belt Clip Touching, d=0mm, Pin=4W (ES-Probe)/Area Scan (41x181x1): Interpolated grid: dx=1.500 mm, dy=1.500 mm
Maximum value of SAR (interpolated) = 9.13 W/kg

ICOM IC-F2000D 450-512 MHz Body/Body - Belt Clip Touching, d=0mm, Pin=4W (ES-Probe)/Zoom Scan (5x5x7) (6x5x7)/Cube 0: Measurement grid: dx=7.5mm, dy=7.5mm, dz=5mm
Reference Value = 95.97 V/m; Power Drift = -0.22 dB
Peak SAR (extrapolated) = 10.3 W/kg
SAR(1 g) = 7.33 W/kg; SAR(10 g) = 5.34 W/kg (SAR corrected for target medium)
Maximum value of SAR (measured) = 9.10 W/kg

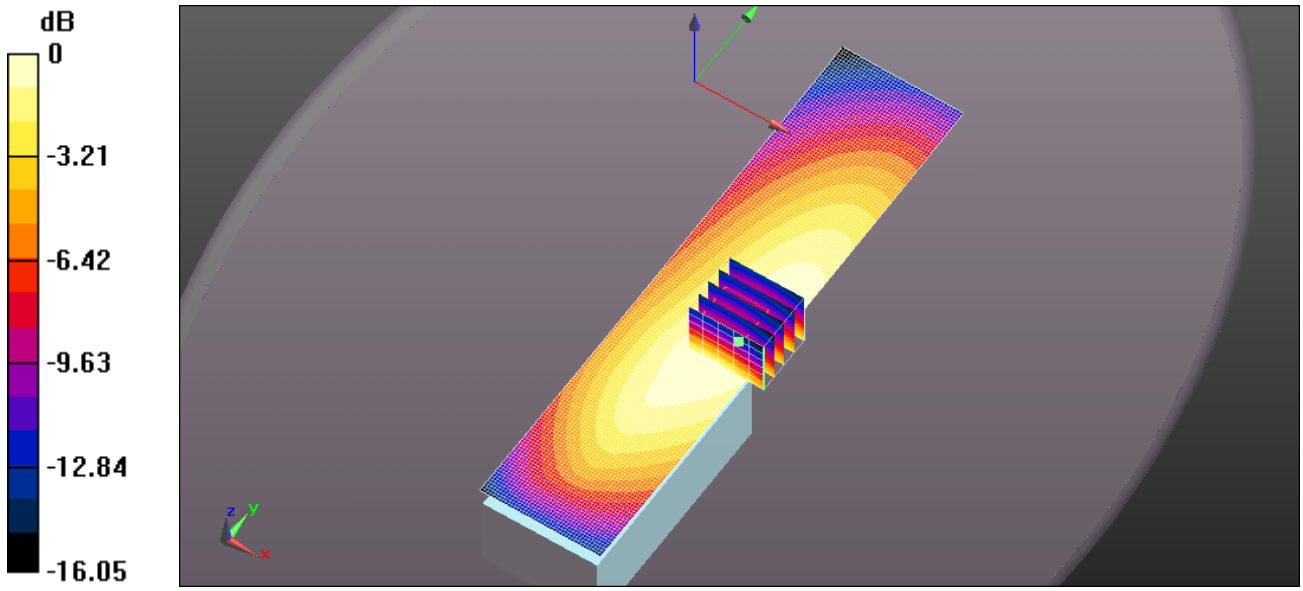

0 dB = 9.13 W/kg = 9.60 dBW/kg

Test Laboratory: Ultratech Group of Labs

FILE NAME: ICOM-409Q BP-280 SC61UC 148MM 450MHZ.DA52:0

DUT: DUT Sample Brick w. Antenna; Type: Sample; Serial: IMEI Number
Program Name: System Performance Check at 450 MHz

Communication System: UID 0, CW (0); Frequency: 450 MHz; Duty Cycle: 1:1
Medium parameters used: f = 450 MHz; σ = 0.903 S/m; ε_r = 55.758; ρ = 1000 kg/m^3
Phantom section: Flat Section

DASY4 Configuration:
- Probe: EX3DV4 - SN3673; ConvF(10.29, 10.29, 10.29); Calibrated: 8/24/2015;
- Sensor-Surface: 1.4mm (Mechanical Surface Detection)
- Electronics: DAE4 Sn874; Calibrated: 8/24/2015
- Phantom: ELI 4.0; Type: QD OVA 001 BB; Serial: 1057
- ; SEMCAD X Version 14.6.10 (7331)

ICOM IC-F2000D 450-512 MHz Body/Body - Belt Clip Touching, d=0mm, Pin=4W (ES-Probe)/Area Scan (41x181x1): Interpolated grid: dx=1.500 mm, dy=1.500 mm
Maximum value of SAR (interpolated) = 8.86 W/kg
ICOM IC-F2000D 450-512 MHz Body/Body - Belt Clip Touching, d=0mm, Pin=4W (ES-Probe)/Zoom Scan (5x5x7) (6x5x7)/Cube 0: Measurement grid: dx=7.5mm, dy=7.5mm, dz=5mm
Reference Value = 93.02 V/m; Power Drift = -0.26 dB
Peak SAR (extrapolated) = 9.79 W/kg
SAR(1 g) = 7.05 W/kg; SAR(10 g) = 5.17 W/kg (SAR corrected for target medium)
Maximum value of SAR (measured) = 8.64 W/kg

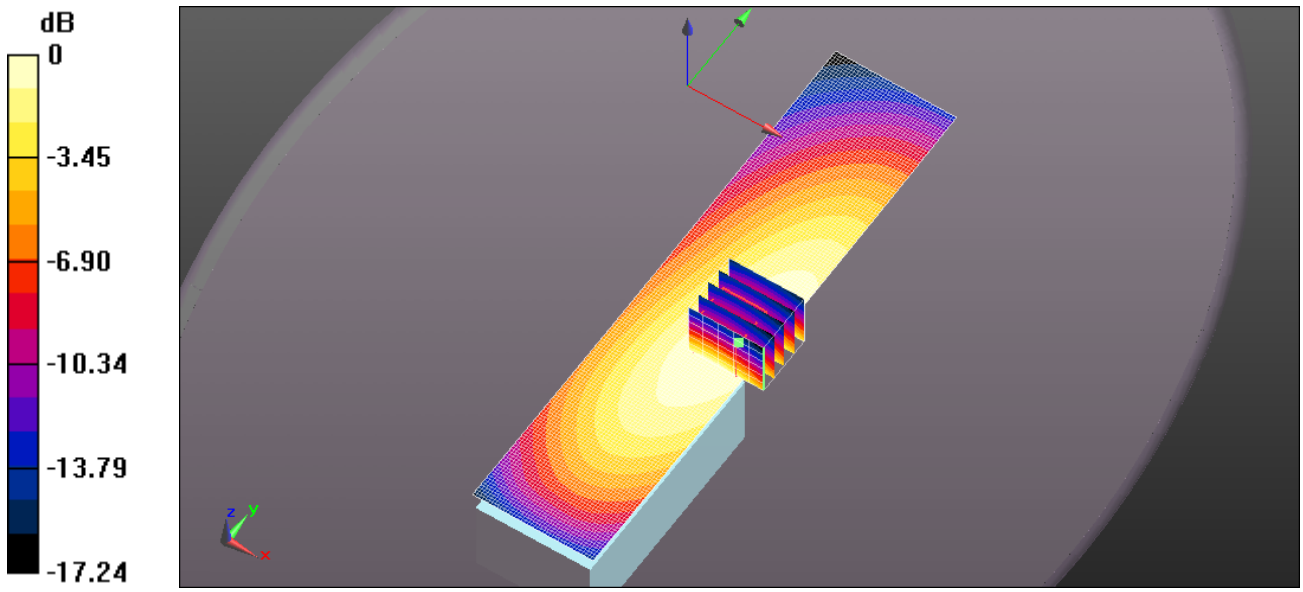

0 dB = 8.86 W/kg = 9.47 dBW/kg

Test Laboratory: Ultratech Group of Labs

FILE NAME: ICOM-409Q BP-280 SC61UC 148MM 465MHZ.DA52:0

DUT: DUT Sample Brick w. Antenna; Type: Sample; Serial: IMEI Number
Program Name: System Performance Check at 450 MHz

Communication System: UID 0, CW (0); Frequency: 465 MHz;Duty Cycle: 1:1
Medium parameters used: f = 465 MHz; σ = 0.923 S/m; ε_r = 55.47; ρ = 1000 kg/m^3
Phantom section: Flat Section

DASY4 Configuration:
- Probe: EX3DV4 - SN3673; ConvF(10.29, 10.29, 10.29); Calibrated: 8/24/2015;
- Sensor-Surface: 1.4mm (Mechanical Surface Detection)
- Electronics: DAE4 Sn874; Calibrated: 8/24/2015
- Phantom: ELI 4.0; Type: QD OVA 001 BB; Serial: 1057
- ; SEMCAD X Version 14.6.10 (7331)

ICOM IC-F2000D 450-512 MHz Body/Body - Belt Clip Touching, d=0mm, Pin=4W (ES-Probe)/Area Scan (41x181x1): Interpolated grid: dx=1.500 mm, dy=1.500 mm
Maximum value of SAR (interpolated) = 10.4 W/kg

ICOM IC-F2000D 450-512 MHz Body/Body - Belt Clip Touching, d=0mm, Pin=4W (ES-Probe)/Zoom Scan (5x5x7) (6x5x7)/Cube 0: Measurement grid: dx=7.5mm, dy=7.5mm, dz=5mm
Reference Value = 99.12 V/m; Power Drift = -0.29 dB
Peak SAR (extrapolated) = 11.5 W/kg
SAR(1 g) = 8.02 W/kg; SAR(10 g) = 5.87 W/kg (SAR corrected for target medium)
Maximum value of SAR (measured) = 10.2 W/kg

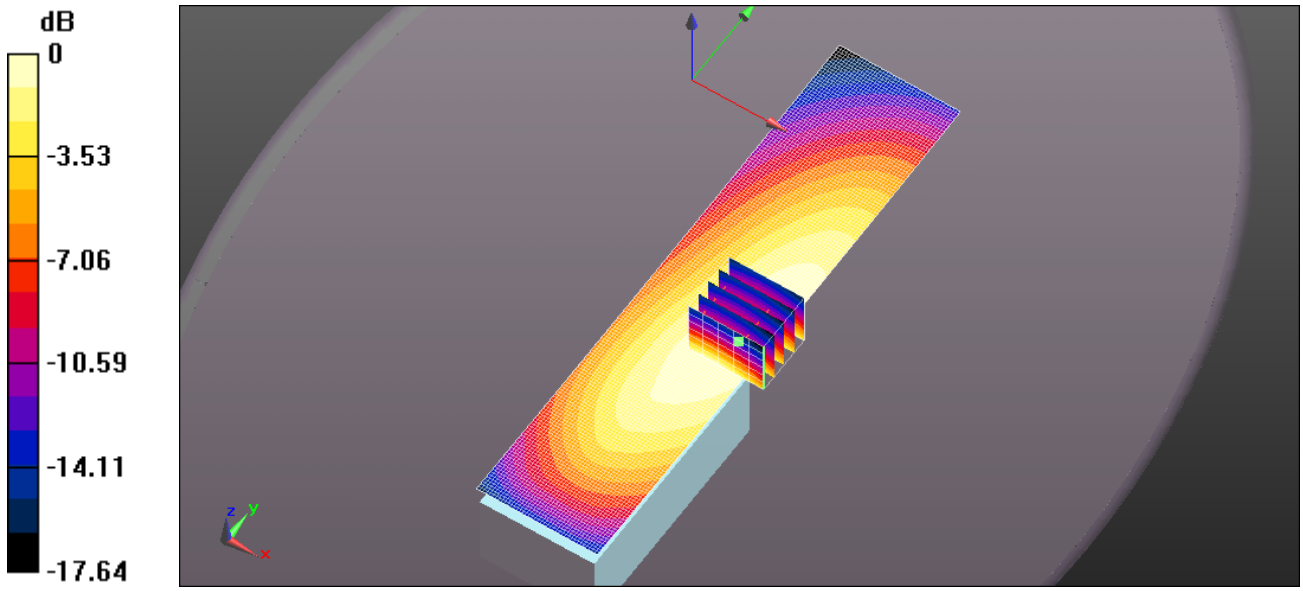

0 dB = 10.4 W/kg = 10.19 dBW/kg

Test Laboratory: Ultratech Group of Labs

FILE NAME: ICOM-409Q BP-280 SC61UC 148MM 475.2MHZ.DA52:0

DUT: DUT Sample Brick w. Antenna; Type: Sample; Serial: IMEI Number
Program Name: System Performance Check at 450 MHz

Communication System: UID 0, CW (0); Frequency: 475.2 MHz;Duty Cycle: 1:1
Medium parameters used (interpolated): f = 475.2 MHz; σ = 0.939 S/m; ε_r = 55.29; ρ = 1000 kg/m^3
Phantom section: Flat Section

DASY4 Configuration:
- Probe: EX3DV4 - SN3673; ConvF(10.29, 10.29, 10.29); Calibrated: 8/24/2015;
- Sensor-Surface: 1.4mm (Mechanical Surface Detection)
- Electronics: DAE4 Sn874; Calibrated: 8/24/2015
- Phantom: ELI 4.0; Type: QD OVA 001 BB; Serial: 1057
- ; SEMCAD X Version 14.6.10 (7331)

ICOM IC-F2000D 450-512 MHz Body/Body - Belt Clip Touching, d=0mm, Pin=4W (ES-Probe)/Area Scan (41x181x1): Interpolated grid: dx=1.500 mm, dy=1.500 mm
Maximum value of SAR (interpolated) = 10.9 W/kg

ICOM IC-F2000D 450-512 MHz Body/Body - Belt Clip Touching, d=0mm, Pin=4W (ES-Probe)/Zoom Scan (5x5x7) (6x5x7)/Cube 0: Measurement grid: dx=7.5mm, dy=7.5mm, dz=5mm
Reference Value = 103.1 V/m; Power Drift = -0.37 dB
Peak SAR (extrapolated) = 12.1 W/kg
SAR(1 g) = 8.3 W/kg; SAR(10 g) = 6.05 W/kg (SAR corrected for target medium)
Maximum value of SAR (measured) = 10.6 W/kg

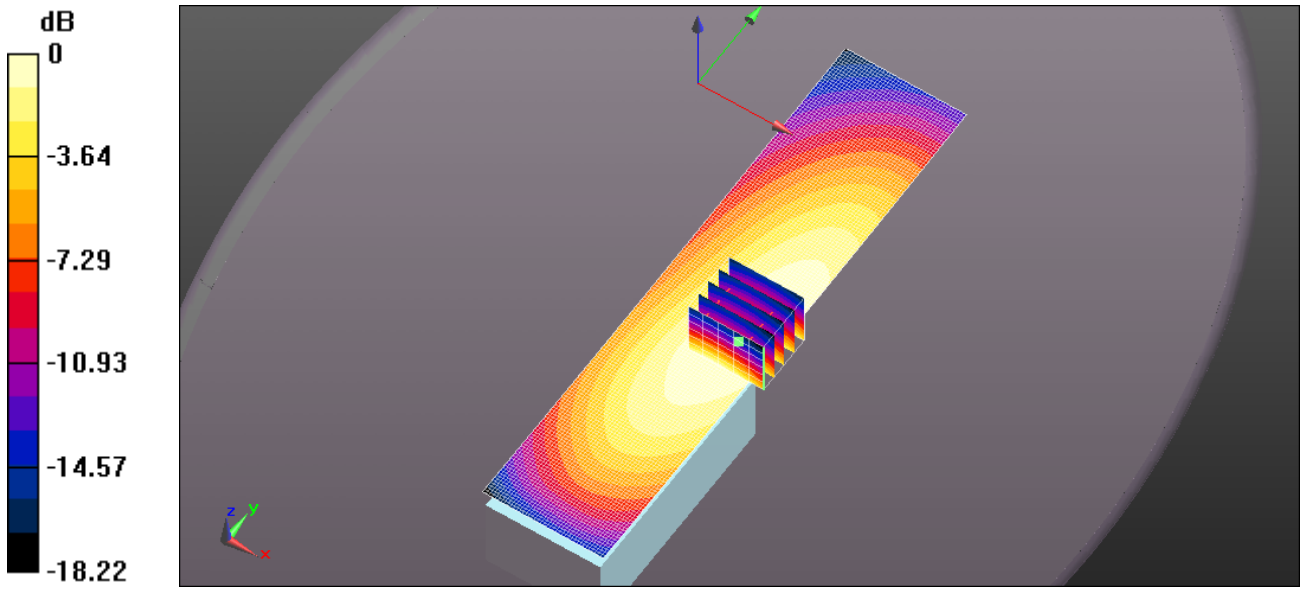

0 dB = 10.9 W/kg = 10.37 dBW/kg

Test Laboratory: Ultratech Group of Labs

FILE NAME: ICOM-409Q BP-279 SC61UC 148MM 475.2MHZ.DA52:0

DUT: DUT Sample Brick w. Antenna; Type: Sample; Serial: IMEI Number
Program Name: System Performance Check at 450 MHz

Communication System: UID 0, CW (0); Frequency: 475.2 MHz;Duty Cycle: 1:1
Medium parameters used (interpolated): f = 475.2 MHz; σ = 0.939 S/m; ε_r = 55.29; ρ = 1000 kg/m^3
Phantom section: Flat Section

DASY4 Configuration:
- Probe: EX3DV4 - SN3673; ConvF(10.29, 10.29, 10.29); Calibrated: 8/24/2015;
- Sensor-Surface: 1.4mm (Mechanical Surface Detection)
- Electronics: DAE4 Sn874; Calibrated: 8/24/2015
- Phantom: ELI 4.0; Type: QD OVA 001 BB; Serial: 1057
- ; SEMCAD X Version 14.6.10 (7331)

ICOM IC-F2000D 450-512 MHz Body/Body - Belt Clip Touching, d=0mm, Pin=4W (ES-Probe)/Area Scan (41x181x1): Interpolated grid: dx=1.500 mm, dy=1.500 mm
Maximum value of SAR (interpolated) = 10.7 W/kg
ICOM IC-F2000D 450-512 MHz Body/Body - Belt Clip Touching, d=0mm, Pin=4W (ES-Probe)/Zoom Scan (5x5x7) (6x5x7)/Cube 0: Measurement grid: dx=7.5mm, dy=7.5mm, dz=5mm
Reference Value = 104.1 V/m; Power Drift = -0.37 dB
Peak SAR (extrapolated) = 11.6 W/kg
SAR(1 g) = 8.04 W/kg; SAR(10 g) = 5.86 W/kg (SAR corrected for target medium)
Maximum value of SAR (measured) = 10.3 W/kg

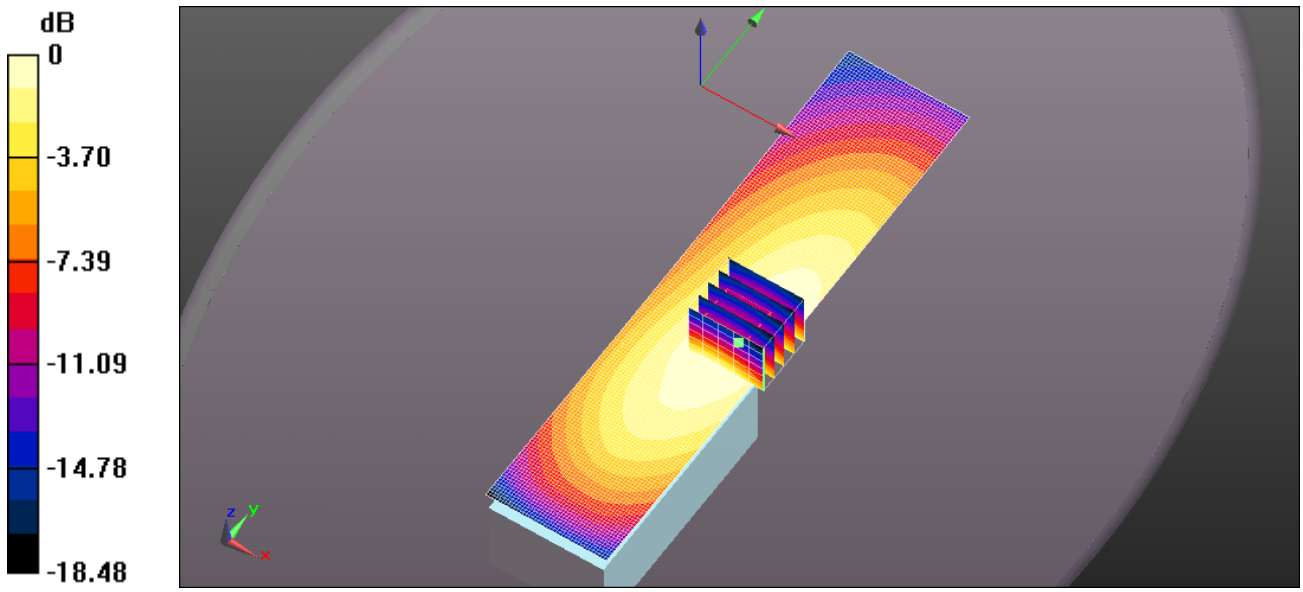

0 dB = 10.7 W/kg = 10.29 dBW/kg

Test Laboratory: Ultratech Group of Labs

FILE NAME: ICOM-409Q BP-278 SC61UC 148MM 475.2MHZ.DA52:0

DUT: DUT Sample Brick w. Antenna; Type: Sample; Serial: IMEI Number
Program Name: System Performance Check at 450 MHz

Communication System: UID 0, CW (0); Frequency: 475.2 MHz;Duty Cycle: 1:1
Medium parameters used (interpolated): f = 475.2 MHz; σ = 0.939 S/m; ε_r = 55.29; ρ = 1000 kg/m^3
Phantom section: Flat Section

DASY4 Configuration:
- Probe: EX3DV4 - SN3673; ConvF(10.29, 10.29, 10.29); Calibrated: 8/24/2015;
- Sensor-Surface: 1.4mm (Mechanical Surface Detection)
- Electronics: DAE4 Sn874; Calibrated: 8/24/2015
- Phantom: ELI 4.0; Type: QD OVA 001 BB; Serial: 1057
- ; SEMCAD X Version 14.6.10 (7331)

ICOM IC-F2000D 450-512 MHz Body/Body - Belt Clip Touching, d=0mm, Pin=4W (ES-Probe)/Area Scan (41x181x1): Interpolated grid: dx=1.500 mm, dy=1.500 mm
Maximum value of SAR (interpolated) = 9.99 W/kg
ICOM IC-F2000D 450-512 MHz Body/Body - Belt Clip Touching, d=0mm, Pin=4W (ES-Probe)/Zoom Scan (5x5x7) (6x5x7)/Cube 0: Measurement grid: dx=7.5mm, dy=7.5mm, dz=5mm
Reference Value = 98.42 V/m; Power Drift = -0.34 dB
Peak SAR (extrapolated) = 10.7 W/kg
SAR(1 g) = 7.34 W/kg; SAR(10 g) = 5.32 W/kg (SAR corrected for target medium)
Maximum value of SAR (measured) = 9.41 W/kg

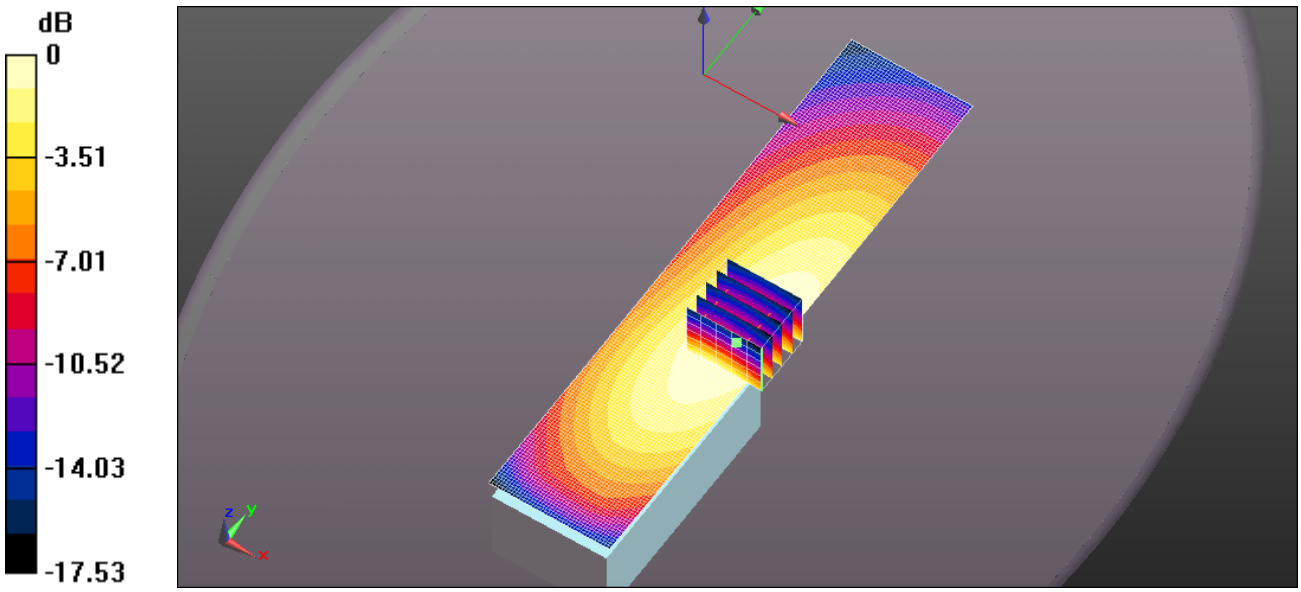

0 dB = 9.99 W/kg = 10.00 dBW/kg

Test Laboratory: Ultratech Group of Labs

FILE NAME: ICOM-409Q BP-280 SC61UC 142MM 450MHZ.DA52:0

DUT: DUT Sample Brick w. Antenna; Type: Sample; Serial: IMEI Number
Program Name: System Performance Check at 450 MHz

Communication System: UID 0, CW (0); Frequency: 450 MHz;Duty Cycle: 1:1
Medium parameters used: f = 450 MHz; σ = 0.903 S/m; ε_r = 55.758; ρ = 1000 kg/m^3
Phantom section: Flat Section

DASY4 Configuration:
- Probe: EX3DV4 - SN3673; ConvF(10.29, 10.29, 10.29); Calibrated: 8/24/2015;
- Sensor-Surface: 1.4mm (Mechanical Surface Detection)
- Electronics: DAE4 Sn874; Calibrated: 8/24/2015
- Phantom: ELI 4.0; Type: QD OVA 001 BB; Serial: 1057
- ; SEMCAD X Version 14.6.10 (7331)

ICOM IC-F2000D 450-512 MHz Body/Body - Belt Clip Touching, d=0mm, Pin=4W (ES-Probe)/Area Scan (41x181x1): Interpolated grid: dx=1.500 mm, dy=1.500 mm
Maximum value of SAR (interpolated) = 7.23 W/kg
ICOM IC-F2000D 450-512 MHz Body/Body - Belt Clip Touching, d=0mm, Pin=4W (ES-Probe)/Zoom Scan (5x5x7) (6x5x7)/Cube 0: Measurement grid: dx=7.5mm, dy=7.5mm, dz=5mm
Reference Value = 10.93 V/m; Power Drift = -0.01 dB
Peak SAR (extrapolated) = 8.21 W/kg
SAR(1 g) = 5.83 W/kg; SAR(10 g) = 4.23 W/kg (SAR corrected for target medium)
Maximum value of SAR (measured) = 7.23 W/kg

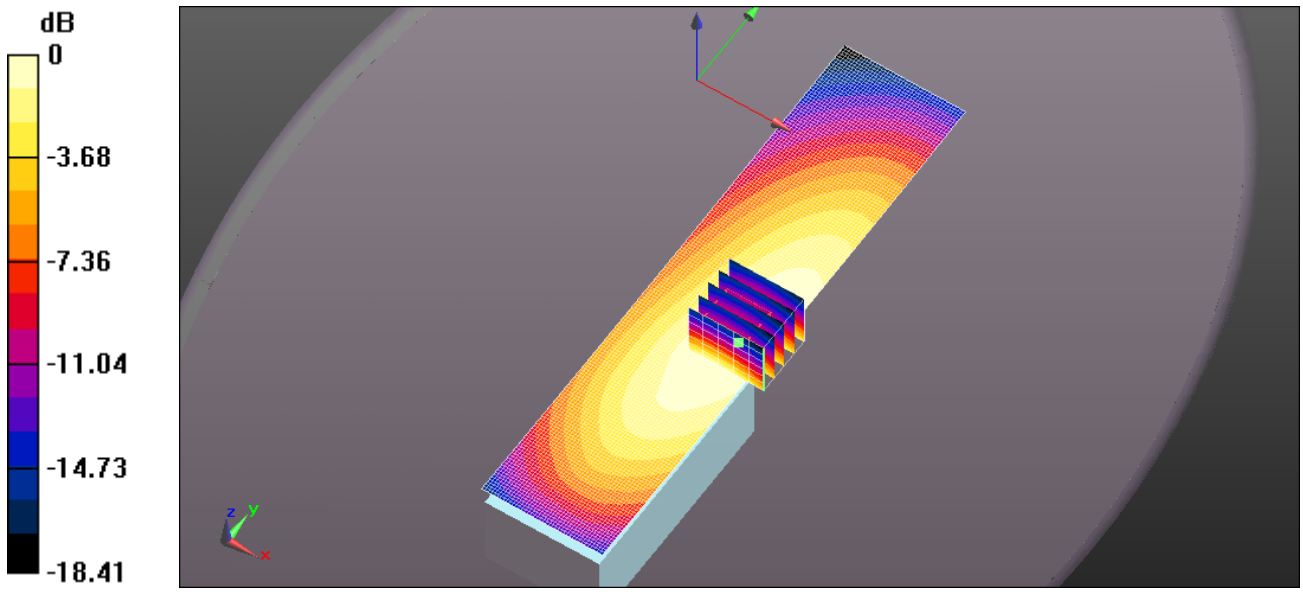

0 dB = 7.23 W/kg = 8.59 dBW/kg

Test Laboratory: Ultratech Group of Labs

FILE NAME: ICOM-409Q BP-280 SC61UC 142MM 465MHZ.DA52:0

DUT: DUT Sample Brick w. Antenna; Type: Sample; Serial: IMEI Number
Program Name: System Performance Check at 450 MHz

Communication System: UID 0, CW (0); Frequency: 465 MHz;Duty Cycle: 1:1
Medium parameters used: f = 465 MHz; σ = 0.923 S/m; ε_r = 55.47; ρ = 1000 kg/m^3
Phantom section: Flat Section

DASY4 Configuration:
- Probe: EX3DV4 - SN3673; ConvF(10.29, 10.29, 10.29); Calibrated: 8/24/2015;
- Sensor-Surface: 1.4mm (Mechanical Surface Detection)
- Electronics: DAE4 Sn874; Calibrated: 8/24/2015
- Phantom: ELI 4.0; Type: QD OVA 001 BB; Serial: 1057
- ; SEMCAD X Version 14.6.10 (7331)

ICOM IC-F2000D 450-512 MHz Body/Body - Belt Clip Touching, d=0mm, Pin=4W (ES-Probe)/Area Scan (41x181x1): Interpolated grid: dx=1.500 mm, dy=1.500 mm
Maximum value of SAR (interpolated) = 9.12 W/kg
ICOM IC-F2000D 450-512 MHz Body/Body - Belt Clip Touching, d=0mm, Pin=4W (ES-Probe)/Zoom Scan (5x5x7) (6x5x7)/Cube 0: Measurement grid: dx=7.5mm, dy=7.5mm, dz=5mm
Reference Value = 95.52 V/m; Power Drift = -0.24 dB
Peak SAR (extrapolated) = 10.3 W/kg
SAR(1 g) = 7.1 W/kg; SAR(10 g) = 5.16 W/kg (SAR corrected for target medium)
Maximum value of SAR (measured) = 9.08 W/kg

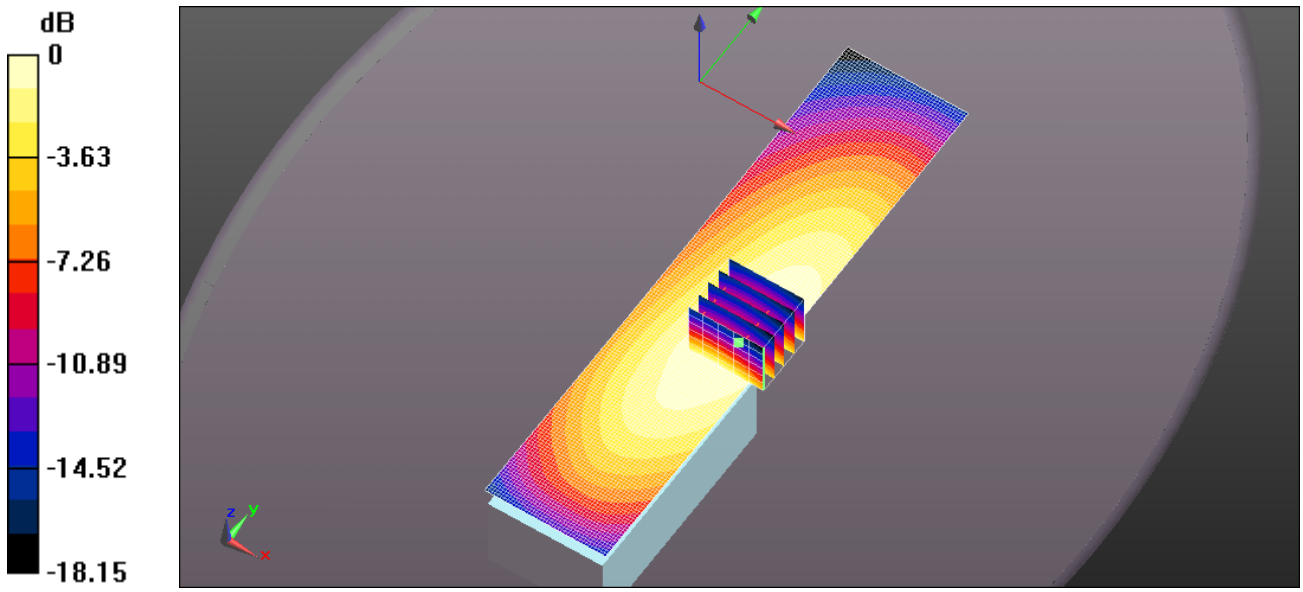

0 dB = 9.12 W/kg = 9.60 dBW/kg

Test Laboratory: Ultratech Group of Labs

FILE NAME: ICOM-409Q BP-280 SC61UC 142MM 484MHZ.DA52:0

DUT: DUT Sample Brick w. Antenna; Type: Sample; Serial: IMEI Number
Program Name: System Performance Check at 450 MHz

Communication System: UID 0, CW (0); Frequency: 484 MHz; Duty Cycle: 1:1
Medium parameters used (interpolated): f = 484 MHz; σ = 0.95 S/m; ε_r = 55.179; ρ = 1000 kg/m^3
Phantom section: Flat Section

DASY4 Configuration:
- Probe: EX3DV4 - SN3673; ConvF(10.29, 10.29, 10.29); Calibrated: 8/24/2015;
- Sensor-Surface: 1.4mm (Mechanical Surface Detection)
- Electronics: DAE4 Sn874; Calibrated: 8/24/2015
- Phantom: ELI 4.0; Type: QD OVA 001 BB; Serial: 1057
- ; SEMCAD X Version 14.6.10 (7331)

ICOM IC-F2000D 450-512 MHz Body/Body - Belt Clip Touching, d=0mm, Pin=4W (ES-Probe)/Area Scan (41x181x1): Interpolated grid: dx=1.500 mm, dy=1.500 mm
Maximum value of SAR (interpolated) = 12.0 W/kg
ICOM IC-F2000D 450-512 MHz Body/Body - Belt Clip Touching, d=0mm, Pin=4W (ES-Probe)/Zoom Scan (5x5x7) (6x5x7)/Cube 0: Measurement grid: dx=7.5mm, dy=7.5mm, dz=5mm
Reference Value = 109.2 V/m; Power Drift = -0.37 dB
Peak SAR (extrapolated) = 13.3 W/kg
SAR(1 g) = 9.09 W/kg; SAR(10 g) = 6.57 W/kg (SAR corrected for target medium)
Maximum value of SAR (measured) = 11.7 W/kg

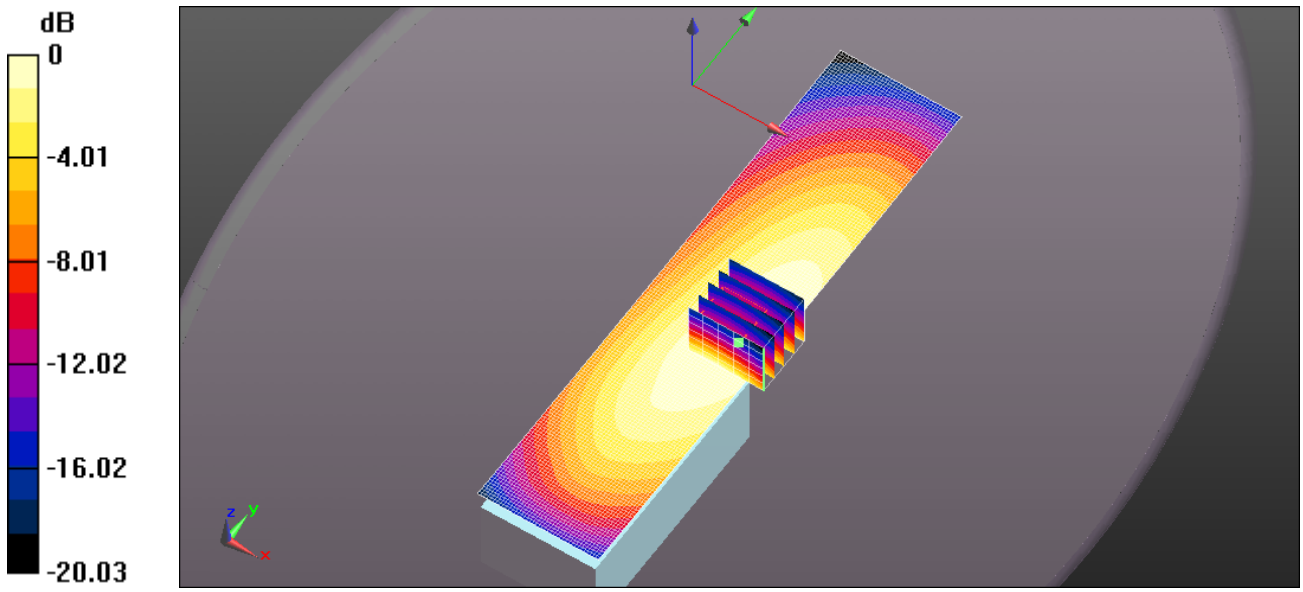

0 dB = 12.0 W/kg = 10.79 dBW/kg

Test Laboratory: Ultratech Group of Labs

FILE NAME: ICOM-409Q BP-280 SC61UC 142MM 496MHZ.DA52:0

DUT: DUT Sample Brick w. Antenna; Type: Sample; Serial: IMEI Number
Program Name: System Performance Check at 450 MHz

Communication System: UID 0, CW (0); Frequency: 496 MHz;Duty Cycle: 1:1
Medium parameters used (interpolated): f = 496 MHz; σ = 0.962 S/m; ε_r = 55.155; ρ = 1000 kg/m^3
Phantom section: Flat Section

DASY4 Configuration:
- Probe: EX3DV4 - SN3673; ConvF(10.29, 10.29, 10.29); Calibrated: 8/24/2015;
- Sensor-Surface: 1.4mm (Mechanical Surface Detection)
- Electronics: DAE4 Sn874; Calibrated: 8/24/2015
- Phantom: ELI 4.0; Type: QD OVA 001 BB; Serial: 1057
- ; SEMCAD X Version 14.6.10 (7331)

ICOM IC-F2000D 450-512 MHz Body/Body - Belt Clip Touching, d=0mm, Pin=4W (ES-Probe)/Area Scan (41x181x1): Interpolated grid: dx=1.500 mm, dy=1.500 mm
Maximum value of SAR (interpolated) = 13.3 W/kg
ICOM IC-F2000D 450-512 MHz Body/Body - Belt Clip Touching, d=0mm, Pin=4W (ES-Probe)/Zoom Scan (5x5x7) (6x5x7)/Cube 0: Measurement grid: dx=7.5mm, dy=7.5mm, dz=5mm
Reference Value = 111.1 V/m; Power Drift = -0.41 dB
Peak SAR (extrapolated) = 14.1 W/kg
SAR(1 g) = 9.68 W/kg; SAR(10 g) = 7.01 W/kg (SAR corrected for target medium)
Maximum value of SAR (measured) = 12.4 W/kg

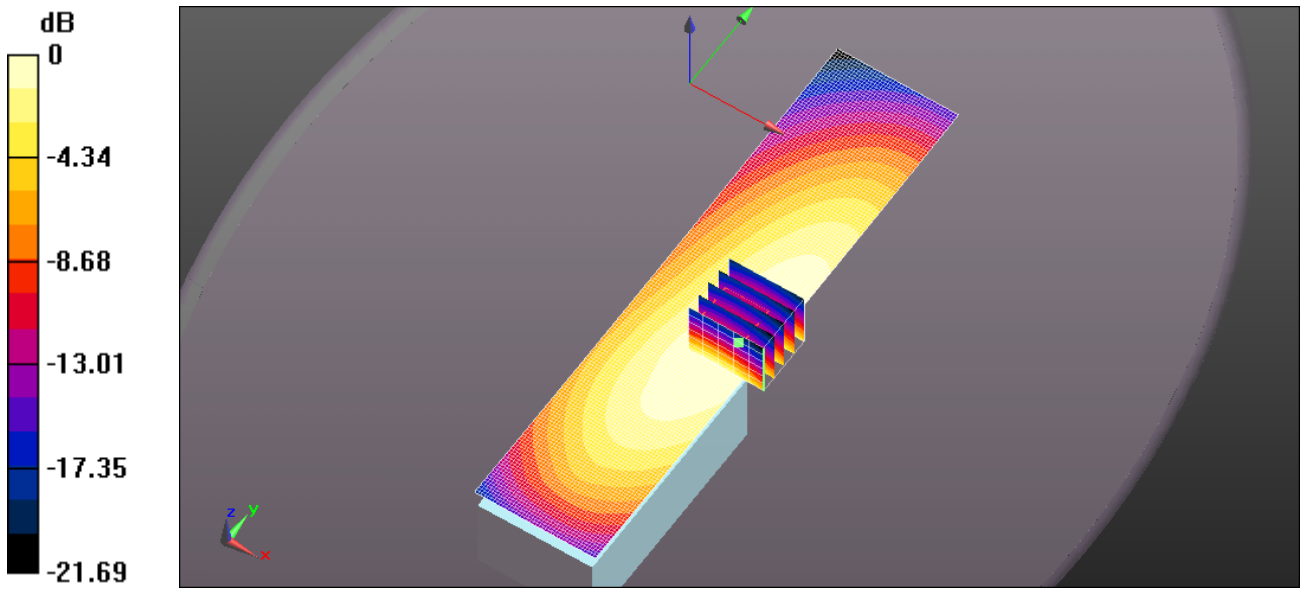

0 dB = 13.3 W/kg = 11.24 dBW/kg

Test Laboratory: Ultratech Group of Labs

FILE NAME: ICOM-409Q BP-279 SC61UC 142MM 496MHZ.DA52:0

DUT: DUT Sample Brick w. Antenna; Type: Sample; Serial: IMEI Number
Program Name: System Performance Check at 450 MHz

Communication System: UID 0, CW (0); Frequency: 496 MHz;Duty Cycle: 1:1
Medium parameters used (interpolated): f = 496 MHz; σ = 0.962 S/m; ε_r = 55.155; ρ = 1000 kg/m^3
Phantom section: Flat Section

DASY4 Configuration:
- Probe: EX3DV4 - SN3673; ConvF(10.29, 10.29, 10.29); Calibrated: 8/24/2015;
- Sensor-Surface: 1.4mm (Mechanical Surface Detection)
- Electronics: DAE4 Sn874; Calibrated: 8/24/2015
- Phantom: ELI 4.0; Type: QD OVA 001 BB; Serial: 1057
- ; SEMCAD X Version 14.6.10 (7331)

ICOM IC-F2000D 450-512 MHz Body/Body - Belt Clip Touching, d=0mm, Pin=4W (ES-Probe)/Area Scan (41x181x1): Interpolated grid: dx=1.500 mm, dy=1.500 mm
Maximum value of SAR (interpolated) = 13.2 W/kg
ICOM IC-F2000D 450-512 MHz Body/Body - Belt Clip Touching, d=0mm, Pin=4W (ES-Probe)/Zoom Scan (5x5x7) (6x5x7)/Cube 0: Measurement grid: dx=7.5mm, dy=7.5mm, dz=5mm
Reference Value = 119.1 V/m; Power Drift = -0.40 dB
Peak SAR (extrapolated) = 13.0 W/kg
SAR(1 g) = 9.04 W/kg; SAR(10 g) = 6.59 W/kg (SAR corrected for target medium)
Maximum value of SAR (measured) = 11.5 W/kg

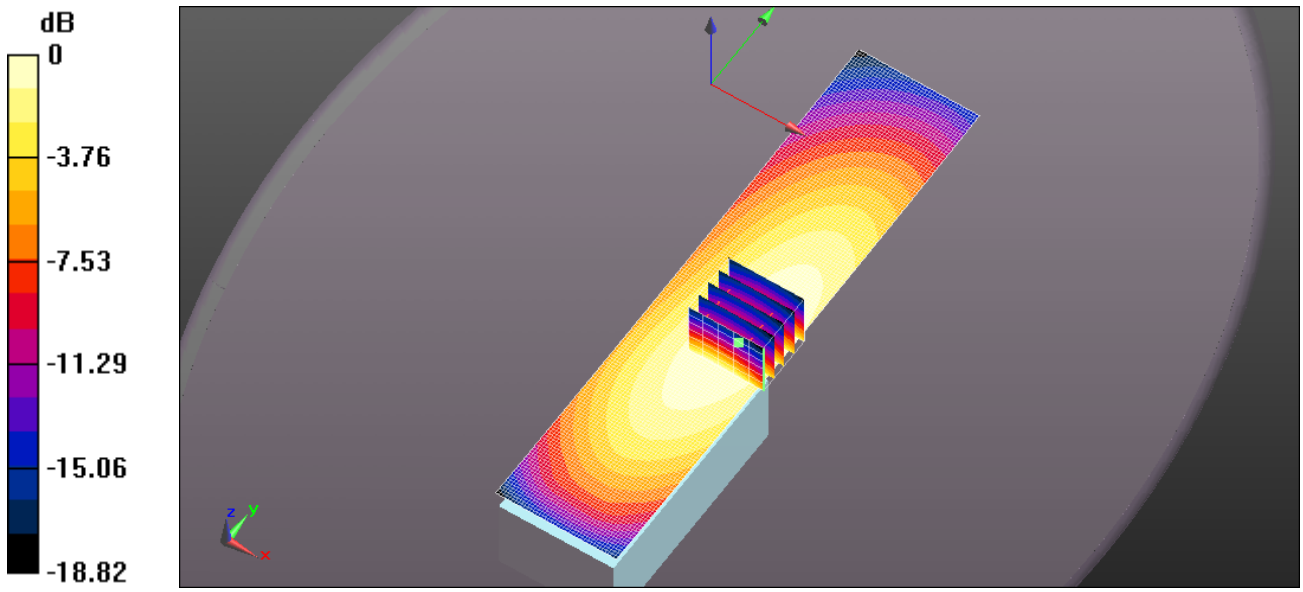

0 dB = 13.2 W/kg = 11.20 dBW/kg

Test Laboratory: Ultratech Group of Labs

FILE NAME: ICOM-409Q BP-278 SC61UC 142MM 496MHZ.DA52:0

DUT: DUT Sample Brick w. Antenna; Type: Sample; Serial: IMEI Number
Program Name: System Performance Check at 450 MHz

Communication System: UID 0, CW (0); Frequency: 496 MHz;Duty Cycle: 1:1
Medium parameters used (interpolated): f = 496 MHz; σ = 0.962 S/m; ε_r = 55.155; ρ = 1000 kg/m^3
Phantom section: Flat Section

DASY4 Configuration:
- Probe: EX3DV4 - SN3673; ConvF(10.29, 10.29, 10.29); Calibrated: 8/24/2015;
- Sensor-Surface: 1.4mm (Mechanical Surface Detection)
- Electronics: DAE4 Sn874; Calibrated: 8/24/2015
- Phantom: ELI 4.0; Type: QD OVA 001 BB; Serial: 1057
- ; SEMCAD X Version 14.6.10 (7331)

ICOM IC-F2000D 450-512 MHz Body/Body - Belt Clip Touching, d=0mm, Pin=4W (ES-Probe)/Area Scan (41x181x1): Interpolated grid: dx=1.500 mm, dy=1.500 mm
Maximum value of SAR (interpolated) = 11.6 W/kg
ICOM IC-F2000D 450-512 MHz Body/Body - Belt Clip Touching, d=0mm, Pin=4W (ES-Probe)/Zoom Scan (5x5x7) (6x5x7)/Cube 0: Measurement grid: dx=7.5mm, dy=7.5mm, dz=5mm
Reference Value = 12.36 V/m; Power Drift = -0.33 dB
Peak SAR (extrapolated) = 10.9 W/kg
SAR(1 g) = 7.45 W/kg; SAR(10 g) = 5.38 W/kg (SAR corrected for target medium)
Maximum value of SAR (measured) = 9.58 W/kg

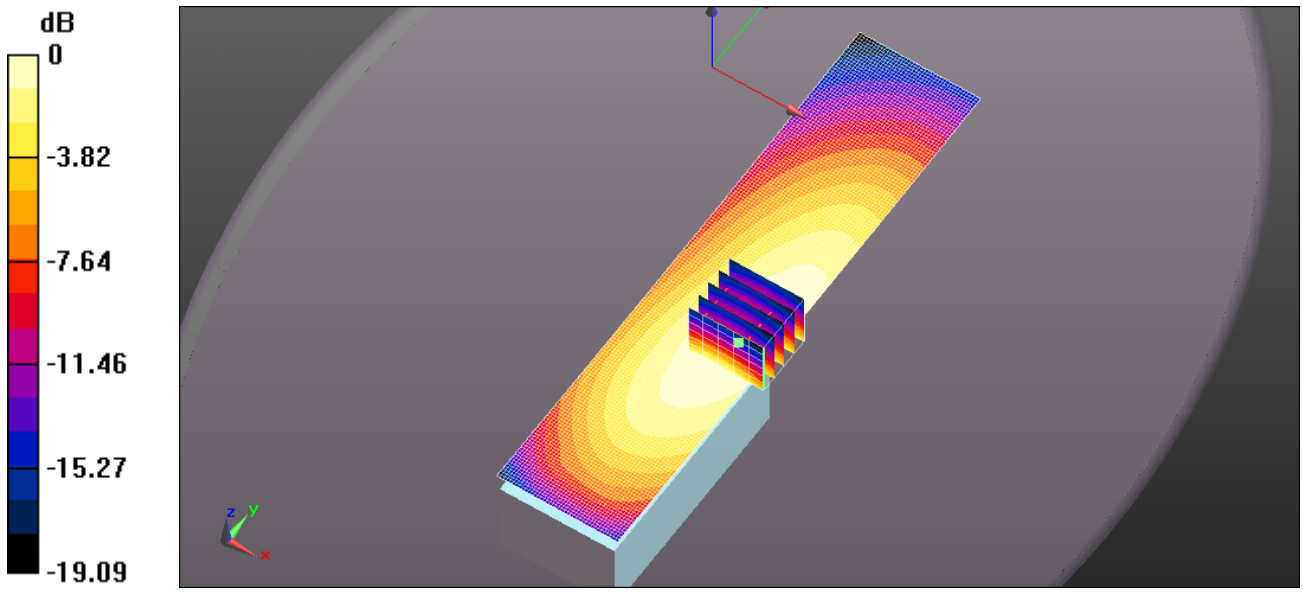

0 dB = 11.6 W/kg = 10.63 dBW/kg

Test Laboratory: Ultratech Group of Labs

FILE NAME: ICOM-409Q BP-280 SC61UC 136MM 465MHZ.DA52:0

DUT: DUT Sample Brick w. Antenna; Type: Sample; Serial: IMEI Number
Program Name: System Performance Check at 450 MHz

Communication System: UID 0, CW (0); Frequency: 465 MHz;Duty Cycle: 1:1
Medium parameters used: f = 465 MHz; σ = 0.923 S/m; ε_r = 55.47; ρ = 1000 kg/m^3
Phantom section: Flat Section

DASY4 Configuration:
- Probe: EX3DV4 - SN3673; ConvF(10.29, 10.29, 10.29); Calibrated: 8/24/2015;
- Sensor-Surface: 1.4mm (Mechanical Surface Detection)
- Electronics: DAE4 Sn874; Calibrated: 8/24/2015
- Phantom: ELI 4.0; Type: QD OVA 001 BB; Serial: 1057
- ; SEMCAD X Version 14.6.10 (7331)

ICOM IC-F2000D 450-512 MHz Body/Body - Belt Clip Touching, d=0mm, Pin=4W (ES-Probe)/Area Scan (41x181x1): Interpolated grid: dx=1.500 mm, dy=1.500 mm
Maximum value of SAR (interpolated) = 6.78 W/kg
ICOM IC-F2000D 450-512 MHz Body/Body - Belt Clip Touching, d=0mm, Pin=4W (ES-Probe)/Zoom Scan (5x5x7) (6x5x7)/Cube 0: Measurement grid: dx=7.5mm, dy=7.5mm, dz=5mm
Reference Value = 77.60 V/m; Power Drift = -0.17 dB
Peak SAR (extrapolated) = 7.62 W/kg
SAR(1 g) = 5.26 W/kg; SAR(10 g) = 3.82 W/kg (SAR corrected for target medium)
Maximum value of SAR (measured) = 6.73 W/kg

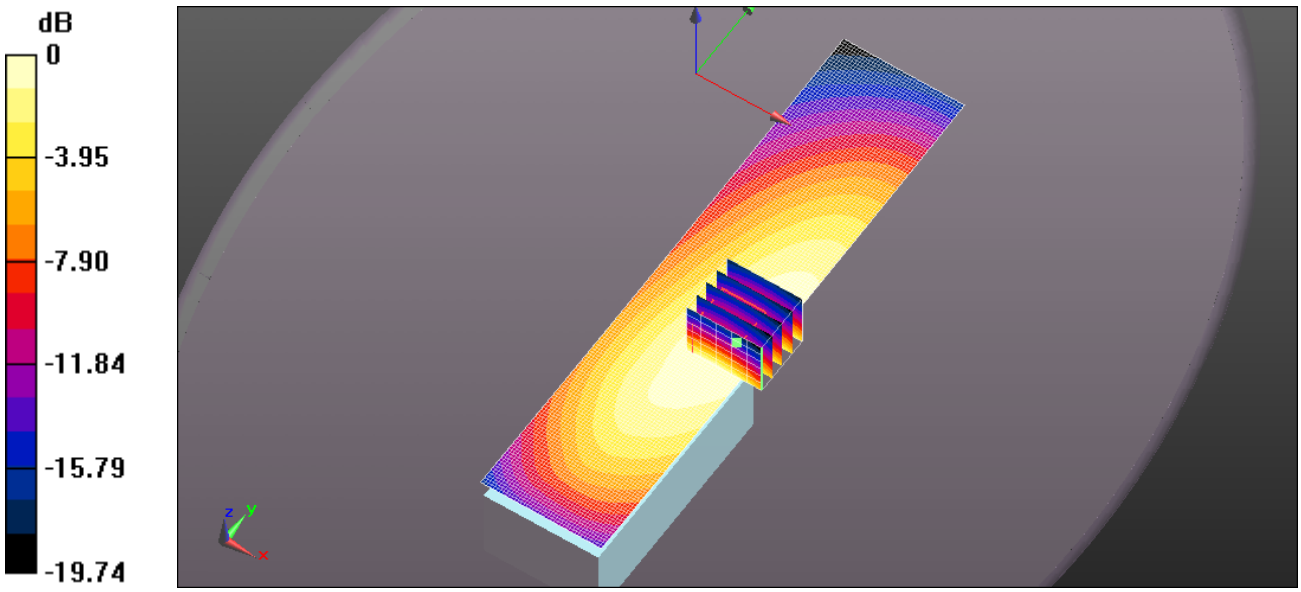

0 dB = 6.78 W/kg = 8.31 dBW/kg

Test Laboratory: Ultratech Group of Labs

FILE NAME: ICOM-409Q BP-280 SC61UC 136MM 484MHZ.DA52:0

DUT: DUT Sample Brick w. Antenna; Type: Sample; Serial: IMEI Number
Program Name: System Performance Check at 450 MHz

Communication System: UID 0, CW (0); Frequency: 484 MHz;Duty Cycle: 1:1
Medium parameters used (interpolated): f = 484 MHz; σ = 0.95 S/m; ε_r = 55.179; ρ = 1000 kg/m^3
Phantom section: Flat Section

DASY4 Configuration:
- Probe: EX3DV4 - SN3673; ConvF(10.29, 10.29, 10.29); Calibrated: 8/24/2015;
- Sensor-Surface: 1.4mm (Mechanical Surface Detection)
- Electronics: DAE4 Sn874; Calibrated: 8/24/2015
- Phantom: ELI 4.0; Type: QD OVA 001 BB; Serial: 1057
- ; SEMCAD X Version 14.6.10 (7331)

ICOM IC-F2000D 450-512 MHz Body/Body - Belt Clip Touching, d=0mm, Pin=4W (ES-Probe)/Area Scan (41x181x1): Interpolated grid: dx=1.500 mm, dy=1.500 mm
Maximum value of SAR (interpolated) = 9.02 W/kg
ICOM IC-F2000D 450-512 MHz Body/Body - Belt Clip Touching, d=0mm, Pin=4W (ES-Probe)/Zoom Scan (5x5x7) (6x5x7)/Cube 0: Measurement grid: dx=7.5mm, dy=7.5mm, dz=5mm
Reference Value = 89.78 V/m; Power Drift = -0.20 dB
Peak SAR (extrapolated) = 10.2 W/kg
SAR(1 g) = 7.02 W/kg; SAR(10 g) = 5.09 W/kg (SAR corrected for target medium)
Maximum value of SAR (measured) = 8.99 W/kg

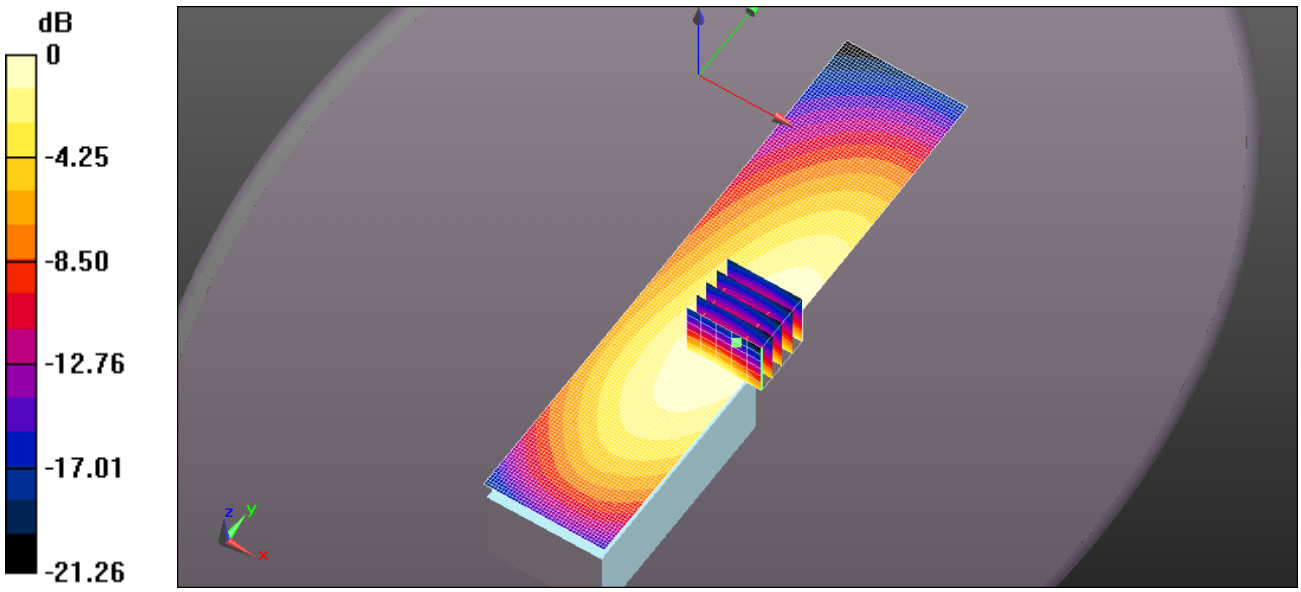

0 dB = 9.02 W/kg = 9.55 dBW/kg

Test Laboratory: Ultratech Group of Labs

FILE NAME: ICOM-409Q BP-280 SC61UC 136MM 496MHZ.DA52:0

DUT: DUT Sample Brick w. Antenna; Type: Sample; Serial: IMEI Number
Program Name: System Performance Check at 450 MHz

Communication System: UID 0, CW (0); Frequency: 496 MHz;Duty Cycle: 1:1
Medium parameters used (interpolated): f = 496 MHz; σ = 0.962 S/m; ε_r = 55.155; ρ = 1000 kg/m^3
Phantom section: Flat Section

DASY4 Configuration:
- Probe: EX3DV4 - SN3673; ConvF(10.29, 10.29, 10.29); Calibrated: 8/24/2015;
- Sensor-Surface: 1.4mm (Mechanical Surface Detection)
- Electronics: DAE4 Sn874; Calibrated: 8/24/2015
- Phantom: ELI 4.0; Type: QD OVA 001 BB; Serial: 1057
- ; SEMCAD X Version 14.6.10 (7331)

ICOM IC-F2000D 450-512 MHz Body/Body - Belt Clip Touching, d=0mm, Pin=4W (ES-Probe)/Area Scan (41x181x1): Interpolated grid: dx=1.500 mm, dy=1.500 mm
Maximum value of SAR (interpolated) = 14.6 W/kg
ICOM IC-F2000D 450-512 MHz Body/Body - Belt Clip Touching, d=0mm, Pin=4W (ES-Probe)/Zoom Scan (5x5x7) (6x5x7)/Cube 0: Measurement grid: dx=7.5mm, dy=7.5mm, dz=5mm
Reference Value = 117.2 V/m; Power Drift = -0.36 dB
Peak SAR (extrapolated) = 16.3 W/kg
SAR(1 g) = 11.2 W/kg; SAR(10 g) = 8.09 W/kg (SAR corrected for target medium)
Maximum value of SAR (measured) = 14.4 W/kg

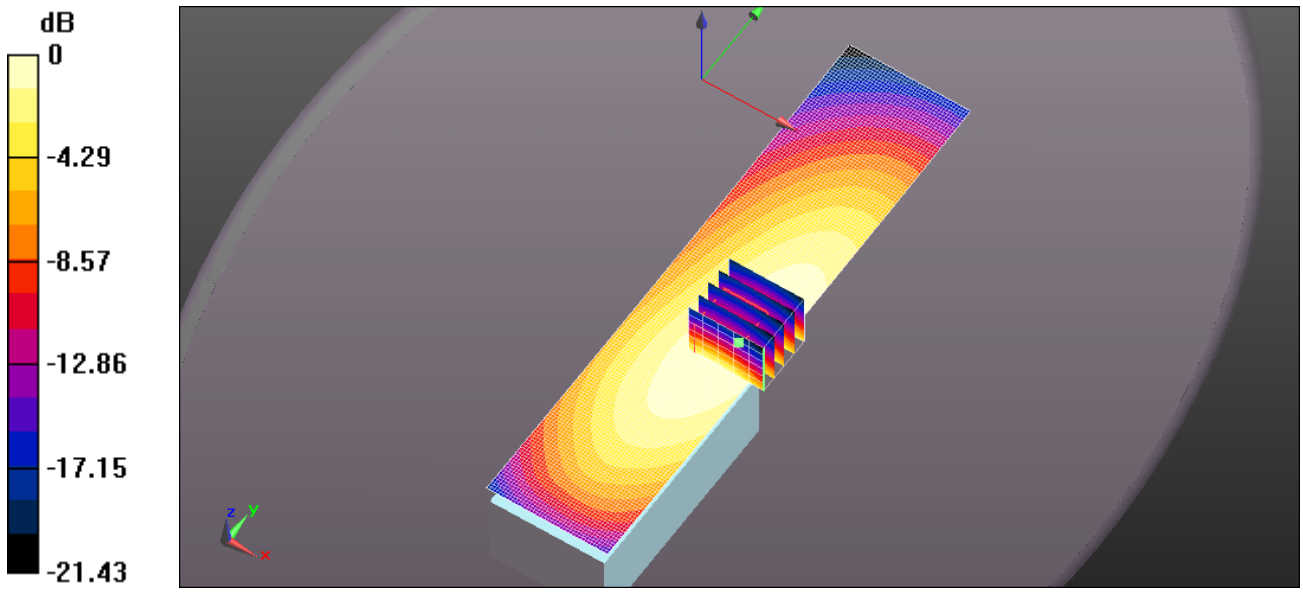

0 dB = 14.6 W/kg = 11.66 dBW/kg

Test Laboratory: Ultratech Group of Labs

FILE NAME: ICOM-409Q BP-279 SC61UC 136MM 496MHZ.DA52:0

DUT: DUT Sample Brick w. Antenna; Type: Sample; Serial: IMEI Number
Program Name: System Performance Check at 450 MHz

Communication System: UID 0, CW (0); Frequency: 496 MHz;Duty Cycle: 1:1
Medium parameters used (interpolated): f = 496 MHz; σ = 0.962 S/m; ε_r = 55.155; ρ = 1000 kg/m^3
Phantom section: Flat Section

DASY4 Configuration:
- Probe: EX3DV4 - SN3673; ConvF(10.29, 10.29, 10.29); Calibrated: 8/24/2015;
- Sensor-Surface: 1.4mm (Mechanical Surface Detection)
- Electronics: DAE4 Sn874; Calibrated: 8/24/2015
- Phantom: ELI 4.0; Type: QD OVA 001 BB; Serial: 1057
- ; SEMCAD X Version 14.6.10 (7331)

ICOM IC-F2000D 450-512 MHz Body/Body - Belt Clip Touching, d=0mm, Pin=4W (ES-Probe)/Area Scan (41x181x1): Interpolated grid: dx=1.500 mm, dy=1.500 mm
Maximum value of SAR (interpolated) = 14.9 W/kg
ICOM IC-F2000D 450-512 MHz Body/Body - Belt Clip Touching, d=0mm, Pin=4W (ES-Probe)/Zoom Scan (5x5x7) (6x5x7)/Cube 0: Measurement grid: dx=7.5mm, dy=7.5mm, dz=5mm
Reference Value = 122.2 V/m; Power Drift = -0.40 dB
Peak SAR (extrapolated) = 16.0 W/kg
SAR(1 g) = 11.1 W/kg; SAR(10 g) = 8.05 W/kg (SAR corrected for target medium)
Maximum value of SAR (measured) = 14.1 W/kg

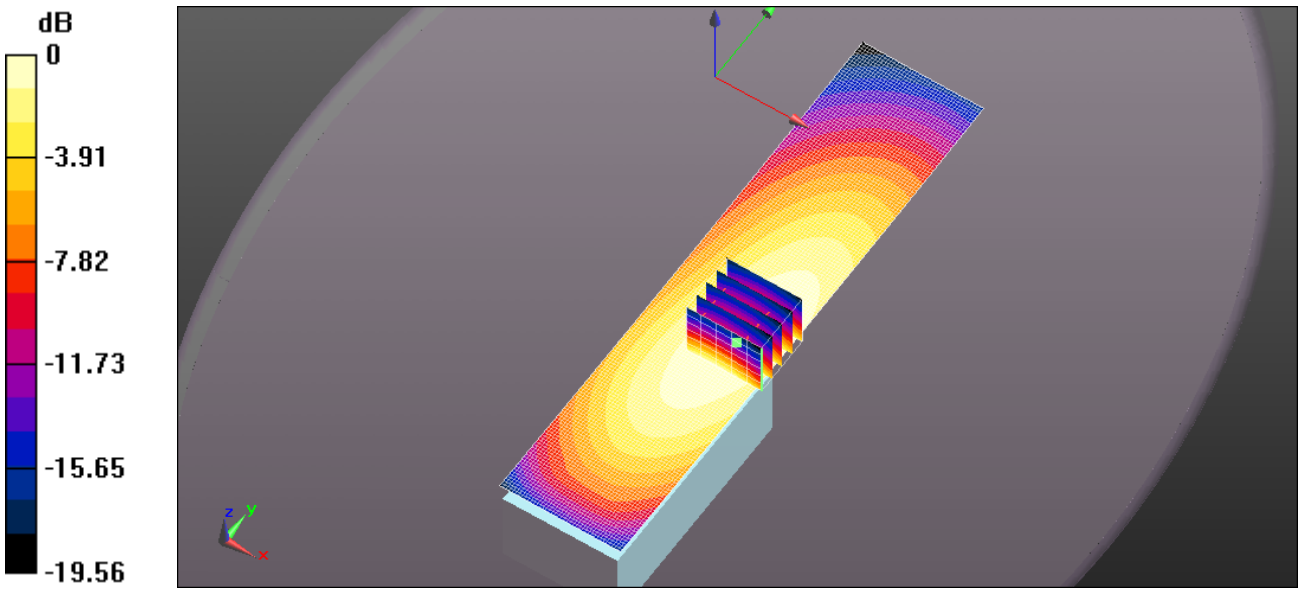

0 dB = 14.9 W/kg = 11.74 dBW/kg

Test Laboratory: Ultratech Group of Labs

FILE NAME: ICOM-409Q BP-278 SC61UC 136MM 496MHZ.DA52:0

DUT: DUT Sample Brick w. Antenna; Type: Sample; Serial: IMEI Number
Program Name: System Performance Check at 450 MHz

Communication System: UID 0, CW (0); Frequency: 496 MHz;Duty Cycle: 1:1
Medium parameters used (interpolated): f = 496 MHz; σ = 0.962 S/m; ε_r = 55.155; ρ = 1000 kg/m^3
Phantom section: Flat Section

DASY4 Configuration:
- Probe: EX3DV4 - SN3673; ConvF(10.29, 10.29, 10.29); Calibrated: 8/24/2015;
- Sensor-Surface: 1.4mm (Mechanical Surface Detection)
- Electronics: DAE4 Sn874; Calibrated: 8/24/2015
- Phantom: ELI 4.0; Type: QD OVA 001 BB; Serial: 1057
- ; SEMCAD X Version 14.6.10 (7331)

ICOM IC-F2000D 450-512 MHz Body/Body - Belt Clip Touching, d=0mm, Pin=4W (ES-Probe)/Area Scan (41x181x1): Interpolated grid: dx=1.500 mm, dy=1.500 mm
Maximum value of SAR (interpolated) = 13.7 W/kg
ICOM IC-F2000D 450-512 MHz Body/Body - Belt Clip Touching, d=0mm, Pin=4W (ES-Probe)/Zoom Scan (5x5x7) (6x5x7)/Cube 0: Measurement grid: dx=7.5mm, dy=7.5mm, dz=5mm
Reference Value = 113.6 V/m; Power Drift = -0.44 dB
Peak SAR (extrapolated) = 13.9 W/kg
SAR(1 g) = 9.51 W/kg; SAR(10 g) = 6.88 W/kg (SAR corrected for target medium)
Maximum value of SAR (measured) = 12.2 W/kg

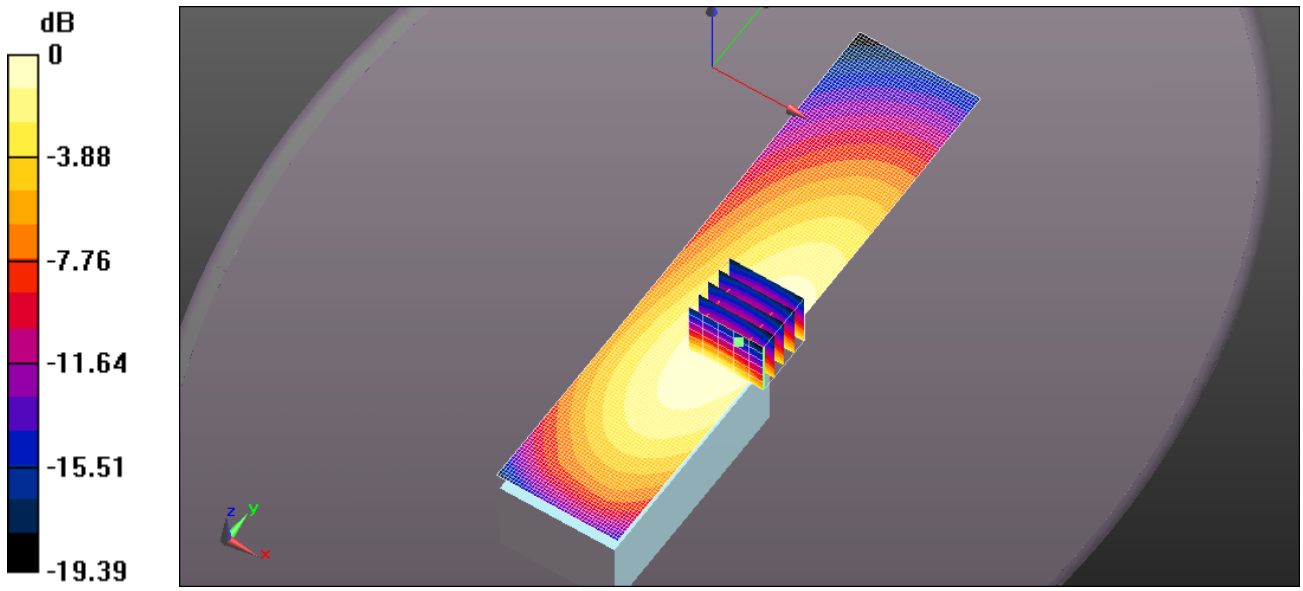

0 dB = 13.7 W/kg = 11.36 dBW/kg

Test Laboratory: Ultratech Group of Labs

FILE NAME: ICOM-409Q BP-280 SC61UC 136MM 512MHZ.DA52:0

DUT: DUT Sample Brick w. Antenna; Type: Sample; Serial: IMEI Number
Program Name: System Performance Check at 450 MHz

Communication System: UID 0, CW (0); Frequency: 512 MHz;Duty Cycle: 1:1
Medium parameters used (interpolated): f = 512 MHz; σ = 0.974 S/m; ε_r = 55.028; ρ = 1000 kg/m^3
Phantom section: Flat Section

DASY4 Configuration:
- Probe: EX3DV4 - SN3673; ConvF(10.29, 10.29, 10.29); Calibrated: 8/24/2015;
- Sensor-Surface: 1.4mm (Mechanical Surface Detection)
- Electronics: DAE4 Sn874; Calibrated: 8/24/2015
- Phantom: ELI 4.0; Type: QD OVA 001 BB; Serial: 1057
- ; SEMCAD X Version 14.6.10 (7331)

ICOM IC-F2000D 450-512 MHz Body/Body - Belt Clip Touching, d=0mm, Pin=4W (ES-Probe)/Area Scan (41x181x1): Interpolated grid: dx=1.500 mm, dy=1.500 mm
Maximum value of SAR (interpolated) = 12.8 W/kg
ICOM IC-F2000D 450-512 MHz Body/Body - Belt Clip Touching, d=0mm, Pin=4W (ES-Probe)/Zoom Scan (5x5x7) (6x5x7)/Cube 0: Measurement grid: dx=7.5mm, dy=7.5mm, dz=5mm
Reference Value = 108.0 V/m; Power Drift = -0.39 dB
Peak SAR (extrapolated) = 13.5 W/kg
SAR(1 g) = 9.2 W/kg; SAR(10 g) = 6.64 W/kg (SAR corrected for target medium)
Maximum value of SAR (measured) = 11.8 W/kg

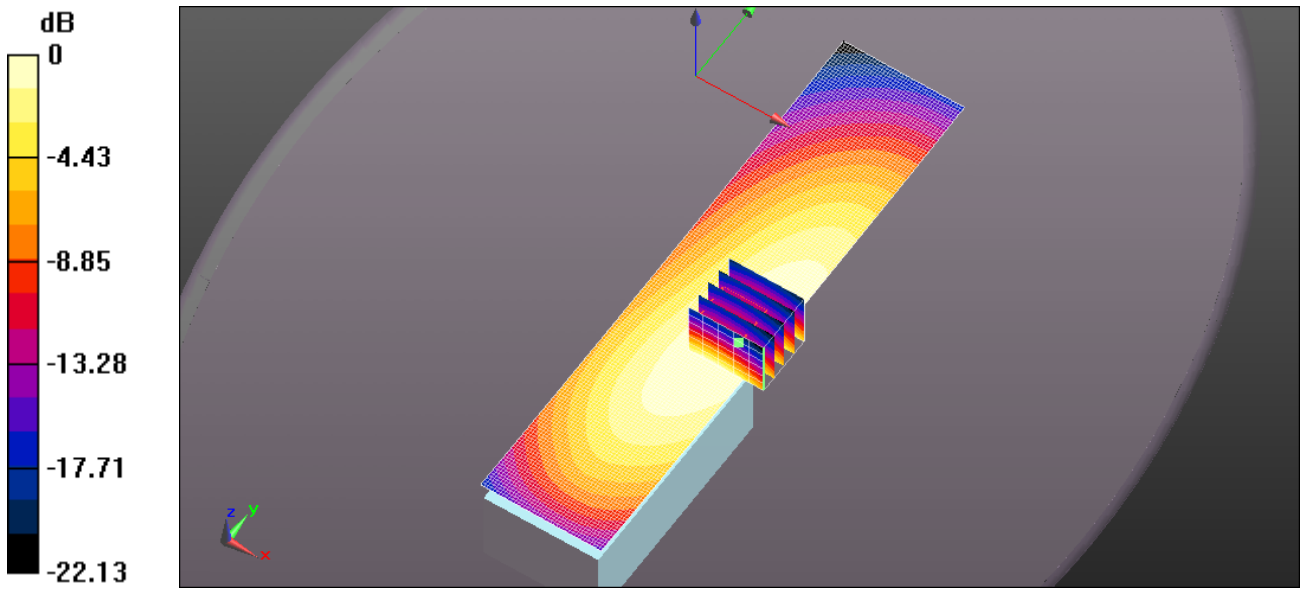

0 dB = 12.8 W/kg = 11.08 dBW/kg

Test Laboratory: Ultratech Group of Labs

FILE NAME: ICOM-409Q BP-280 SC61UC 129MM 475.2MHZ.DA52:0

DUT: DUT Sample Brick w. Antenna; Type: Sample; Serial: IMEI Number
Program Name: System Performance Check at 450 MHz

Communication System: UID 0, CW (0); Frequency: 475.2 MHz; Duty Cycle: 1:1
Medium parameters used (interpolated): f = 475.2 MHz; σ = 0.939 S/m; ε_r = 55.29; ρ = 1000 kg/m^3
Phantom section: Flat Section

DASY4 Configuration:
- Probe: EX3DV4 - SN3673; ConvF(10.29, 10.29, 10.29); Calibrated: 8/24/2015;
- Sensor-Surface: 1.4mm (Mechanical Surface Detection)
- Electronics: DAE4 Sn874; Calibrated: 8/24/2015
- Phantom: ELI 4.0; Type: QD OVA 001 BB; Serial: 1057
- ; SEMCAD X Version 14.6.10 (7331)

ICOM IC-F2000D 450-512 MHz Body/Body - Belt Clip Touching, d=0mm, Pin=4W (ES-Probe)/Area Scan (41x181x1): Interpolated grid: dx=1.500 mm, dy=1.500 mm
Maximum value of SAR (interpolated) = 5.91 W/kg
ICOM IC-F2000D 450-512 MHz Body/Body - Belt Clip Touching, d=0mm, Pin=4W (ES-Probe)/Zoom Scan (5x5x7) (6x5x7)/Cube 0: Measurement grid: dx=7.5mm, dy=7.5mm, dz=5mm
Reference Value = 72.87 V/m; Power Drift = -0.08 dB
Peak SAR (extrapolated) = 6.69 W/kg
SAR(1 g) = 4.6 W/kg; SAR(10 g) = 3.33 W/kg (SAR corrected for target medium)
Maximum value of SAR (measured) = 5.91 W/kg

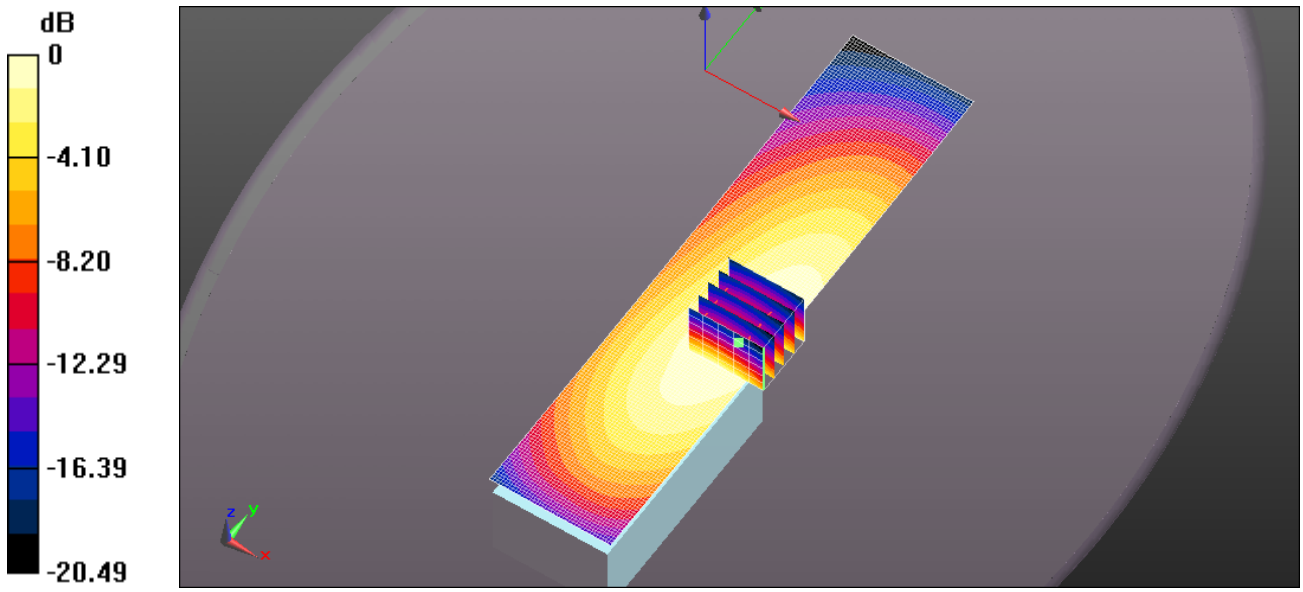

0 dB = 5.91 W/kg = 7.72 dBW/kg

Test Laboratory: Ultratech Group of Labs

FILE NAME: ICOM-409Q BP-280 SC61UC 129MM 496MHZ.DA52:0

DUT: DUT Sample Brick w. Antenna; Type: Sample; Serial: IMEI Number
Program Name: System Performance Check at 450 MHz

Communication System: UID 0, CW (0); Frequency: 496 MHz;Duty Cycle: 1:1
Medium parameters used (interpolated): f = 496 MHz; σ = 0.962 S/m; ε_r = 55.155; ρ = 1000 kg/m^3
Phantom section: Flat Section

DASY4 Configuration:
- Probe: EX3DV4 - SN3673; ConvF(10.29, 10.29, 10.29); Calibrated: 8/24/2015;
- Sensor-Surface: 1.4mm (Mechanical Surface Detection)
- Electronics: DAE4 Sn874; Calibrated: 8/24/2015
- Phantom: ELI 4.0; Type: QD OVA 001 BB; Serial: 1057
- ; SEMCAD X Version 14.6.10 (7331)

ICOM IC-F2000D 450-512 MHz Body/Body - Belt Clip Touching, d=0mm, Pin=4W (ES-Probe)/Area Scan (41x181x1): Interpolated grid: dx=1.500 mm, dy=1.500 mm
Maximum value of SAR (interpolated) = 10.7 W/kg

ICOM IC-F2000D 450-512 MHz Body/Body - Belt Clip Touching, d=0mm, Pin=4W (ES-Probe)/Zoom Scan (5x5x7) (6x5x7)/Cube 0: Measurement grid: dx=7.5mm, dy=7.5mm, dz=5mm
Reference Value = 97.83 V/m; Power Drift = -0.13 dB
Peak SAR (extrapolated) = 12.1 W/kg
SAR(1 g) = 8.28 W/kg; SAR(10 g) = 6 W/kg (SAR corrected for target medium)
Maximum value of SAR (measured) = 10.6 W/kg

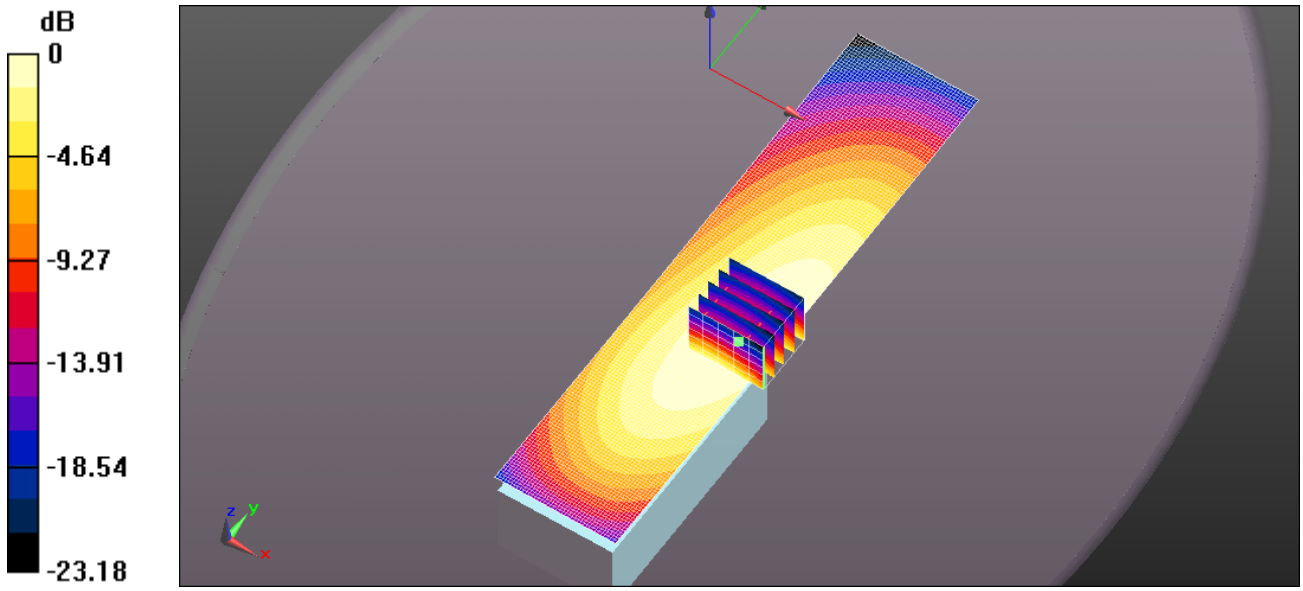

0 dB = 10.7 W/kg = 10.28 dBW/kg

Test Laboratory: Ultratech Group of Labs

FILE NAME: ICOM-409Q BP-280 SC61UC 129MM 512MHZ.DA52:0

DUT: DUT Sample Brick w. Antenna; Type: Sample; Serial: IMEI Number
Program Name: System Performance Check at 450 MHz

Communication System: UID 0, CW (0); Frequency: 512 MHz;Duty Cycle: 1:1
Medium parameters used (interpolated): f = 512 MHz; σ = 0.974 S/m; ε_r = 55.028; ρ = 1000 kg/m^3
Phantom section: Flat Section

DASY4 Configuration:
- Probe: EX3DV4 - SN3673; ConvF(10.29, 10.29, 10.29); Calibrated: 8/24/2015;
- Sensor-Surface: 1.4mm (Mechanical Surface Detection)
- Electronics: DAE4 Sn874; Calibrated: 8/24/2015
- Phantom: ELI 4.0; Type: QD OVA 001 BB; Serial: 1057
- ; SEMCAD X Version 14.6.10 (7331)

ICOM IC-F2000D 450-512 MHz Body/Body - Belt Clip Touching, d=0mm, Pin=4W (ES-Probe)/Area Scan (41x181x1): Interpolated grid: dx=1.500 mm, dy=1.500 mm
Maximum value of SAR (interpolated) = 14.6 W/kg
ICOM IC-F2000D 450-512 MHz Body/Body - Belt Clip Touching, d=0mm, Pin=4W (ES-Probe)/Zoom Scan (5x5x7) (6x5x7)/Cube 0: Measurement grid: dx=7.5mm, dy=7.5mm, dz=5mm
Reference Value = 117.6 V/m; Power Drift = -0.35 dB
Peak SAR (extrapolated) = 15.5 W/kg
SAR(1 g) = 10.6 W/kg; SAR(10 g) = 7.68 W/kg (SAR corrected for target medium)
Maximum value of SAR (measured) = 13.6 W/kg

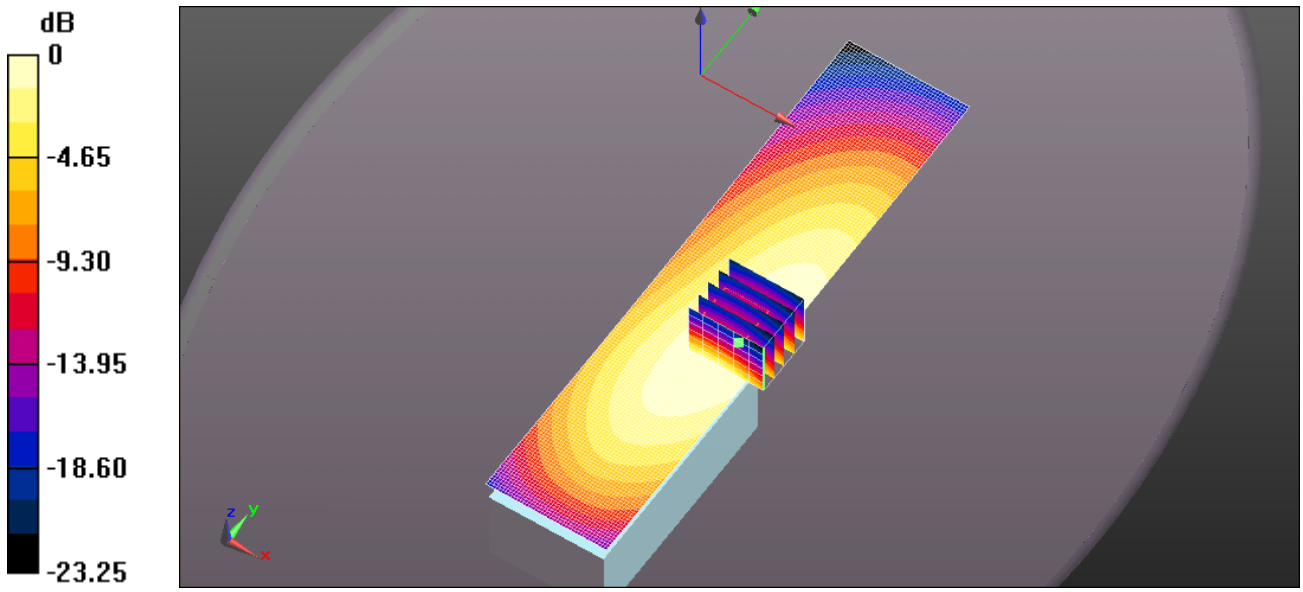

0 dB = 14.6 W/kg = 11.64 dBW/kg

Test Laboratory: Ultratech Group of Labs

FILE NAME: ICOM-409Q BP-279 SC61UC 129MM 512MHZ.DA52:0

DUT: DUT Sample Brick w. Antenna; Type: Sample; Serial: IMEI Number
Program Name: System Performance Check at 450 MHz

Communication System: UID 0, CW (0); Frequency: 512 MHz;Duty Cycle: 1:1
Medium parameters used (interpolated): f = 512 MHz; σ = 0.974 S/m; ε_r = 55.028; ρ = 1000 kg/m^3
Phantom section: Flat Section

DASY4 Configuration:
- Probe: EX3DV4 - SN3673; ConvF(10.29, 10.29, 10.29); Calibrated: 8/24/2015;
- Sensor-Surface: 1.4mm (Mechanical Surface Detection)
- Electronics: DAE4 Sn874; Calibrated: 8/24/2015
- Phantom: ELI 4.0; Type: QD OVA 001 BB; Serial: 1057
- ; SEMCAD X Version 14.6.10 (7331)

ICOM IC-F2000D 450-512 MHz Body/Body - Belt Clip Touching, d=0mm, Pin=4W (ES-Probe)/Area Scan (41x181x1): Interpolated grid: dx=1.500 mm, dy=1.500 mm
Maximum value of SAR (interpolated) = 15.1 W/kg
ICOM IC-F2000D 450-512 MHz Body/Body - Belt Clip Touching, d=0mm, Pin=4W (ES-Probe)/Zoom Scan (5x5x7) (6x5x7)/Cube 0: Measurement grid: dx=7.5mm, dy=7.5mm, dz=5mm
Reference Value = 123.3 V/m; Power Drift = -0.31 dB
Peak SAR (extrapolated) = 14.9 W/kg
SAR(1 g) = 10.3 W/kg; SAR(10 g) = 7.48 W/kg (SAR corrected for target medium)
Maximum value of SAR (measured) = 13.1 W/kg

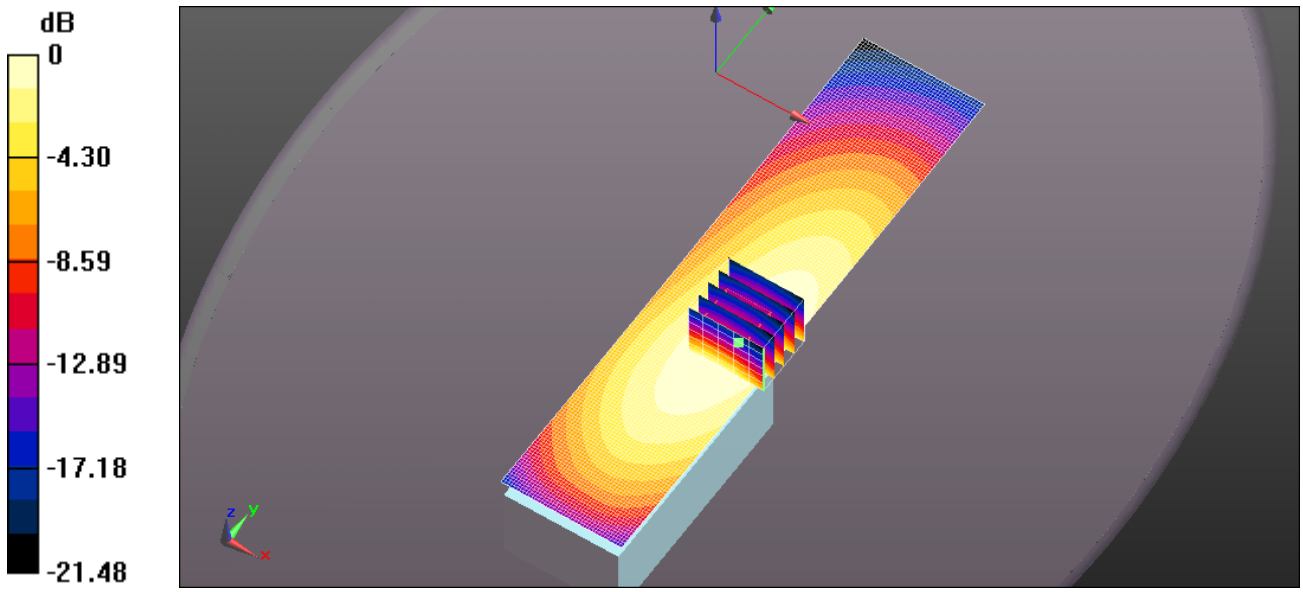

0 dB = 15.1 W/kg = 11.78 dBW/kg

Test Laboratory: Ultratech Group of Labs

FILE NAME: **ICOM-409Q BP-278 SC61UC 129MM 512MHZ.DA52:0**

DUT: DUT Sample Brick w. Antenna; Type: Sample; Serial: IMEI Number
Program Name: System Performance Check at 450 MHz

Communication System: UID 0, CW (0); Frequency: 512 MHz;Duty Cycle: 1:1
Medium parameters used (interpolated): f = 512 MHz; σ = 0.974 S/m; ε_r = 55.028; ρ = 1000 kg/m^3
Phantom section: Flat Section

DASY4 Configuration:
- Probe: EX3DV4 - SN3673; ConvF(10.29, 10.29, 10.29); Calibrated: 8/24/2015;
- Sensor-Surface: 1.4mm (Mechanical Surface Detection)
- Electronics: DAE4 Sn874; Calibrated: 8/24/2015
- Phantom: ELI 4.0; Type: QD OVA 001 BB; Serial: 1057
- ; SEMCAD X Version 14.6.10 (7331)

ICOM IC-F2000D 450-512 MHz Body/Body - Belt Clip Touching, d=0mm, Pin=4W (ES-Probe)/Area Scan (41x181x1): Interpolated grid: dx=1.500 mm, dy=1.500 mm
Maximum value of SAR (interpolated) = 13.6 W/kg
ICOM IC-F2000D 450-512 MHz Body/Body - Belt Clip Touching, d=0mm, Pin=4W (ES-Probe)/Zoom Scan (5x5x7) (6x6x7)/Cube 0: Measurement grid: dx=7.5mm, dy=7.5mm, dz=5mm
Reference Value = 115.9 V/m; Power Drift = -0.37 dB
Peak SAR (extrapolated) = 12.6 W/kg
SAR(1 g) = 8.69 W/kg; SAR(10 g) = 6.29 W/kg (SAR corrected for target medium)
Maximum value of SAR (measured) = 11.1 W/kg

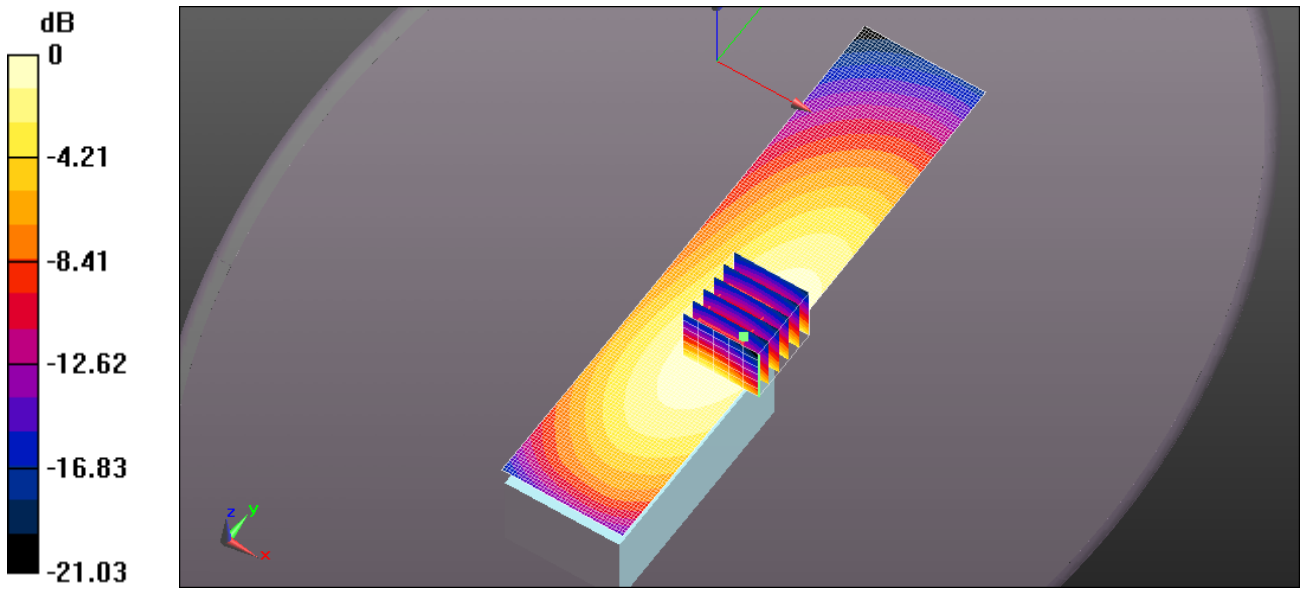

0 dB = 13.6 W/kg = 11.32 dBW/kg

Test Laboratory: Ultratech Group of Labs

FILE NAME: ICOM-409Q BP-280 SC61UC 125MM 478.4MHZ.DA52:0

DUT: DUT Sample Brick w. Antenna; Type: Sample; Serial: IMEI Number
Program Name: System Performance Check at 450 MHz

Communication System: UID 0, CW (0); Frequency: 478.4 MHz;Duty Cycle: 1:1
Medium parameters used (interpolated): f = 478.4 MHz; σ = 0.944 S/m; ε_r = 55.251; ρ = 1000 kg/m^3
Phantom section: Flat Section

DASY4 Configuration:
- Probe: EX3DV4 - SN3673; ConvF(10.29, 10.29, 10.29); Calibrated: 8/24/2015;
- Sensor-Surface: 1.4mm (Mechanical Surface Detection)
- Electronics: DAE4 Sn874; Calibrated: 8/24/2015
- Phantom: ELI 4.0; Type: QD OVA 001 BB; Serial: 1057
- ; SEMCAD X Version 14.6.10 (7331)

ICOM IC-F2000D 450-512 MHz Body/Body - Belt Clip Touching, d=0mm, Pin=4W (ES-Probe)/Area Scan (41x181x1): Interpolated grid: dx=1.500 mm, dy=1.500 mm
Maximum value of SAR (interpolated) = 4.85 W/kg
ICOM IC-F2000D 450-512 MHz Body/Body - Belt Clip Touching, d=0mm, Pin=4W (ES-Probe)/Zoom Scan (5x5x7) (6x5x7)/Cube 0: Measurement grid: dx=7.5mm, dy=7.5mm, dz=5mm
Reference Value = 62.93 V/m; Power Drift = -0.07 dB
Peak SAR (extrapolated) = 5.45 W/kg
SAR(1 g) = 3.77 W/kg; SAR(10 g) = 2.74 W/kg (SAR corrected for target medium)
Maximum value of SAR (measured) = 4.82 W/kg

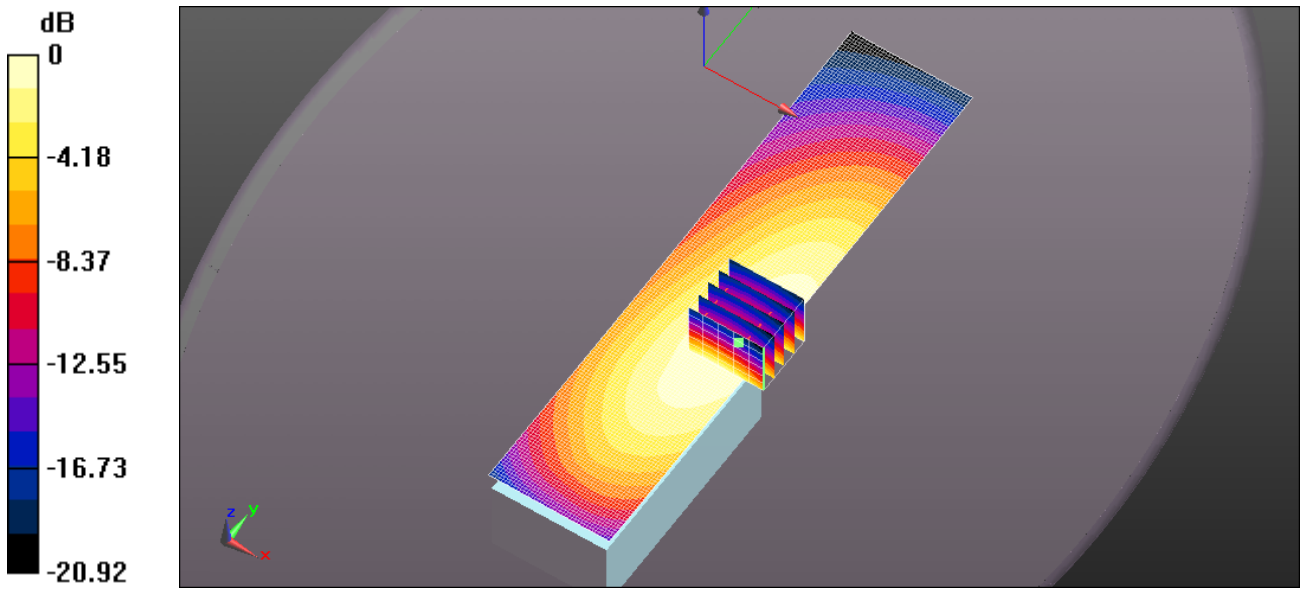

0 dB = 4.85 W/kg = 6.86 dBW/kg

Test Laboratory: Ultratech Group of Labs

FILE NAME: ICOM-409Q BP-280 SC61UC 125MM 500MHZ.DA52:0

DUT: DUT Sample Brick w. Antenna; Type: Sample; Serial: IMEI Number
Program Name: System Performance Check at 450 MHz

Communication System: UID 0, CW (0); Frequency: 500 MHz;Duty Cycle: 1:1
Medium parameters used: f = 500 MHz; σ = 0.965 S/m; ε_r = 55.136; ρ = 1000 kg/m^3
Phantom section: Flat Section

DASY4 Configuration:
- Probe: EX3DV4 - SN3673; ConvF(10.29, 10.29, 10.29); Calibrated: 8/24/2015;
- Sensor-Surface: 1.4mm (Mechanical Surface Detection)
- Electronics: DAE4 Sn874; Calibrated: 8/24/2015
- Phantom: ELI 4.0; Type: QD OVA 001 BB; Serial: 1057
- ; SEMCAD X Version 14.6.10 (7331)

ICOM IC-F2000D 450-512 MHz Body/Body - Belt Clip Touching, d=0mm, Pin=4W (ES-Probe)/Area Scan (41x181x1): Interpolated grid: dx=1.500 mm, dy=1.500 mm
Maximum value of SAR (interpolated) = 8.63 W/kg
ICOM IC-F2000D 450-512 MHz Body/Body - Belt Clip Touching, d=0mm, Pin=4W (ES-Probe)/Zoom Scan (5x5x7) (6x5x7)/Cube 0: Measurement grid: dx=7.5mm, dy=7.5mm, dz=5mm
Reference Value = 88.35 V/m; Power Drift = -0.24 dB
Peak SAR (extrapolated) = 9.67 W/kg
SAR(1 g) = 6.68 W/kg; SAR(10 g) = 4.84 W/kg (SAR corrected for target medium)
Maximum value of SAR (measured) = 8.53 W/kg

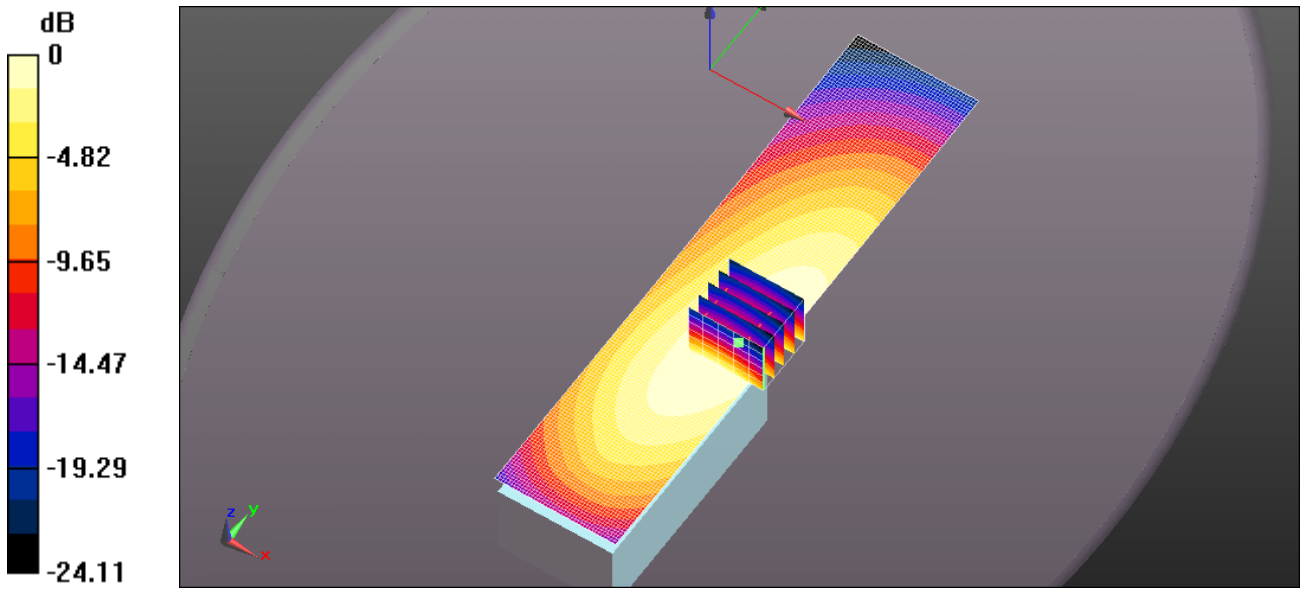

0 dB = 8.63 W/kg = 9.36 dBW/kg