ENGINEERING TEST REPORT

VHF Transceivers
Model No.: IC-F1000D
FCC ID: AFJ369600
IC: 202D-369600

Tested For
ICOM Incorporated
1-1-32, Kamiminami, Hirano-ku
Osaka,
Japan, 547-0003

In accordance with
SAR (Specific Absorption Rate) Requirements using guidelines established in IEEE C95.1-2005, FCC OET Bulletin 65 (Supplement C) and Industry Canada RSS-102 (Issue 4)

UltraTech's File No.: 15ICOM395_SAR_Rev1

This Test report is Issued under the Authority of Tri M. Luu, BASc, Vice President of Engineering UltraTech Group of Labs Date: Feb 26, 2015	
Report Prepared by: Natasha Kee Issued Date: Feb 26, 2015	Tested by: Natasha Kee Test Dates: Jan 1~Jan 7, 2015

The results in this Test Report apply only to the sample(s) tested, which has been randomly selected.

UltraTech Group of Labs

3000 Bristol Circle, Oakville, Ontario, Canada, L6H 6G4
Tel.: (905) 829-1570 Fax.: (905) 829-8050
Website: www.ultratech-labs.com , Email: vic@ultratech-labs.com , Email: tri@ultratech-labs.com

91038	1309	46390-2049	NVLAP LAB CODE 200093-0	SL2-IN-E-1119R	CA2049	TL363_B	TPTDP DA1300

TABLE OF CONTENTS

EXHIBIT 1. INTRODUCTION 1

1.1. SCOPE 1
1.2. REVISION HISTORY 1
1.3. REFERENCES 2

EXHIBIT 2. PERFORMANCE ASSESSMENT 3

2.1. CLIENT AND MANUFACTURER INFORMATION 3
2.2. DEVICE UNDER TEST (D.U.T.) DESCRIPTION 4
2.2.1. PHOTOGRAPH OF D.U.T 5
2.3. LIST OF D.U.T.'S ACCESSORIES: 6
2.3.1. LI-ION CHARGEABLE BATTERY (M/N: BP-278 LI-ION, 7.2V, 1130MAH) 6
2.3.2. LI-ION CHARGEABLE BATTERY (M/N: BP-279 LI-ION, 7.2V, 1485MAH) 7
2.3.3. LI-ION CHARGEABLE BATTERY (M/N: BP-280 LI-ION, 7.2V, 2280MAH) 8
2.3.4. ANTENNA FA-SC25V 163MM 136-150MHZ BLUE TIP 9
2.3.5. ANNTENA FA-SC55V 164MM 150-174MHZ RED TIP 9
2.3.6. ANTENNA FA-SC62V 255MM 150-160MHZ BROWN TIP 10
2.3.7. ANTENNA FA-SC63V 240MM 155-165MHZ BLACK TIP 10
2.3.8. ANTENNA FA-SC26VS 80MM 136-144MHZ BLUE TIP 11
2.3.9. ANTENNA FA-SC27VS 80MM 142-150MHZ PURPLE TIP 11
2.3.10. ANTENNA FA-SC56VS 80MM 150-162MHZ RED TIP 12
2.3.11. ANTENNA FA-SC57VS 80MM 160-174MHZ GREEN TIP 12
2.3.12. CUT ANTENNA FA-SC61VC 150MHZ (156MM), 155MHZ (151MM), 160MHZ (145MM), 170MHZ (136MM) WHITE TIP 13
2.4. SPECIAL CHANGES ON THE D.U.T.'S HARDWARE/SOFTWARE FOR TESTING PURPOSES 14
2.5. ANCILLARY EQUIPMENT 14
2.6. SPECIFIC OPERATING CONDITIONS 15

EXHIBIT 3. SUMMARY OF TEST RESULTS 16

3.1. LOCATION OF TESTS 16
3.2. APPLICABILITY & SUMMARY OF SAR RESULTS 16
3.3. SUMMARY OF MEASUREMENT RESULTS 17
3.3.1. HEAD CONFIGURATION REPORTED SAR RESULTS FOR FIXED ANTENNAS 17
3.3.2. HEAD CONFIGURATION REPORTED SAR RESULTS FOR CUT ANTENNA (FA-SC61VC) 18
3.3.3. BODY CONFIGURATION REPORTED SAR RESULTS FOR FIXED ANTENNAS 19
3.3.4. BODY CONFIGURATION REPORTED SAR RESULTS FOR CUT ANTENNA (FA-SC61VC) 20

EXHIBIT 4. SAR SYSTEM CONFIGURATION 21

4.1. DASY5 SYSTEM OVERVIEW 21
4.1.1. DASY5 SYSTEM SPECIFICATION 21
4.1.2. DASY5 SAR SYSTEM BLOCK DIAGRAM 24
4.2. SAR TEST PHANTOMS 25
4.2.1. SAM TWIN PHANTOM 25
4.2.2. ELI 4.0 PHANTOM 25

EXHIBIT 5. SAR DATA ACQUISITION METHODOLOGY 26

5.1. SAR MEASUREMENT PROCEDURE 26
5.1.1. INTERPOLATION, EXTRAPOLATION AND DETECTION OF MAXIMA 28
5.1.2. AVERAGING AND DETERMINATION OF SPATIAL PEAK SAR 29
5.1.3. EVALUATION ERRORS 29

EXHIBIT 6. MEASUREMENTS, EXAMINATIONS & TEST DATA 31
6.1. TEST CONFIGURATIONS 31
6.2. GENERAL TEST SETUP 32
6.2.1. EQUIPMENT CONFIGURATION 32
6.2.2. EXERCISING EQUIPMENT 32
6.3. PHOTOGRAPHS OF TISSUE DEPTH 33
6.4. PHOTOGRAPHS OF D.U.T. POSITION 34
6.4.1. HEAD CONFIGURATION 34
6.4.2. BODY CONFIGURATION 36
EXHIBIT 7. SAR MEASUREMENT SYSTEM VERIFICATION 38
7.1. STANDARD SOURCE 38
7.2. STANDARD SOURCE INPUT POWER MEASUREMENT 39
7.3. SYSTEM VALIDATION PROCEDURE 39
7.4. VERIFICATION RESULTS 40
7.4.1. REFERENCE SAR VALUES AT 150 MHZ 40*
7.4.2. D.U.T. POWER MEASUREMENT 45
7.5. RF CONDUCTED OUTPUT POWER MEASUREMENT 46
7.6. SIMULATED TISSUE 47
7.7. MEASUREMENT OF ELECTRICAL CHARACTERISTICS OF SIMULATED TISSUE 48
7.7.1. EQUIPMENT SET-UP 48
7.7.2. MEASUREMENT PROCEDURE 49
7.8. SIMULATED TISSUE MEASUREMENT RESULTS 50
7.8.1. 150 MHZ TISSUE 50
EXHIBIT 8. SAR MEASUREMENT UNCERTAINTY 51
8.1. MEASUREMENT UNCERTAINTY EVALUATION FOR SAR TEST 51
EXHIBIT 9. ADDITIONAL TEST INSTRUMENTS LIST 52
EXHIBIT 10. SAR MEASUREMENT DATA 52
EXHIBIT 11. SPEAG DASY 5.2 CALIBRATION CERTIFICATES 52
EXHIBIT 12. BODY WORN ACCESSORIES 52

EXHIBIT 1. INTRODUCTION

1.1. SCOPE

Reference:	SAR (Specific Absorption Rate) Requirements IEEE C95.1-2005, FCC OET Bulletin 65 (Supplement C Edition 01-01), FCC 47CFR Part 2.1093 Industry Canada RSS-102 (Issue 4).
Title	Safety Levels with respect to human exposure to Radio Frequency Electromagnetic Fields Guideline for Evaluating the Environmental Effects of Radio Frequency Radiation
Purpose of Test:	To verify compliance with Federal regulated SAR requirements in Canada and the US.
Method of Measurements:	IEEE C95.1-2005, FCC OET Bulletin 65 (Supplement C Edition 01-01) and Industry Canada RSS-102 (Issue 4), KDB 643646
Device Category	Portable
Exposure Category	Occupational/Controlled

1.2. REVISION HISTORY

Document	Issue Date	Description
15ICOM395_SAR	Jan 7, 2015	Original
15ICOM395_SAR_Rev1	Feb 26, 2015	Updated with HM-171GPW handset

1.3. REFERENCES

The methods and procedures used for the measurements contained in this report are details in the following reference standards:

Publications	Year	Title
IEEE Std. 1528	2013	Draft Recommended practice for determining the Peak Spatial-Average Specific Absorption rate (SAR) in the Human Body Due to Wireless Communications Devices: Experimental Techniques.
Industry Canada RSS-102	2010	"Evaluation Procedure for Mobile and Portable Radio Transmitters with respect to Health Canada's Safety Code 6 for Exposure of Humans to Radio Frequency Fields"
NCRP Report No.86	1986	"Biological Effects and Exposure Criteria for radio Frequency Electromagnetic Fields"
FCC OET Bulletin 65	2001	"Evaluating Compliance with FCC Guidelines for Human Exposure to radio Frequency Fields"
ANSI/IEEE C95.3	2002	"Recommended Practice for the Measurement of Potentially Hazardous Electromagnetic Fields - RF and Microwave"
ANSI/IEEE C95.1	2005	"Safety Levels with Respect to Human Exposure to Radio Frequency Electromagnetic Fields, 3kHz to 300GHz"
ARPANSA	2002	RADIATION PROTECTION STANDARD Maximum Exposure Levels to Radiofrequency Fields — 3 kHz to 300 GHz Radiation Protection Series Publication No. 3
EN 50566	2013	Product standard to demonstrate compliance of radio frequency fields from handheld and body-mounted wireless communication devices used by the general public (30 MHz - 6 GHz)
EN 62479	2010	Assessment of the compliance of low power electronic and electrical equipment with the basic restrictions related to human exposure to electromagnetic fields (10 MHz to 300 GHz)
IEC 62209-2	2010	Human exposure to radio frequency fields from hand-held and body-mounted wireless communication devices – Human models, instrumentation, and procedures – Part 2: Procedure to determine the specific absorption rate (SAR) for wireless communication devices used in close proximity to the human body (frequency range of 30 MHz to 6 GHz)
FCC KDB	2014	865664 D01 SAR Measurement 100 MHz to 6 GHz v01r03 643646 D01 SAR Test for PTT Radios v01r01 648474 D04 Handset SAR v01r02 447498 D01 General RF Exposure Guidance v05r02 388624 D01 Permit But Ask Procedure v10 388624 D02 Permit But Ask List v15r02 865664 D02 RF Exposure Reporting v01r01 690783 D01 SAR Listings on Grants v01r0
Health Canada's Safety Code 6	2009	Limits of Human Exposure to Radiofrequency Electromagnetic Energy in the Frequency Range from 3 kHz to 300 GHz

EXHIBIT 2. PERFORMANCE ASSESSMENT

2.1. CLIENT AND MANUFACTURER INFORMATION

APPLICANT:	
Name:	ICOM Incorporated
Address:	1-1-32, Kamiminami Hirano-ku, Osaka Japan, 547-0003
Contact Person:	Mr. Hideji Fujishima Phone #: +81 6 6793 5302 Fax #: +81 6 6793 0013 Email Address: world_support@icom.co.jp

MANUFACTURER:	
Name:	ICOM Incorporated
Address:	1-1-32, Kamiminami Hirano-ku, Osaka Japan, 547-0003
Contact Person:	Mr. Hideji Fujishima Phone #: +81 6 6793 5302 Fax #: +81 6 6793 0013 Email Address: world_support@icom.co.jp

2.2. DEVICE UNDER TEST (D.U.T.) DESCRIPTION

The following is the information provided by the applicant.

Trade Name	ICOM Inc.
Type/Model Number	IC-F1000D
Type of Equipment	Licensed Non-Broadcast Transceiver
Serial Number	00000214-0
Transmitter Frequency Band	136 ~ 174 MHz
Rated RF Power	5 Watts conducted (High)
Modulation Employed	FM
Antenna	Helical whip stubby antenna(M/N:FA-SC26VS, 136-144 MHz, -2.4dBi, blue ring) Helical whip stubby antenna(M/N:FA-SC27VS, 142-150MHz,-2.4dBi, purple ring) Helical whip antenna (M/N: FA-SC25V, 136-150 MHz, -2.4 dBi, blue ring) Helical whip antenna (M/N: FA-SC55V, 150-174 MHz, -4.5dBi, red ring) High gain antenna (M/N: FA-SC62V, 150-160MHz, 0 dBi, brown ring) High gain antenna (M/N: FA-SC63V, 155-165MHz, 0 dBi, black ring) Helical whip stubby antenna (M/N: FA-SC56VS, 150-162 MHz, -17.1dBi, red ring) Helical whip stubby antenna (M/N: FA-SC57VS, 160-174 MHz, -17.3 dBi, green ring) Helical whip cut antenna (M/N: FA-SC61VC, 136-174 MHz, -7.4dBi, white ring)
Power Supply/Battery Packs	Rechargeable Li-Ion battery (M/N:BP-278 1130mAh) Rechargeable Li-Ion battery (M/N:BP-279 1485mAh) Rechargeable Li-Ion battery (M/N:BP-280 2280mAh)
Belt Clip	MB-133
DC Cables	CP-23L Cigarette lighter cable OPC-656 DC Power cable
Battery Charger	BC-213 Charge Cradle BC-123SA Charge Cradle adapter BC-214 Multi-Charge Cradle BC-157S Multi-Charge Cradle adapter
Speaker/Microphone	HM-168LWP HM-158LA HM-159LA HM-153LA HM-166LA HM-171GPW
Headsets	HS-94 Ear-hook type HS-94LWP Behind head type HS-95 Behind ear type HS-95LWP Behind head type HS-97 Throat Type VS-4LA PTT Switch Cable OPC-2004LA VOX adapter
Primary User Functions of D.U.T.	Transmit and receive data

2.2.1. Photograph of D.U.T

< D.U.T.'s front and rear view without battery and antenna >

2.3. LIST OF D.U.T.'S ACCESSORIES:

2.3.1. Li-ion Chargeable Battery (M/N: BP-278 Li-ion, 7.2V, 1130mAh)

2.3.2. Li-ion Chargeable Battery (M/N: BP-279 Li-ion, 7.2V, 1485mAh)

2.3.3. Li-ion Chargeable Battery (M/N: BP-280 Li-ion, 7.2V, 2280mAh)

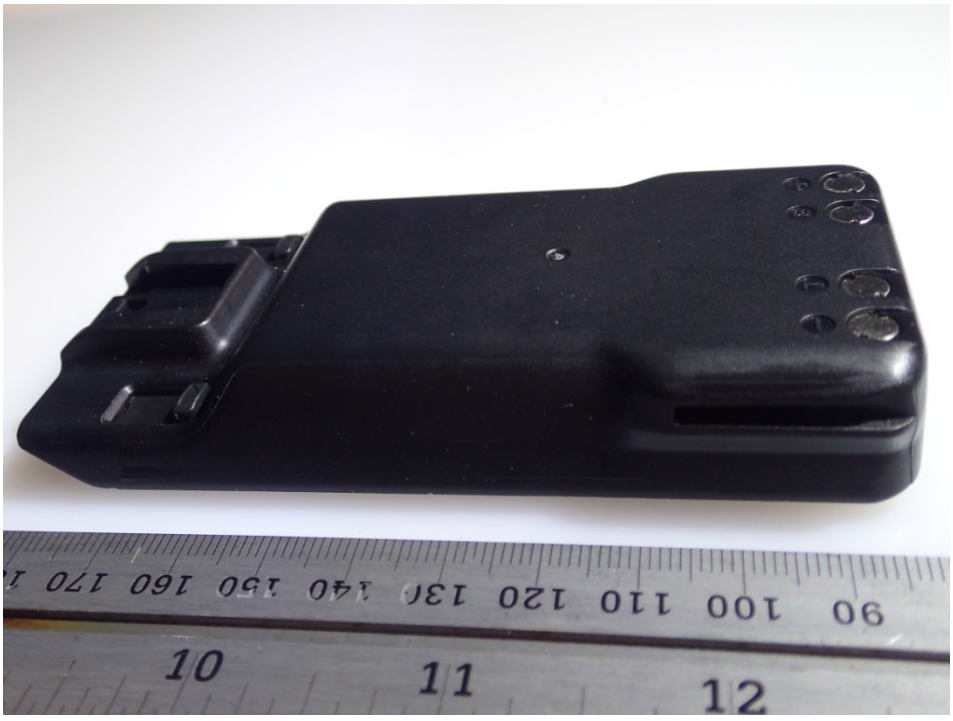

2.3.4. Antenna FA-SC25V 163mm 136-150MHz Blue Tip

2.3.5. Anntena FA-SC55V 164mm 150-174MHz Red Tip

2.3.6. Antenna FA-SC62V 255mm 150-160MHz Brown Tip

2.3.7. Antenna FA-SC63V 240mm 155-165MHz Black Tip

2.3.8. Antenna FA-SC26VS 80mm 136-144MHz Blue Tip

2.3.9. Antenna FA-SC27VS 80mm 142-150MHz Purple Tip

2.3.10. Antenna FA-SC56VS 80mm 150-162MHz Red Tip

2.3.11. Antenna FA-SC57VS 80mm 160-174MHz Green Tip

2.3.12. Cut Antenna FA-SC61VC 150MHz (156mm), 155MHz (151mm), 160MHz (145mm), 170MHz (136mm) White Tip

2.4. SPECIAL CHANGES ON THE D.U.T.'S HARDWARE/SOFTWARE FOR TESTING PURPOSES

N/A

2.5. ANCILLARY EQUIPMENT

N/A

2.6. SPECIFIC OPERATING CONDITIONS

Antenna	136-174 MHz	Frequency			# Test	Test Frequencies (MHz)				
		Low	High	Centre	Freq	F1	F2	F3	F4	F5
FA-SC25V	136-150 MHz	136	150	143	3	136	143	150		
FA-SC55V	150-174 MHz	150	174	162	5	150	156	162	166	170
FA-SC62V	150-160 MHz	150	160	155	3	150	155	160		
FA-SC63V	155-165 MHz	155	165	160	3	155	160	165		
FA-SC26VS	136-144 MHz	136	144	140	3	136	140	144		
FA-SC27VS	142-150 MHz	142	150	146	3	142	146	150		
FA-SC56VS	150-162 MHz	150	162	156	3	150	156	162		
FA-SC57VS	160-174 MHz	160	174	167	3	160	166	170		
Cut Antenna 136-175MHz										
FA-SC61VC	150MHz	150	174	162	5	150	155	160	165	170
FA-SC61VC	155MHz	150	174	162	5	150	155	160	165	170
FA-SC61VC	160MHz	150	174	162	5	150	155	160	165	170
FA-SC61VC	170MHz	150	174	162	5	150	155	160	165	170

1. Test Channel Reduction may be applied if SAR < 50% SAR limit for Cut Antenna per FCC KDB 133795.

2. Test Reduction may be applied per FCC KDB 643646 D01 SAR Test for PTT Radios v01r01.

3. Head SAR measured with a 25mm separation distance.

4. When multiple standard batteries are supplied with a radio, the battery with the highest capacity is considered the default battery for making Head SAR measurements.

5. For Body worn configurations, the thinnest battery usually provides the least separation distance to the phantom and is considered to provide the highest SAR. Other battery holders may be considered depending on the hot spot location and angling of the antenna feed point.

6. If SAR > 50% SAR limit, then additional batteries may have to be evaluated.

7. SAR scaling to duty factor (50%) and max power of tune-up procedure is required.

8. The IC-F1000D radio device has SWR monitor which shuts off the transmitter when high SWR is detected. This feature cannot be defeated and is part of the radio devices safety feature.

EXHIBIT 3. SUMMARY OF TEST RESULTS

3.1. LOCATION OF TESTS

All of the measurements described in this report were performed at UltraTech Group of Labs located at:

3000 Bristol Circle, in the city of Oakville, Province of Ontario, Canada.

All measurements were performed in UltraTech's shielded chamber, 16' x 13' x 8'.

3.2. APPLICABILITY & SUMMARY OF SAR RESULTS

The maximum peak spatial – 1g average Reported SAR [1]measured was found to be **0.29** W/Kg for head configuration and **0.70** W/Kg for body configuration with 50% usage-based time-averaging applied for PTT device.

This is in compliance to the 1g average SAR limit of 8 W/Kg for occupational/controlled exposure.

For body configuration tests, all the supplied body-worn accessories were checked through pre-scans and confirmed those options that were not affecting SAR compliance. Therefore, the final evaluation for body configuration was performed only with M/N: MB-133 Belt Clip, M/N: HM-168LWP Speaker Microphone , M/N: BP-278, M/N: BP-279, and M/N: BP-280 Li-ion rechargeable battery packs.

[1] Reported SAR is Measured SAR with 50% PTT duty cycle applied and scaled up to 5W tune up power

3.3. SUMMARY OF MEASUREMENT RESULTS

3.3.1. Head Configuration Reported SAR [2] Results for Fixed Antennas

Antenna	Power (W)	CH	CH. Freq (MHz)	BP-278 1190mAh	HEAD SAR (W/Kg) BP-279 1485mAh	BP-280 2280mAh
FA-SC25V 163mm 136-150 MHz Blue	5.13	1	136	-	-	-
	5.51	4	143	-	-	-
	5.38	7	150	0.24	0.23	0.29
FA-SC55V 164mm 150-174 MHz Red	5.38	7	150	-	0.12	0.00
	5.17	9	156	-	-	-
	5.08	11	162	-	-	-
	5.07	13	166	-	-	-
	5.06	15	170	-	-	-
FA-SC62V 255mm 150-160 MHz Brown	5.38	7	150	-	0.12	-
	5.17	8	155	-	-	-
	5.13	10	160	-	-	-
FA-SC63V 240mm 155-165 MHz Black	5.17	8	155	-	0.11	-
	5.13	10	160	-	-	-
	5.08	12	165	-	-	-
FA-SC26VS 80mm 136-144 MHz Blue	5.13	1	136	-	-	-
	5.36	2	140	-	-	-
	5.51	5	144	-	0.13	-
FA-SC27VS 80mm 142-150 MHz Purple	5.48	3	142	-	-	-
	5.50	6	146	-	0.14	-
	5.38	7	150	-	-	-
FA-SC56VS 80mm 150-162 MHz Red	5.38	7	150	-	0.13	-
	5.17	9	156	-	-	-
	5.08	11	162	-	-	-
FA-SC57VS 80mm 160-174 MHz Green	5.13	10	160	0.15	0.16	0.19
	5.07	13	166	-	-	-
	5.06	15	170	-	-	-

[2] Reported SAR is Measured SAR with 50% PTT duty cycle applied and scaled up to 5W tune up power

3.3.2. Head Configuration Reported SAR [3]Results for Cut Antenna (FA-SC61VC)

Antenna	Power (W)	CH	CH. Freq (MHz)	HEAD SAR (W/Kg) BP-278 1190mAh	BP-279 1485mAh	BP-280 2280mAh
FA-SC61VC 156mm 150MHz White	5.38	7	150	-	0.07	-
	5.17	8	155	-	-	-
	5.13	10	160	-	-	-
	5.08	12	165	-	-	-
	5.06	15	170	-	-	-
FA-SC61VC 151mm 155MHz White	5.38	7	150	-	0.06	-
	5.17	8	155	-	-	-
	5.13	10	160	-	-	-
	5.08	12	165	-	-	-
	5.06	15	170	-	-	-
FA-SC61VC 145mm 160MHz White	5.38	7	150	-	0.06	-
	5.17	8	155	-	-	-
	5.13	10	160	-	-	-
	5.08	12	165	-	-	-
	5.06	15	170	-	-	-
FA-SC61VC 136mm 170MHz White	5.38	7	150	-	0.03	-
	5.17	8	155	-	-	-
	5.13	10	160	-	-	-
	5.08	12	165	-	-	-
	5.06	15	170	-	-	-

[3] Reported SAR is Measured SAR with 50% PTT duty cycle applied and scaled up to 5W tune up power

3.3.3. Body Configuration Reported SAR [4]Results for Fixed Antennas

Antenna	Power (W)	CH	CH. Freq (MHz)	BP-278 1190mAh	BODY SAR (W/Kg) BP-279 1485mAh	BP-280 2280mAh
FA-SC25V 163mm 136-150 MHz Blue	5.13	1	136	-	-	0.24
	5.51	4	143	-	-	0.12
	5.38	7	150	-	-	-
FA-SC55V 164mm 150-174 MHz Red	5.38	7	150	-	0.70	0.42
	5.17	9	156	-	-	-
	5.08	11	162	-	-	-
	5.07	13	166	-	-	-
	5.06	15	170	-	-	-
FA-SC62V 255mm 150-160 MHz Brown	5.38	7	150	0.45	0.66	0.49
	5.17	8	155	-	-	-
	5.13	10	160	-	-	-
FA-SC63V 240mm 155-165 MHz Black	5.17	8	155	-	0.41	0.39
	5.13	10	160	-	-	-
	5.08	12	165	-	-	-
FA-SC26VS 80mm 136-144 MHz Blue	5.13	1	136	-	-	-
	5.36	2	140	-	-	-
	5.51	5	144	-	-	0.05
FA-SC27VS 80mm 142-150 MHz Purple	5.48	3	142	-	-	-
	5.50	6	146	-	-	0.13
	5.38	7	150	-	-	-
FA-SC56VS 80mm 150-162 MHz Red	5.38	7	150	-	-	0.24
	5.17	9	156	-	-	-
	5.08	11	162	-	-	-
FA-SC57VS 80mm 160-174 MHz Green	5.13	10	160	0.00	0.44	0.45
	5.07	13	166	-	-	-
	5.06	15	170	-	-	-

[4] Reported SAR is Measured SAR with 50% PTT duty cycle applied and scaled up to 5W tune up power

3.3.4. Body Configuration Reported SAR [5]Results for Cut Antenna (FA-SC61VC)

Antenna	Power (W)	CH	CH. Freq (MHz)	BP-278 1190mAh	BODY SAR (W/Kg) BP-279 1485mAh	BP-280 2280mAh
FA-SC61VC 156mm 150MHz White	5.38	7	150	-	0.36	0.37
	5.17	8	155	-	-	-
	5.13	10	160	-	-	-
	5.08	12	165	-	-	-
	5.06	15	170	-	-	-
FA-SC61VC 151mm 155MHz White	5.38	7	150	-	-	0.30
	5.17	8	155	-	-	-
	5.13	10	160	-	-	-
	5.08	12	165	-	-	-
	5.06	15	170	-	-	-
FA-SC61VC 145mm 160MHz White	5.38	7	150	-	-	0.20
	5.17	8	155	-	-	-
	5.13	10	160	-	-	-
	5.08	12	165	-	-	-
	5.06	15	170	-	-	-
FA-SC61VC 136mm 170MHz White	5.38	7	150	-	-	0.22
	5.17	8	155	-	-	-
	5.13	10	160	-	-	-
	5.08	12	165	-	-	-
	5.06	15	170	-	-	-

[5] Reported SAR is Measured SAR with 50% PTT duty cycle applied and scaled up to 5W tune up power.

EXHIBIT 4. SAR SYSTEM CONFIGURATION

4.1. DASY5 SYSTEM OVERVIEW

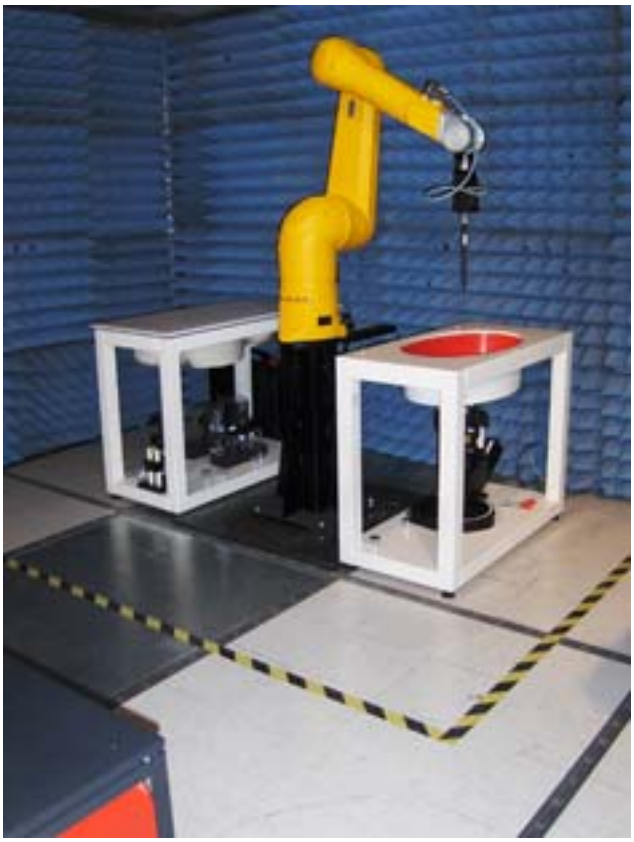

4.1.1. DASY5 System Specification

Positioning Equipment	Computer
DASAY5 Measurement Server	Type: HP Compaq dc7800p Convertible
Data Acquisition Electronics (DAE)	CPU : Intel® Core™ 2 Duo E8500
Light Beam Unit	Memory : 2GB RAM
Device Holder	Operating System : Windows XP Professional
Robot (STAUBLI TX90)	Monitor : HP L1950g LCD

4.1.1.1. *DASY5 Measurement Server*

The DASY5 measurement server is based on a PC/104 CPU board with a 400MHz Intel ULV Celeron, 128MB chipdisk and 128MB RAM. The necessary circuits for communication with the DAE4 (or DAE3) electronics box, as well as the 16 bit AD converter system for optical detection and digital I/O interface are contained on the DASY5 I/O board, which is directly connected to the PC/104 bus of the CPU board.

The measurement server performs all real-time data evaluation of field measurements and surface detection, controls robot movements and handles safety operation. The PC operating system cannot interfere with these time critical processes. All connections are supervised by a watchdog, and disconnection of any of the cables to the measurement server will automatically disarm the robot and disable all program-controlled robot movements. Furthermore, the measurement server is equipped with an expansion port which is reserved for future applications. Please note that this expansion port does not have a standardized pinout, and therefore only devices provided by SPEAG can be connected. Devices from any other supplier could seriously damage the measurement server.

4.1.1.2. *Data Acquisition Electronics*

The data acquisition electronics (DAE4 or DAE3) consist of a highly sensitive electrometer-grade preamplifier with auto-zeroing, a channel and gain-switching multiplexer, a fast 16 bit AD-converter and a command decoder with a control logic unit. Transmission to the measurement server is accomplished through an optical downlink for data and status information, as well as an optical uplink for commands and the clock.

The mechanical probe mounting device includes two different sensor systems for frontal and sideways probe contacts. They are used for mechanical surface detection and probe collision detection.

The input impedance of both the DAE4 as well as of the DAE3 box is 200MOhm; the inputs are symmetrical and floating. Common mode rejection is above 80 dB.

4.1.1.3. *Dosimetric Probes*

These probes are specially designed and calibrated for use in liquids with high permittivity. They should not be used in air, since the spherical isotropy in air is poor (-2 dB). The dosimetric probes have special calibrations in various liquids at different frequencies.

4.1.1.3.1. ES3DV3 Isotropic E-Filed Probe

Construction	Symmetrical design with triangular core Interleaved sensors Built-in shielding against static charges PEEK enclosure material (resistant to organic solvents, e.g., DGBE)
Calibration	Basic Broad Band Calibration in air Conversion Factors (CF) for HSL 900 and HSL 1750 Additional CF for other liquids and frequencies
Frequency	10 MHz to 4 GHz Linearity ± 0.2 dB (30 MHz to 4 GHz)
Directivity	± 0.2 dB in HSL (rotation around probe axis) ± 0.3 dB in tissue material (rotation normal to probe axis)
Dynamic Range	5 µW/g to > 100 mW/g Linearity: ± 0.2 dB
Dimensions	Overall length: 330 mm (Tip: 20 mm) Tip diameter: 3.9 mm (Body: 12 mm) Distance from probe tip to dipole centers: 2.0 mm

4.1.1.3.2. EX3DV4 Isotropic E-Filed Probe

Construction	Symmetrical design with triangular core Built-in shielding against static charges PEEK enclosure material (resistant to organic solvents, e.g., DGBE)
Calibration	Basic Broad Band Calibration in air Conversion Factors (CF) for HSL 900 and HSL 1750 Additional CF for other liquids and frequencies
Frequency	10 MHz to > 6 GHz Linearity: ± 0.2 dB (30 MHz to 6 GHz)
Directivity	± 0.3 dB in HSL (rotation around probe axis) ± 0.5 dB in tissue material (rotation normal to probe axis)
Dynamic Range	10 µW/g to > 100 mW/g Linearity: ± 0.2 dB (noise: typically < 1 µW/g)
Dimensions	Overall length: 330 mm (Tip: 20 mm) Tip diameter: 2.5 mm (Body: 12 mm) Typical distance from probe tip to dipole centers: 1 mm

4.1.2. DASY5 SAR SYSTEM block diagram

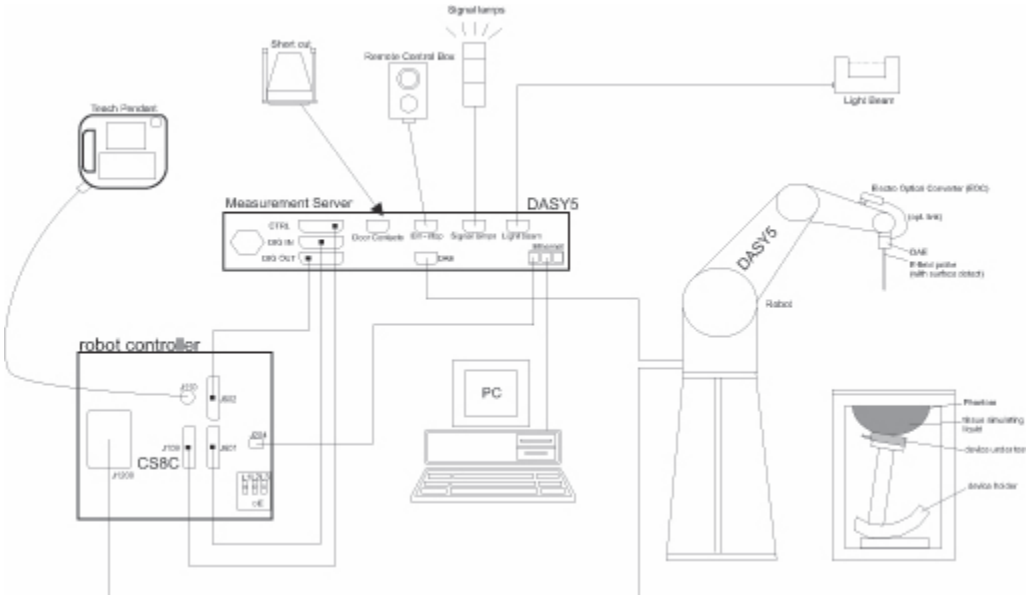

4.2. SAR TEST PHANTOMS

4.2.1. SAM Twin Phantom

For Head mounted devices placed next to the ear, the phantom used in the evaluation of the RF exposure of the user of the wireless device is an IEEE P1528 compliant SAM Twin phantom, shaped like a human head and filled with a mixture simulating the dielectric characteristics of the brain. A left sided head and a right sided head are evaluated to determine the worst case orientation for SAR.

4.2.2. ELI 4.0 Phantom

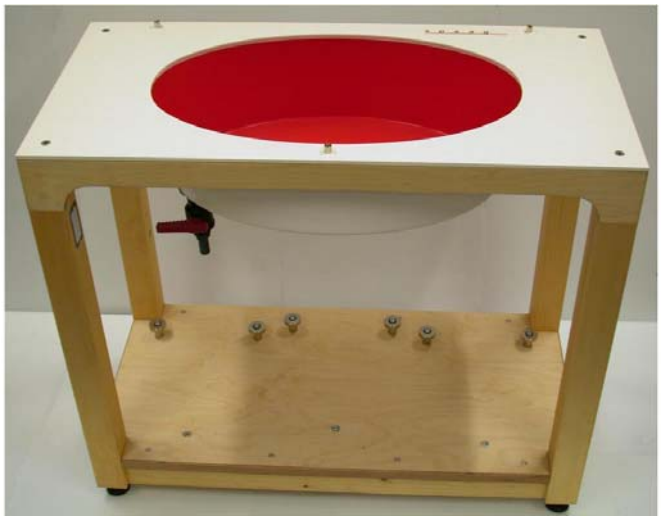

For body mounted and frontal held push-to-talk devices, an IEC 62209-2 compliant Oval Flat Phantom (ELI 4.0) with a base plate thickness of 2mm is used.

EXHIBIT 5. SAR DATA ACQUISITION METHODOLOGY

5.1. SAR MEASUREMENT PROCEDURE

The goal of the measurement process is to scan the phantom over a selected area in order to find the region of highest levels of RF energy and then to obtain a single value for the peak spatial-average of SAR over a volume that would contain one gram (in the shape of a cube) of biological tissue. The test procedure, of course, measures SAR in the simulated tissue.

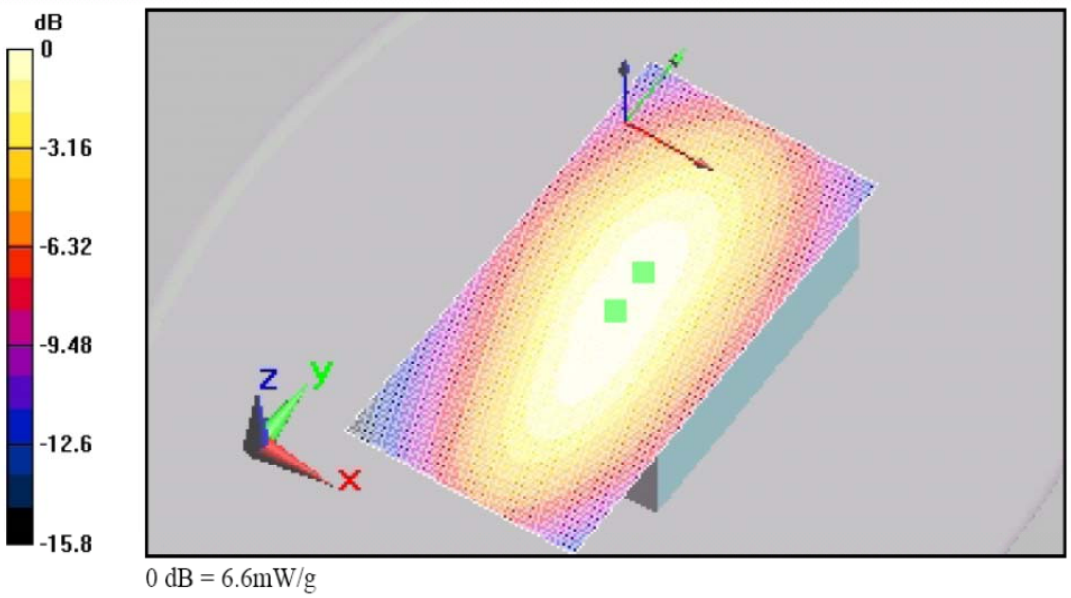

< Area scan >

The software requests the user to move the probe to locations at two extreme corners of a rectangle that encloses the area to be scanned. An arbitrary origin and the spatial resolution for the scan are also specified. Under program control, the scan is performed automatically by the robot-guided probe.

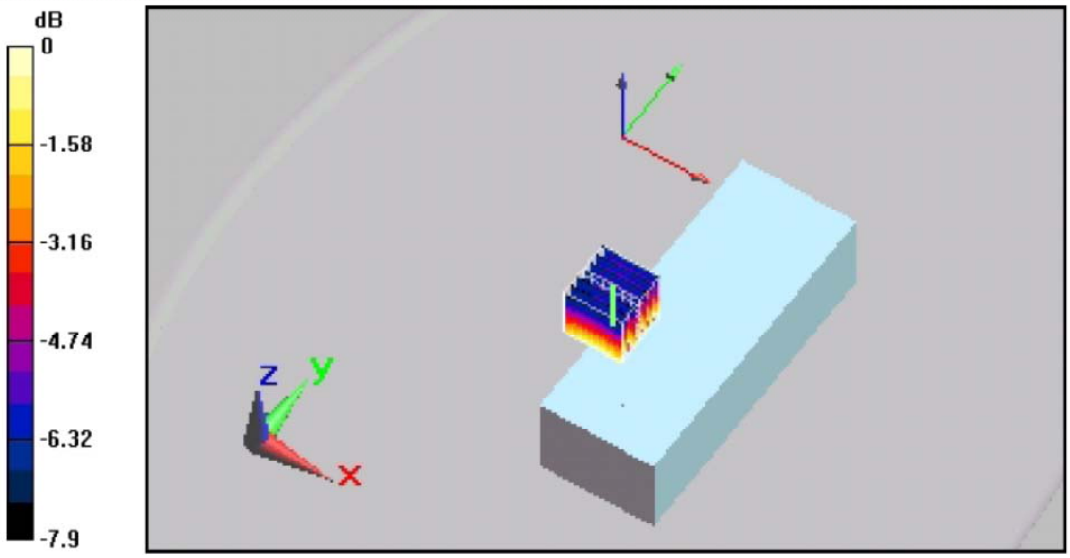

0 dB = 6.47mW/g

< Zoom Scan >

The DASY5 software includes all numerical procedures necessary to evaluate the spatial peak SAR values.

Based on the Draft: SCC-34, SC-2, WG-2 - Computational Dosimetry, IEEE P1529/D0.0 (Draft Recommended Practice for Determining the Spatial-Peak Specific Absorption Rate (SAR) Associated with the Use of Wireless Handsets - Computational Techniques), a new algorithm has been implemented. The spatial-peak SAR can be computed over any required mass.

The base for the evaluation is a "cube" measurement in a volume of (30mm)3 (7x7x7 points). The measured volume must include the 1 g and 10 g cubes with the highest averaged SAR values. For that purpose, the center of the measured volume is aligned to the interpolated peak SAR value of a previously performed area scan. If the 10g cube or both cubes are not entirely inside the measured volumes, the system issues a warning regarding the evaluated spatial peak values within the postprocessing engine (SEMCAD X). This means that if the measured volume is shifted, higher values might be possible. To get the correct values you can use a finer measurement grid for the area scan. In complicated field distributions, a large grid spacing for the area scan might miss some details and give an incorrectly interpolated peak location.

The entire evaluation of the spatial peak values is performed within the postprocessing engine (SEMCAD X). The system always gives the maximum values for the 1 g and 10 g cubes. The algorithm to find the cube with highest averaged SAR is divided into the following stages:

1. extraction of the measured data (grid and values) from the Zoom Scan
2. calculation of the SAR value at every measurement point based on all stored data (A/D values and measurement parameters)
3. generation of a high-resolution mesh within the measured volume
4. interpolation of all measured values from the measurement grid to the high-resolution grid
5. extrapolation of the entire 3-D field distribution to the phantom surface over the distance from sensor to surface

6. calculation of the averaged SAR within masses of 1 g and 10 g

The significant parts are outlined in more detail within the following sections.

5.1.1. Interpolation, Extrapolation and Detection of Maxima

The probe is calibrated at the center of the dipole sensors which is located 1 to 2.7mm away from the probe tip. During measurements, the probe stops shortly above the phantom surface, depending on the probe and the surface detecting system. Both distances are included as parameters in the probe configuration file. The software always knows exactly how far away the measured point is from the surface. As the probe cannot directly measure at the surface, the values between the deepest measured point and the surface must be extrapolated.

In DASY5, the choice of the coordinate system defining the location of the measurement points has no influence on the uncertainty of the interpolation, Maxima Search and extrapolation routines. The interpolation, extrapolation and maximum search routines are all based on the modified Quadratic Shepard's method.

Thereby, the interpolation scheme combines a least-square fitted function method and a weighted average method which are the two basic types of computational interpolation and approximation. The DASY5 routines construct a once-continuously differentiable function that interpolates the measurement values as follows:

- For each measurement point a trivariate (3-D) / bivariate (2-D) quadratic is computed. It interpolates the measurement values at the data point and forms a least-square fit to neighboring measurement values.
- the spatial location of the quadratic with respect to the measurement values is is attenuated by an inverse distance weighting. This is performed since the calculated quadratic will fit measurement values at nearby points more accurate than at points located further away.
- After the quadratics are calculated for at all measurement points, the interpolating function is calculated as a weighted average of the quadratics.

There are two control parameters that govern the behavior of the interpolation method . One specifies the number of measurement points to be used in computing the least-square fits for the local quadratics. These measurement points are the ones nearest the input point for which the quadratic is being computed. The second parameter specifies the number of measurement points that will be used in calculating the weights for the quadratics to produce the final function. The input data points used there are the ones nearest the point at which the interpolation is desired. Appropriate defaults are chosen for each of the control parameters

The trivariate quadratics that have been previously computed for the 3-D interpolation and whose input data are at the closest distance from the phantom surface, are used in order to extrapolate the fields to the surface of the phantom.

In order to determine all the field maxima in 2-D (Area Scan) and 3-D (Zoom Scan), the measurement grid is refined by a default factor of 10 and the interpolation function is used to evaluate all field values between corresponding measurement points. Subsequently, a linear search is applied to find all the candidate maxima. In a last step, non physical maxima are removed and only those maxima which are within 2 dB of the global maximum value are retained.

Important: To be processable by the interpolation/extrapolation scheme, the Area Scan requires at least 6 measurement points. The Cube Scan requires at least 10 measurement points to allow an application of these algorithms.

In the Area Scan, the gradient of the interpolation function is evaluated to find all the extrema of the SAR distribution. The uncertainty on the locations of the extrema is less than 1/20 of the grid size. Only local maxima within -2 dB of the global maximum are searched and passed for the Cube Scan measurement.

In the Cube Scan, the interpolation function is used to extrapolate the Peak SAR from the lowest measurement points to the inner phantom surface (the extrapolation distance). The uncertainty increases with the extrapolation distance. To keep the uncertainty within 1% for the 1 g and 10 g cubes, the extrapolation distance should not be larger than 5mm.

5.1.2. Averaging and Determination of Spatial Peak SAR

The interpolated data is used to average the SAR over the 1g and 10g cubes by spatially discretizing the entire measured volume. The resolution of this spatial grid used to calculate the averaged SAR is 1mm or about 42875 interpolated points. The resulting volumes are defined as cubical volumes containing the appropriate tissue parameters that are centered at the location. The location is defined as the center of the incremental volume (voxel).

The spatial-peak SAR must be evaluated in cubical volumes containing a mass that is within 5% of the required mass. The cubical volume centered at each location, as defined above, should be expanded in all directions until the desired value for the mass is reached, with no surface boundaries of the averaging volume extending beyond the outermost surface of the considered region. In addition, the cubical volume should not consist of more than 10% of air. If these conditions are not satisfied then the center of the averaging volume is moved to the next location. Otherwise, the exact size of the final sampling cube is found using an inverse polynomial approximation algorithm, leading to results with improved accuracy. If one boundary of the averaging volume reaches the boundary of the measured volume during its expansion, it will not be evaluated at all. Reference is kept of all locations used and those not used for averaging the SAR. All average SAR values are finally assigned to the centered location in each valid averaging volume.

All locations included in an averaging volume are marked to indicate that they have been used at least once. If a location has been marked as used, but has never been assigned to the center of a cube, the highest averaged SAR value of all other cubical volumes which have used this location for averaging, is assigned to this location. Only those locations that are not part of any valid averaging volume should be marked as unused. For the case of an unused location, a new averaging volume must be constructed which will have the unused location centered at one surface of the cube. The remaining five surfaces are expanded evenly in all directions until the required mass is enclosed, regardless of the amount of included air. Of the six possible cubes with one surface centered on the unused location, the smallest cube is used, which still contains the required mass.

If the final cube containing the highest averaged SAR touches the surface of the measured volume, an appropriate warning is issued within the postprocessing engine.

5.1.3. Evaluation Errors

5.1.3.1. *Cube shape*

The mentioned procedures search for the maximum averaged 1g and 10g volumes of cubical shape according to the ANSII and ICNIRP standard. A density of 1000 kg/m3 is used to represent the head tissue density and not the tissue simulating liquid density.

5.1.3.2. *Extrapolation*

For the extrapolation the distance must be specified in the Area Scan and Zoom Scan Jobs. The distance is defined as the distance between the probe sensor center and the phantom surface. The recommended distance is 4-5 mm.

5.1.3.3. ***Boundary effects***

The dosimetric probes are calibrated in a gradient field with energy flow and decay in direction of the probe axis. During calibration the probe tip is completely surrounded by the simulating solution. If the probe is used in the immediate vicinity of a media boundary, the field in the probe is altered due to interaction with the field in the boundary and the probe sensitivity changes. The influence of the boundary effect depends on the probe construction, the media parameters and the probe orientation with respect to the boundary. It disappears at a distance of 1mm (E1D-probe) to 5mm (ET3D-probes) between the probe tip and the boundary. The boundary effect must be considered in the extrapolation to the surface.

EXHIBIT 6. MEASUREMENTS, EXAMINATIONS & TEST DATA

6.1. TEST CONFIGURATIONS

D.U.T. Information		Condition	
Product Name	VHF Trarnsceiver	**Robot Type**	6 Axis
Model Number	IC-F1000D	**Scan Type**	SAR – Area/Zoom/Att. Vs Depth
Serial Number	00000214-0	**Measured Field**	E
Frequency Band [MHz]	136 ~ 174	**Phantom Type**	2_{mm} base Flat Phantom
Frequency Tested [MHz]	150,155,156,160,162, 165,168, 170	**Phantom Position**	Waist
Rated Conducted Power [W]	5W (High power mode)	**Room Temperature [°C]**	23.0 ± 1
Antenna Type	*Helical whip stubby antenna(M/N:FA-SC26VS, 136-150 MHz, blue ring) *Helical whip stubby antenna(M/N:FA-SC27VS, 142-150MHz, purple ring) ICOM Helical whip antenna (M/N: FA-SC25V, 136-150 MHz, blue ring) ICOM Helical whip antenna (M/N: FA-SC55V, 150-174 MHz, red ring) ICOM Helical whip stubby antenna (M/N: FA-SC56VS, 150-162 MHz, red ring) ICOM Helical whip stubby antenna (M/N: FA-SC57VS, 160-174 MHz, green ring) ICOM High gain antenna (M/N: FA-SC62V,150-160MHz, brown ring) ICOM High gain antenna (M/N: FA-SC63V,155-165MHz, black ring) ICOM helical whip cut antenna (M/N: FA-SC61VC, 136-174 MHz, white ring)	**Room Humidity [%]**	6 ± 10
Modulation	FM	**Tissue Temperature [°C]**	22.1 ± 1
Worst Case Duty Cycle	50 %		
Duty Cycle Tested	100 %		
Source(or Usage)-Based Time-Average Factor	0.5 (mechanical PTT button)		

*Additional Antenna for SAR re-assessment

Type of Tissue	Brain	Muscle
Test Frequency [MHz]	150	150
Probe Model Number	ES3DV3	ES3DV3
Probe Serial Number	3250	3250
Probe Orientation	Isotropic	Isotropic
Probe Sensor Offset [mm]	2	2
Probe Tip Diameter [mm]	4	4
Conversion Factor (γ)	6.67(- 13.4%)	7.08(+/- 13.4%)

6.2. GENERAL TEST SETUP

6.2.1. Equipment Configuration

Power and signal distribution, grounding, interconnecting cabling and physical placement of equipment of a test system shall simulate the typical application and usage in so far as is practicable, and shall be in accordance with the relevant product specifications of the manufacturer.

The configuration that tends to maximize the D.U.T's emission or minimize its immunity is not usually intuitively obvious and in most instances selection will involve some trial and error testing. For example, interface cables may be moved or equipment re-orientated during initial stages of testing and the effects on the results observed.

Only configurations within the range of positions likely to occur in normal use need to be considered.

The configuration selected shall be fully detailed and documented in the test report, together with the justification for selecting that particular configuration.

6.2.2. Exercising Equipment

The exercising equipment and other auxiliary equipment shall be sufficiently decoupled from the D.U.T. so that the performance of such equipment does not significantly influence the test results.

6.3. PHOTOGRAPHS OF TISSUE DEPTH

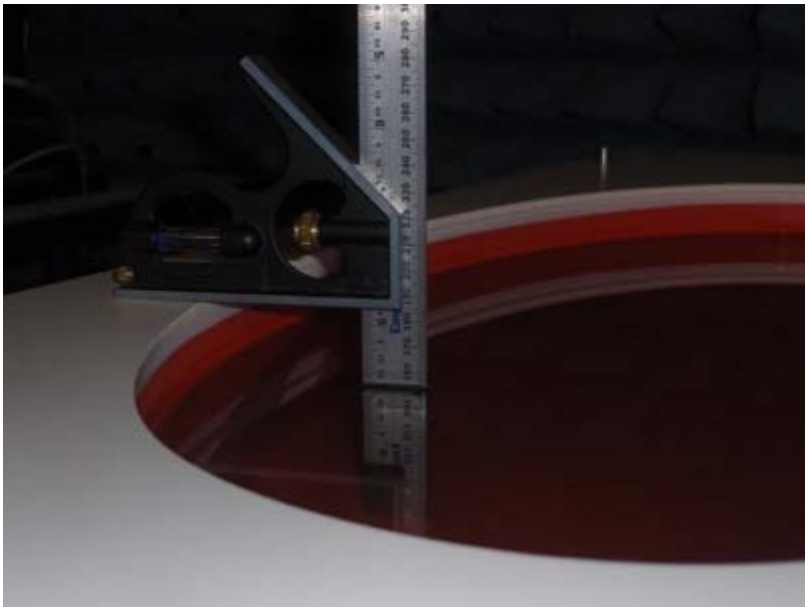

< Phantom filled with head tissue: liquid level = 150mm ± 5mm >

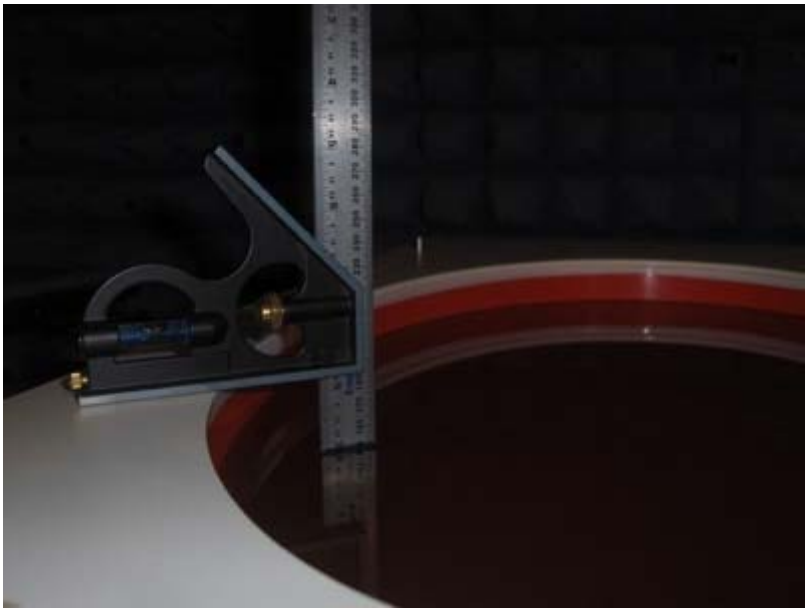

< Phantom filled with body tissue liquid: liquid level = 150mm ± 5mm >

6.4. PHOTOGRAPHS OF D.U.T. POSITION

6.4.1. Head Configuration

6.4.1.1. ***Head-front for fixed antennas: FA-SC26VS Antennas***

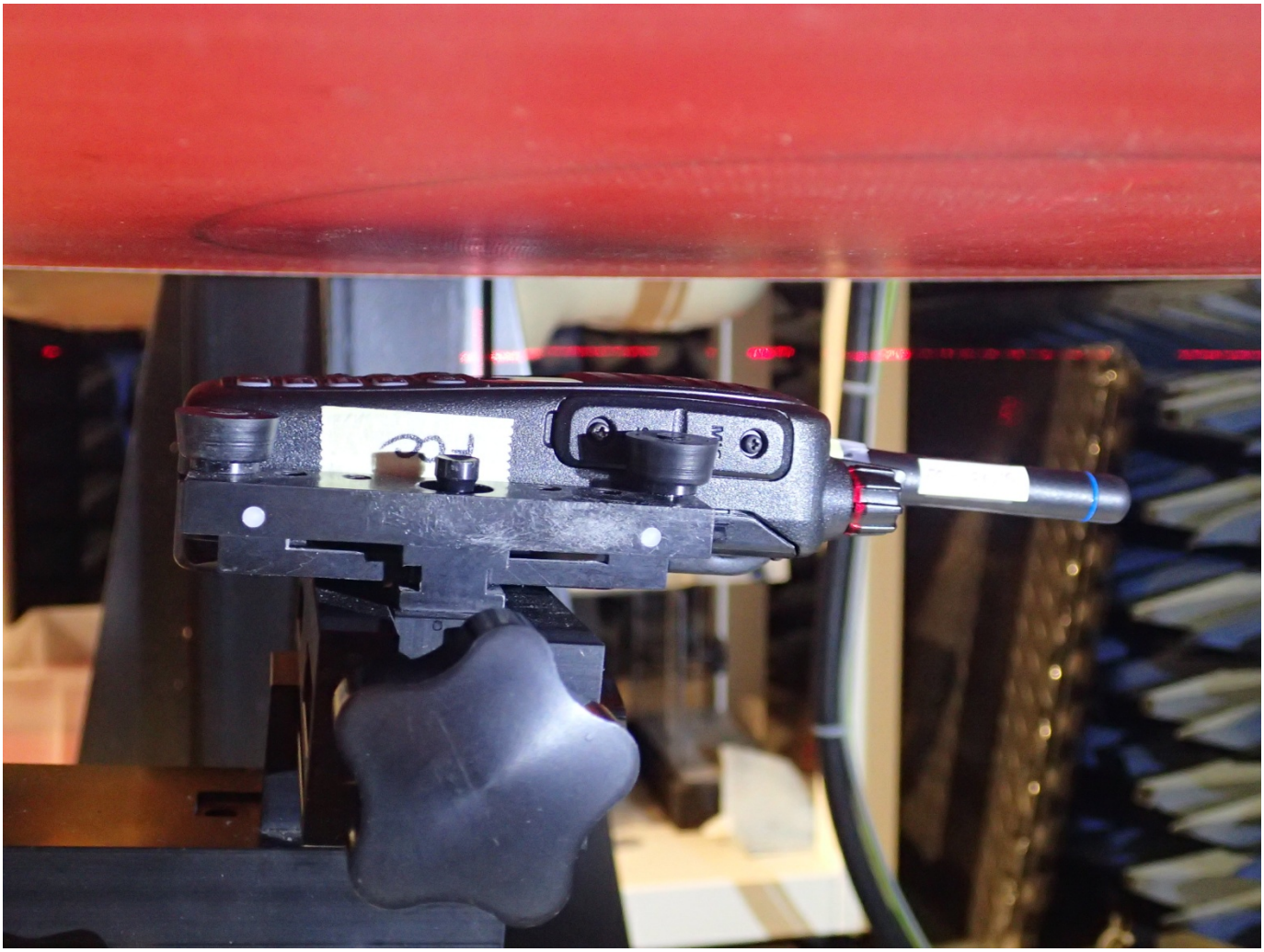

< FA-SC26V: 136MHz~144MHz; Blue Ring>

Remark: Distance between EUT and phantom = 25 mm

6.4.1.2. ***Head-front for fixed antennas: FA-SC27VS Antennas***

< FA-SC27VS: 142MHz~150MHz; Purple Ring>

Remark: Distance between EUT and phantom = 25 mm

6.4.2. Body Configuration

6.4.2.1. *Body-worn for fixed antennas: FA-SC26VS Antennas*

Back side of EUT in parallel to the phantom with the belt-clip in contact, Belt-clip (M/N: MB-133) and Speaker-microphone (M/N: HM-168LWP)

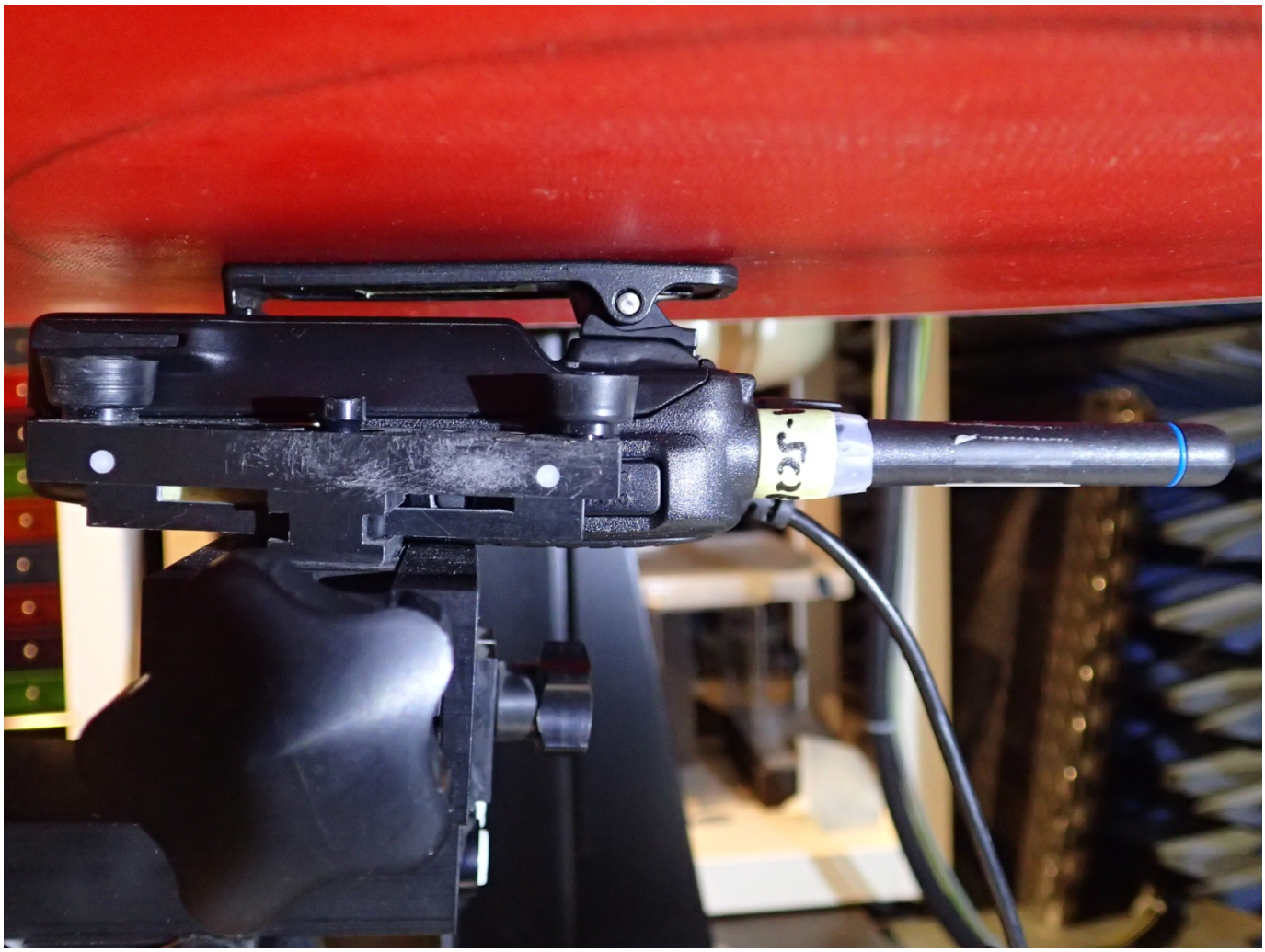

< FA-SC26VS: 136MHz~144Hz; Blue Ring >

Remark: Belt clip touch the phantom bottom

6.4.2.2. ***Body-worn for stubby antennas: FA-SC27VS Antennas***

Back side of EUT in parallel to the phantom with the belt-clip in contact, Belt-clip (M/N: MB-133) and Speaker-microphone (M/N: HM-168LWP)

< FA-SC27VS: 136MHz~144MHz; Purple Ring >

Remark: Belt clip touch the phantom bottom

EXHIBIT 7. SAR MEASUREMENT SYSTEM VERIFICATION

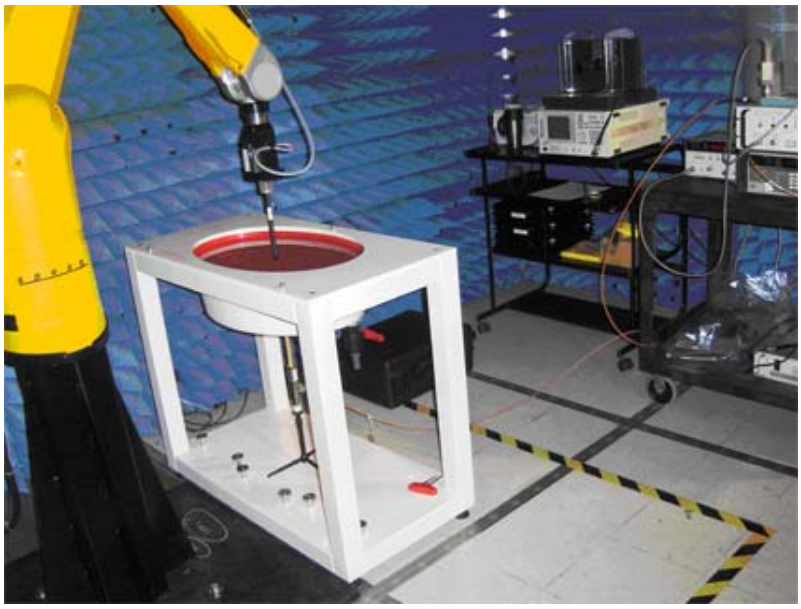

7.1. STANDARD SOURCE

A half-wave dipole is positioned below the bottom of the phantom and centered with its axis parallel to the longest side of the phantom. The distance between the liquid filled phantom bottom surface and the center of the dipole axis, *s*, is chosen as specified IEEE 1528 at the specific test frequency (i.e. 15 mm at 835 MHz). A low loss and low dielectric constant spacer is used to establish the correct distance between the top surface of the dipole and the bottom surface of the phantom.

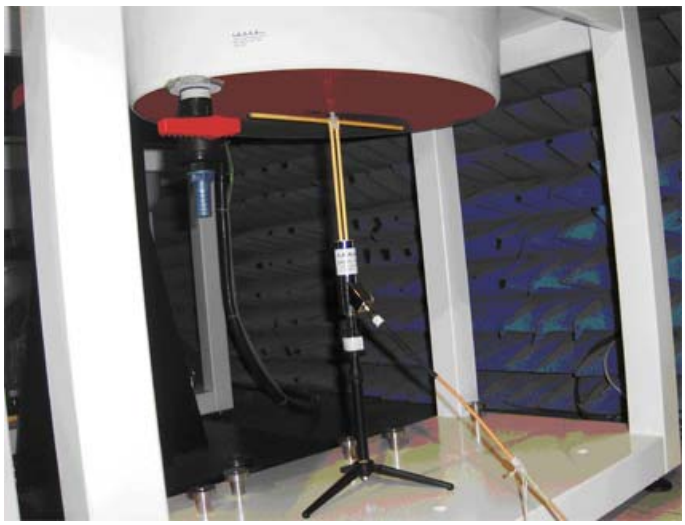

7.2. STANDARD SOURCE INPUT POWER MEASUREMENT

The system validation is performed as shown below or in Figure 7.1 in IEEE 1528.

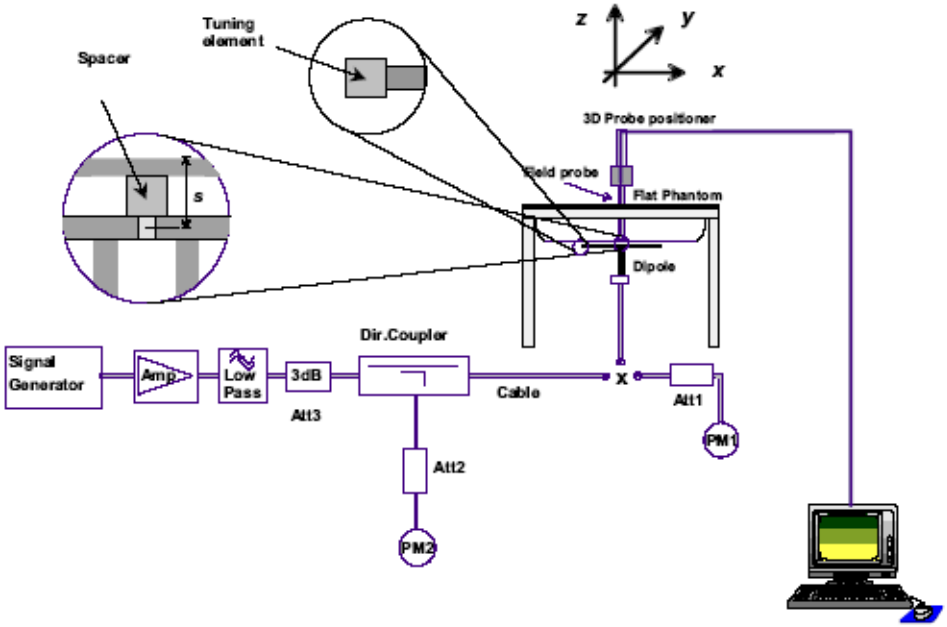

First the power meter PM1 (including attenuator Att1) is connected to the cable to measure the forward power at the location of the dipole connector (X). The signal generator is adjusted for the desired forward power at the dipole connector (taking into account the attenuation of Att1) as read by power meter PM2. After connecting the cable to the dipole, the signal generator is readjusted for the same reading at power meter PM2. If the signal generator does not allow adjustment in 0.01dB steps, the remaining difference at PM2 must be taken into consideration. PM3 records the reflected power from the dipole to ensure that the value is not changed from the previous value. The reflected power was verified to be at least 20dB below the forward power.

7.3. SYSTEM VALIDATION PROCEDURE

A complete 1g-averaged SAR measurement is performed. The measured 1g-averaged SAR value is normalized to a forward power of 1W to a half-wave dipole and compared with the reference SAR value for the reference dipole and flat phantom shown in columns 2 and 3 of Table 7.1 in IEEE 1528.

7.4. VERIFICATION RESULTS

*7.4.1. Reference SAR values at 150 MHz**

		SAR1g			SAR10g		
	Frequency (MHz)	Reference (mw/g)	Measured *	Delta %	Reference (mw/g)	Measured	Delta %
Head	150	3.74	3.79	1.34%	2.5	2.41	-3.60%
Body	150	3.85	3.95	2.60%	2.59	2.54	-1.93%

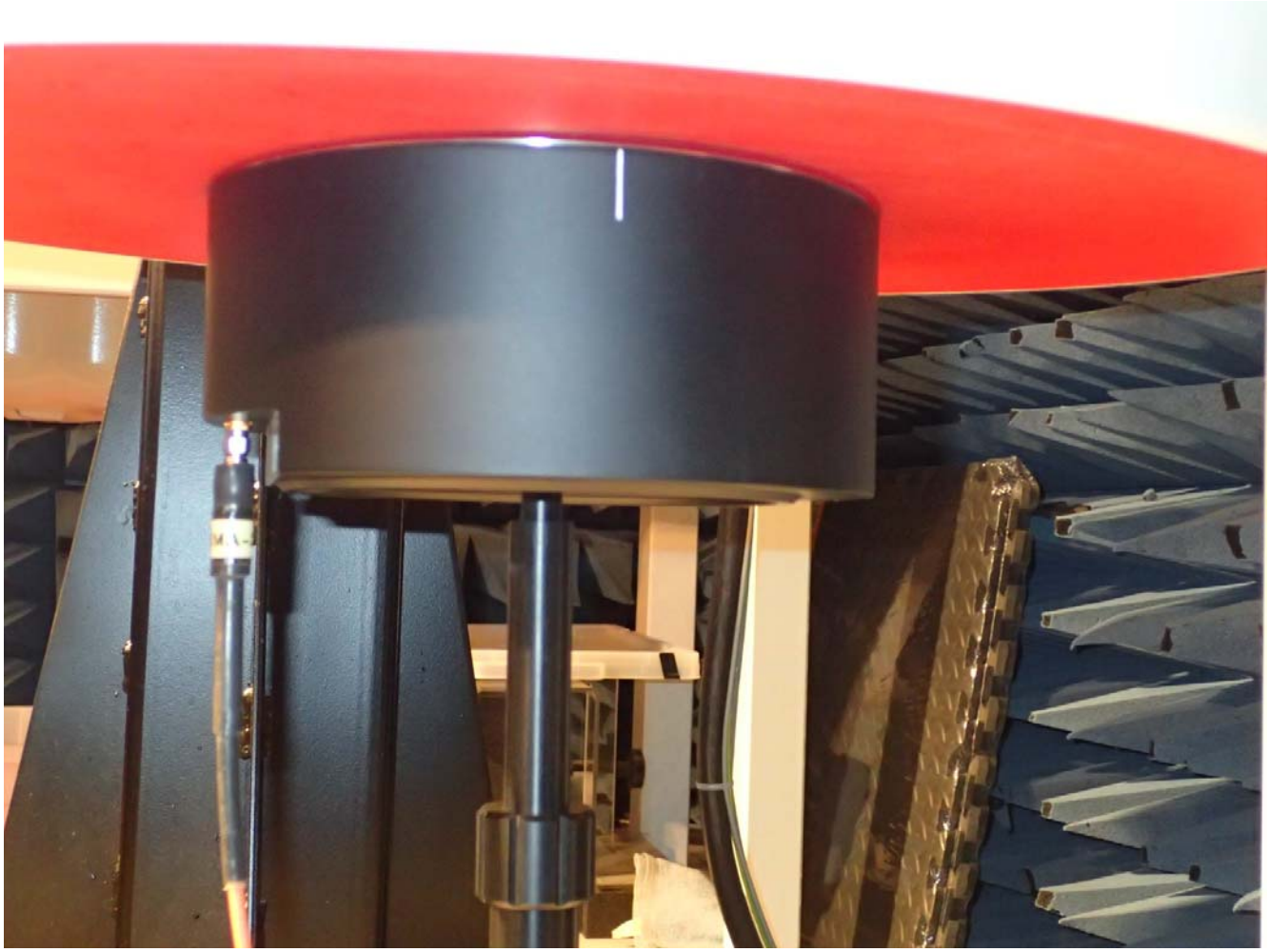

CLA-150, 150MHz Reference Source

7.4.1.1. ***Verification for 150MHz Head Tissue:***

Test Laboratory: Ultratech Group of Labs
File Name: Sys.Ver.Check-D150MHz_ICOM-395Q_Head ES3DV3-SN3250.da52:0

DUT: CLA-150; Type: CLA-150; Serial: 4xxx
Program Name: Program

Communication System: UID 10000, CW; Frequency: 150 MHz;Duty Cycle: 1:1
Medium parameters used: f = 150 MHz; σ = 0.732 S/m; ε_r = 53.14; ρ = 1000 kg/m^3
Phantom section: Flat Section

DASY4 Configuration:
- Probe: ES3DV3 - SN3250; ConvF(7.34, 7.34, 7.34); Calibrated: 3/24/2014;
- Sensor-Surface: 3mm (Mechanical Surface Detection)
- Electronics: DAE4 Sn874; Calibrated: 10/9/2014
- Phantom: ELI 4.0; Type: QD OVA 001 BB; Serial: 1057
- ; SEMCAD X Version 14.6.10 (7331)

CLA Calibration for MSL-LF Tissue_CLA150/touch configuration, Pin=1W (ES-Probe)/Zoom Scan (7x7x7) (7x7x7)/Cube 0: Measurement grid: dx=5mm, dy=5mm, dz=5mm
Reference Value = 77.24 V/m; Power Drift = -0.02 dB
Peak SAR (extrapolated) = 6.32 W/kg
SAR(1 g) = 3.79 W/kg; SAR(10 g) = 2.41 W/kg (SAR corrected for target medium)
Maximum value of SAR (measured) = 4.36 W/kg

CLA Calibration for MSL-LF Tissue_CLA150/touch configuration, Pin=1W (ES-Probe)/Area Scan (81x81x1): Interpolated grid: dx=1.500 mm, dy=1.500 mm
Maximum value of SAR (interpolated) = 4.39 W/kg

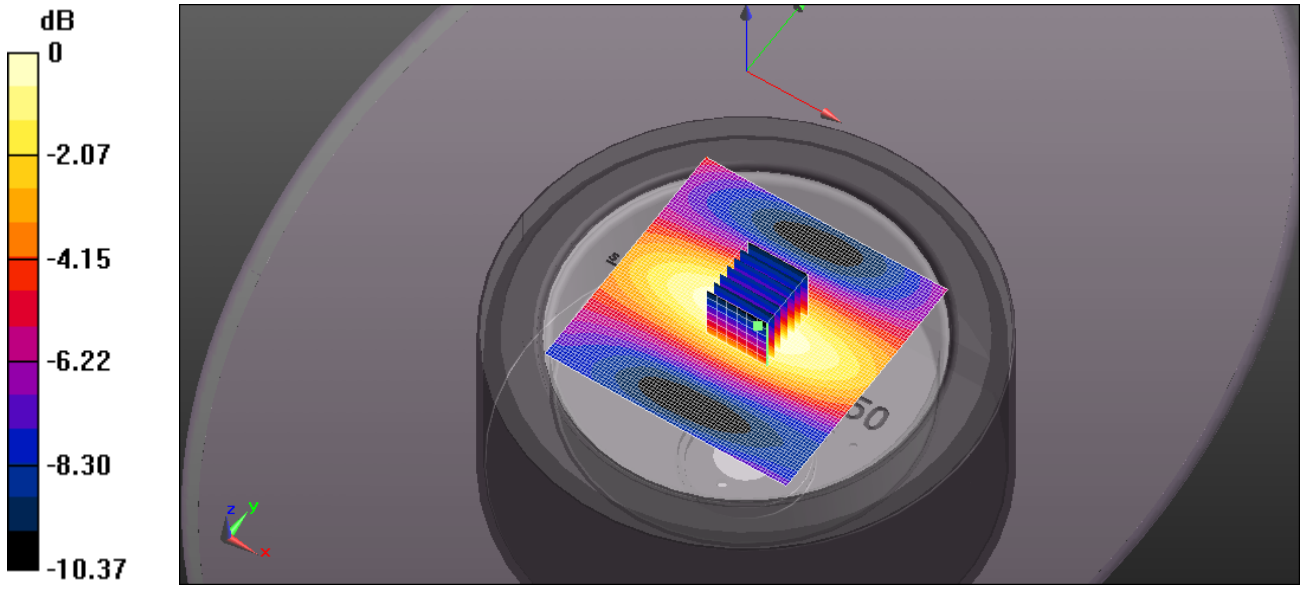

0 dB = 4.36 W/kg = 6.40 dBW/kg

7.4.1.2. ***Verification for 150MHz Body Tissue:***

Test Laboratory: Ultratech Group of Labs
File Name: Sys.Ver.Check-D150MHz_ICOM-395Q_Body ES3DV3-SN3250.da52:0

DUT: CLA-150; Type: CLA-150; Serial: 4xxx
Program Name: Program

Communication System: UID 10000, CW; Frequency: 150 MHz;Duty Cycle: 1:1
Medium parameters used: f = 150 MHz; σ = 0.788 S/m; ε_r = 61.973; ρ = 1000 kg/m^3
Phantom section: Flat Section

DASY4 Configuration:
- Probe: ES3DV3 - SN3250; ConvF(6.85, 6.85, 6.85); Calibrated: 3/24/2014;
- Sensor-Surface: 3mm (Mechanical Surface Detection)
- Electronics: DAE4 Sn874; Calibrated: 10/9/2014
- Phantom: ELI 4.0; Type: QD OVA 001 BB; Serial: 1057
- ; SEMCAD X Version 14.6.10 (7331)

CLA Calibration for MSL-LF Tissue_CLA150/touch configuration, Pin=1W (ES-Probe)/Zoom Scan (7x7x7) (7x7x7)/Cube 0: Measurement grid: dx=5mm, dy=5mm, dz=5mm
Reference Value = 76.73 V/m; Power Drift = -0.05 dB
Peak SAR (extrapolated) = 6.66 W/kg
SAR(1 g) = 3.95 W/kg; SAR(10 g) = 2.54 W/kg (SAR corrected for target medium)
Maximum value of SAR (measured) = 4.64 W/kg

CLA Calibration for MSL-LF Tissue_CLA150/touch configuration, Pin=1W (ES-Probe)/Area Scan (81x81x1): Interpolated grid: dx=1.500 mm, dy=1.500 mm
Maximum value of SAR (interpolated) = 4.72 W/kg

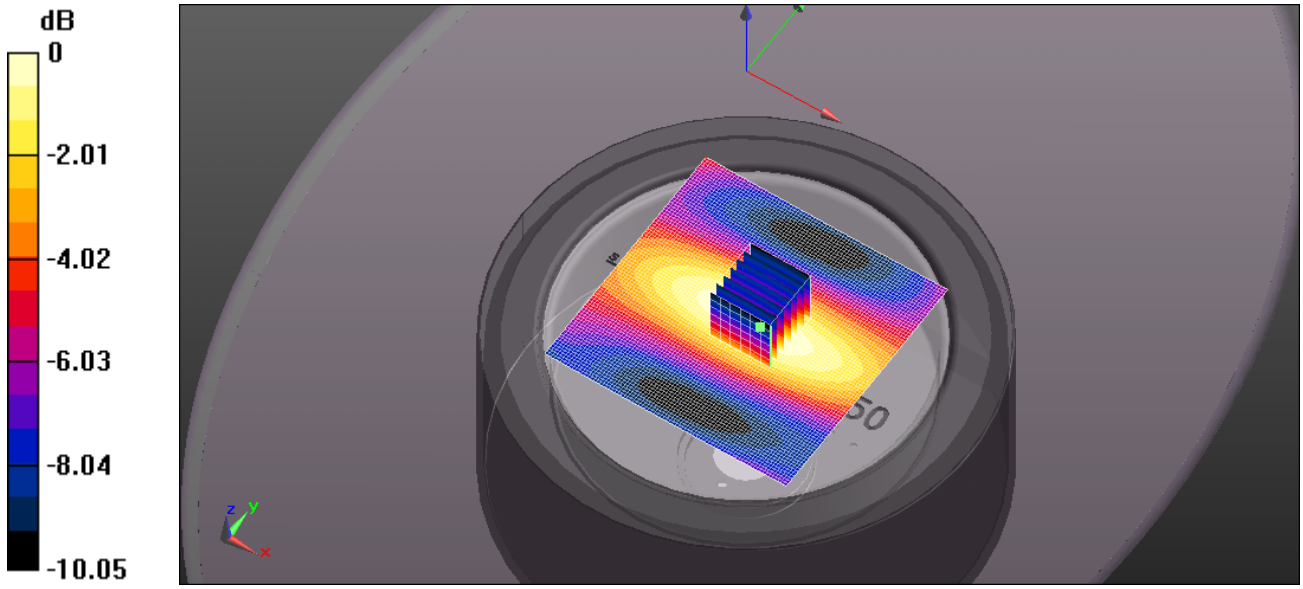

0 dB = 4.64 W/kg = 6.66 dBW/kg

7.4.2. D.U.T. Power Measurement

Whenever possible, a conducted power measurement is performed. To accomplish this, we utilize a fully charged battery, a calibrated power meter and a cable adapter provided by the manufacturer. The data of the cable and related circuit losses are also provided by the manufacturer. The power measurement is then performed across the operational band and the channel with the highest output power is recorded.

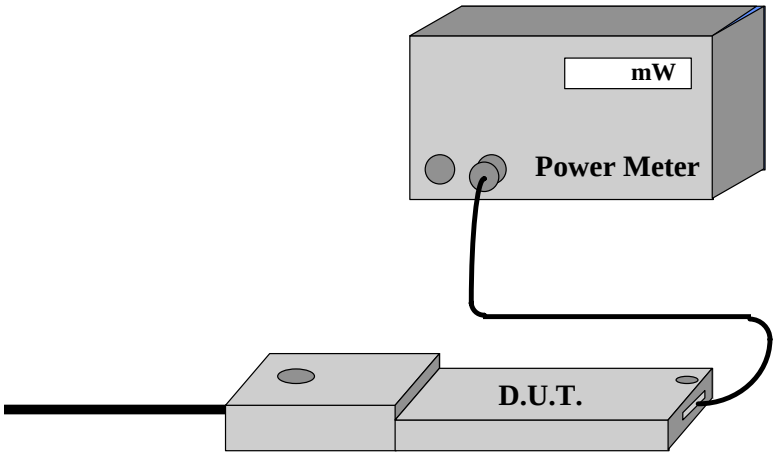

Power measurement is performed before and after the SAR to verify if the battery was delivering full power at the time of testing. A difference in output power would determine a need for battery replacement and to repeat the SAR test.

7.5. RF CONDUCTED OUTPUT POWER MEASUREMENT

Channel Number	Frequency (MHz)	Power (W)
1	136	5.13
2	140	5.36
3	142	5.48
4	143	5.51
5	144	5.51
6	146	5.5
7	150	5.38
8	155	5.17
9	156	5.17
10	160	5.13
11	162	5.08
12	165	5.08
13	166	5.07
14	168	5.05
15	170	5.06
16	174	5.16

7.6. SIMULATED TISSUE

Simulated Tissue: Suggested in a paper by George Hartsgrove and colleagues in University of Ottawa Ref.: Bioelectromagnetics 8:29-36 (1987)

Ingredient	Quantity
Water	40.4 %
Sugar	56.0 %
Salt	2.5 %
HEC	1.0 %
Bactericide	0.1 %

Table 7.6 Example of composition of simulated tissue

This simulated tissue is mainly composed of water, sugar and salt. At higher frequencies, in order to achieve the proper conductivity, the solution does not contain salt. Also, at these frequencies, D.I. water and alcohol is preferred.

Target Frequency (MHz)	Head		Body	
	ε_r	σ (S/m)	ε_r	σ (S/m)
150	52.3	0.76	61.9	0.80
300	45.3	0.87	58.2	0.92
450	43.5	0.87	56.7	0.94
835	41.5	0.90	55.2	0.97
900	41.5	0.97	55.0	1.05
915	41.5	0.98	55.0	1.06
1450	40.5	1.20	54.0	1.30
1610	40.3	1.29	53.8	1.40
1800 – 2000	40.0	1.40	53.3	1.52
2450	39.2	1.80	52.7	1.95
3000	38.5	2.40	52.0	2.73
5800	35.3	5.27	48.2	6.00

(ε_r = relative permittivity, σ = conductivity and ρ = 1000 Kg/m^3)*

* The actual mass density of the equivalent tissue varies based on the composition of the tissue from 990 Kg/m^3 to 1,300 Kg/m^3.

7.7. MEASUREMENT OF ELECTRICAL CHARACTERISTICS OF SIMULATED TISSUE

HP Dielectric Strength Probe System (open-ended coaxial transmission-line probe/sensor) was used.

7.7.1. Equipment set-up

The equipment consists of a probe connected to one port of a vector network analyzer. The probe is an open-ended coaxial line, as shown in Figure 9.2.1.1. Cylindrical coordinates (ρ, ϕ, z) are used where ρ is the radial distance from the axis, ϕ is the angular displacement around the axis, z is the displacement along the axis, a is the inner conductor radius, and b is the outer conductor inner radius.

The sample holder is a non-metallic container that is large compared with the size of the probe immersed in it. A probe with an outer diameter b of 2 to 4 mm is suitable for the measurement of tissue-equivalent materials in the 300 MHz to 3 GHz frequency range. This probe size is commensurate with sample volumes of 50 cc or higher. Larger probes of up to 7 mm outer diameter b may be used with larger sample volumes. A flange is typically included to better represent the infinite ground-plane assumption used in admittance calculations.

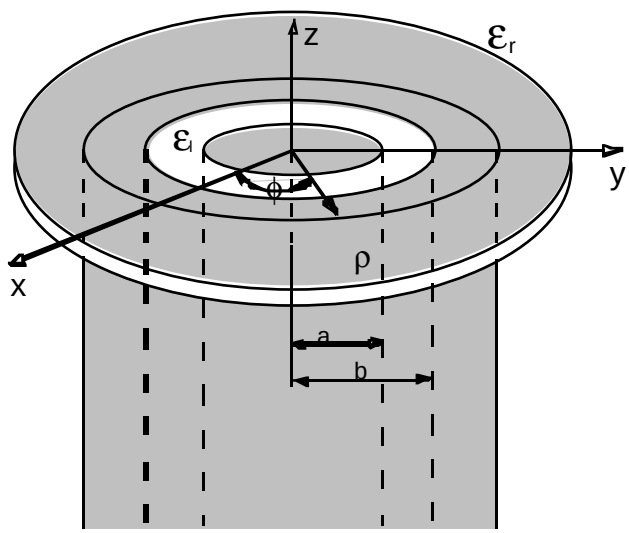

Figure Error! Reference source not found.. An open-ended coaxial probe with inner and outer radii a and b, respectively

The accuracy of the short-circuit measurement should be verified for each calibration at a number of frequencies. A short circuit can be achieved by gently pressing a piece of aluminum foil against the open end. For best electrical contact, the probe end should be flat and free of oxidation. Larger the sensors generally have better foil short-circuit repeatability. It is possible to obtain good contact with some commercial 4.6 mm probes using the metal-disk short-circuit supplied with the kit. For best repeatability, it may be necessary to press the disk by hand.

The network analyzer is configured to measure the magnitude and phase of the admittance. A one-port reflection calibration is performed at the plane of the probe by placing materials for which the reflection coefficient can be calculated in contact with the probe. Three standards are needed for the calibration, typically a short circuit, air, and de-ionized water at a well-defined temperature (other reference liquids such as methanol or ethanol may be used for calibration). The calibration is a key part of the measurement procedure, and it is therefore important to ensure that it

has been performed correctly. It can be checked by re-measuring the short circuit to ensure that a reflection coefficient of Γ = -1.0 (linear units) is obtained consistently.

7.7.2. Measurement procedure

a) Configure and calibrate the network analyzer and probe system.

b) Place the sample in a non-metallic container and immerse the probe. A fixture or clamp is recommended to stabilize the probe, mounted such that the probe face is at an angle with respect to the liquid surface to minimize trapped air bubbles beneath the flange.

c) Measure the complex admittance with respect to the probe aperture.

d) Compute the complex relative permittivity $\varepsilon_r = \varepsilon_r' - j\sigma/\omega\varepsilon_0$.

7.8. SIMULATED TISSUE MEASUREMENT RESULTS

Tissue calibration type	HP Dielectric Strength Probe System (M/N: 85070C)	
Tissue calibration date [MM/DD/YYYY]	5/Jan/2015	1/Jan/2015
Tissue calibrated by	Natasha Kee	Max Kee
Room temperature [°C]	20.0	21.6
Room humidity [%]	13	6
Simulated tissue temperature [°C]	22	21
Tissue calibration frequency [MHz]	150	150
Tissue Type	Brain	Muscle
Target conductivity [S/m]	0.76	0.80
Target dielectric constant	52.3	61.9
Composition (by weight) [%]	DI Water (39.0 %) Sugar (55.5%) Salt (5.5 %) HEC (0.25 %) Bactericide (0.92 %)	DI Water (50.0 %) Sugar (47.5 %) Salt (2.3 %) HEC (0.13 %) Bactericide (0.44 %)
Measured conductivity [S/m]	0.73 (-3.7%)	0.79 (-1.5 %)
Measured dielectric constant	53.7(2.7%)	60.5(-2.3 %)
Penetration depth (plane wave excitation) [mm]	61.3	64.1

7.8.1. 150 MHz Tissue

Frequency [MHz]	Meas. after 5min			DI Water at 20°C			Init. Meas.		
	ε'	ε''	σ [S/m]	ε'	ε''	σ [S/m]	ε'	ε''	σ [S/m]
120.000	54.6731	106.2335	0.71	79.0767	0.6032	0.00	54.3964	104.8247	0.70
150.000	53.1339	87.7019	0.73	79.0720	0.3996	0.00	53.1898	86.7731	0.72
180.000	51.9360	75.1930	0.75	79.0287	0.3374	0.00	51.8956	74.6493	0.75
120.000	63.1136	115.7772	0.77	80.4885	0.6131	0.00	93.1707	113.3115	0.76
150.000	61.9732	94.4294	0.79	80.4992	0.4044	0.00	62.0365	93.0516	0.78
180.000	61.2145	81.1777	0.81	80.3714	0.2174	0.00	61.4286	80.4688	0.81

EXHIBIT 8. SAR MEASUREMENT UNCERTAINTY

8.1. MEASUREMENT UNCERTAINTY EVALUATION FOR SAR TEST

Error Description	Uncertainty value	Prob. Dist.	Div.	(c_i) 1g	(c_i) 10g	Std. Unc. (1g)	Std. Unc. (10g)	(vi) v_{eff}
Measurement System								
Probe Calibration	±5.5 %	N	1	1	1	±5.5 %	±5.5 %	∞
Axial Isotropy	±4.7 %	R	$\sqrt{3}$	0.7	0.7	±1.9 %	±1.9 %	∞
Hemispherical Isotropy	±9.6 %	R	$\sqrt{3}$	0.7	0.7	±3.9 %	±3.9 %	∞
Boundary Effects	±1.0 %	R	$\sqrt{3}$	1	1	±0.6 %	±0.6 %	∞
Linearity	±4.7 %	R	$\sqrt{3}$	1	1	±2.7 %	±2.7 %	∞
System Detection Limits	±1.0 %	R	$\sqrt{3}$	1	1	±0.6 %	±0.6 %	∞
Readout Electronics	±0.3 %	R	$\sqrt{3}$	1	1	±0.3 %	±0.3 %	∞
Response Time	±0.8 %	N	1	1	1	±0.5 %	±0.5 %	∞
Integration Time	±2.6 %	R	$\sqrt{3}$	1	1	±1.5 %	±1.5 %	∞
RF Ambient Noise	±3.0 %	R	$\sqrt{3}$	1	1	±1.7 %	±1.7 %	∞
RF Ambient Reflections	±3.0 %	R	$\sqrt{3}$	1	1	±1.7 %	±1.7 %	∞
Probe Positioner	±0.4 %	R	$\sqrt{3}$	1	1	±0.2 %	±0.2 %	∞
Probe Positioning	±2.9 %	R	$\sqrt{3}$	1	1	±1.7 %	±1.7 %	∞
Max. SAR Eval.	±1.0 %	R	$\sqrt{3}$	1	1	±0.6 %	±0.6 %	∞
Test Sample Related								
Device Positioning	±2.9 %	N	1	1	1	±2.9 %	±2.9 %	145
Device Holder	±3.6 %	N	1	1	1	±3.6 %	±3.6 %	5
Power Drift	±5.0 %	R	$\sqrt{3}$	1	1	±2.9 %	±2.9 %	∞
Phantom and Setup								
Phantom Uncertainty	±4.0 %	R	$\sqrt{3}$	1	1	±2.3 %	±2.3 %	∞
Liquid Conductivity (target)	±5.0 %	R	$\sqrt{3}$	0.64	0.43	±1.8 %	±1.2 %	∞
Liquid Conductivity (meas.)	±2.5 %	N	1	0.64	0.43	±1.6 %	±1.1 %	∞
Liquid Permittivity (target)	±5.0 %	R	$\sqrt{3}$	0.6	0.49	±1.7 %	±1.4 %	∞
Liquid Permittivity (meas.)	±2.5 %	N	1	0.6	0.49	±1.5 %	±1.2 %	∞
Combined Std. Uncertainty						±10.7 %	±10.5 %	387
Expanded STD Uncertainty						**±21.4 %**	**±21.0 %**	

- *All test results contained in this engineering test report are traceable to National Institute of Standards and Technology (NIST)*

EXHIBIT 9. ADDITIONAL TEST INSTRUMENTS LIST

Name	Type	Serial Number (SN)	Calibration Due Date
Signal Generator(Rohde & Schwartz)	SMIQ06B	DE26709	Apr 02, 2015
Loop Antenna(Speag)	CL-150	4006	Dec 3, 2016
Data Acquisition Equipment (Speag)	DAE4	874	Oct 9, 2015
SAR Probe(Speag)	ESX3DV3	3250	Aug 19, 2015
Power Meter(HP)	HP 438A	3008A06729	Apr 10, 2015
Directional Coupler (narda)	Model 3020A	35482	Cal on use
Network Analyzer (HP)	8753D	3410A06430	Feb 11, 2015
Wide Band Amplifier (Instrument for Industry)	Model 5300	-------	N/A

EXHIBIT 10. SAR MEASUREMENT DATA

See Appendix 1

EXHIBIT 11. SPEAG DASY 5.2 CALIBRATION CERTIFICATES

See Appendix 2.

EXHIBIT 12. BODY WORN ACCESSORIES

See Appendix 3.