APPENDIX 1

SAR Measurement Data

3000 Bristol Circle, Oakville, Ontario, Canada L6H 6G4
Tel. #: 905-829-1570, Fax. #: 905-829-8050, Email: vic@ultratech-labs.com, Website: http://www.ultratech-labs.com

Table of Contents

EXHIBIT 1. PRESCAN MEASUREMENT SUMMARY 3

File Name: ICOM-458Q FA-B02AR 127.5MHz MB-133.da52:0 4
File Name: ICOM-458Q FA-B02AR 127.5MHz MB-96N.da52:0 5

EXHIBIT 2. SAR MEASUREMENTS RESULTS 6

EXHIBIT 3. HEAD MEASUREMENTS 7

File Name: ICOM-458Q FA-B02AR 118MHz.da52:0 7
File Name: ICOM-458Q FA-B02AR 122.75MHz.da52:0 8
File Name: ICOM-458Q FA-B02AR 127.5MHz.da52:0 9
File Name: ICOM-458Q FA-B02AR 132.25MHz.da52:0 10
File Name: ICOM-458Q FA-B02AR 137MHz.da52:0 11

EXHIBIT 4. BODY MEASUREMENTS 12

File Name: ICOM-458Q FA-B02AR 118MHz.da52:0 12
File Name: ICOM-458Q FA-B02AR 122.75MHz.da52:0 13
File Name: ICOM-458Q FA-B02AR 127.5MHz MB-133.da52:0 14
File Name: ICOM-458Q FA-B02AR 132.25MHz.da52:0 15
File Name: ICOM-458Q FA-B02AR 137MHz.da52:0 16

EXHIBIT 1. PRESCAN MEASUREMENT SUMMARY

Belt Clip	Antenna	Power (dBm)	CH	CH. Freq (MHz)	BODY SAR1g (W/Kg) BP-288 2200mAh	BODY SAR10g (W/Kg) BP-288 2200mAh
MB-133	FA-B02AR	32.84	3	127.5	0.637	0.493
MB-96N		32.84	3	127.5	0.336	0.264

Test Laboratory: Ultratech Group of Labs

File Name: ICOM-458Q FA-B02AR 127.5MHz MB-133.da52:0

DUT: IC-A25N; Type: VHF Transceiver; Serial: 00000107

Communication System: UID 0, CW (0); Frequency: 127.5 MHz; Duty Cycle: 1:1
Medium parameters used: f = 128 MHz; σ = 0.792 S/m; ε_r = 60.879; ρ = 1000 kg/m^3 ; Phantom section: Flat Section ; Measurement Standard: DASY5 (IEEE/IEC/ANSI C63.19-2007)

DASY Configuration:

- Probe: EX3DV4 - SN3673; ConvF(10.93, 10.93, 10.93); Calibrated: 3/20/2017;
- Sensor-Surface: 3mm (Mechanical Surface Detection)
- Electronics: DAE4 Sn874; Calibrated: 8/22/2016
- Phantom: ELI 4.0; Type: QD OVA 001 BB; Serial: 1057
- DASY52 52.8.8(1222); SEMCAD X 14.6.10(7331)

Configuration_Body_IC-A25N/Body Back, P=5W, d=0mm/Area Scan (61x161x1):

Interpolated grid: dx=1.500 mm, dy=1.500 mm
Maximum value of SAR (interpolated) = 0.706 W/kg

Configuration_Body_IC-A25N/Body Back, P=5W, d=0mm/Zoom Scan (5x5x7) (6x6x7)/Cube 0:

Measurement grid: dx=7.5mm, dy=7.5mm, dz=5mm
Reference Value = 11.67 V/m; Power Drift = -0.14 dB
Peak SAR (extrapolated) = 0.831 W/kg
SAR(1 g) = 0.637 W/kg; SAR(10 g) = 0.493 W/kg (SAR corrected for target medium)
Maximum value of SAR (measured) = 0.698 W/kg

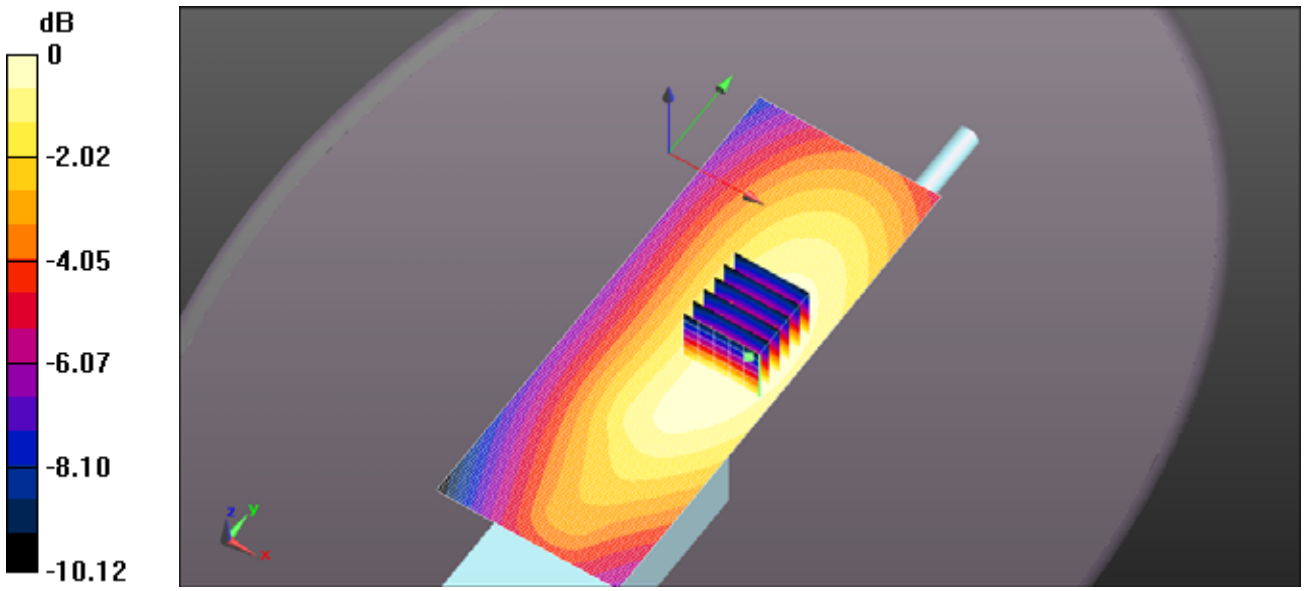

0 dB = 0.706 W/kg = -1.51 dBW/kg

Test Laboratory: Ultratech Group of Labs

File Name: ICOM-458Q FA-B02AR 127.5MHz MB-96N.da52:0

DUT: IC-A25N; Type: VHF Transceiver; Serial: 00000107

Communication System: UID 0, CW (0); Frequency: 127.5 MHz; Duty Cycle: 1:1
Medium parameters used: f = 128 MHz; σ = 0.792 S/m; ε_r = 60.879; ρ = 1000 kg/m^3 ; Phantom section: Flat Section ; Measurement Standard: DASY5 (IEEE/IEC/ANSI C63.19-2007)

DASY Configuration:

- Probe: EX3DV4 - SN3673; ConvF(10.93, 10.93, 10.93); Calibrated: 3/20/2017;
- Sensor-Surface: 3mm (Mechanical Surface Detection)
- Electronics: DAE4 Sn874; Calibrated: 8/22/2016
- Phantom: ELI 4.0; Type: QD OVA 001 BB; Serial: 1057
- DASY52 52.8.8(1222); SEMCAD X 14.6.10(7331)

Configuration_Body_IC-A25N/Body Back, P=5W, d=0mm/Area Scan (61x161x1):

Interpolated grid: dx=1.500 mm, dy=1.500 mm
Maximum value of SAR (interpolated) = 0.370 W/kg

Configuration_Body_IC-A25N/Body Back, P=5W, d=0mm/Zoom Scan (5x5x7) (6x6x7)/Cube 0:

Measurement grid: dx=7.5mm, dy=7.5mm, dz=5mm
Reference Value = 8.675 V/m; Power Drift = -0.11 dB
Peak SAR (extrapolated) = 0.430 W/kg
SAR(1 g) = 0.336 W/kg; SAR(10 g) = 0.264 W/kg (SAR corrected for target medium)
Maximum value of SAR (measured) = 0.367 W/kg

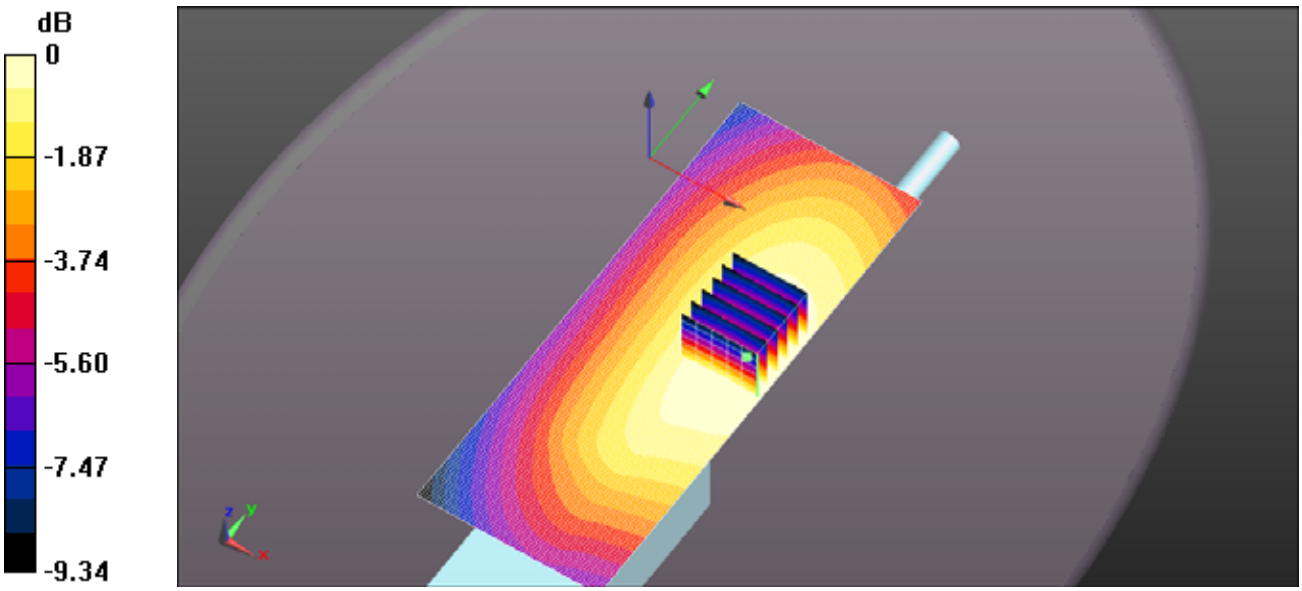

0 dB = 0.370 W/kg = -4.32 dBW/kg

EXHIBIT 2. SAR MEASUREMENTS RESULTS

Antenna	Power (dBm)	CH	CH. Freq	HEAD SAR1g (W/Kg)	HEAD SAR10g (W/Kg)	BODY SAR1g (W/Kg)	BODY SAR10g (W/Kg)
				BP-288	BP-288	BP-288	BP-288
			(MHz)	2200mAh	2200mAh	2200mAh	2200mAh
FA-B02AR	32.63	1	118	0.237	0.188	0.339	0.263
	32.71	2	122.75	0.31	0.248	0.434	0.337
	32.84	3	127.5	0.571	0.456	0.637	0.493
	32.63	4	132.25	1.07	0.852	0.565	0.437
	32.59	5	137	0.816	0.648	0.136	0.104

EXHIBIT 3. HEAD MEASUREMENTS

File Name: ICOM-458Q FA-B02AR 118MHz.da52:0

DUT: IC-F52D; Type: VHF Transceiver; Serial: 00000107

Communication System: UID 0, CW (0); Frequency: 118 MHz; Duty Cycle: 1:1
Medium parameters used (extrapolated): f = 118 MHz; σ = 0.704 S/m; ε_r = 54.264; ρ = 1000 kg/m^3 ;
Phantom section: Flat Section ; Measurement Standard: DASY5 (IEEE/IEC/ANSI C63.19-2007)

DASY Configuration:

- Probe: EX3DV4 - SN3673; ConvF(11.15, 11.15, 11.15); Calibrated: 3/20/2017;
- Sensor-Surface: 3mm (Mechanical Surface Detection)
- Electronics: DAE4 Sn874; Calibrated: 8/22/2016
- Phantom: ELI 4.0; Type: QD OVA 001 BB; Serial: 1057
- DASY52 52.8.8(1222); SEMCAD X 14.6.10(7331)

Configuration_Head_IC-A25N/Head Front, P=5W, d=25mm/Area Scan (61x161x1):

Interpolated grid: dx=1.500 mm, dy=1.500 mm
Maximum value of SAR (interpolated) = 0.267 W/kg

Configuration_Head_IC-A25N/Head Front, P=5W, d=25mm/Zoom Scan (5x5x7) (6x6x7)/Cube 0:

Measurement grid: dx=7.5mm, dy=7.5mm, dz=5mm
Reference Value = 14.96 V/m; Power Drift = -0.13 dB
Peak SAR (extrapolated) = 0.301 W/kg
SAR(1 g) = 0.237 W/kg; SAR(10 g) = 0.188 W/kg (SAR corrected for target medium)
Maximum value of SAR (measured) = 0.258 W/kg

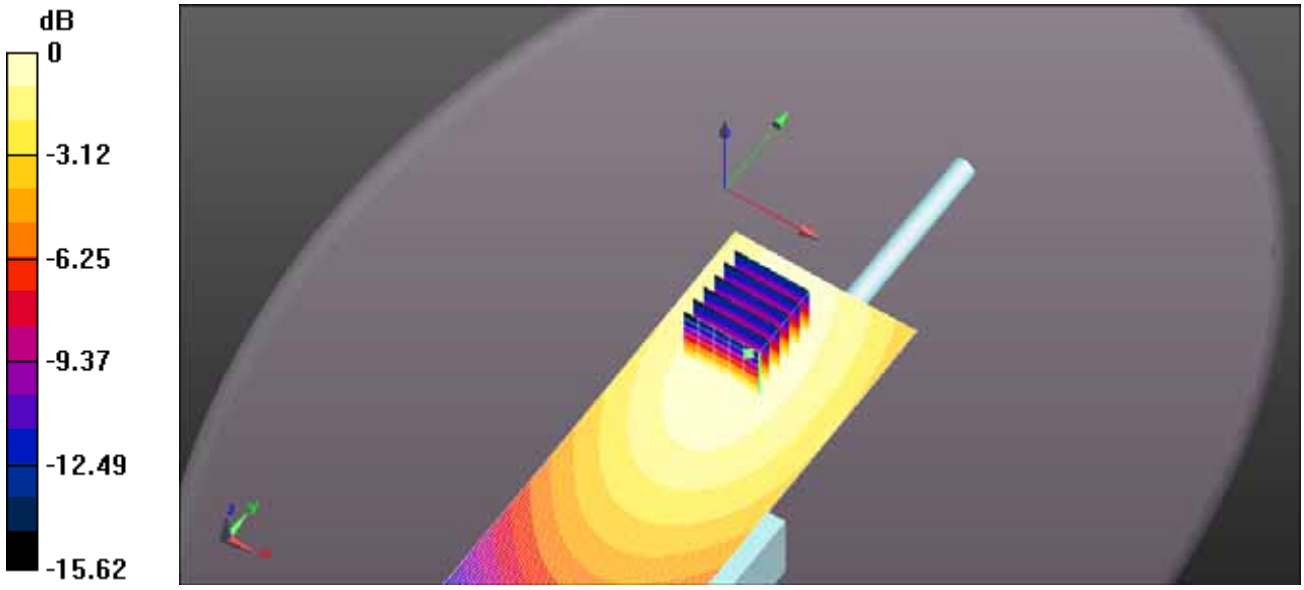

0 dB = 0.267 W/kg = -5.74 dBW/kg

Test Laboratory: Ultratech Group of Labs

File Name: ICOM-458Q FA-B02AR 122.75MHz.da52:0

DUT: IC-F52D; Type: VHF Transceiver; Serial: 00000107

Communication System: UID 0, CW (0); Frequency: 122.75 MHz; Duty Cycle: 1:1
Medium parameters used (interpolated): f = 122.75 MHz; σ = 0.708 S/m; ε_r = 54.024; ρ = 1000 kg/m^3 ;
Phantom section: Flat Section ; Measurement Standard: DASY5 (IEEE/IEC/ANSI C63.19-2007)

DASY Configuration:

- Probe: EX3DV4 - SN3673; ConvF(11.15, 11.15, 11.15); Calibrated: 3/20/2017;
- Sensor-Surface: 3mm (Mechanical Surface Detection)
- Electronics: DAE4 Sn874; Calibrated: 8/22/2016
- Phantom: ELI 4.0; Type: QD OVA 001 BB; Serial: 1057
- DASY52 52.8.8(1222); SEMCAD X 14.6.10(7331)

Configuration_Head_IC-A25N/Head Front, P=5W, d=25mm/Area Scan (61x161x1):

Interpolated grid: dx=1.500 mm, dy=1.500 mm
Maximum value of SAR (interpolated) = 0.350 W/kg

Configuration_Head_IC-A25N/Head Front, P=5W, d=25mm/Zoom Scan (5x5x7) (6x6x7)/Cube 0:

Measurement grid: dx=7.5mm, dy=7.5mm, dz=5mm
Reference Value = 14.20 V/m; Power Drift = -0.13 dB
Peak SAR (extrapolated) = 0.392 W/kg
SAR(1 g) = 0.310 W/kg; SAR(10 g) = 0.248 W/kg (SAR corrected for target medium)
Maximum value of SAR (measured) = 0.338 W/kg

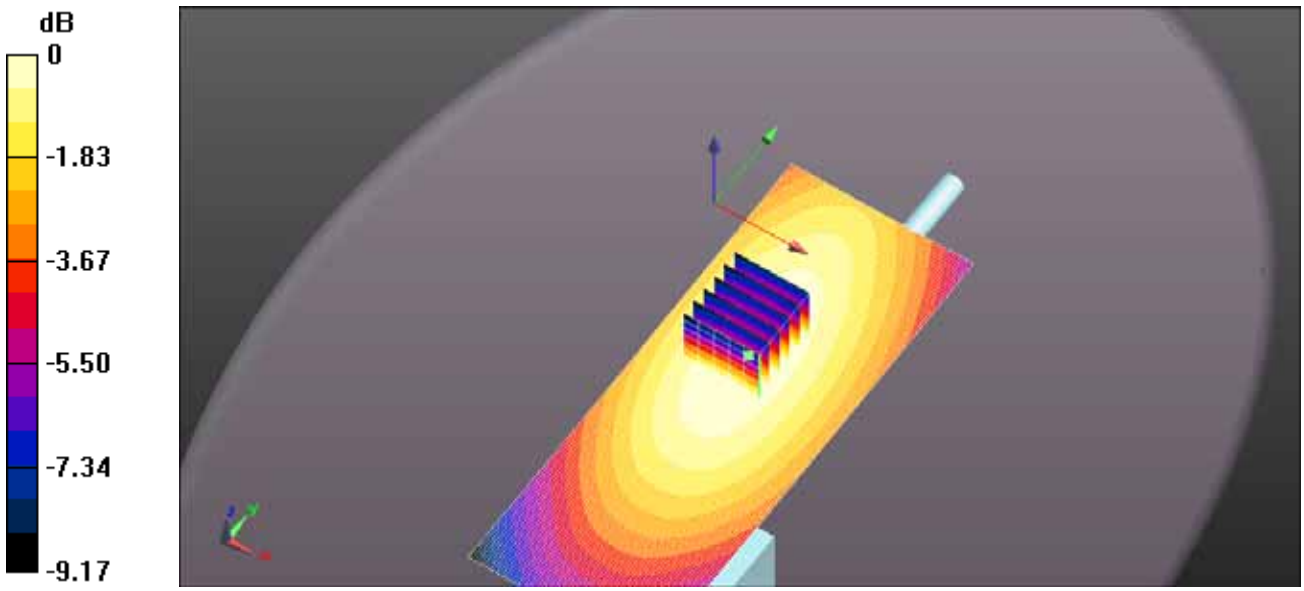

0 dB = 0.350 W/kg = -4.56 dBW/kg

Test Laboratory: Ultratech Group of Labs

File Name: ICOM-458Q FA-B02AR 127.5MHz.da52:0

DUT: IC-F52D; Type: VHF Transceiver; Serial: 00000107

Communication System: UID 0, CW (0); Frequency: 127.5 MHz; Duty Cycle: 1:1
Medium parameters used: f = 128 MHz; σ = 0.713 S/m; ε_r = 53.253; ρ = 1000 kg/m^3 ; Phantom section: Flat Section ; Measurement Standard: DASY5 (IEEE/IEC/ANSI C63.19-2007)

DASY Configuration:

- Probe: EX3DV4 - SN3673; ConvF(11.15, 11.15, 11.15); Calibrated: 3/20/2017;
- Sensor-Surface: 3mm (Mechanical Surface Detection)
- Electronics: DAE4 Sn874; Calibrated: 8/22/2016
- Phantom: ELI 4.0; Type: QD OVA 001 BB; Serial: 1057
- DASY52 52.8.8(1222); SEMCAD X 14.6.10(7331)

Configuration_Head_IC-A25N/Head Front, P=5W, d=25mm/Area Scan (61x161x1):

Interpolated grid: dx=1.500 mm, dy=1.500 mm
Maximum value of SAR (interpolated) = 0.630 W/kg

Configuration_Head_IC-A25N/Head Front, P=5W, d=25mm/Zoom Scan (5x5x7) (6x6x7)/Cube 0:

Measurement grid: dx=7.5mm, dy=7.5mm, dz=5mm
Reference Value = 19.33 V/m; Power Drift = -0.11 dB
Peak SAR (extrapolated) = 0.722 W/kg
SAR(1 g) = 0.571 W/kg; SAR(10 g) = 0.456 W/kg (SAR corrected for target medium)
Maximum value of SAR (measured) = 0.621 W/kg

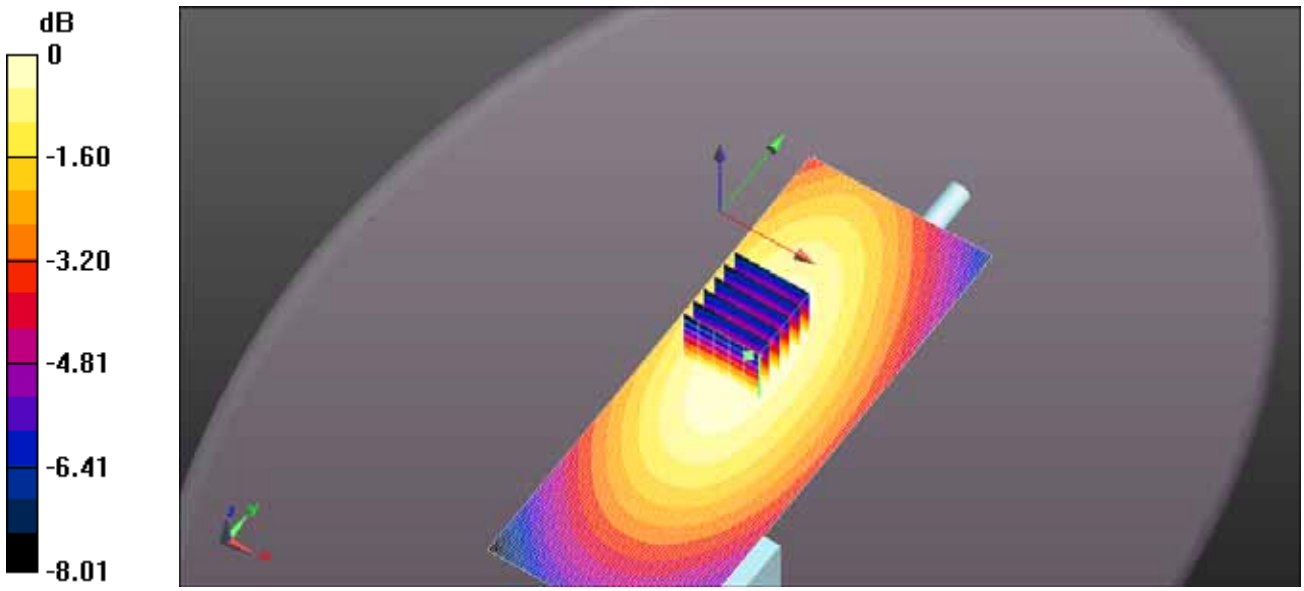

0 dB = 0.630 W/kg = -2.01 dBW/kg

Test Laboratory: Ultratech Group of Labs

File Name: ICOM-458Q FA-B02AR 132.25MHz.da52:0

DUT: IC-F52D; Type: VHF Transceiver; Serial: 00000107

Communication System: UID 0, CW (0); Frequency: 132.25 MHz; Duty Cycle: 1:1
Medium parameters used (interpolated): f = 132.25 MHz; σ = 0.716 S/m; ε_r = 52.849; ρ = 1000 kg/m^3 ;
Phantom section: Flat Section ; Measurement Standard: DASY5 (IEEE/IEC/ANSI C63.19-2007)

DASY Configuration:

- Probe: EX3DV4 - SN3673; ConvF(11.15, 11.15, 11.15); Calibrated: 3/20/2017;
- Sensor-Surface: 3mm (Mechanical Surface Detection)
- Electronics: DAE4 Sn874; Calibrated: 8/22/2016
- Phantom: ELI 4.0; Type: QD OVA 001 BB; Serial: 1057
- DASY52 52.8.8(1222); SEMCAD X 14.6.10(7331)

Configuration_Head_IC-A25N/Head Front, P=5W, d=25mm/Area Scan (61x161x1):

Interpolated grid: dx=1.500 mm, dy=1.500 mm
Maximum value of SAR (interpolated) = 1.20 W/kg

Configuration_Head_IC-A25N/Head Front, P=5W, d=25mm/Zoom Scan (5x5x7) (6x6x7)/Cube 0:

Measurement grid: dx=7.5mm, dy=7.5mm, dz=5mm
Reference Value = 24.79 V/m; Power Drift = -0.11 dB
Peak SAR (extrapolated) = 1.36 W/kg
SAR(1 g) = 1.07 W/kg; SAR(10 g) = 0.852 W/kg (SAR corrected for target medium)
Maximum value of SAR (measured) = 1.17 W/kg

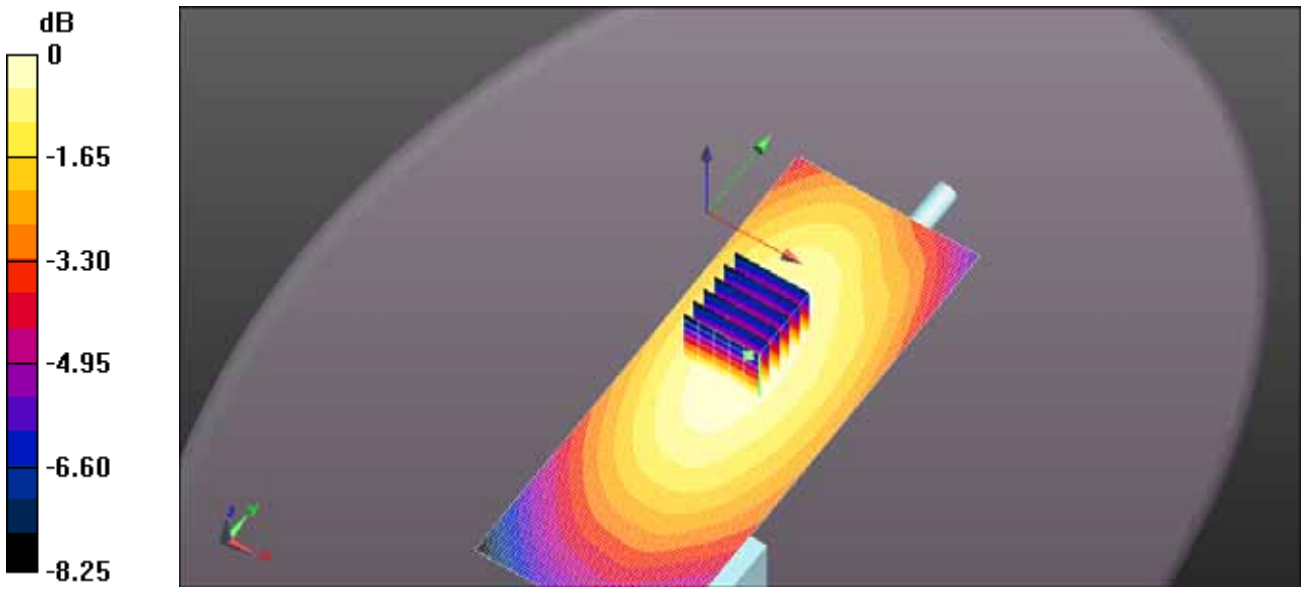

0 dB = 1.20 W/kg = 0.79 dBW/kg

Test Laboratory: Ultratech Group of Labs

File Name: ICOM-458Q FA-B02AR 137MHz.da52:0

DUT: IC-F52D; Type: VHF Transceiver; Serial: 00000107

Communication System: UID 0, CW (0); Frequency: 137 MHz; Duty Cycle: 1:1
Medium parameters used (interpolated): f = 137 MHz; σ = 0.723 S/m; ε_r = 52.183; ρ = 1000 kg/m^3 ;
Phantom section: Flat Section ; Measurement Standard: DASY5 (IEEE/IEC/ANSI C63.19-2007)

DASY Configuration:

- Probe: EX3DV4 - SN3673; ConvF(11.15, 11.15, 11.15); Calibrated: 3/20/2017;
- Sensor-Surface: 3mm (Mechanical Surface Detection)
- Electronics: DAE4 Sn874; Calibrated: 8/22/2016
- Phantom: ELI 4.0; Type: QD OVA 001 BB; Serial: 1057
- DASY52 52.8.8(1222); SEMCAD X 14.6.10(7331)

Configuration_Head_IC-A25N/Head Front, P=5W, d=25mm/Area Scan (61x161x1):

Interpolated grid: dx=1.500 mm, dy=1.500 mm
Maximum value of SAR (interpolated) = 0.925 W/kg

Configuration_Head_IC-A25N/Head Front, P=5W, d=25mm/Zoom Scan (5x5x7) (6x6x7)/Cube 0:

Measurement grid: dx=7.5mm, dy=7.5mm, dz=5mm
Reference Value = 21.32 V/m; Power Drift = -0.13 dB
Peak SAR (extrapolated) = 1.04 W/kg
SAR(1 g) = 0.816 W/kg; SAR(10 g) = 0.648 W/kg (SAR corrected for target medium)
Maximum value of SAR (measured) = 0.887 W/kg

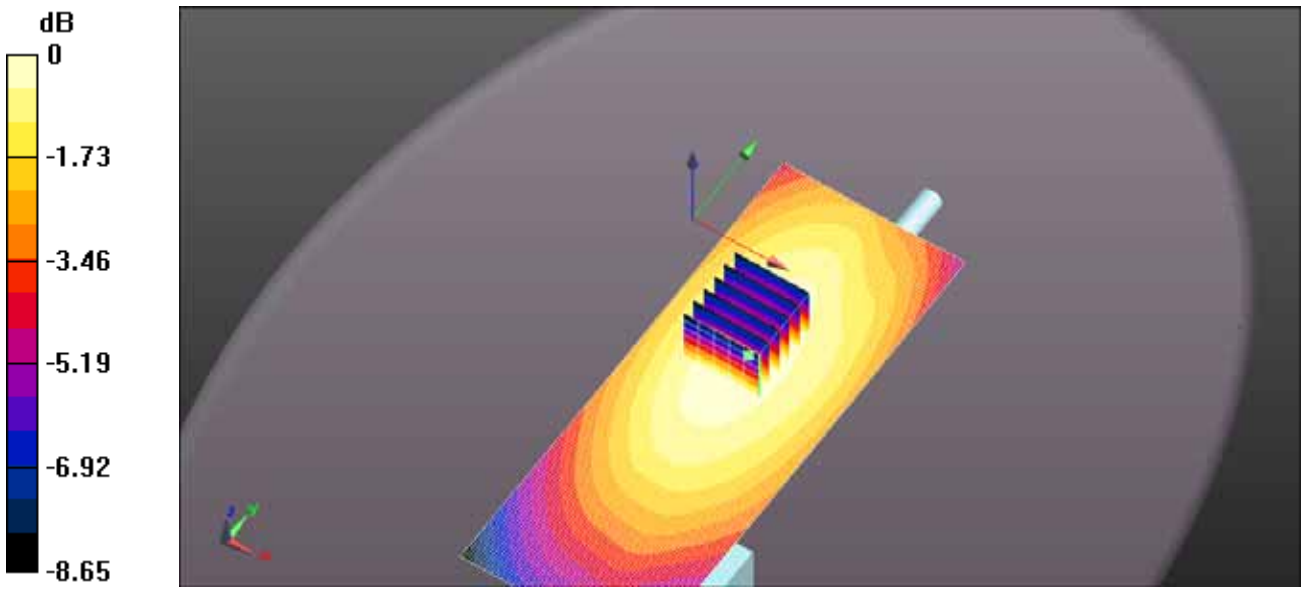

0 dB = 0.925 W/kg = -0.34 dBW/kg

EXHIBIT 4. BODY MEASUREMENTS

File Name: ICOM-458Q FA-B02AR 118MHz.da52:0

DUT: IC-A25N; Type: VHF Transceiver; Serial: 00000107

Communication System: UID 0, CW (0); Frequency: 118 MHz; Duty Cycle: 1:1
Medium parameters used (extrapolated): f = 118 MHz; σ = 0.793 S/m; ε_r = 60.167; ρ = 1000 kg/m^3 ;
Phantom section: Flat Section ; Measurement Standard: DASY5 (IEEE/IEC/ANSI C63.19-2007)

DASY Configuration:

- Probe: EX3DV4 - SN3673; ConvF(10.93, 10.93, 10.93); Calibrated: 3/20/2017;
- Sensor-Surface: 3mm (Mechanical Surface Detection)
- Electronics: DAE4 Sn874; Calibrated: 8/22/2016
- Phantom: ELI 4.0; Type: QD OVA 001 BB; Serial: 1057
- DASY52 52.8.8(1222); SEMCAD X 14.6.10(7331)

Configuration_Body_IC-A25N/Body Back, P=5W, d=0mm/Area Scan (61x161x1):

Interpolated grid: dx=1.500 mm, dy=1.500 mm
Maximum value of SAR (interpolated) = 0.386 W/kg

Configuration_Body_IC-A25N/Body Back, P=5W, d=0mm/Zoom Scan (5x5x7) (6x6x7)/Cube 0:

Measurement grid: dx=7.5mm, dy=7.5mm, dz=5mm
Reference Value = 10.04 V/m; Power Drift = -0.13 dB
Peak SAR (extrapolated) = 0.440 W/kg
SAR(1 g) = 0.339 W/kg; SAR(10 g) = 0.263 W/kg (SAR corrected for target medium)
Maximum value of SAR (measured) = 0.372 W/kg

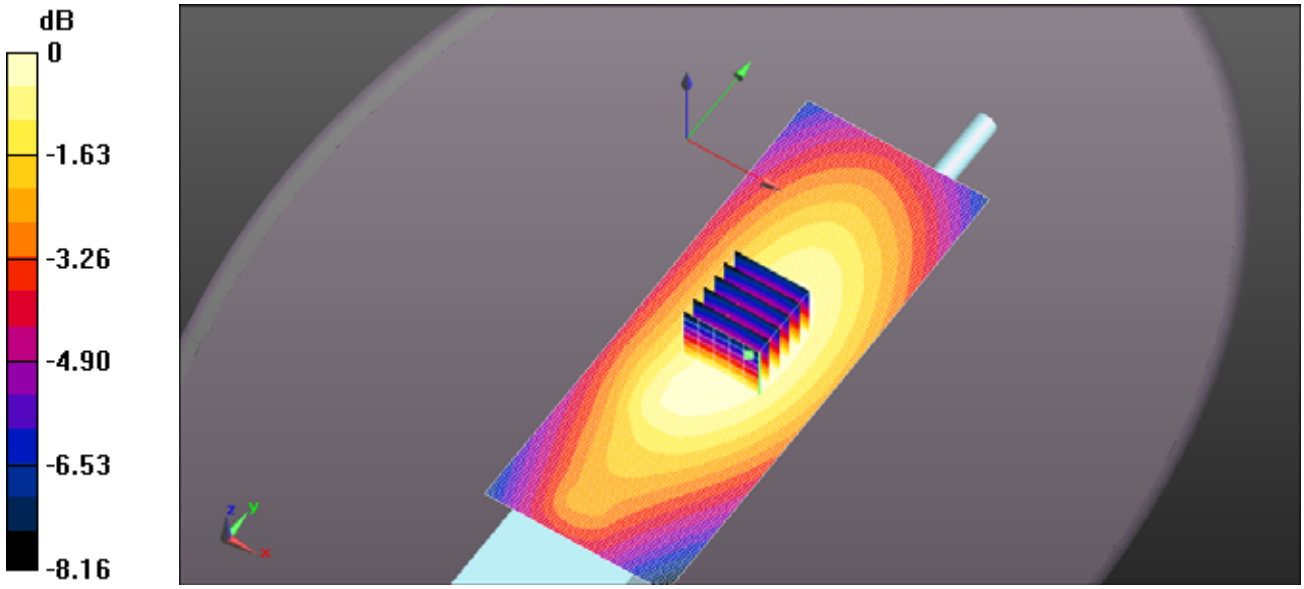

0 dB = 0.386 W/kg = -4.14 dBW/kg

Test Laboratory: Ultratech Group of Labs

File Name: ICOM-458Q FA-B02AR 122.75MHz.da52:0

DUT: IC-A25N; Type: VHF Transceiver; Serial: 00000107

Communication System: UID 0, CW (0); Frequency: 122.75 MHz; Duty Cycle: 1:1
Medium parameters used (interpolated): f = 122.75 MHz; σ = 0.791 S/m; ε_r = 60.658; ρ = 1000 kg/m^3 ;
Phantom section: Flat Section ; Measurement Standard: DASY5 (IEEE/IEC/ANSI C63.19-2007)

DASY Configuration:

- Probe: EX3DV4 - SN3673; ConvF(10.93, 10.93, 10.93); Calibrated: 3/20/2017;
- Sensor-Surface: 3mm (Mechanical Surface Detection)
- Electronics: DAE4 Sn874; Calibrated: 8/22/2016
- Phantom: ELI 4.0; Type: QD OVA 001 BB; Serial: 1057
- DASY52 52.8.8(1222); SEMCAD X 14.6.10(7331)

Configuration_Body_IC-A25N/Body Back, P=5W, d=0mm/Area Scan (61x161x1):

Interpolated grid: dx=1.500 mm, dy=1.500 mm
Maximum value of SAR (interpolated) = 0.489 W/kg

Configuration_Body_IC-A25N/Body Back, P=5W, d=0mm/Zoom Scan (5x5x7) (6x6x7)/Cube 0:

Measurement grid: dx=7.5mm, dy=7.5mm, dz=5mm
Reference Value = 12.52 V/m; Power Drift = -0.10 dB
Peak SAR (extrapolated) = 0.563 W/kg
SAR(1 g) = 0.434 W/kg; SAR(10 g) = 0.337 W/kg (SAR corrected for target medium)
Maximum value of SAR (measured) = 0.477 W/kg

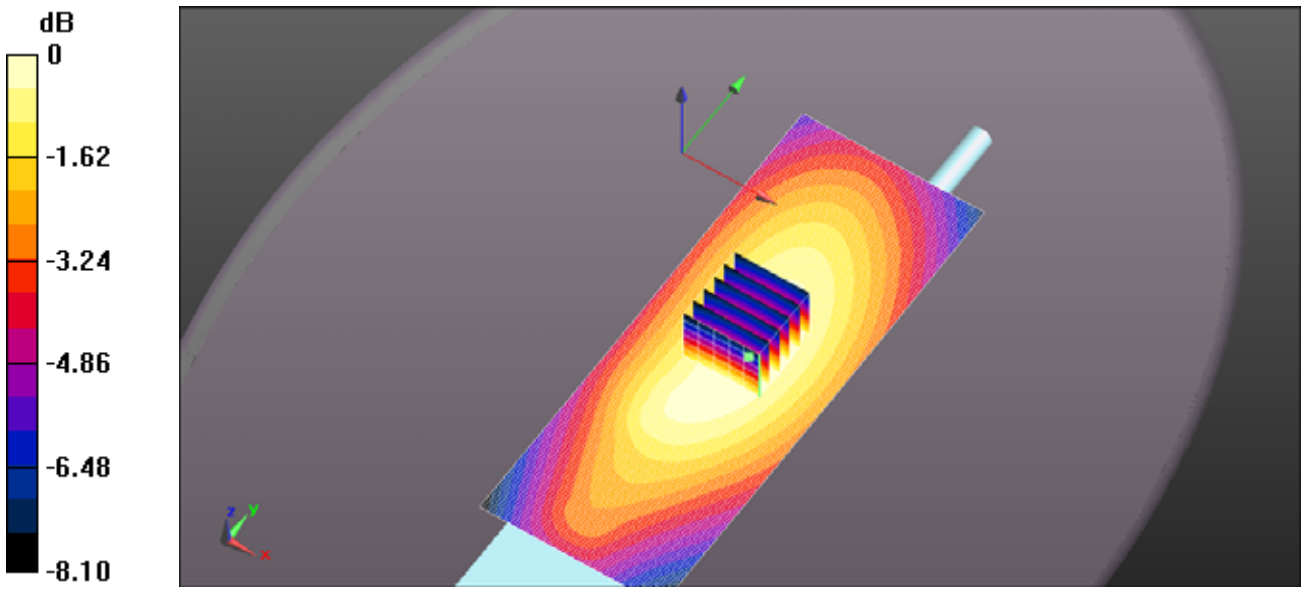

0 dB = 0.489 W/kg = -3.11 dBW/kg

Test Laboratory: Ultratech Group of Labs

File Name: ICOM-458Q FA-B02AR 127.5MHz MB-133.da52:0

DUT: IC-A25N; Type: VHF Transceiver; Serial: 00000107

Communication System: UID 0, CW (0); Frequency: 127.5 MHz; Duty Cycle: 1:1
Medium parameters used: f = 128 MHz; σ = 0.792 S/m; ε_r = 60.879; ρ = 1000 kg/m^3 ; Phantom section: Flat Section ; Measurement Standard: DASY5 (IEEE/IEC/ANSI C63.19-2007)

DASY Configuration:

- Probe: EX3DV4 - SN3673; ConvF(10.93, 10.93, 10.93); Calibrated: 3/20/2017;
- Sensor-Surface: 3mm (Mechanical Surface Detection)
- Electronics: DAE4 Sn874; Calibrated: 8/22/2016
- Phantom: ELI 4.0; Type: QD OVA 001 BB; Serial: 1057
- DASY52 52.8.8(1222); SEMCAD X 14.6.10(7331)

Configuration_Body_IC-A25N/Body Back, P=5W, d=0mm/Area Scan (61x161x1):

Interpolated grid: dx=1.500 mm, dy=1.500 mm
Maximum value of SAR (interpolated) = 0.706 W/kg

Configuration_Body_IC-A25N/Body Back, P=5W, d=0mm/Zoom Scan (5x5x7) (6x6x7)/Cube 0:

Measurement grid: dx=7.5mm, dy=7.5mm, dz=5mm
Reference Value = 11.67 V/m; Power Drift = -0.14 dB
Peak SAR (extrapolated) = 0.831 W/kg
SAR(1 g) = 0.637 W/kg; SAR(10 g) = 0.493 W/kg (SAR corrected for target medium)
Maximum value of SAR (measured) = 0.698 W/kg

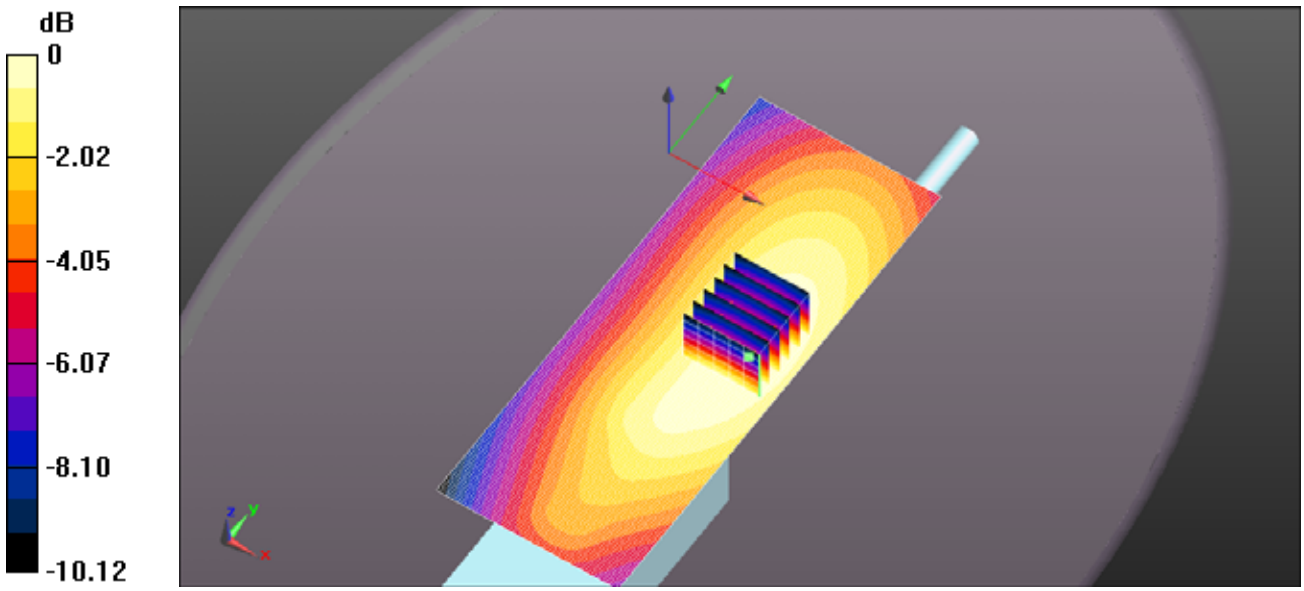

0 dB = 0.706 W/kg = -1.51 dBW/kg

Test Laboratory: Ultratech Group of Labs

File Name: ICOM-458Q FA-B02AR 132.25MHz.da52:0

DUT: IC-A25N; Type: VHF Transceiver; Serial: 00000107

Communication System: UID 0, CW (0); Frequency: 132.25 MHz; Duty Cycle: 1:1
Medium parameters used (interpolated): f = 132.25 MHz; σ = 0.789 S/m; ε_r = 60.945; ρ = 1000 kg/m^3 ;
Phantom section: Flat Section ; Measurement Standard: DASY5 (IEEE/IEC/ANSI C63.19-2007)

DASY Configuration:

- Probe: EX3DV4 - SN3673; ConvF(10.93, 10.93, 10.93); Calibrated: 3/20/2017;
- Sensor-Surface: 3mm (Mechanical Surface Detection)
- Electronics: DAE4 Sn874; Calibrated: 8/22/2016
- Phantom: ELI 4.0; Type: QD OVA 001 BB; Serial: 1057
- DASY52 52.8.8(1222); SEMCAD X 14.6.10(7331)

Configuration_Body_IC-A25N/Body Back, P=5W, d=0mm/Area Scan (61x161x1):

Interpolated grid: dx=1.500 mm, dy=1.500 mm
Maximum value of SAR (interpolated) = 0.632 W/kg

Configuration_Body_IC-A25N/Body Back, P=5W, d=0mm/Zoom Scan (5x5x7) (6x6x7)/Cube 0:

Measurement grid: dx=7.5mm, dy=7.5mm, dz=5mm
Reference Value = 14.06 V/m; Power Drift = -0.17 dB
Peak SAR (extrapolated) = 0.738 W/kg
SAR(1 g) = 0.565 W/kg; SAR(10 g) = 0.437 W/kg (SAR corrected for target medium)
Maximum value of SAR (measured) = 0.622 W/kg

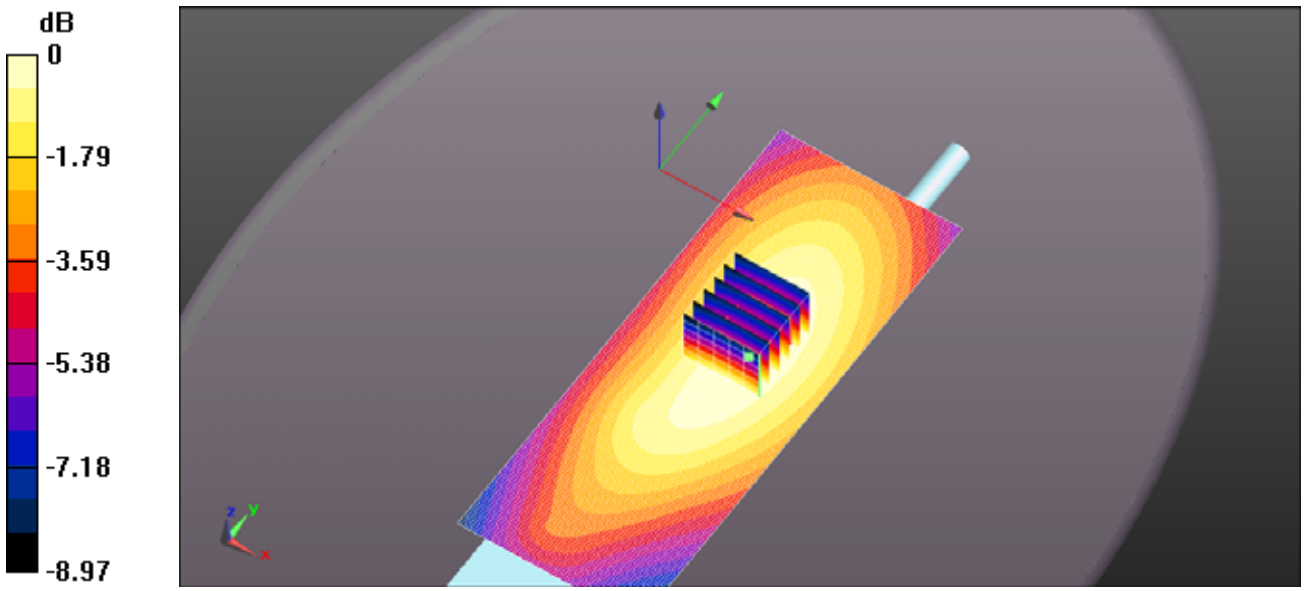

0 dB = 0.632 W/kg = -2.00 dBW/kg

Test Laboratory: Ultratech Group of Labs

File Name: ICOM-458Q FA-B02AR 137MHz.da52:0

DUT: IC-A25N; Type: VHF Transceiver; Serial: 00000107

Communication System: UID 0, CW (0); Frequency: 137 MHz; Duty Cycle: 1:1
Medium parameters used (interpolated): f = 137 MHz; σ = 0.786 S/m; ε_r = 61.456; ρ = 1000 kg/m^3 ;
Phantom section: Flat Section ; Measurement Standard: DASY5 (IEEE/IEC/ANSI C63.19-2007)

DASY Configuration:

- Probe: EX3DV4 - SN3673; ConvF(10.93, 10.93, 10.93); Calibrated: 3/20/2017;
- Sensor-Surface: 3mm (Mechanical Surface Detection)
- Electronics: DAE4 Sn874; Calibrated: 8/22/2016
- Phantom: ELI 4.0; Type: QD OVA 001 BB; Serial: 1057
- DASY52 52.8.8(1222); SEMCAD X 14.6.10(7331)

Configuration_Body_IC-A25N/Body Back, P=5W, d=0mm/Area Scan (61x161x1):

Interpolated grid: dx=1.500 mm, dy=1.500 mm
Maximum value of SAR (interpolated) = 0.150 W/kg

Configuration_Body_IC-A25N/Body Back, P=5W, d=0mm/Zoom Scan (5x5x7) (6x6x7)/Cube 0:

Measurement grid: dx=7.5mm, dy=7.5mm, dz=5mm
Reference Value = 5.683 V/m; Power Drift = -0.01 dB
Peak SAR (extrapolated) = 0.178 W/kg
SAR(1 g) = 0.136 W/kg; SAR(10 g) = 0.104 W/kg (SAR corrected for target medium)
Maximum value of SAR (measured) = 0.150 W/kg

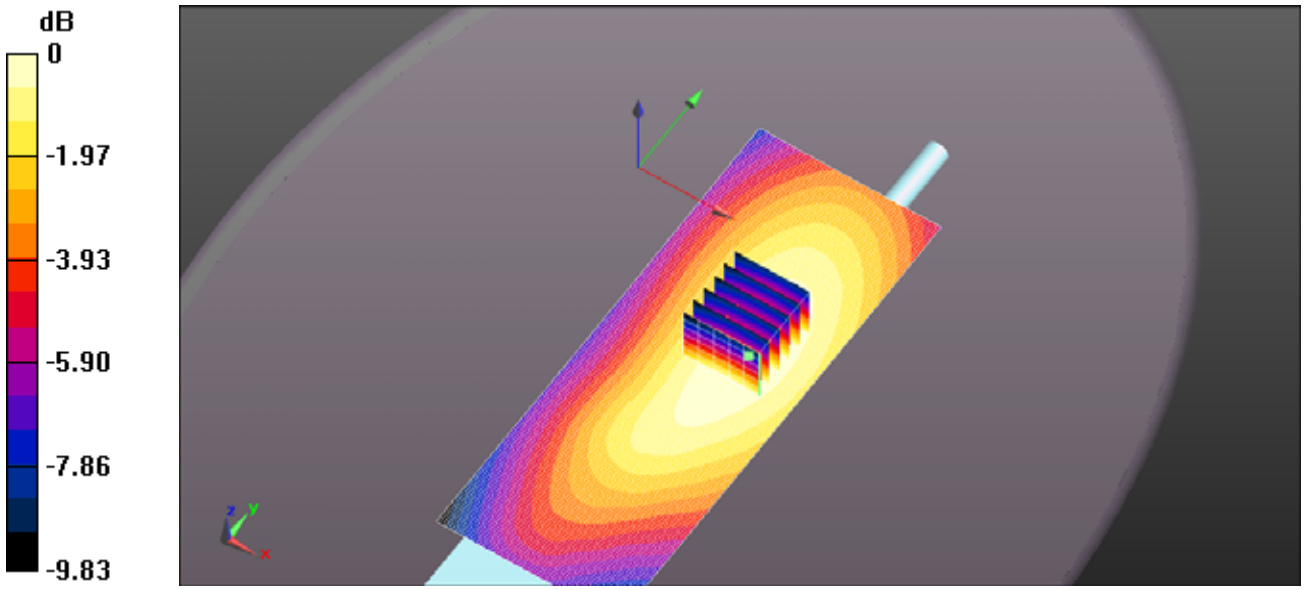

0 dB = 0.150 W/kg = -8.24 dBW/kg